DATA SHEET

10 GBPS 1310NM PIN + PREAMP SC AND LC ROSA PACKAGE

PIN-1310-10LR-SC

FEATURES:

- SC ROSA PIN-1310-10LR-SC includes flex circuit
- High performance InGaAs PIN photodiode with separate transimpedance amplifier
- Low electrical parasitic TO46 package
- Data rates up to 11.3Gbps
- Separate PD supply for power monitoring
- Low bias currents and voltages
- Low power dissipation
- IEEE 10G-BASE-LR applications

The PIN-1310-10LR-SC uses a high-performance InGaAs PIN photo-detector packaged with a transimpedance amplifier designed to meet performance requirements for data rates up to 11.3Gbps data communication over singlemode and multi-mode optical fiber at 1310nm. Applications include Ethernet, Fiber Channel and ATM protocols. The optical assembly is designed to interface to single mode optical fiber.

The PIN-1310-10LR-SC is designed to be paired with AOC FP and DFB TOSA products (see data sheets for FP-1310 and DFB-1310 and products).



Part Number	Description
PIN-1310-10LR-SC	5 pin SC ROSA, with separate PD bias, with flex circuit

Finisar
Advanced Optical Components Division

ABSOLUTE MAXIMUM RATINGS

Parameter	Rating
Storage Temperature	-40 to +85°C
Case Operating Temperature	-10 to +85°C
Lead Solder Temperature	260°C, 10 sec.
Power Supply Voltage	-0.5V to 4V
Incident Optical Power	+3 dBm average, +5 dBm peak
Storage Temperature	-40 to +85°C



Notice

Stresses greater than those listed under "Absolute Maximum Ratings" may cause permanent damage to the device. This is a stress rating only and functional operation of the device at these or any other conditions above those indicated in the operations section for extended periods of time may affect reliability.

Notice

The inherent design of this component causes it to be sensitive to electrostatic discharge (ESD). To prevent ESD-induced damage and/or degradation to equipment, take normal ESD precautions when handling this product

ELECTRO-OPTICAL CHARACTERISTICS

3.0V<Vcc<3.6V, AC coupled to 50Ω (100Ωdifferential), -10°C<T<85°C unless otherwise specified, with flex circuit

VCSEL Parameters	Test Condition	Symbol	Min.	Typ.	Max.	Units	Notes
Data Rate		DR	0.1		11.3	Gbps	
Supply Voltage			3.0	3.3	3.6	V	
Supply Current	P_R =0µW, R_L=50ΩAC coupled	I_{CC}		35	60	mA	1
Optical Return Loss	P_R =-12dBm	ORL	12			dB	1
Input Optical Wavelength		λ_P	1260		1620	nm	
PD Responsivity	λ = 1310nm	Resp	0.8	0.85		A/W	1
PD Bias		V_{PD}	3.0	3.3	3.6		
Maximum Average Input Power before Overload		P_{MAX}	+1	+3		dBm	
Differential Output Voltage Swing	$P_{R,OMA}$= -12Bm, AC Coupled to R_L=50Ω	$V_{o(pk-pk)}$	100		600	mV	1,2
Differential Responsivity	$P_{R,OMA}$ = -12dBm, AC Coupled to R_L=50Ω	T	3000			V/W	1,2
-3dB Optical/Electrical Bandwidth	T_A = 25°C	BW	7.5			GHz	1,2,3
Low Frequency –3dB Cutoff		BW_{LF}			30	KHz	1,2,3
Output Impedance		Z_{OUT}	40	50	60	Ω	
Output Return Loss	R_0=50Ω, DC 10≤GHZ	S_{22}			-7	dB	
Sensitivity	DR = 10.3125Gbps	S			-16.5	dBm	4
Stressed Sensitivity	Circadiant Test	S_{STRESS}			-12	dBm	4
Rise/Fall Time	$P_{R,OMA}$ =-12dBm, (20%-80%),	T_R/T_F			45	ps	2,5
Differential Power Supply Rejection Ratio	P_R =0µW (Dark), 5MHz<F<2GHz	PSRR	20			dB	1,6
Group Delay	$P_{R,OMA}$ = -12dBm, AC Coupled to R_L=50Ω 2MHz<F<6GHz	Delay	-50		50	ps	7

NOTES:

1. P_R is the average optical power at the fiber face.
2. $P_{R,OMA}$ is the peak to peak optical power at the fiber face (Optical Modulation Amplitude)

$$P_{R,OMA} \equiv \frac{2P_R(ER-1)}{ER+1}$$ where ER is the extinction ratio (linear) of the optical source.

3. Bandwidth and Low Frequency Cutoff are measured with a small signal sinusoidal light source with –10dBm average power
4. Sensitivity is measured with an optical source with an extinction ratio of 6dB. For sensitivity measurements at 10.3125, 10.51875, 10.70923, 11.09573, 11.31764 Gb/s, PRBS 2^31-1, ER=6dB, BER < $10^{-12}$and with limiting of the TIA is assumed to be implemented at the front end of the post amplifier. Stress testing is done using a Circadiant test system
5. Rise/Fall times are corrected for optical source Rise/Fall times. $T_{TIA}^2 = T_{MEASURED}^2 - T_{OPTICAL}^2$
6. Value shown is with no external power supply filtering.
7. Group delay is a sensitive measurement to package interface, and includes the effects of PD, TIA and package. Measurement is made with TO leads as short as possible.
8. DJ_{TIA} is specified as contributed DJ by the TIA, obtained from $DJ_{TIA}^2 = DJ_{TOTAL}^2 - DJ_{OPTICAL}^2$
9. RJ_{TIA} is specified as contributed RJby the TIA, obtained from $RJ_{TIA}^2 = RJ_{TOTAL}^2 - RJ_{OPTICAL}^2$
10. The electrical performance of the ROSA is dependent upon the quality of the electrical connection between the TO can and the circuit board. AOC cannot guarantee all performance specifications for parts without the flex circuit attached.

PINOUT:

PIN	Description
1	Vcc
2	CASE
3	OUTP
4	OUTN
5	CASE
6	V_{PD}

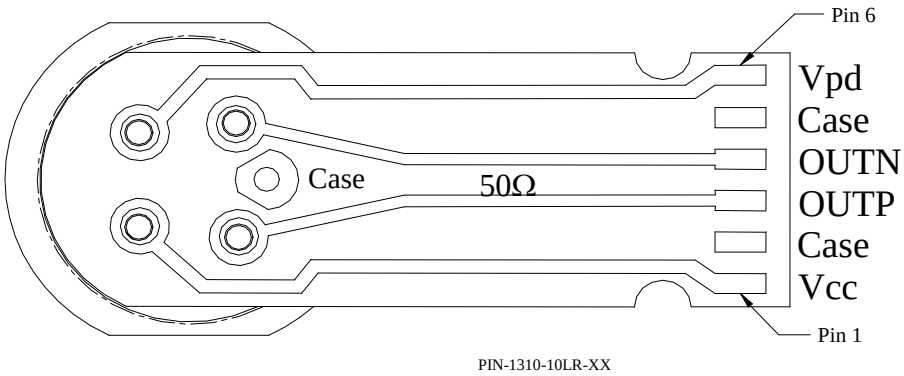

INTERFACE EXAMPLE

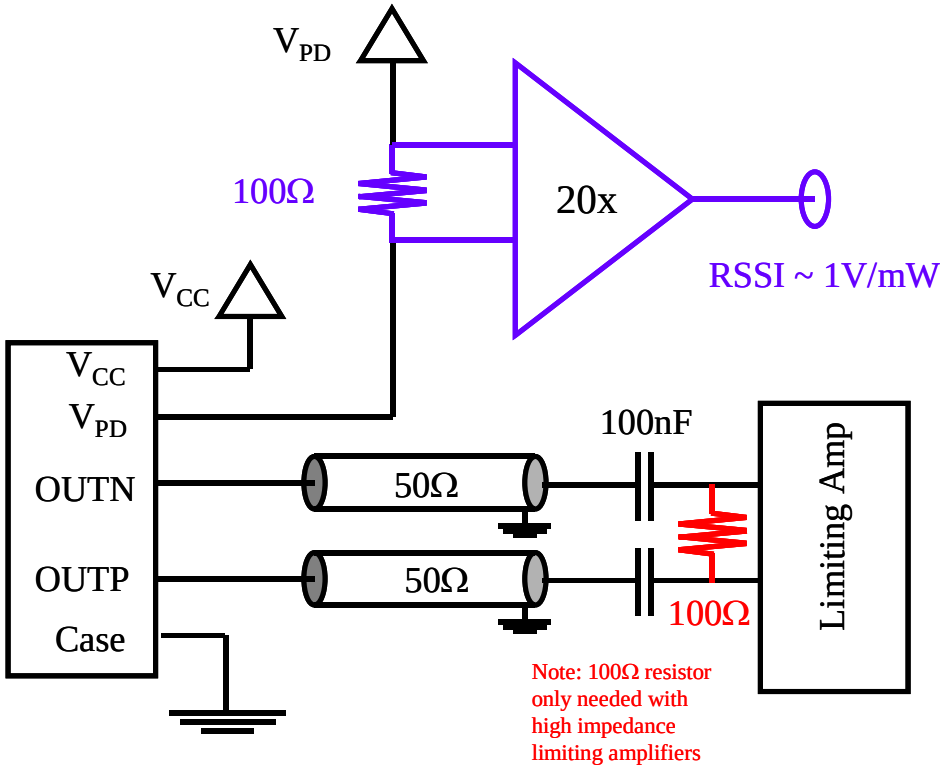

Optional 100Ω differential termination for high impedance limiting amplifiers is shown in red.

RECOMMENDED BIAS NETWORK

Note, better performance will be obtained if a ferrite bead is used in place of the inductor.

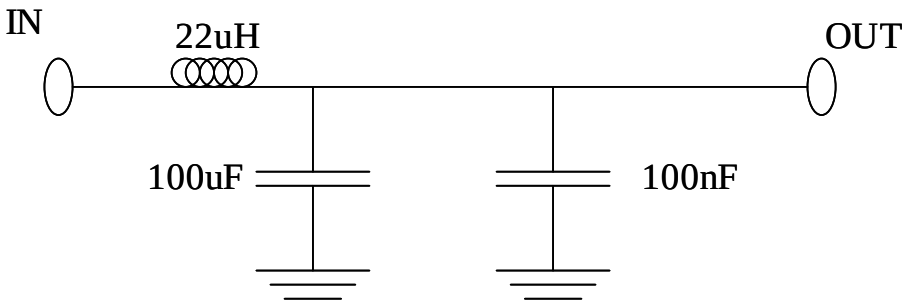

MECHANICAL DIMENSIONS (mm)

PIN-1310-LR-SC

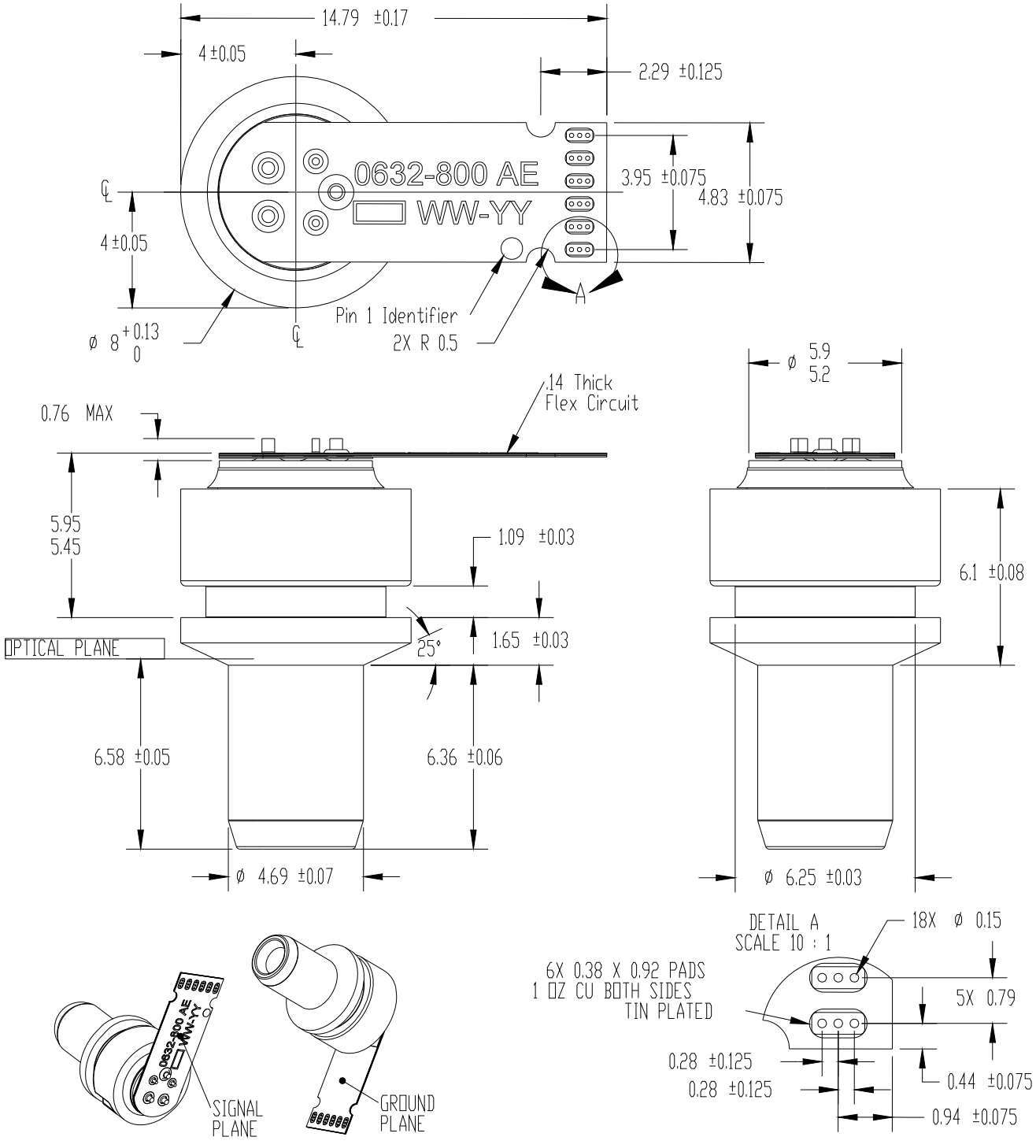

ADVANCED OPTICAL COMPONENTS

Finisar's ADVANCED OPTICAL COMPONENTS division was formed through strategic acquisition of key optical component suppliers. The company has led the industry in high volume Vertical Cavity Surface Emitting Laser (VCSEL) and associated detector technology since 1996. VCSELs have become the primary laser source for optical data communication, and are rapidly expanding into a wide variety of sensor applications. VCSELs' superior reliability, low drive current, high coupled power, narrow and circularly symmetric beam and versatile packaging options (including arrays) are enabling solutions not possible with other optical technologies. ADVANCED OPTICAL COMPONENTS is also a key supplier of Fabrey-Perot (FP) and Distributed Feedback (DFB) Lasers, and Optical Isolators (OI) for use in single mode fiber data and telecommunications networks

LOCATION

- Allen, TX - Business unit headquarters, VCSEL wafer growth, wafer fabrication and TO package assembly.
- Fremont, CA – Wafer growth and fabrication of 1310 to 1550nm FP and DFB lasers.
- Shanghai, PRC – Optical passives assembly, including optical isolators and splitters.

SALES AND SERVICE

Finisar's ADVANCED OPTICAL COMPONENTS division serves its customers through a worldwide network of sales offices and distributors. For application assistance, current specifications, pricing or name of the nearest Authorized Distributor, contact a nearby sales office or call the number listed below.

AOC CAPABILITIES

ADVANCED OPTICAL COMPONENTS' advanced capabilities include:

- 1, 2, 4, 8, and 10Gbps serial VCSEL solutions
- 1, 2, 4, 8, and 10Gbps serial SW DETECTOR solutions VCSEL and detector arrays
- 1, 2, 4, 8, and 10Gbps FP and DFB solutions at 1310 and 1550nm
- 1, 2, 4, 8, and 10Gbps serial LW DETECTOR solutions
- Optical Isolators from 1260 to 1600nm range
- Laser packaging in TO46, TO56, and Optical subassemblies with SC, LC, and MU interfaces for communication networks
- VCSELs operating at 670nm, 780nm, 980nm, and 1310nm in development
- Sensor packages include surface mount, various plastics, chip on board, chipscale packages, etc. Custom packaging options

Finisar
Advanced Optical Components Division

Phone: 1-866-MY-VCSEL USA (toll free)
1-214-509-2700 USA (Direct dial)
44 (0) 174 336 5533 Europe
886-935-409898 China & Taiwan
81-90-4437-1130 Japan
82-11-220-6153 Asia Pacific & Korea

Fax: 1-2140509-3709 USA

Email: support@adopco.com
WEB: www.finisar.com/aoc.php

©2008 Finisar Corporation. All rights reserved. Finisar is a registered trademark of Finisar Corporation. Features and specifications are subject to change without notice.