250W Isolated Dual Output with PFC Function

PID-250

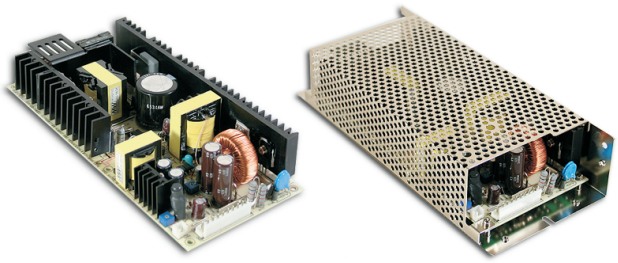

Features :

- Universal AC input / Full range
- **Optional L-Bracket and cover**
- Isolated output & GND for CH1,CH2
- Built-in active PFC function, PF>0.92
- Protections:Short circuit / Overload / Over voltage / Over temperature
- Remote control for CH1
- Peak load 170% for CH1 within 10 sec.
- Cooling by free air convection
- 100% full load burn-in test
- 3 years warranty

SPECIFICATION

MODEL		PID-250A		PID-250B		PID-250C		PID-250D	
OUTPUT	OUTPUT NUMBER	CH1	CH2	CH1	CH2	CH1	CH2	CH1	CH2
	DC VOLTAGE	12V	5V	24V	5V	36V	5V	48V	5V
	RATED CURRENT	15A(Peak 20A)	5A	9.4A(Peak 16.7A)	5A	6.3A(Peak 11.1A)	5A	4.7A(Peak 8.4A)	5A
	CURRENT RANGE Note.6	0 ~ 15A (Peak 20A)	0 ~ 5A	0 ~ 9.4A (Peak 16.7A)	0 ~ 5A	0 ~ 6.3A (Peak 11.1A)	0 ~ 5A	0 ~ 4.7A (Peak 8.4A)	0 ~ 5A
	RATED POWER	205W		250.6W		251.8W		250.6W	
	RIPPLE & NOISE (max.) Note.2	120mVp-p	50mVp-p	150mVp-p	50mVp-p	200mVp-p	50mVp-p	200mVp-p	50mVp-p
	VOLTAGE ADJ. RANGE	10.8 ~ 13.2V	4.75 ~ 5.25V	21.6 ~ 26.4V	4.75 ~ 5.25V	32.4 ~ 39.6V	4.75 ~ 5.25V	43.2 ~ 52.8V	4.75 ~ 5.25V
	VOLTAGE TOLERANCE Note.3	±3.0%	±2.0%	±2.0%	±2.0%	±2.0%	±2.0%	±2.0%	±2.0%
	LINE REGULATION	±0.5%	±0.5%	±0.5%	±0.5%	±0.5%	±0.5%	±0.5%	±0.5%
	LOAD REGULATION	±1.0%	±2.0%	±1.0%	±2.0%	±1.0%	±2.0%	±1.0%	±2.0%
	SETUP, RISE TIME	2500ms, 60ms/115VAC 1200ms, 60ms/230VAC							
	HOLD UP TIME (Typ.)	30ms at full load							
INPUT	VOLTAGE RANGE Note.5	90 ~ 264VAC 127 ~ 370VDC							
	FREQUENCY RANGE	47 ~ 63Hz							
	POWER FACTOR	PF≧0.92/230VAC PF≧0.97/115VAC at full load							
	EFFICIENCY(Typ.)	83%		86%		86%		86%	
	AC CURRENT (Typ.)	3A/115VAC 1.5A/230VAC							
	INRUSH CURRENT (Typ.)	COLD START 58A/230VAC							
	LEAKAGE CURRENT	<3.5mA / 240VAC							
PROTECTION	OVERLOAD	CH1: 105 ~ 170% rated output power Normally work within 10 sec and then shut down, re-power on to recover Over 180% rated power or short circuit, constant current limiting within 10 sec and then shut down, re-power on to recover							
		CH2: 101 ~ 150% rated output power Protection type : Hiccup mode, recovers automatically after fault condition is removed							
	OVER VOLTAGE	13.8 ~ 16.2V	5.5 ~ 6.75V	27.6 ~ 32.4V	5.5 ~ 6.75V	40 ~ 48V	5.5~ 6.75V	54 ~ 64.8V	5.5 ~ 6.75V
		Protection type : Shut down o/p voltage, re-power on to recover for CH1 ; Hiccup mode, recovers automatically afer fault condition is removed for CH2(by zener diode clamp)							
	OVER TEMPERATURE	105℃ ±5℃ detect on heatsink of power transistors							
		Protection type : Shut down o/p voltage(CH1), recovers automatically after temperature goes down							
FUNCTION	REMOTE CONTROL	CN52 : Open=CH1 & CH2 power on ; Short = CH1 power off, CH2 power on; when CH2 is malfunction, CH1 will be shut down							
ENVIRONMENT	WORKING TEMP.	-20 ~ +70℃ (Refer to "Derating Curve")							
	WORKING HUMIDITY	20 ~ 90% RH non-condensing							
	STORAGE TEMP., HUMIDITY	-20 ~ +85℃, 10 ~ 95% RH							
	TEMP. COEFFICIENT	±0.05%/℃ (0 ~ 50℃)							
	VIBRATION	10 ~ 500Hz, 2G 10min./1cycle, period for 60min each along X, Y, Z axes							
SAFETY & EMC (Note 4)	SAFETY STANDARDS	UL60950-1, TUV EN60950-1 approved							
	WITHSTAND VOLTAGE	I/P-O/P:3KVAC I/P-FG:1.5KVAC O/P-FG:0.5KVAC							
	ISOLATION RESISTANCE	I/P-O/P, I/P-FG, O/P-FG:100M Ohms / 500VDC / 25℃/ 70% RH							
	EMC EMISSION	Compliance to EN55022 (CISPR22) Class B, EN61000-3-2,-3							
	EMC IMMUNITY	Compliance to EN61000-4-2,3,4,5,6,8,11, EN61000-6-2, heavy industry level, criteria A							
OTHERS	MTBF	150.4Khrs min. MIL-HDBK-217F (25℃)							
	DIMENSION	PCB:222*95*40mm (L*W*H) ; with optional CASE:250*105.4*53mm (L*W*H)							
	PACKING	PCB:0.74Kg; 18pcs/14.3Kg/0.88CUFT ; with optional CASE:1.6Kg; 9pcs/15.4Kg/0.61CUFT							
NOTE	1. All parameters NOT specially mentioned are measured at 230VAC input, rated load and 25℃ of ambient temperature. 2. Ripple & noise are measured at 20MHz of bandwidth by using a 12" twisted pair-wire terminated with a 0.1uf & 47uf parallel capacitor. 3. Tolerance : includes set up tolerance, line regulation and load regulation. 4. The power supply is considered a component which will be installed into a final equipment. The final equipment must be re-confirmed that it still meets EMC directives. For guidance on how to perform these EMC tests, please refer to "EMI testing of component power supplies." (as available on http://www.meanwell.com) 5. Derating may be needed under low input voltage. Please check the derating curve for more details. 6. Peak current should reduce to 150% of rated value if the input voltage <110VAC. 7. Heat Sink HS1,HS2,HS3 can not be shorted.								

■ Mechanical Specification

Unit:mm

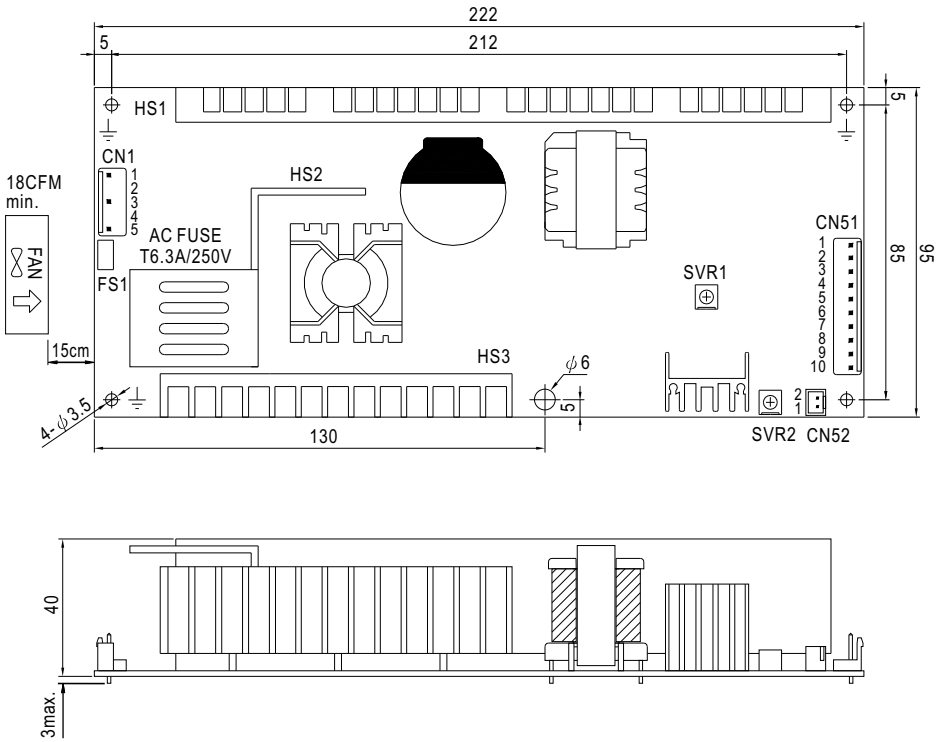

AC Input Connector (CN1) : JST B5P-VH or equivalent

Pin No.	Assignment	Mating Housing	Terminal
1	FG ⏚	JST VHR or equivalent	JST SVH-21T-P1.1 or equivalent
2,4	No Pin		
3	AC/N		
5	AC/L		

DC Output Connector (CN51) : JST B10P-VH or equivalent

Pin No.	Assignment	Mating Housing	Terminal
1,2,3	COM1	JST VHR or equivalent	JST SVH-21T-P1.1 or equivalent
4,5,6	V1		
7,8	COM2		
9,10	V2		

Remote ON/OFF Connector(CN52):JST B2B-XH or equivalent

Pin No.	Status	Mating Housing	Terminal
PIN1,2 (Short)	V1: OFF V2: ON	JST XHP or equivalent	JST SXH-001T-P0.6 or equivalent
PIN1,2 (Open)	V1: ON V2: ON		

SVR1	For CH1
SVR2	For CH2

⚠ HS1,HS2,HS3 can not be shorted

■ Block Diagram

PFC fosc : 100KHz
PWM fosc : 100KHz

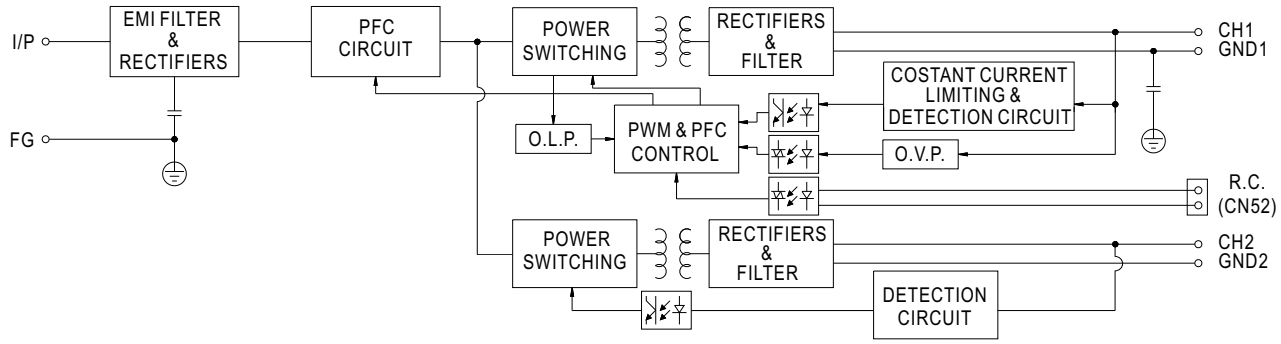

■ Derating Curve

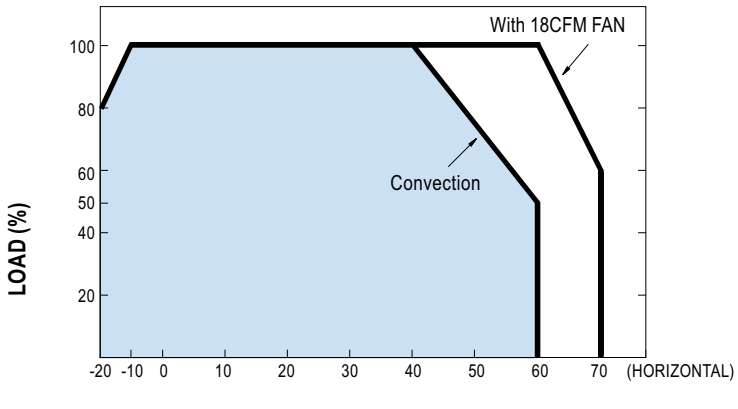

■ Output Derating VS Input Voltage

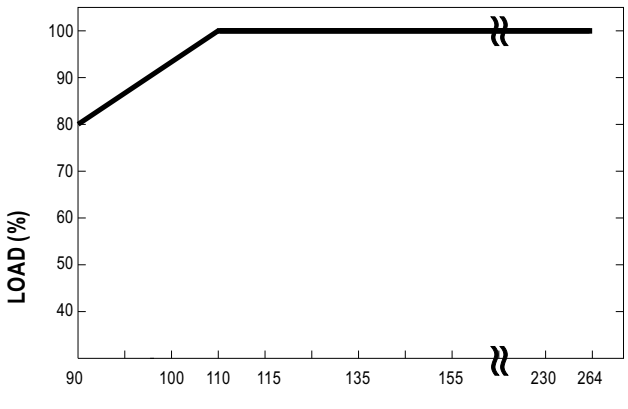

■ Mechanical Specification

Case No.965A Unit:mm

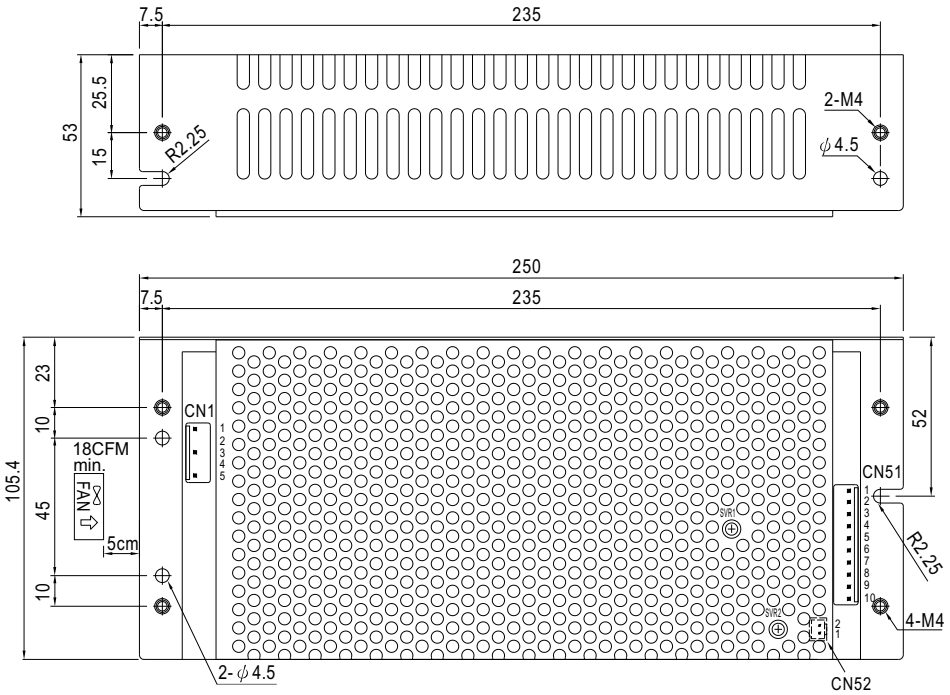

AC Input Connector (CN1) : JST B5P-VH or equivalent

Pin No.	Assignment	Mating Housing	Terminal
1	FG ⏚	JST VHR or equivalent	JST SVH-21T-P1.1 or equivalent
2,4	No Pin		
3	AC/N		
5	AC/L		

DC Output Connector (CN51) : JST B10P-VH or equivalent

Pin No.	Assignment	Mating Housing	Terminal
1,2,3	COM1	JST VHR or equivalent	JST SVH-21T-P1.1 or equivalent
4,5,6	V1		
7,8	COM2		
9,10	V2		

Remote ON/OFF Connector(CN52):JST B2B-XH or equivalent

Pin No.	Status	Mating Housing	Terminal
PIN1,2 (Short)	V1: OFF V2: ON	JST XHP or equivalent	JST SXH-001T-P0.6 or equivalent
PIN1,2 (Open)	V1: ON V2: ON		

SVR1	For CH1
SVR2	For CH2

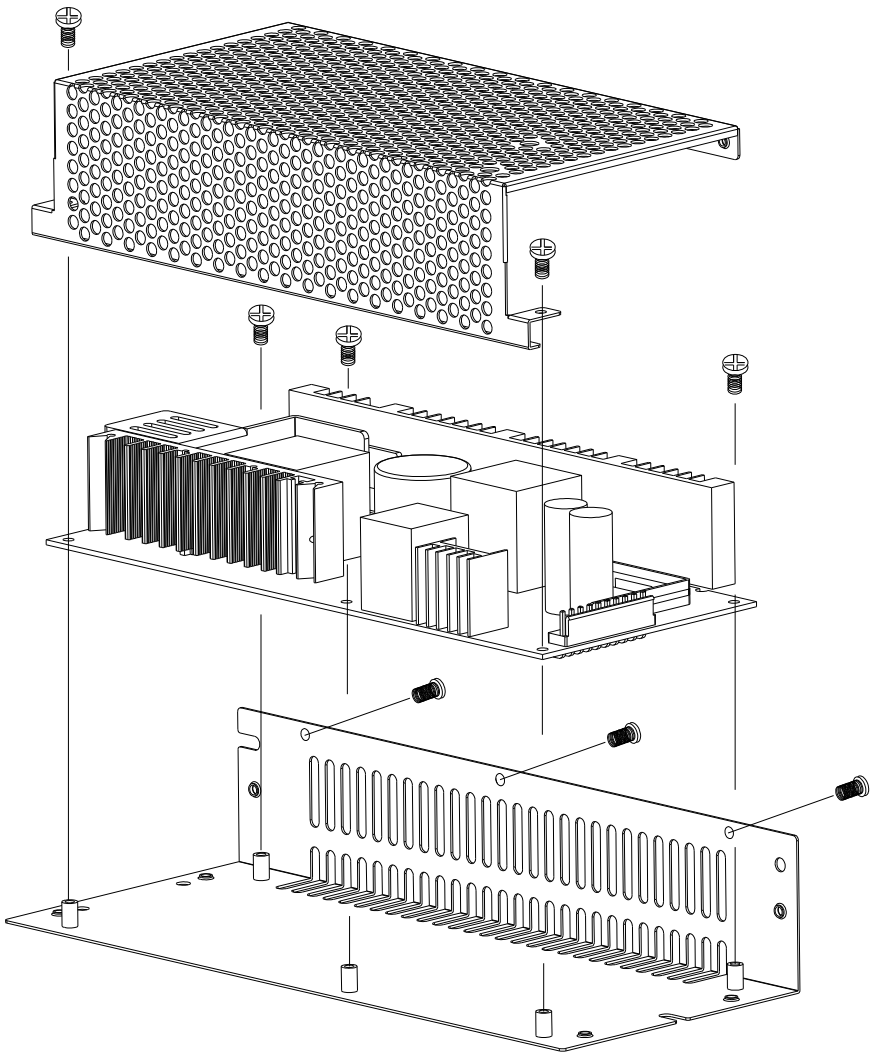

■ Block Diagram

PFC fosc : 100KHz

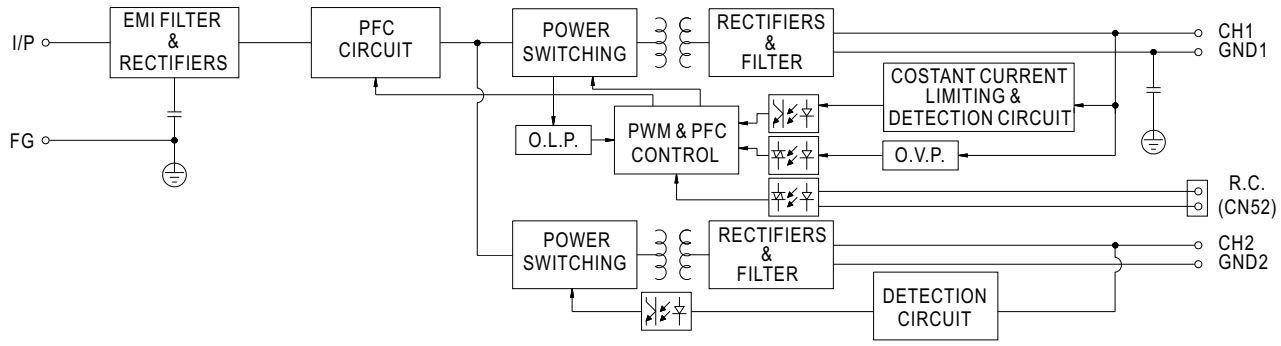

■ Derating Curve

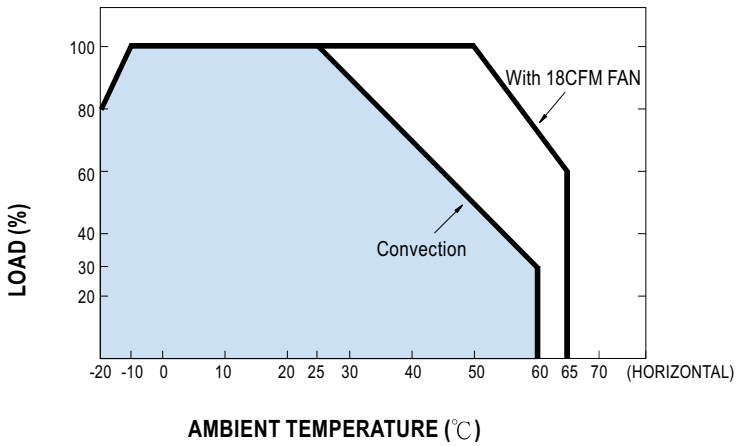

■ Output Derating VS Input Voltage

