PICDEM™ Lab Development Board

User's Guide

© 2009 Microchip Technology Inc.

Note the following details of the code protection feature on Microchip devices:

- Microchip products meet the specification contained in their particular Microchip Data Sheet.
- Microchip believes that its family of products is one of the most secure families of its kind on the market today, when used in the intended manner and under normal conditions.
- There are dishonest and possibly illegal methods used to breach the code protection feature. All of these methods, to our knowledge, require using the Microchip products in a manner outside the operating specifications contained in Microchip's Data Sheets. Most likely, the person doing so is engaged in theft of intellectual property.
- Microchip is willing to work with the customer who is concerned about the integrity of their code.
- Neither Microchip nor any other semiconductor manufacturer can guarantee the security of their code. Code protection does not mean that we are guaranteeing the product as "unbreakable."

Code protection is constantly evolving. We at Microchip are committed to continuously improving the code protection features of our products. Attempts to break Microchip's code protection feature may be a violation of the Digital Millennium Copyright Act. If such acts allow unauthorized access to your software or other copyrighted work, you may have a right to sue for relief under that Act.

Information contained in this publication regarding device applications and the like is provided only for your convenience and may be superseded by updates. It is your responsibility to ensure that your application meets with your specifications. MICROCHIP MAKES NO REPRESENTATIONS OR WARRANTIES OF ANY KIND WHETHER EXPRESS OR IMPLIED, WRITTEN OR ORAL, STATUTORY OR OTHERWISE, RELATED TO THE INFORMATION, INCLUDING BUT NOT LIMITED TO ITS CONDITION, QUALITY, PERFORMANCE, MERCHANTABILITY OR FITNESS FOR PURPOSE**.** Microchip disclaims all liability arising from this information and its use. Use of Microchip devices in life support and/or safety applications is entirely at the buyer's risk, and the buyer agrees to defend, indemnify and hold harmless Microchip from any and all damages, claims, suits, or expenses resulting from such use. No licenses are conveyed, implicitly or otherwise, under any Microchip intellectual property rights.

Trademarks

The Microchip name and logo, the Microchip logo, Accuron, dsPIC, KEELOQ, KEELOQ logo, MPLAB, PIC, PICmicro, PICSTART, rfPIC, SmartShunt and UNI/O are registered trademarks of Microchip Technology Incorporated in the U.S.A. and other countries.

FilterLab, Linear Active Thermistor, MXDEV, MXLAB, SEEVAL, SmartSensor and The Embedded Control Solutions Company are registered trademarks of Microchip Technology Incorporated in the U.S.A.

Analog-for-the-Digital Age, Application Maestro, CodeGuard, dsPICDEM, dsPICDEM.net, dsPICworks, dsSPEAK, ECAN, ECONOMONITOR, FanSense, In-Circuit Serial Programming, ICSP, ICEPIC, Mindi, MiWi, MPASM, MPLAB Certified logo, MPLIB, MPLINK, mTouch, PICkit, PICDEM, PICDEM.net, PICtail, PIC^{32} logo, PowerCal, PowerInfo, PowerMate, PowerTool, REAL ICE, rfLAB, Select Mode, Total Endurance, WiperLock and ZENA are trademarks of Microchip Technology Incorporated in the U.S.A. and other countries.

SQTP is a service mark of Microchip Technology Incorporated in the U.S.A.

All other trademarks mentioned herein are property of their respective companies.

© 2009, Microchip Technology Incorporated, Printed in the U.S.A., All Rights Reserved.

Printed on recycled paper.

QUALITY MANAGEMENT SYSTEM
CERTIFIED BY DNV
ISO/TS 16949:2002

Microchip received ISO/TS-16949:2002 certification for its worldwide headquarters, design and wafer fabrication facilities in Chandler and Tempe, Arizona; Gresham, Oregon and design centers in California and India. The Company's quality system processes and procedures are for its PIC® MCUs and dsPIC® DSCs, KEELOQ® code hopping devices, Serial EEPROMs, microperipherals, nonvolatile memory and analog products. In addition, Microchip's quality system for the design and manufacture of development systems is ISO 9001:2000 certified.

Table of Contents

Chapter 1. Overview

1.1 Introduction 5
1.2 Highlights 5
1.3 PICDEM™ Lab Development Kit Contents 5
1.4 PICDEM™ Lab Development Board Construction and Layout 6
1.5 Target Power 7
1.6 Connecting the PICkit™ 2 Programmer/Debugger 8
1.7 Solderless Prototyping Area Strip Configuration 9

Chapter 2. Getting Started

2.1 Introduction 11
2.2 Prerequisites 11
2.3 The Software Control Loop 11
2.4 MPLAB® IDE Download Instructions 12
2.5 Installing the Included Lab Files 16

Chapter 3. General Purpose Input/Output Labs

3.1 Introduction 17
3.2 General Purpose Input/Output Labs 17
3.3 GPIO Output Labs 18
3.3.1 Reference Documentation 18
3.3.2 Equipment Required for GPIO Output Labs 18
3.3.3 PICDEM Lab Development Board Setup for GPIO Output Labs 18
3.3.4 Lab 1: Light LEDs 19
3.3.5 Lab 2: Flash LEDs (Delay Loop) 25
3.3.6 Lab 3: Simple Delays Using Timer0 29
3.3.7 Lab 4: Rotate LEDs 34
3.4 GPIO Input Labs 38
3.4.1 Reference Documentation 38
3.4.2 Equipment Required for GPIO Input Labs 38
3.4.3 PICDEM Lab Development Board Setup for GPIO Input Labs 38
3.4.4 Lab 5: Adding a Push Button 39
3.4.5 Lab 6: Push Button Interrupt 48
3.4.6 Lab 7: Push Button Interrupt-on-Change 53
3.4.7 Lab 8: Using Weak Pull-Ups 58

© 2009 Microchip Technology Inc.

Chapter 4. Comparator Peripheral Labs

4.1 Introduction 61

4.2 Comparator Labs 61

4.2.1 Reference Documentation 61

4.2.2 Comparator Labs 61

4.2.3 Equipment Required 61

4.2.4 Lab 1: Simple Compare 62

4.2.5 Lab 2: Using the Comparator Voltage Reference 64

4.2.6 Lab 3: Higher Resolution Sensor Readings Using a Single Comparator 68

Chapter 5. Analog-to-Digital Converter Peripheral Labs

5.1 Introduction 75

5.2 ADC Labs 75

5.2.1 Reference Documentation 75

5.2.2 Equipment Required 75

5.2.3 Lab 1: Simple ADC 76

5.2.4 Lab 2: Audible Temperature Sensor 85

Appendix A. Schematic

A.1 PICDEM Lab Development Kit Schematic 91

© 2009 Microchip Technology Inc.

Preface

NOTICE TO CUSTOMERS

All documentation becomes dated, and this manual is no exception. Microchip tools and documentation are constantly evolving to meet customer needs, so some actual dialogs and/or tool descriptions may differ from those in this document. Please refer to our web site (www.microchip.com) to obtain the latest documentation available.

Documents are identified with a "DS" number. This number is located on the bottom of each page, in front of the page number. The numbering convention for the DS number is "DSXXXXXA", where "XXXXX" is the document number and "A" is the revision level of the document.

For the most up-to-date information on development tools, see the MPLAB® IDE on-line help. Select the Help menu, and then Topics to open a list of available on-line help files.

INTRODUCTION

This chapter contains general information that will be useful to know before using the PICDEM ™Lab Development Board. Items discussed in this chapter include:

- Document Layout
- Conventions Used in this Guide
- Recommended Reading
- The Microchip Web Site
- Customer Support
- Document Revision History

DOCUMENT LAYOUT

This document describes how to use the PICDEM ™Lab Development Board as a development tool to emulate and debug firmware on a target board. The manual layout is as follows:

- **Chapter 1. "Overview"**
- **Chapter 2. "Getting Started"**
- **Chapter 3. "General Purpose Input/Output Labs"**
- **Chapter 4. "Comparator Peripheral Labs"**
- **Chapter 5. "Analog-to-Digital Converter Peripheral Labs"**
- **Appendix A. "Schematic"**

CONVENTIONS USED IN THIS GUIDE

This manual uses the following documentation conventions:

DOCUMENTATION CONVENTIONS

Description	Represents	Examples
Arial font:		
Italic characters	Referenced books	*MPLAB® IDE User's Guide*
	Emphasized text	...is the *only* compiler...
Initial caps	A window	the Output window
	A dialog	the Settings dialog
	A menu selection	select Enable Programmer
Quotes	A field name in a window or dialog	"Save project before build"
Underlined, italic text with right angle bracket	A menu path	*File>Save*
Bold characters	A dialog button	Click **OK**
	A tab	Click the **Power** tab
N'Rnnnn	A number in verilog format, where N is the total number of digits, R is the radix and n is a digit.	4'b0010, 2'hF1
Text in angle brackets < >	A key on the keyboard	Press <Enter>, <F1>
Courier New font:		
Plain Courier New	Sample source code	`#define START`
	Filenames	`autoexec.bat`
	File paths	`c:\mcc18\h`
	Keywords	`_asm, _endasm, static`
	Command-line options	`-Opa+, -Opa-`
	Bit values	`0, 1`
	Constants	`0xFF, 'A'`
Italic Courier New	A variable argument	*`file`*`.o`, where *`file`* can be any valid filename
Square brackets [ ]	Optional arguments	`mcc18 [options]` *`file`* `[options]`
Curly brackets and pipe character: { | }	Choice of mutually exclusive arguments; an OR selection	`errorlevel {0|1}`
Ellipses...	Replaces repeated text	`var_name [, var_name...]`
	Represents code supplied by user	`void main (void) { ... }`

© 2009 Microchip Technology Inc.

RECOMMENDED READING

This user's guide describes how to use the PICDEM™ Lab Development Kit. Other useful documents are listed below. The following Microchip documents are available and recommended as supplemental reference resources.

Readme Files

For the latest information on using other tools, read the tool-specific Readme files in the Readmes subdirectory of the MPLAB® IDE installation directory. The Readme files contain update information and known issues that may not be included in this user's guide.

THE MICROCHIP WEB SITE

Microchip provides online support via our web site at www.microchip.com. This web site is used as a means to make files and information easily available to customers. Accessible by using your favorite Internet browser, the web site contains the following information:

- **Product Support** – Data sheets and errata, application notes and sample programs, design resources, user's guides and hardware support documents, latest software releases and archived software
- **General Technical Support** – Frequently Asked Questions (FAQs), technical support requests, online discussion groups, Microchip consultant program member listing
- **Business of Microchip** – Product selector and ordering guides, latest Microchip press releases, listing of seminars and events, listings of Microchip sales offices, distributors and factory representatives

CUSTOMER SUPPORT

Users of Microchip products can receive assistance through several channels:

- Distributor or Representative
- Local Sales Office
- Field Application Engineer (FAE)
- Technical Support

Customers should contact their distributor, representative or field application engineer (FAE) for support. Local sales offices are also available to help customers. A listing of sales offices and locations is included in the back of this document.

Technical support is available through the web site at: http://support.microchip.com

DOCUMENT REVISION HISTORY

Revision A (February 2009)

- Initial Release of this Document.

© 2009 Microchip Technology Inc.

Chapter 1. Overview

1.1 INTRODUCTION

The PICDEM Lab Development Board supports Microchip's 8, 14, 18 and 20-pin 8-bit MCUs including accommodation for PIC10F products in the 8-pin PDIP package. Dual-row expansion headers on either side of each socket provide connectivity to all pins on the connected PIC® MCU. A solderless prototyping area allows the user to explore a relatively large number of application examples without making permanent modifications to the board. Components permanently mounted to the board are interfaced using expansion headers to the user's application via jumper wires. A variable supply voltage allows user's to supply voltages between 1.2V to 5V to each of the PIC MCU connection sockets.

1.2 HIGHLIGHTS

This chapter discusses:

- PICDEM™ Lab Development Kit Contents
- PICDEM™ Lab Development Board Construction and Layout
- Target Power
- Connecting the PICkit™ 2 Programmer/Debugger
- Solderless Prototyping Area Strip Configuration

1.3 PICDEM™ LAB DEVELOPMENT KIT CONTENTS

The PICDEM™ Development Kit contains the following items:

1. The PICDEM™ Lab Development Board
2. Lab component kit including:
   - (1) PIC16F616 DIP
   - (1) PIC12F615 DIP
   - (4) 10kΩ Resistors
   - (4) 1kΩ Resistors
   - (8) 470Ω Resistors
   - (4) 220Ω Resistors
   - (4) 100Ω Resistors
   - (1) 10kΩ NTC Thermistor
   - (4) Green LEDs
   - (4) Red LEDs
   - (4) 1N4148 Diodes
   - (2) 0.1µF Capacitors
   - (2) 1µF Capacitors
   - (2) 10µF Capacitors
   - (4) Push buttons
   - (10) 5" Jumper Wires
   - (10) 3" Jumper Wires

© 2009 Microchip Technology Inc.

- (10) 1" Jumper Wires
- (4) IRFD9020 P-CH MOSFETs
- (4) IRFD010 N-CH MOSFETs
- (2) 100kΩ Potentiometers

3. PICkit™ 2 Programmer/Debugger with USB Cable
4. CD-ROM including:
   - *"PICDEM™ Lab Development Board User's Guide and Labs"* (DS41369)
   - *"PIC16F631/677/685/687/689/690 Data Sheet"* (DS41262)
   - *"Introduction to MPLAB® IDE and HI-TECH C® PRO for the PIC10/12/16 MCU Family Lite Mode Compiler Tutorial"* (DS41322)
   - Timer: Timer0 Tutorial (Part 1) (DS51682)
   - Timer: Timer0 Tutorial (Part 2) (DS51702)

1.4 PICDEM™ LAB DEVELOPMENT BOARD CONSTRUCTION AND LAYOUT

The Low Pin Count USB Development Board and populated components are shown in Figure 1-1.

FIGURE 1-1: PICDEM™ LAB DEVELOPMENT BOARD

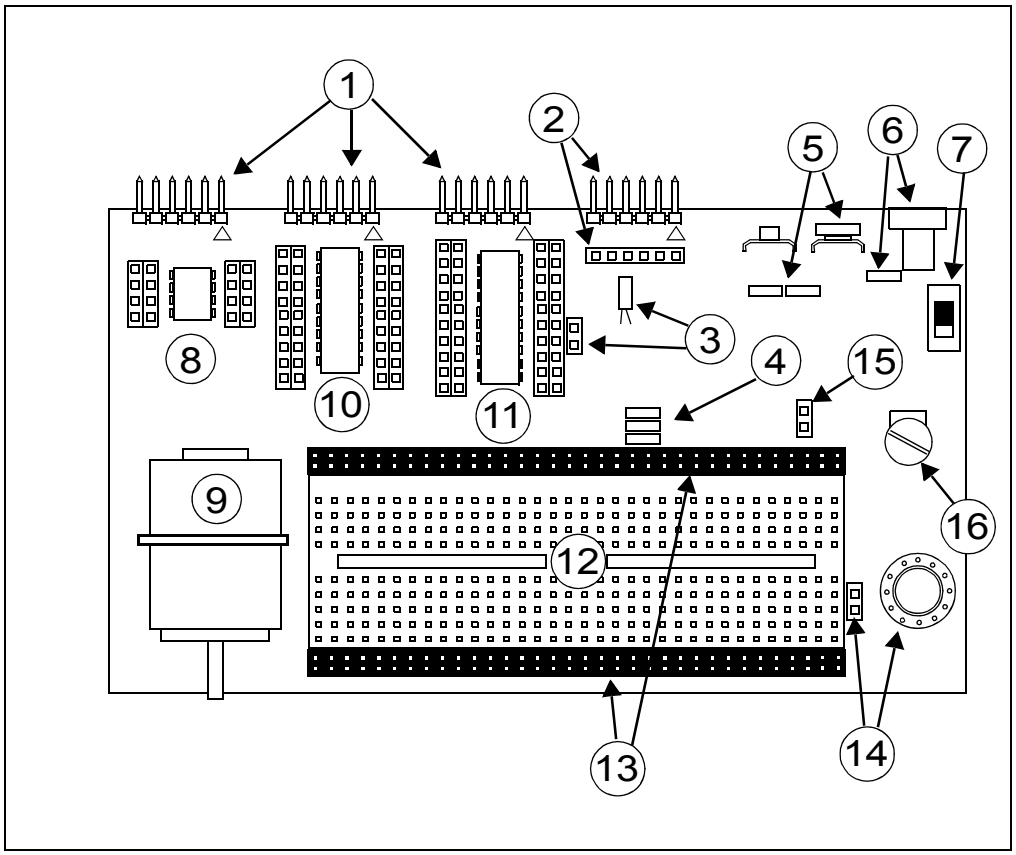

1. **PICkit™ 2 Programmer/Debugger Connection Headers (J13, J12 and J6)**
   a) J13 dedicated to PIC® microcontroller socket U5
   b) J12 dedicated to PIC® microcontroller socket U3
   c) J6 dedicated to PIC® microcontroller socket U2
2. **PICkit™ Serial Analyzer Connection Header (J11) and Receptacle (J15)**
   To use the PICkit™ Serial Analyzer, connect to appropriate PIC MCU expansion header using jumper wires from receptacle.

© 2009 Microchip Technology Inc.

3. **32 kHz Crystal Oscillator (Y1) and Connection Header (J7)**
4. **VDD Connect/Disconnect Jumpers (J3, J4, J5)**
   a) J3 jumper connects/disconnects VDD1 supply to PIC16F690 MCU in socket U2
   b) J4 jumper connects/disconnects VDD2 supply to PIC16F819 MCU in socket U3
   c) J5 jumper connects/disconnects VDD3 supply to PIC10F206 MCU in socket U5
5. **Battery Clip Connection (BT1) for 9V Battery and Jumpers (J14)**
   J14 jumpers connect/disconnect battery terminals for use in future lab on battery chargers**.**
6. **9 VDC Supply Connector (J1) and Connect/Disconnect Jumper (J2)**
7. **Power ON Switch (SW1)**
8. **8-Pin PDIP PIC10F MCU Socket (U5) and Bilateral Dual-Row Expansion Headers (J10 and J18)**
   Dual-row expansion headers provide connectivity to each pin on the PIC10F206 MCU populating socket U5.
9. **5V Brushed DC Motor**
10. **18-Pin PDIP PIC MCU Socket (U3) and Bilateral Dual-Row Expansion Headers (J17 and J16)**
    Dual-row expansion headers provide connectivity to each pin on the PIC16F819 MCU populating socket U3.
11. **8, 14, 20-Pin PDIP PIC MCU Socket (U2) and Bilateral Dual-Row Expansion Headers (J8 and J9)**
    Dual-row expansion headers provide connectivity to each pin on the PIC16F690 MCU populating socket U2.
12. **Solderless Prototyping Area**
13. **Bilateral Dual-Row Supply Headers (J22 and J23)**
    Provide both VDD and VSS connectivity bilaterally to the solderless prototyping area.
14. **0.2 Watt, 8-Ohm Speaker (LS1) with Connection Header (J19)**
    J19 connector used to connect speaker LS1 to user application using jumper wires.
15. **Battery Positive (CP+) and Negative (CP-) Connection Header (J26)**
    Provides connectivity of positive and negative battery terminals to the user application using jumper wires.
16. **Variable VDD Potentiometer (R1)**
    Potentiometer used to vary PIC MCU supply voltage from approximately 1.3V to approximately 5V.

1.5 TARGET POWER

The PICDEM™ Lab Development Board can be powered in one of three ways:

1. Using a 9-12 VDC power supply connected to connector J1
   (MIcrochip part #AC162039 recommended)
   Ensure that connect/disconnect jumper J2 is in place.

2. Using a 9V battery connected to connector BT1
   Ensure that connect/disconnect jumpers J14 are in place.
3. A PICkit™ 2 Programmer/Debugger connected to any one of the three PICkit™ Programmer/Debugger connectors J13, J12 and J6 (recommended for low-power applications only).

> **Note:** When using the PICkit™ 2 Programmer/Debugger as the power source, the variable VDD potentiometer (R1) will not vary the supply voltage.

When using methods 1 or 2, each PIC® microcontroller has an associated connect/disconnect jumper that, when in place, enables the positive supply voltage to the respective VDD pins. The VDD jumpers connect to the following PIC® microcontroller sockets:

1. VDD1 (J3) connects/disconnects supply voltage to the PIC® microcontroller populating U2.
2. VDD2 (J4) connects/disconnects supply voltage to the PIC® microcontroller populating U3.
3. VDD3 (J5) connects/disconnects supply voltage to the PIC® microcontroller populating U5.

Using methods 1 or 2 enables the use of the variable VDD potentiometer (R1) to control supply voltages from approximately 1.3 to 5V. Rotating the potentiometer clockwise will raise the supply voltage while rotating the potentiometer counterclockwise will decrease the supply voltage.

1.6 CONNECTING THE PICkit™ 2 PROGRAMMER/DEBUGGER

The three PIC® microcontrollers populating sockets U5, U3 and U2 have their own PICkit™ Programmer/Debugger (ICSP™) connectors so that each can be programmed or debugged individually. The ICSP™ connect to the following PIC® microcontroller sockets:

1. ICSP1 (J6) connects to the PIC® microcontroller populating U2.
2. ICSP2 (J12) connects to the PIC® microcontroller populating U3.
3. ICSP3 (J13) connects to the PIC® microcontroller populating U5.

The PICkit™ Programmer/Debugger connects to the ICSP™ connector as shown in Figure 1-2.

© 2009 Microchip Technology Inc.

FIGURE 1-2: CONNECTING THE PICkit™ PROGRAMMER/DEBUGGER TO AN ICSP™ CONNECTOR

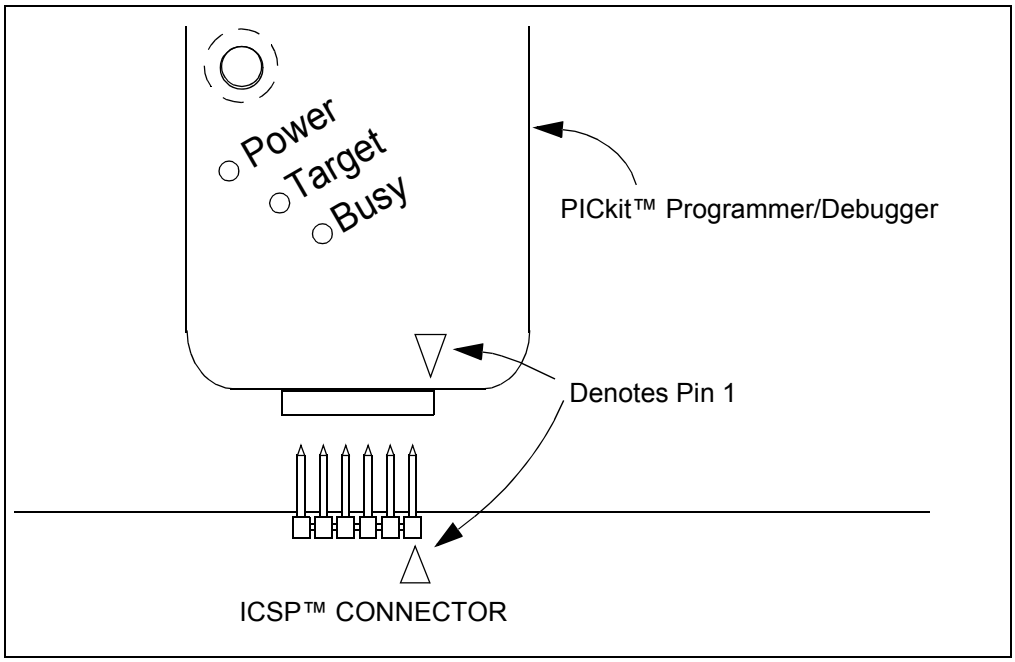

The PICkit™ 2 Programmer/Debugger is then connected to an available USB port on the PC using the included USB cable.

1.7 SOLDERLESS PROTOTYPING AREA STRIP CONFIGURATION

The solderless prototyping area contains a variety of strips under the perforated plastic block. These strips “short” vertical rows of holes together as shown in Figure 1-3.

FIGURE 1-3: SOLDERLESS PROTOTYPING AREA STRIP CONFIGURATION

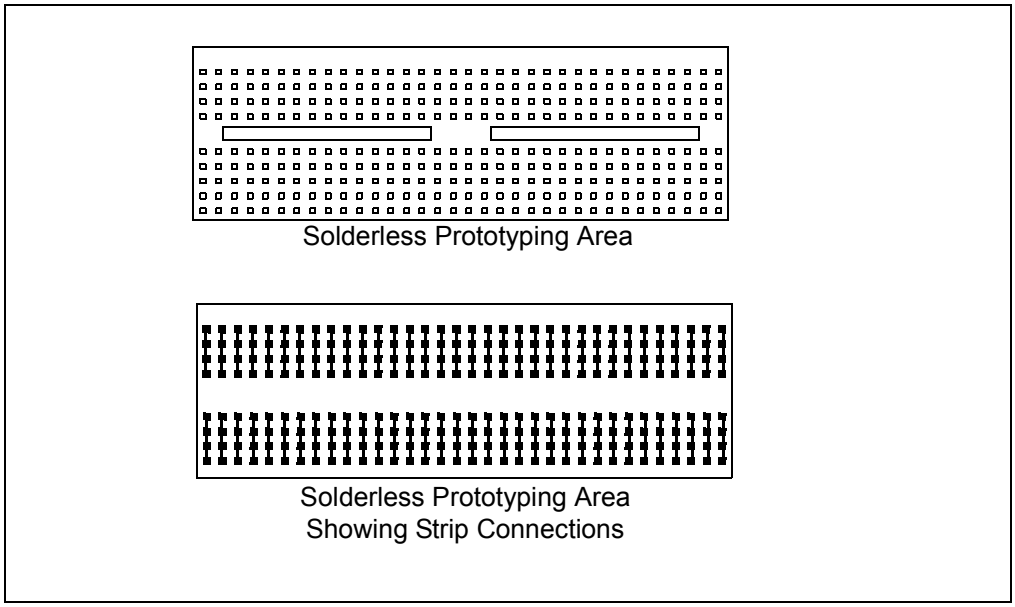

NOTES:

© 2009 Microchip Technology Inc.

Chapter 2. Getting Started

2.1 INTRODUCTION

This chapter is intended to prepare the reader to complete the labs in the remaining chapters of this user's guide.

2.2 PREREQUISITES

The labs contained within this lab manual assumes the user:

1. Has a basic understanding of the C programming language.
2. Understands basic circuit analysis.
3. Has completed or understands the concepts contained within the introductory tutorial: *"Introduction to MPLAB® IDE and HI-TECH C® PRO for the PIC10/12/16 MCU Family Lite Mode Compiler Tutorial"* (DS41322B) provided on the accompanying CD-ROM.

2.3 THE SOFTWARE CONTROL LOOP

The labs used in this user's guide implement a software control loop in various configurations but always in the same sequence as shown in Example 2-1.

FIGURE 2-1: `MAIN()` SOFTWARE CONTROL LOOP FLOWCHART FOR USED IN LABS

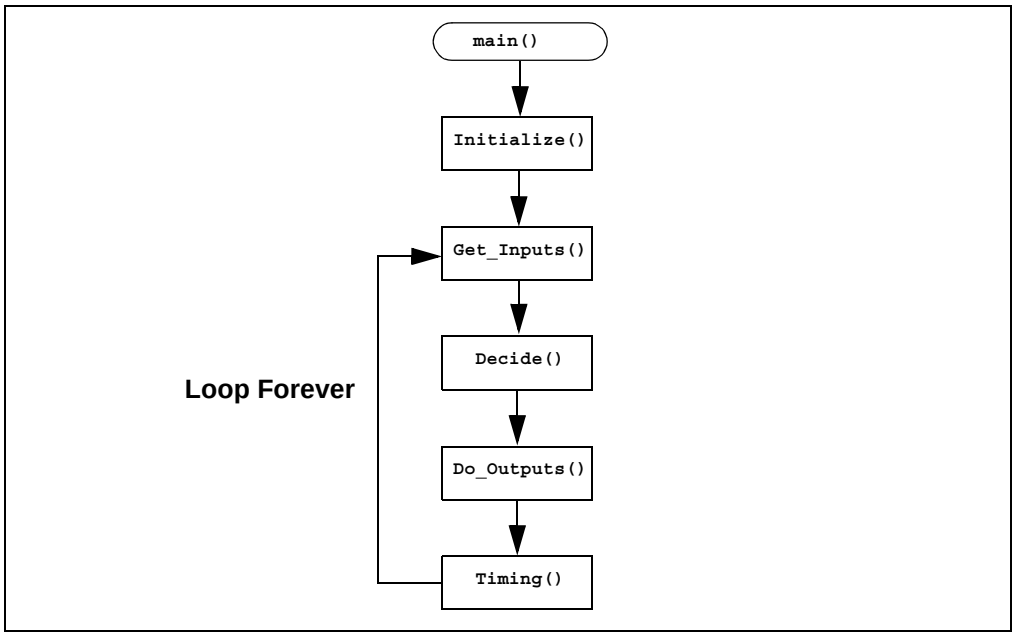

Each block of the software control loop represents a function that organizes tasks into logical, organized groupings that are called from the **main function (`main()`)**. Notice the **`Initialize()`** is called only once while the remaining functions are executed repeatedly. This method organizes the embedded firmware application into a logic sequence of events:

1. **`Initalize()`**:
   - Initializes the microcontroller, the peripherals used in the application and any global variables used by multiple functions.
2. **`Get_Inputs()`**:
   - Obtains any input information either on-chip (from internal registers, etc...) or off-chip (pin voltage levels).
3. **`Decide()`**:
   - Makes decisions based on the input information gathered in the previous function to manipulate global variables.
4. **`Do_Outputs()`**:
   - Based on the decisions made in the previous function, this function outputs data onto the pins of the microcontroller or to registers within the device.
5. **`Timing()`**:
   - This function determines how fast the software control loop executes.

Example 2-1 shows a typical **`main()`** calling the various functions that make up the software control loop.

EXAMPLE 2-1: TYPICAL SOFTWARE CONTROL LOOP `MAIN()` USED IN LABS

```
void main(void)
{
   Initialize(); //Initialize the relevant registers


   while(1)
   {


         Decide();//Make any decisions
         Do_Outputs(); //Perform any outputs
         Timing();//Sets execution rate of the
         //Software Control Loop
   }
}
```

An `infinity` loop will be used by all labs in this user's guide created using a `while` loop that repeatedly call the functions within the curly braces as long as there is power to the microcontroller.

Global variables are used wherever needed in lieu of passing variables between functions.

2.4 MPLAB® IDE DOWNLOAD INSTRUCTIONS

The following steps outline how to download the latest version of the MPLAB IDE and HI-TECH C® PRO for the PIC10/12/16 MCU Families compiler. It is strongly recommended that all open programs and applications are closed to expedite the installation process.

© 2009 Microchip Technology Inc.

1. Using a PC that is connected to the internet, navigate to the MPLAB® IDE download page at the following url:

www.microchip.com/mplab

This page outlines the MPLAB IDE and also features downloadable plug-ins, User's Guides and other useful information.

2. Scroll down to the **Downloads** section of the page and select the latest full release zip file for **MPLAB IDE vx.xx**. (See Figure 2-2.)

FIGURE 2-2: MPLAB ZIP FILE

3. When prompted open the .zip file and extract all contents to a new folder named something meaningful such as "MPLAB" created in a directory such as Desktop or another location easily accessible.
4. Once all files are extracted, navigate to the folder created and double click on the `Install_MPLAB_vxxx.exe` file to start the installation process.
5. The MPLAB® Tools x.xx Installation window should now be open. Click *Next>* to proceed with the installation.
6. In the next window, read through the MPLAB IDE License Agreement and ensure that the **I accept the terms of the license agreement** radio button is selected. Click *Next>* to continue with the installation.
7. In the Setup Type window select the setup type (complete is recommended for new users) and click *Next>* to continue.
8. In the Choose Destination Location it is recommended to use the default direct `C:\Program Files\Microchip\`. Click *Next>* to continue.
9. Accept the Application Maestro License agreement in the next window and click *Next>* to continue.
10. Click *Next>* in the Start Copying Files window to start the installation (this may take several minutes to complete).
11. During the installation process, the user will be prompted to install the free HI-TECH C® PRO for the PIC10/12/16 MCU Compiler. It is recommended that the user install the compiler at this point. Select Yes to launch the installer. In the installer window, click **Next** to continue. (See Figure 2-3.)

FIGURE 2-3: HI TECH INSTALLER WINDOW

12. In the next window, accept the terms of the license agreement and click **Next** to continue. (See Figure 2-4.)

FIGURE 2-4: HI TECH LICENSE AGREEMENT

13. In the next window, select any components in addition to the HI-TECH C® Pro for the PIC10/12/16 MCU Family Compiler to install (additional components are not required to complete the labs in this user's guide) and click **Next** to continue. (See Figure 2-5.)

© 2009 Microchip Technology Inc.

FIGURE 2-5: HI TECH COMPONENTS

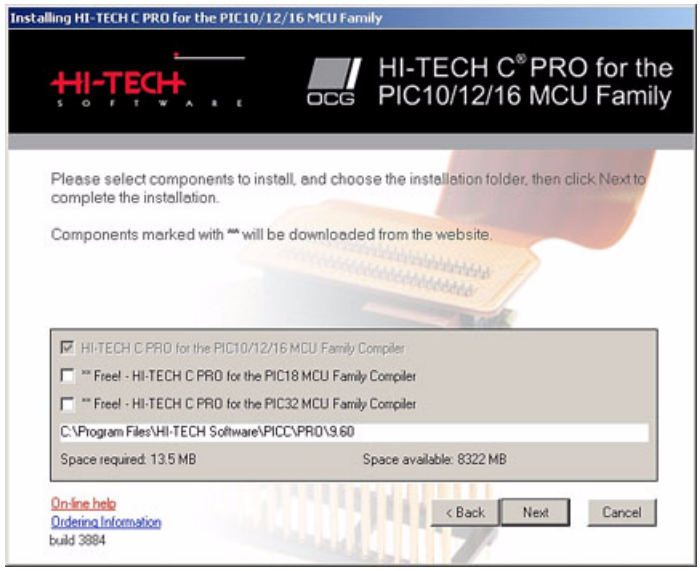

14. In the next window, choose the language of preference, select the **Add to environment path** radio button and click **Next** to continue. (See Figure 2-6.)

FIGURE 2-6: HI TECH LANGUAGE PREFERENCES

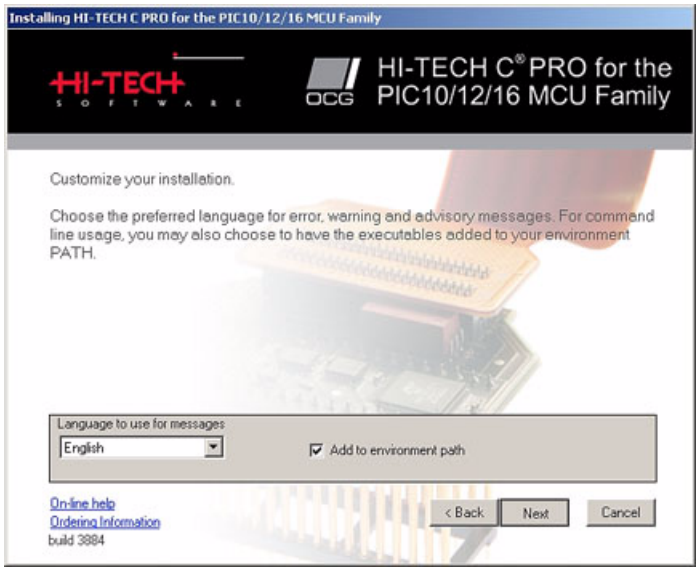

The installation process will now begin.

15. Once the installation is complete, a confirmation window will open. Select or de-select the **Read quick start guide now?** radio button and click **Finish** to proceed. (See Figure 2-7.)

FIGURE 2-7: HI TECH INSTALL CONFIRMATION

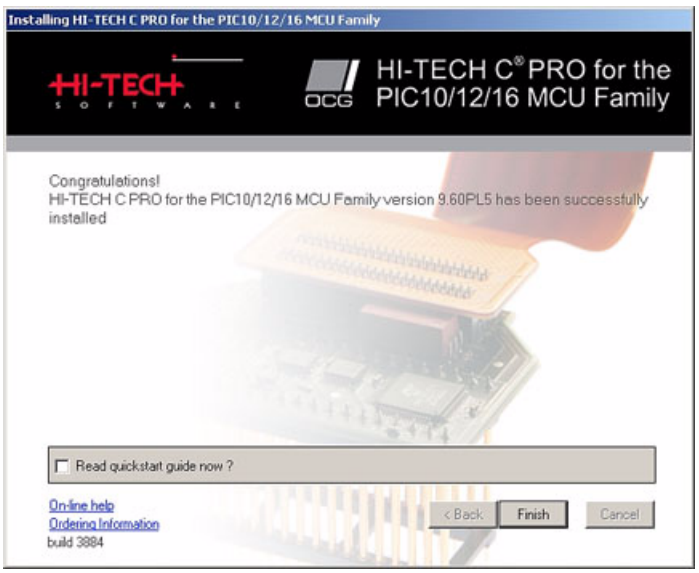

16. The MPLAB® Tools Install Shield Wizard Complete window should soon open and prompt the user to restart the computer before using the software. To begin using the tools, select the **Yes, I want to restart my computer** radio button and click **Finish** to end the installation process and restart the computer.

Following restart, the user will be given the option to view a variety of documentation. To view a document, simply highlight and click **View Selected File**.

The MPLAB® IDE and HI-TECH C® PRO for the PIC10/12/16 MCU Family Lite Mode Compiler are now both installed and ready to use. The user is now ready to complete the labs included in this user's guide.

> **Note:** A comprehensive introduction to the "*HI-TECH C® PRO for the PIC10/12/16 MCU Family Lite Mode Compiler Tutorial*" (DS41322) is provided on the accompanying CD-ROM.

2.5 INSTALLING THE INCLUDED LAB FILES

The PICDEM™ Lab Development Kit CD-ROM includes a .zip file called `PICDEM_Lab.zip`. This file provides a location for the user to save any projects created while completing the labs in this user's guide and contains solutions for each lab in a folder labeled `solution`. To install this folder, simply extract the contents of the .zip file to the `C:\` directory.

> **Note:** Lab folders must be installed to the `C:\` to be used by the MPLAB IDE.

© 2009 Microchip Technology Inc.

Chapter 3. General Purpose Input/Output Labs

3.1 INTRODUCTION

The following labs cover some of the fundamental features of the General Purpose Input/Output (GPIO) peripherals available on the PIC16F690. As the name implies, these peripherals are used for general purpose applications that can monitor and control other off-chip devices. Some PIC® microcontrollers have multiple GPIO peripherals on-chip including the PIC16F690 used in the following labs. Therefore, the PORTx naming convention is used. Available ports on the PIC16F690 are:

- PORTA
- PORTB
- PORTC

Reading through the data sheet highlights some of the unique characteristics associated with each port and the reader is encouraged to explore these in greater detail once comfortable with the labs in this user's guide. The labs will focus on two of the port peripherals: PORTC and PORTA. Labs will be naturally divided into two sections since these are General Purpose Input/Output peripherals:

- Output Labs
- Input Labs

Output labs will introduce the reader to concepts necessary to configuring these peripherals for output to off-chip devices using applicable registers by lighting 8 LEDs connected to the PORTC pins

The Input labs will then add a push button interfacing to one of the PORTA pins to highlight concepts necessary for configuring these peripherals to receive information from off-chip devices. Finally, interrupts will be used to optimize the application for different purposes.

3.2 GENERAL PURPOSE INPUT/OUTPUT LABS

- **Output Labs:**
  - Lab 1: Light LEDs
  - Lab 2: Flash LEDs (Delay Loop)
  - Lab 3: Simple Delays Using Timer0
  - Lab 4: Rotate LEDs
- **Input Labs:**
  - Lab 5: Adding a Push Button
  - Lab 6: Push Button Interrupt
  - Lab 7: Push Button Interrupt-on-Change
  - Lab 8: Using Weak Pull-ups

3.3 GPIO OUTPUT LABS

3.3.1 Reference Documentation

All documentation is available on the PICDEM™ Lab Development Kit accompanying CD-ROM.

- PIC16F690 Data Sheet (DS41262)
  - Section 2.2.2.2: Option Register
  - Section 2.2.2.3: Interrupt Control Register INTCON
  - Section 4: I/O Ports
  - Section 5: Timer0 Module
- Timers: Timer0 Tutorial (Part 1) (DS51628)
- Timers: Timer0 Tutorial (Part 2) (DS51702)
- *"Introduction to MPLAB® IDE and HI-TECH C® PRO for the PIC10/12/16 MCU Family Lite Mode Compiler Tutorial"* (DS41322)

3.3.2 Equipment Required for GPIO Output Labs

To complete the labs in this section, the following components are required:

1. 8 – Light Emitting Diodes
2. 8 – 470Ω resistors
3. PIC16F690 populating socket U2
4. Assorted jumper wires

3.3.3 PICDEM Lab Development Board Setup for GPIO Output Labs

The GPIO output labs will require that the PICDEM Lab Development Board be configured as shown in Figure 3-1 using the components listed in the previous section.

FIGURE 3-1: PICDEM LAB SCHEMATIC FOR GPIO OUTPUT LABS

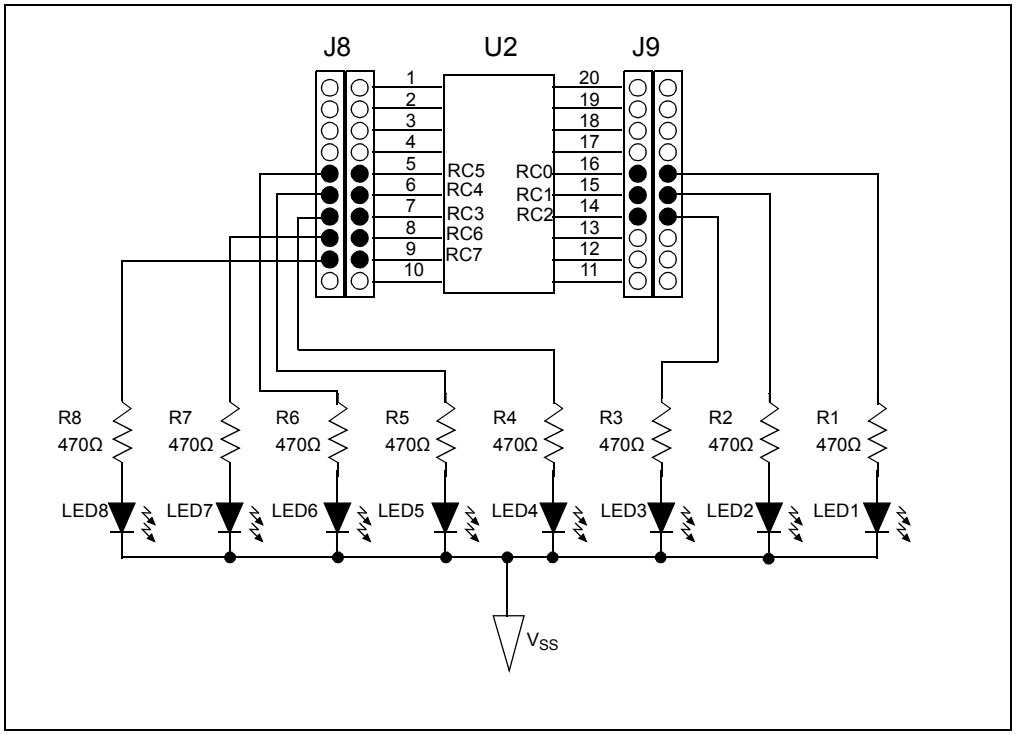

© 2009 Microchip Technology Inc.

Special care should be observed when connecting the LED jumper wires to the expansion headers surrounding the PIC16F690, as the PORTC pins are not in sequential order. The 470Ω resistors are used to limit the current across the LEDs to manufacturer specifications. Furthermore, the PIC16F690 Data Sheet electrical specifications (see Section 17.0) specify that each port pin should not source/sink more than 25 mA. The maximum output current sourced/sunk by all port pins combined should not exceed 200 mA. The 470Ω resistors keep all source current well within these specifications.

3.3.4 Lab 1: Light LEDs

3.3.4.1 NEW REGISTERS USED IN THIS LAB

To configure the peripherals used in this lab, the following registers are used:

1. PORTC Register: PORTC (Register 4-11 in Section 4 of the PIC16F690 Data Sheet).
   - 8-bit bidirectional port.
2. PORTC Tri-State Register: TRISC (Register 4-12 in Section 4 of the PIC16F690 Data Sheet).
   - Configures corresponding bits in PORTC as either input or output.
3. Analog Select Register High and Analog Select Register Low: ANSELH and ANSEL (Registers 4-4 and 4-3 in Section 4 of the PIC16F690 Data Sheet).
   - Configure associated pins for analog or digital input signals.

3.3.4.2 OVERVIEW

This first lab demonstrates how to output data from the PORTC peripheral on the PIC16F690 to its associated pins. LEDs connected to PORTC pins will light when the associated pin is driven high (approx. V_{DD}) or turn the LED OFF when driven low (approx. V_{SS}). The port peripherals will all default to input on start-up and will therefore need to be configured as output using the TRISC register. Also, PORTC pins RC0, RC1, RC2, RC3, RC6 and RC7 are configurable for both analog and digital signals. On start-up, any analog/digital functional pin is defaulted to analog. Therefore, this application will require that these pins be configured as digital by configuring the associated bits in the ANSEL and ANSELH analog select registers.

FIGURE 3-2: `MAIN()` SOFTWARE CONTROL LOOP FLOWCHART FOR LAB 1

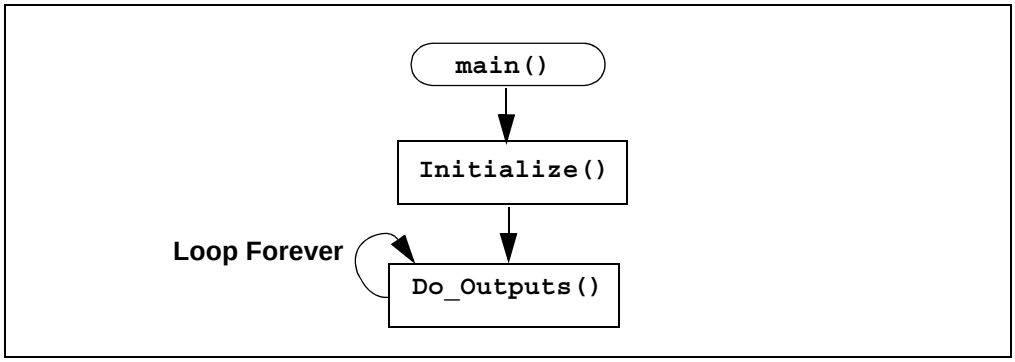

Figure 3-2 shows the software control loop that will be implemented in this lab. At device power-up, the first functional block called from the **`main()`** is **`Initialize()`**. This function will initialize the PORTC peripheral as follows:

- Clear the PORTC register data
- Configure the ANSEL and ANSELH bits so that all associated PORTC pins are digital
- Configure the associated PORTC pins as all output using the TRISC register

> **Note:** The PORT register should always be initialized to a known value before configuring the associated TRIS bit. This avoids unexpected voltage levels on the associated pins since at start-up port bit values are unknown.

The next function called from **`main()`** is **`Do_Outputs()`**. This function will assign values to the PORTC register that will drive the associated pins high or low to light the LEDs connected.

3.3.4.3 PROCEDURE

The following steps will demonstrate how to create a new project in MPLAB® IDE. A more in-depth tutorial is provided in the document *"Introduction to MPLAB® IDE and HI-TECH C® PRO for the PIC10/12/16 MCU Family Lite Mode Compiler Tutorial"* (DS41322) included on the accompanying CD-ROM.

1. Open MPLAB IDE by selecting *Start>Microchip>MPLAB IDE vX.XX>MPLAB IDE*.
2. In the MPLAB IDE toolbar, select *Project>Project Wizard....*
3. The Welcome dialog box should now be open. Select *Next>* to proceed.
4. In the Step One: window, select the PIC16F690 from the Device: drop-down menu and select *Next>* to continue. (See Figure 3-3.)

FIGURE 3-3: STEP ONE

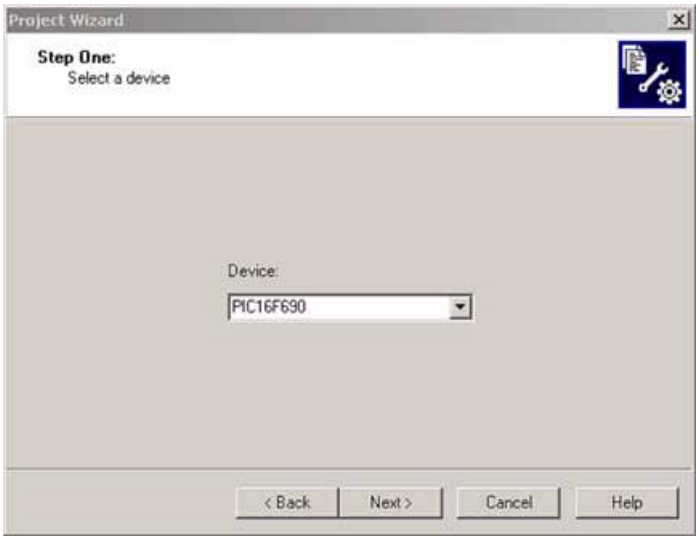

5. In the Step Two: window, select the HI TECH Universal ToolSuite from the Active Toolsuite drop down menu. The window should now resemble Figure 3-4.

© 2009 Microchip Technology Inc.

FIGURE 3-4: STEP TWO

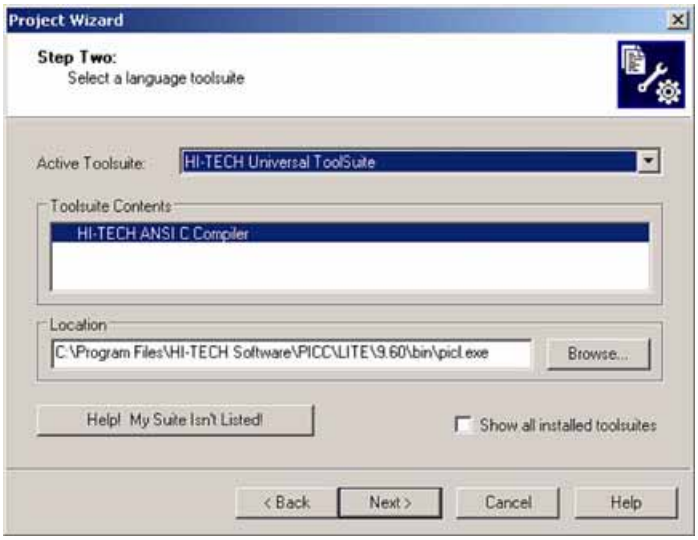

6. In the Step Three: window, use the **Browse** button and navigate to a new folder on the `C:\` drive to store this project. Alternately, the reader may wish to use the `C:\PICDEM_Lab\GPIO_Labs\GPIO_Lab1` folder created earlier. (See Figure 3-5.)

FIGURE 3-5: STEP THREE

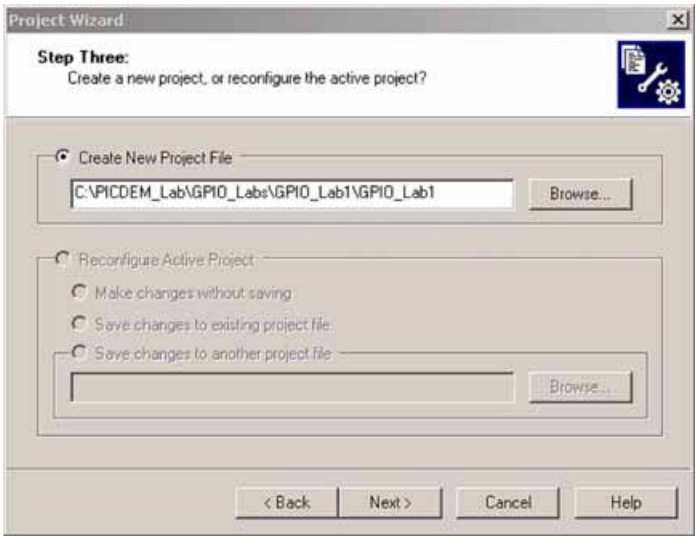

7. In the Step Four: files are added to the project. A `Lab_Template.c` file has been provided in the `C:\PICDEM_Lab\Lab_Template.c` directory that can be used as the basis for all labs in this manual. To use the `Lab_Template.c` file, select it from the right menu and click the **Add>>** button. Click on the large letter 'A' that appears next to the added file in the right window until it becomes a 'C'. This indicates that a copy of the `Lab_Template.c` will be included in the project directory. Otherwise, changes made to the file during the course of the lab will alter the original file.

   Finally, rename the `Lab_Template.c` file in the right window to `GPIO_Lab1.c` by clicking on it three times to enable editing the name. The Step Four: window should now resemble Figure 3-6. Click *Next>* to continue.

FIGURE 3-6: STEP FOUR

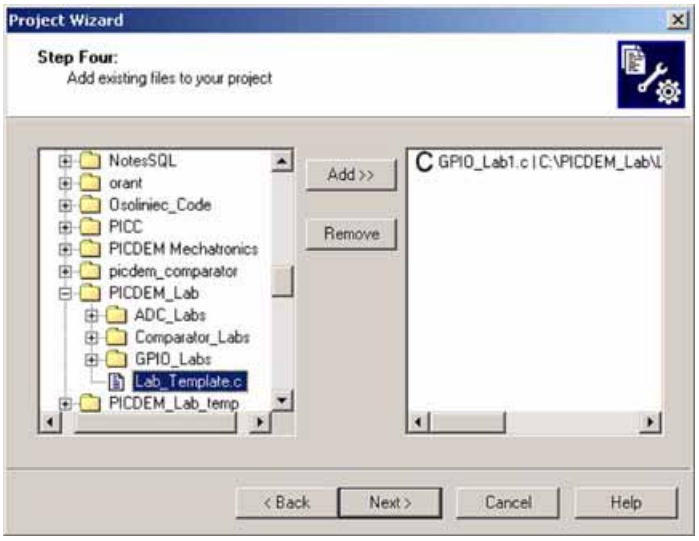

8. Finally, the Summary window should appear showing the selected device, the tool suite and the new project file name. Click **Finish** to exit the Project Wizard.

FIGURE 3-7: SUMMARY

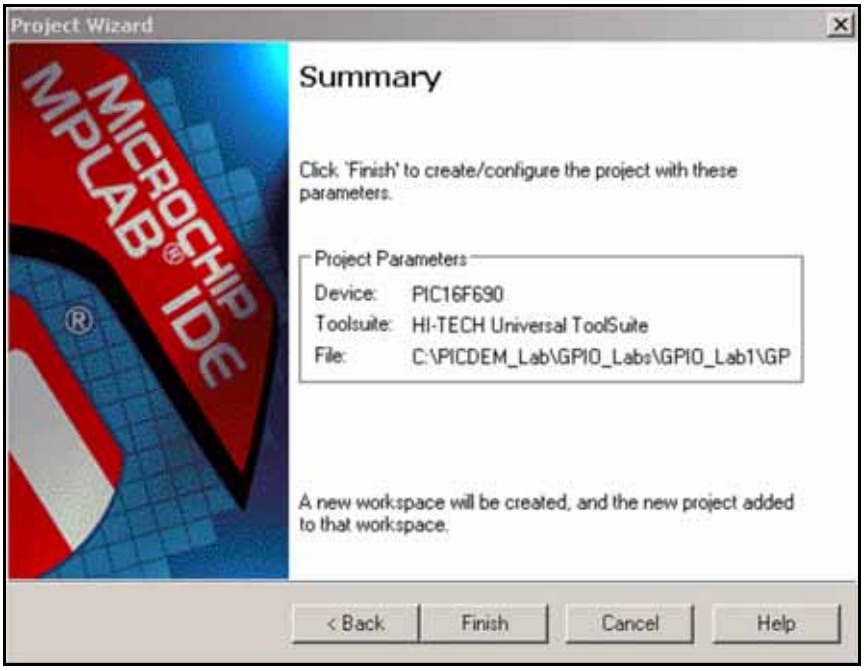

9. The MPLAB® IDE Workspace should now be open. If the Project window is not visible, it can be opened by selecting *View>Project*. The Project window should resemble Figure 3-8.

© 2009 Microchip Technology Inc.

FIGURE 3-8: PROJECT WINDOW

10. Double click on the `GPIO_Lab1.c` source file in the Project window to open.
11. Copy/paste the code in Example 3-1 into the **`Initialize()`** section labeled: **`//ADD INITIALIZE CODE HERE`**

EXAMPLE 3-1: `INITIALIZE()` CODE FOR LAB 1

```
//Clear PORTC to a known state
PORTC = 0b00000000;

//Configure PORTC's ANALOG/DIGITAL pins as all Digital
ANS4 = 0;//Associated with RC0
ANS5 = 0;//Associated with RC1
ANS6 = 0;//Associated with RC2
ANS7 = 0;//Associated with RC3
ANS8 = 0;//Associated with RC6
ANS9 = 0;//Associated with RC7

//Configure PORTC pins as all output
//i.e. 1 = Input, 0 = Output
TRISC0 = 0;//Make RC0 (pin 16) output
TRISC1 = 0;//Make RC1 (pin 15) output
TRISC2 = 0;//Make RC2 (pin 14) output
TRISC3 = 0;//Make RC3 (pin 7) output
TRISC4 = 0;//Make RC4 (pin 6) output
TRISC5 = 0;//Make RC5 (pin 5) output
TRISC6 = 0;//Make RC6 (pin 8) output
TRISC7 = 0;//Make RC7 (pin 9) output
```

12. Copy/paste the code in Example 3-2 into the **`Do_Outputs()`** section labeled: **`//ADD DO_OUTPUTS CODE HERE`**

EXAMPLE 3-2: `DO_OUTPUT()` CODE FOR LAB 1

```
RC0 = 1;//Make RC0 (pin 16) HIGH (approx. Vdd)
RC1 = 0;//Make RC1 (pin 15) LOW (approx. Vss)
RC2 = 1;//Make RC2 (pin 14) HIGH (approx. Vdd)
RC3 = 1;//Make RC3 (pin 7) HIGH (approx. Vdd)
RC4 = 0;//Make RC4 (pin 6) LOW (approx. Vss)
RC5 = 1;//Make RC5 (pin 5) HIGH (approx. Vdd)
RC6 = 0;//Make RC6 (pin 8) LOW (approx. Vss)
RC7 = 1;//Make RC7 (pin 9) HIGH (approx. Vdd)
```

13. Copy/paste the code in Example 3-3 into the **`main()`** section labeled: **`//ADD MAIN CODE HERE`**

EXAMPLE 3-3: `MAIN()` CODE FOR LAB 1

```
Initialize(); //Initialize the relevant registers

while(1) //Code within curly braces will loop forever
{
   Do_Outputs(); //Perform any outputs

}
```

The project is now ready to compile and download to the PIC16F690.

14. Compile the project ensuring no errors.
15. Connect the PICkit™ 2 Programmer/Debugger to an available USB port on the PC and then to the ICSP™ connector ICSP1 (J6) on the PICDEM Lab Development Board. The PICkit 2 should recognize if a power source is not connected to the PIC16F690 and provide target power.
16. In the MPLAB™ IDE Project Workspace, select *Programmer>Select Programmer>PICkit 2*.
17. The PICkit 2 Programmer/Debugger toolbar should now be visible in the workspace as shown in Figure 3-9.

© 2009 Microchip Technology Inc.

FIGURE 3-9: PICkit 2 PROGRAMMER/DEBUGGER TOOLBAR

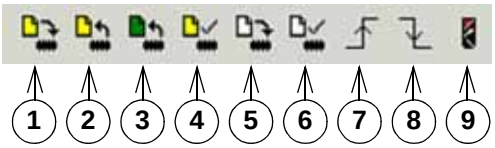

Legend:

1. Program the target device
2. Read target device memories
3. Read the target EEDATA memory
4. Verify the contents of the target device
5. Erase the target device memories
6. Verify that target memories are erased
7. Bring target $\overline{\text{MCLR}}$ to V_{DD}
8. Bring target $\overline{\text{MCLR}}$ to V_{IL}
9. Re-establish PICkit 2 connection

8. Press button1 shown in Figure 3-9 to program the PIC16F690.

3.3.4.4 TESTING THE APPLICATION

Once programmed, the LEDs connected to the individual PORTC pins should now resemble the output shown in Figure 3-10.

FIGURE 3-10: LAB 1 LED OUTPUT

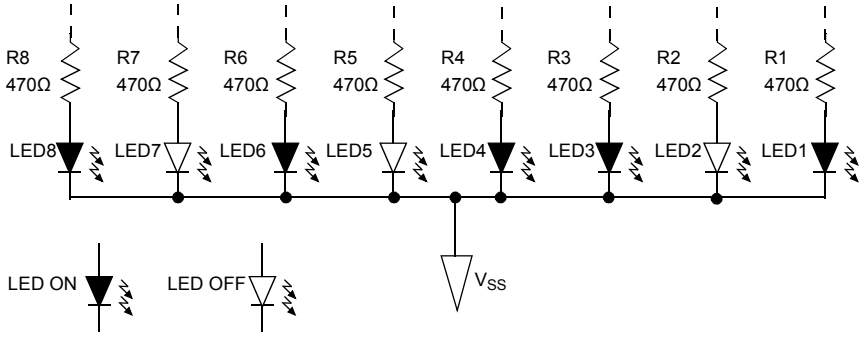

The solution for this project is located in the `C:\PICDEM_Lab\GPIO_Labs\GPIO_Lab1\solution` directory.

3.3.5 Lab 2: Flash LEDs (Delay Loop)

3.3.5.1 OVERVIEW

This lab implements a software delay to flash the LEDs connected to the PORTC pins on/off in 1 second intervals. As configured, the PIC16F690 executes 1 million instructions per second. At this rate, the software loop execution needs to be slowed down so that the LED flashing is visible to the eye. This is done using a delay routine within the **`Timing()`** functional block called from the **`main()`** software control loop as shown in Figure 3-11.

FIGURE 3-11: `MAIN()` SOFTWARE CONTROL LOOP FLOWCHART FOR LAB 2

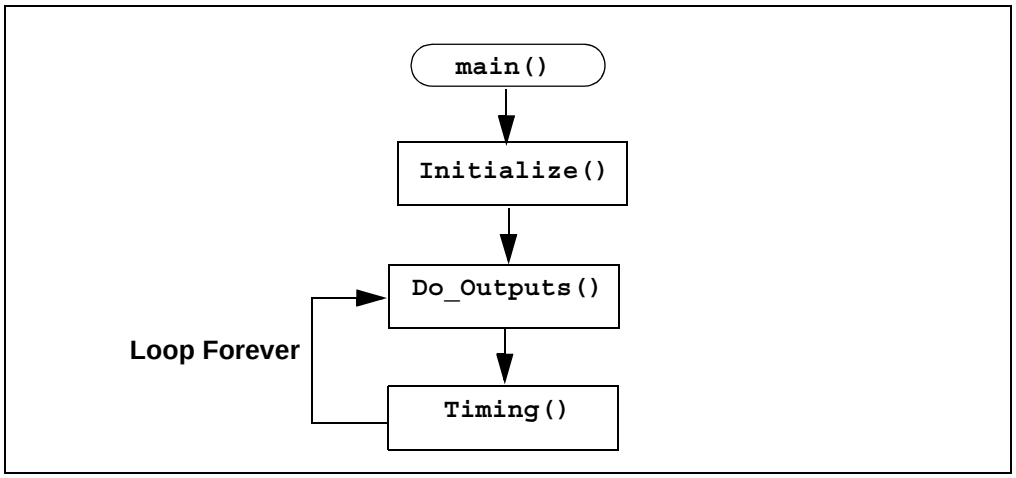

The `Timing()` delay routine is shown in Figure 3-12.

FIGURE 3-12: `TIMING()` DELAY ROUTINE FLOWCHART FOR LAB 2

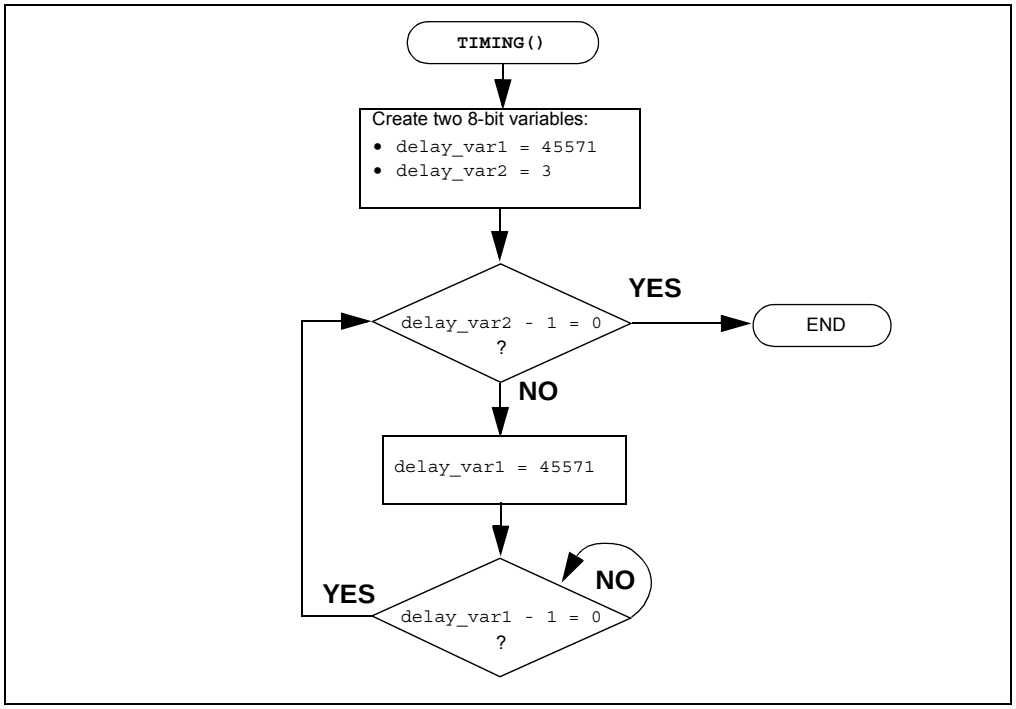

Two variables are used `delay_var1` and `delay_var2`. The `delay_var2` is decremented by 1 each time `delay_var1` is decremented from 45571 to 0. These values have been determined through trial and error using a test procedure detailed in the "Timers: Timer0 Tutorial (Part 1)" (DS51682.pdf) included on the PICDEM™ Lab Development Kit CD. This delay ties the up the processor for 1 second when using the 4 MHz internal oscillator.

The `Initialize()` configures the PORTC as follows:

- PORTC
  - Set all bits in the PORTC register HIGH
  - Configure all PORTC pins as digital outputs

© 2009 Microchip Technology Inc.

The **`Do_Outputs()`** changes somewhat from the previous lab by implementing the XOR operator to toggle the value in each PORTC bit location each time through the software loop. The XOR operator is implemented in code as follows:

`RCx ^= 1;`

This translates to: **"Make RCx equal to the current value in RCx XOR'd with 1"**

When a value is XOR'd with itself, the result is '`0`' (i.e., `1` XOR'd with `1` = `0`, 0 XOR'd with `0` = `0`). When a value is XOR'd with a value different than itself, the result is '`1`' (i.e., 1 XOR'd with `0` = `1`). Therefore, each time through the loop PORTC bits will toggle from 1-to-0 or 0-to-1 depending on its current value.

3.3.5.2 PROCEDURE

Using the code developed in the previous lab, make the following changes:

1. Copy/paste the code in Example 3-4 over the **`Initialize()`** code from the previous lab.

> **Note:** The reader may wish to create a new project as per the previous lab called `GPIO_Lab2.mcp`

EXAMPLE 3-4: `INITIALIZE()` CODE FOR LAB 2

```
//Set all PORTC bits HIGH (to a known state)
PORTC = 0b11111111;

//Configure PORTC's ANALOG/DIGITAL pins as all Digital
ANS4 = 0;//Associated with RC0
ANS5 = 0;//Associated with RC1
ANS6 = 0;//Associated with RC2
ANS7 = 0;//Associated with RC3
ANS8 = 0;//Associated with RC6
ANS9 = 0;//Associated with RC7

//Configure PORTC pins as all output
//i.e. 1 = Input, 0 = Output
TRISC0 = 0;//Make RC0 (pin 16) output
TRISC1 = 0;//Make RC1 (pin 15) output
TRISC2 = 0;//Make RC2 (pin 14) output
TRISC3 = 0;//Make RC3 (pin 7) output
TRISC4 = 0;//Make RC4 (pin 6) output
TRISC5 = 0;//Make RC5 (pin 5) output
TRISC6 = 0;//Make RC6 (pin 8) output
TRISC7 = 0;//Make RC7 (pin 9) output
```

The only change from the previous lab is that the PORTC bits are all set high to 1.

2. Copy/paste the code in Example 3-5 over the **`Do_Outputs()`** code from the previous lab to accommodate the XOR bit toggle.

EXAMPLE 3-5: `DO_OUTPUT()` CODE FOR LAB 2

```
RC0 ^= 1;//XOR current RC0 value with 1
RC1 ^= 1;//XOR current RC1 value with 1
RC2 ^= 1;//XOR current RC2 value with 1
RC3 ^= 1;//XOR current RC3 value with 1
RC4 ^= 1;//XOR current RC4 value with 1
RC5 ^= 1;//XOR current RC5 value with 1
RC6 ^= 1;//XOR current RC6 value with 1
RC7 ^= 1;//XOR current RC7 value with 1
```

3. Copy/paste the code in Example 3-6 into the **`Timing()`** section labeled: **`//ADD TIMING CODE HERE`**

EXAMPLE 3-6: `TIMING()` FOR LAB 2

```
//--------DELAY 1second-------------------------
//Variable used in delay loop
unsigned int delay_var1 = 45571;
unsigned char delay_var2 = 3;
//Nested while loops to implement a 1 second delay
//Decrement delay_var2, if 0 jump out of loop
while(--delay_var2)
{
   //Decrement delay_var1, if 0 jump out of loop
   while(--delay_var1);
}
```

4. Copy/paste the code in Example 3-7 over the **`main()`** code from the previous lab to incorporate the **`Timing()`**.

EXAMPLE 3-7: `MAIN()` CODE FOR LAB 2

```
Initialize(); //Initialize the relevant registers

while(1)
{
   Do_Outputs(); //Perform any outputs

   Timing();//Sets execution rate of the
          //Software Control Loop

}
```

Compile the project. There should be no errors.

3.3.5.3 TESTING THE APPLICATION

Program the PIC16F690. The LEDs connected to the individual PORTC pins should now all flash on/off in 1 second intervals.

The solution for this project is located in the `C:\PICDEM_Lab\GPIO_Labs\GPIO_Lab2\solution` directory.

© 2009 Microchip Technology Inc.

3.3.6 Lab 3: Simple Delays Using Timer0

3.3.6.1 NEW REGISTERS USED IN THIS LAB

To configure the peripherals used in this lab, the following registers are used:

1. Timer0 Module Register: TMR0
   - Holds a count value of the number of selected edge transition of a clock source.
2. OPTION Register: OPTION_REG (Register 5-1 in Section 5 of the PIC16F690 Data Sheet).
   - Selects clock source used to increment TMR0 result register.
   - Selects clock source edge transition to increment TMR0.
3. Software configurable prescaler to determine the number of clock source edge transitions before incrementing TMR0 register value.
4. Interrupt Control Register: INTCON (Register 2-3 in Section 2 of the PIC16F690 Data Sheet).
   - Contains a flag that when 1, indicates a TMR0 register overflow has occurred.

3.3.6.2 OVERVIEW

To implement a more accurate delay, the Timer0 peripheral can be used. Timer0 is an 8-bit timer/counter that uses a clock source to increment an 8-bit register called TMR0. Since this register is 8 bits, it can increment up 2^8 = 256 times or 0_{10} - 255_{10} (00000000_2 - 11111111_2) inclusive then rollover or overflow back to '0'. Whenever TMR0 overflows, a Timer0 Overflow Flag (T0IF) in the OPTION register is set to '1'. This register also features a prescaler that determines how many clock source cycles it takes to increment TMR0 by '1'. In this way, simply by tracking the T0IF, very accurate delays can be implemented. In this lab, the TMR0 register is configured to increment on the low-to-high transition of an available internal instruction clock on the PIC16F690. This internal instruction clock runs at the rate of the internal oscillator frequency FOSC divided by 4. Therefore, when the PIC16F690 is configured to operate using the internal 4 MHz oscillator, this internal instruction clock runs at a rate of FOSC/4 = 4MHz/4 = 1MHz. This is a period of 1/1MHz = 1 µS. If it is known that TMR0 increments every 1 µS, and it takes 256 internal instruction clock cycles to cause a TMR0 overflow (i.e., 0-255 inclusive), then Equation 3-1 can be derived:

EQUATION 3-1: TMR0 OVERFLOW PERIOD USING FOSC/4

$$\text{TMR0 Overflow Period} = (4/F_{OSC}) \times 256 = 1\ \mu\text{Second} \times 256 = 256\ \mu\text{Seconds}$$

As mentioned, Timer0 also features a prescaler that can be configured to increment the value in TMR0 every 2, 4, 8, 16, 32, 64, 128, or 256 clock source transitions. Therefore, this feature can be added to Equation 3-1 to create Equation 3-2.

EQUATION 3-2: TMR0 OVERFLOW PERIOD WHEN INCLUDING THE PRESCALER

$$\text{TMR0 Overflow Period} = (4/F_{OSC}) \times 256 \times \text{prescaler}$$

Using a 1:32 prescaler setting as an example and a 4 MHz internal oscillator

$$\text{TMR0 Overflow Period} = 1\ \mu\text{S} \times 256 \times 32 = 8.192\text{mS}$$

Finally, TMR0 is a writable register. Meaning that a value can be added to the register to offset the number of counts it takes for the overflow to occur. Equation 3-3 demonstrates how to calculate the value to preload the TMR0 register with to create a 10mS overflow period.

EQUATION 3-3: CALCULATING A TMR0 PRELOAD VALUE TO GENERATE A 10MS OVERFLOW PERIOD

Desired TMR0 Overflow Period = (4/FOSC) x (256 - Preload Value) x prescaler

Using a 1:64 prescaler setting, a 4 MHz internal oscillator and requiring a 10 mS overflow period:

10mS = 1 µSecond x (256 - Preload Value) x 64

10mS/(1 µSecond x 64) = 256 - Preload Value

Preload Value = 256 - [10mS/(1 µSecond x 64)]

Preload Value = 99.75 rounded up becomes 100

Therefore, to produce a 10 mS overflow period, using the internal instruction clock with a 4 MHz internal oscillator and a TMR0 prescaler value of 1:64 requires that TMR0 be preloaded with a value of 100.

The software flowchart to implement a 10mS delay is shown in Figure 3-13.

FIGURE 3-13: `DELAY_10MS()` USING TIMER0

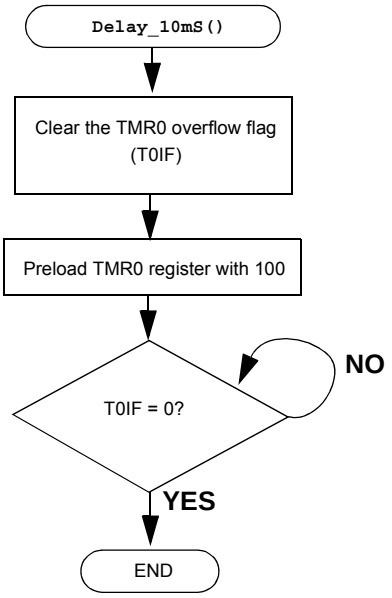

The maximum overflow period that can be achieved using Timer0 only utilizes a 1:256 prescaler is as shown in Equation 3-4.

© 2009 Microchip Technology Inc.

EQUATION 3-4: MAXIMUM TMR0 OVERFLOW PERIOD

TMR0 Overflow Period = (4/FOSC) x 256 x prescaler

using a maximum prescaler setting of 1:256 and the 4MHz internal oscillator

TMR0 Overflow Period = 1 µS x 256 x 256 = 65.5mS

Therefore, to implement delays greater than 65.5mS, a **`counter`** variable is implemented as shown in the flowchart of Figure 3-14 for a 1 second delay.

FIGURE 3-14: `DELAY_1S()` USING TIMER0

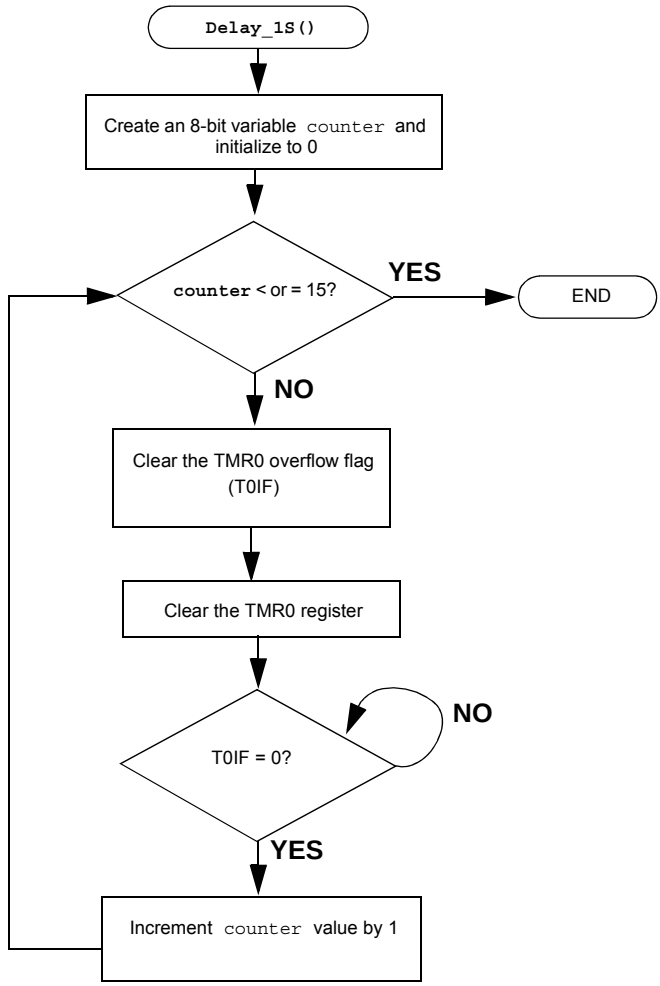

`counter` variable value determined as follows:
1 second/65.5mS = 15.25 or rounded down to 15

The **Initialize()** now configures the PIC16F690 peripherals as follows:

- PORTC
  - Set all bits in PORTC high
  - Make all PORTC pins digital output
- Timer0
  - Use the internal instruction clock (FOSC/4) as the TMR0 register clock source
  - Increment TMR0 register on low-to-high transition of FOSC/4
  - Assign the prescaler to Timer0 and configure to increment on every 256th transition of FOSC/4

3.3.6.3 PROCEDURE

Using the firmware developed in the previous lab, make the following changes:

1. Copy/paste the code in Example 3-8 at the top of the main firmware source file under the heading labeled:
   /SUPPORT ROUTINES**********/**

EXAMPLE 3-8: DELAY_1S() CODE FOR LAB 3

```
/*-------------------------------------------------------
   Subroutine: Delay_1S
   Parameters: none
   Returns:nothing
   Synopsis:Creates a 1S delay when called
-------------------------------------------------------*/
void Delay_1S(void)
{
   //Create an 8-bit variable called counter
   //and initialize it to 0
   unsigned char counter = 0;


   while(counter <=  15)
   {
   //Make sure the T0IF is cleared
   T0IF = 0;

   //Clear the TMR0 register
   TMR0 = 0;
   //Sit here and wait for Timer0 to overflow
      while (T0IF == 0);
      ++counter;

   }

}
```

2. Copy/paste the code in Example 3-9 into the **Initialize()** over the code from the previous lab.

© 2009 Microchip Technology Inc.

EXAMPLE 3-9: `INITIALIZE()` CODE FOR LAB 3

```
//Set all PORTC bits HIGH (to a known state)
   PORTC = 0b11111111;

   //Configure PORTC's ANALOG/DIGITAL pins as all Digital
   ANS4 = 0;//Associated with RC0
   ANS5 = 0;//Associated with RC1
   ANS6 = 0;//Associated with RC2
   ANS7 = 0;//Associated with RC3
   ANS8 = 0;//Associated with RC6
   ANS9 = 0;//Associated with RC7

   //Configure PORTC pins as all output
   //i.e. 1 = Input, 0 = Output
   TRISC0 = 0;//Make RC0 (pin 16) output
   TRISC1 = 0;//Make RC1 (pin 15) output
   TRISC2 = 0;//Make RC2 (pin 14) output
   TRISC3 = 0;//Make RC3 (pin 7) output
   TRISC4 = 0;//Make RC4 (pin 6) output
   TRISC5 = 0;//Make RC5 (pin 5) output
   TRISC6 = 0;//Make RC6 (pin 8) output
   TRISC7 = 0;//Make RC7 (pin 9) output

   //Configure Timer0 as follows:
   T0CS = 0; //Use the internal instruction clock
             //FOSC/4 as the clock source
   T0SE = 0;//Increment TMR0 on low-to-high
             //FOSC/4 transition
   PSA = 0;//Assign the prescaler to
             //Timer0

   //Configure Timer0 prescaler to increment
   //TMR0 every 256 FOSC/4 clock transitions
   PS0 = 1;
   PS1 = 1;
   PS2 = 1;
```

3. Finally, copy/paste the code in Example 3-10 into the `Timing()` over the code from the previous lab

EXAMPLE 3-10: `TIMING()` CODE FOR LAB 3

```
   Delay_1S(); //Call the 1 second delay
```

4. The remaining code from the previous lab remains the same. Compile the project. There should be no errors.

3.3.6.4 TESTING THE APPLICATION

Program the PIC16F690. The application should behave exactly as it did in the previous lab. Using an oscilloscope to test individual PORTC pin level transitions would be useful to analyze the accuracy of the delay.

The solution for this project is located in the `C:\PICDEM_Lab\GPIO_Labs\GPIO_Lab3\solution` directory.

> **Note:** More in-depth tutorials on the Timer0 peripheral are covered in “Timers: Timer0 Tutorial (Part 1)” (5162a.pdf) and “Timers: Timer0 Tutorial (Part 2)” (51702a.pdf) files included on the PICDEM™ Lab Development Kit CD.

3.3.7 Lab 4: Rotate LEDs

3.3.7.1 OVERVIEW

This lab shifts a high bit in the PORTC register from right-to-left each time through the software loop sequentially lighting the LEDs connected to the PORTC pins in 1 second intervals as dictated by the **`Timing()`**. This lab adds some new functional blocks to the **`main()`** software control loop as shown in Figure 3-15.

FIGURE 3-15: `MAIN()` SOFTWARE CONTROL LOOP FLOWCHART FOR LAB 4

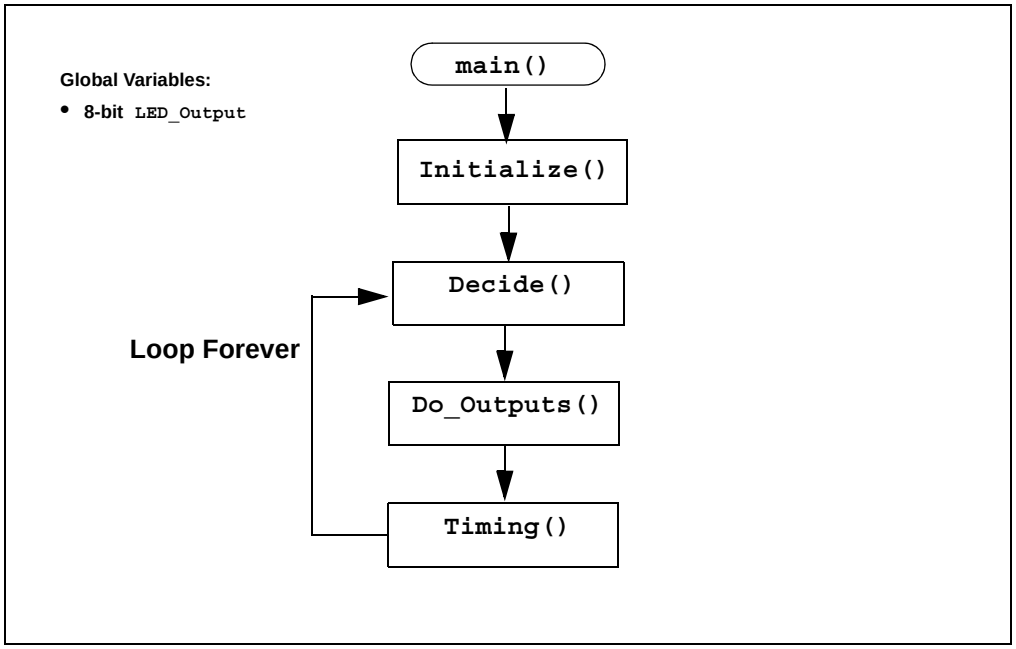

The addition of an 8-bit global variable (can be manipulated by any function) called **`LED_Output`** is used. This variable will be acted upon by the new **`Decide()`** by shifting a high bit in **`LED_Output`** from right-to-left each time this function is called. The flowchart for the **`Decide()`** is shown in Figure 3-16.

FIGURE 3-16: `DECIDE()` FLOWCHART FOR LAB 4

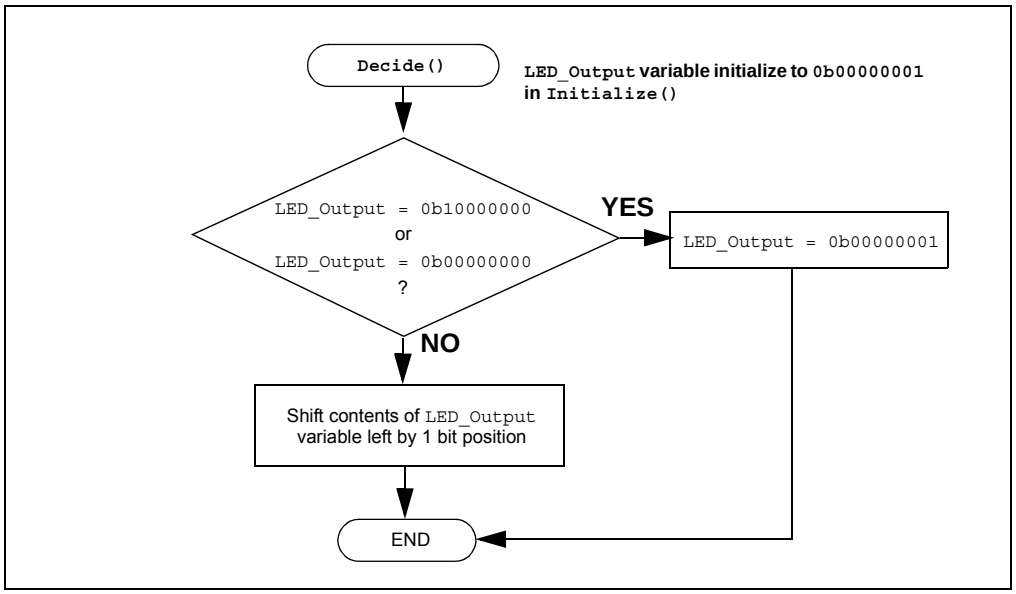

© 2009 Microchip Technology Inc.

The **Decide()** first checks the current value in **LED_Output** for two specific conditions:

- Is the Most Significant bit '1'? This means that on the next shift, the contents will be all '0's.
- Is the value currently a '0'?

If either condition exists, the function re-initializes **LED_Output** to set the Least Significant bit. Otherwise, there will be a period when none of the LEDs are lit.

The shift is implemented in code as follows:

```
LED_Output <<= 1;
```

This translates to: **"LED_Output is equal to the current contents of LED_Output shifted to the left by 1 bit position"**

Conversely, to shift the bit to the right the code would be as follows:

```
LED_Output >>= 1;
```

The **Do_Outputs()** will then assign the contents of the **LED_Output** variable to the PORTC register and whichever bit is high will light the connected LED. (See Figure 3-17.)

FIGURE 3-17: RESULTS OF DO_OUTPUT()

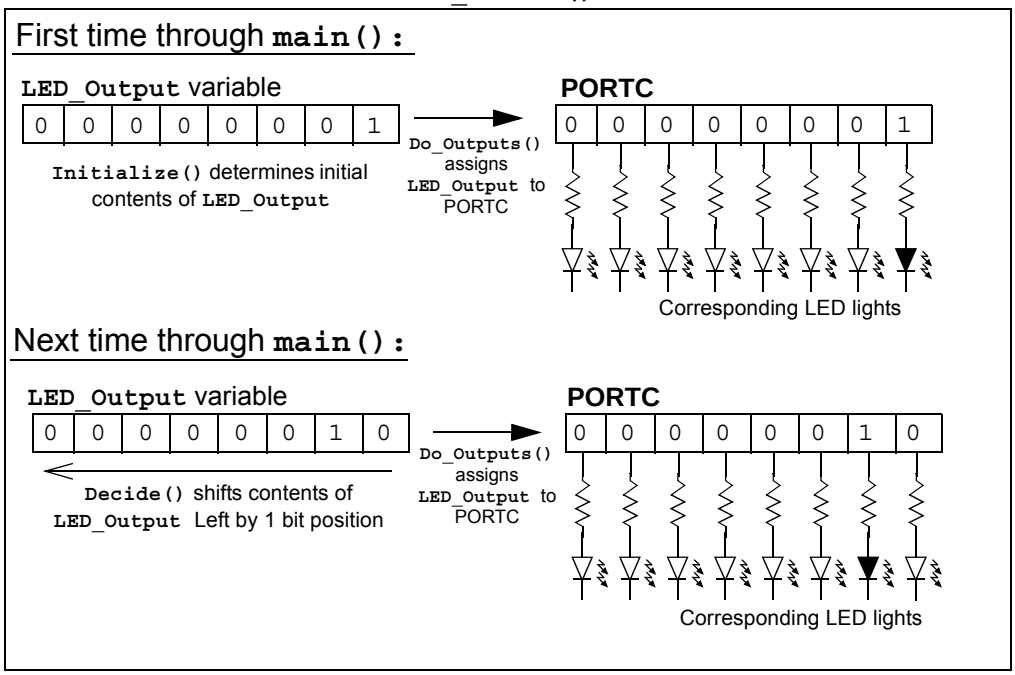

The **Initialize()** now configures the PIC16F690 peripherals as follows:

- PORTC
  - Initialize PORTC so that the 7 Most Significant bits are '0' and the Least Significant bit is '1'
  - Make all PORTC pins digital output
- Timer0
  - Use the internal instruction clock (FOSC/4) as the TMR0 register clock source
  - Increment TMR0 register on low-to-high transition of FOSC/4
  - Assign the prescaler to Timer0 and configure to increment on every 256th transition of FOSC/4
- Initialize the **LED_Output** variable to '0'

3.3.7.2 PROCEDURE

Using the code developed in the previous lab, make the following changes:

1. The **LED_Output** variable will need to be declared before it can be used. Copy/paste the code in Example 3-11 to the beginning of the source file under the section marked:
   //----------DATA MEMORY----------

EXAMPLE 3-11: LED_OUTPUT VARIABLE DECLARATION FOR LAB 4

```
unsigned char LED_Output;//Variable used to set/clear PORTC bits
```

2. Copy/paste the code in Example 3-12 over the **Initialize()** code from the previous lab.

EXAMPLE 3-12: INITIALIZE() CODE FOR LAB 4

```
//Clear PORTC to a known state
PORTC = 0b00000001;

//Configure PORTC's ANALOG/DIGITAL pins as all Digital
ANS4 = 0;//Associated with RC0
ANS5 = 0;//Associated with RC1
ANS6 = 0;//Associated with RC2
ANS7 = 0;//Associated with RC3
ANS8 = 0;//Associated with RC6
ANS9 = 0;//Associated with RC7

//Configure PORTC pins as all output
//i.e. 1 = Input, 0 = Output
TRISC0 = 0;//Associated with RC0
TRISC1 = 0;//Associated with RC1
TRISC2 = 0;//Associated with RC2
TRISC3 = 0;//Associated with RC3
TRISC4 = 0;//Associated with RC4
TRISC5 = 0;//Associated with RC5
TRISC6 = 0;//Associated with RC6
TRISC7 = 0;//Associated with RC7

//Configure Timer0 as follows:
T0CS = 0; //Use the internal instruction clock
          //FOSC/4 as the clock source
T0SE = 0;//Increment TMR0 on low-to-high
          //FOSC/4 transition
PSA = 0;//Assign the prescaler to
          //Timer0

//Configure Timer0 prescaler to increment
//TMR0 every 256 FOSC/4 clock transitions
PS0 = 1;
PS1 = 1;
PS2 = 1;
//Initialize LED_Output to all zeros
LED_Output = 0b00000000;
```


© 2009 Microchip Technology Inc.

Changes from the previous lab include PORTC initialization so that all bits are '0' except for the Least Significant bit (LSb) and the initialization of the **LED_Output** variable.

3. Copy/paste the code in Example 3-13 into the **Decide()** section labeled: **//ADD DECISION CODE HERE**

EXAMPLE 3-13: DECIDE() CODE FOR LAB 4

```
//First check if LED_Output variable has most significant bit
//set to 1 or if LED_Output variable is all 0's.
//If so, re initialize the LED_Output variable so that the
//least significant bit is set to 1 and all other bits are
//cleared to 0
   if((LED_Output == 0b10000000) || (LED_Output == 0b00000000))
LED_Output = 0b00000001;

//If neither of these conditions are true, simply shift
//the LED_Output variable's contents to the Left by 1 bit
//position
   else LED_Output <<=1;
```

4. Copy/paste the code in Example 3-14 over the **Do_Outputs()** code from the previous lab.

EXAMPLE 3-14: DO_OUTPUTS() CODE FOR LAB 4

```
//Assign the manipulated contents of the
//LED_Output variable to the PORTC register
   PORTC = LED_Output;
```

This code simply assigns the contents of the **LED_Output** variable to the PORTC register.

5. Copy/paste the code in Example 3-15 over the **main()** code from the previous lab to incorporate the **Decide()**.

EXAMPLE 3-15: MAIN() CODE FOR LAB 4

```
      Initialize(); //Initialize the relevant registers

      while(1)
      {
         Decide(); //Make any decisions

         Do_Outputs(); //Perform any outputs

         Timing();//Sets execution rate of the
                //Software Control Loop

      }
```

Compile the project. There should be no errors.

3.3.7.3 TESTING THE APPLICATION

Program the PIC16F690. The LEDs connected to the individual PORTC pins should now all flash on/off sequentially from right-to-left in 1 second intervals.

The solution for this project is located in the `C:\PICDEM_Lab\GPIO_Labs\GPIO_Lab4\solution` directory.

3.4 GPIO INPUT LABS

3.4.1 Reference Documentation

PIC16F690 Data Sheet

- Section 2: Memory Organization
- Section 4: I/O Ports
- Section 5: Timer0 Module

3.4.2 Equipment Required for GPIO Input Labs

To complete the labs in this section, the following components are required:

1. 1 – push button
2. 8 – Light Emitting Diodes
3. 1 – 10 KΩ
4. 8 – 470Ω resistors
5. PIC16F690 populating socket U2
6. Assorted jumper wires

3.4.3 PICDEM Lab Development Board Setup for GPIO Input Labs

The GPIO input labs will require that the PICDEM Lab Development Board be configured as shown in Figure 3-12 using the components listed in the previous section.

© 2009 Microchip Technology Inc.

FIGURE 3-18: PICDEM LAB SCHEMATIC FOR GPIO INPUT LABS

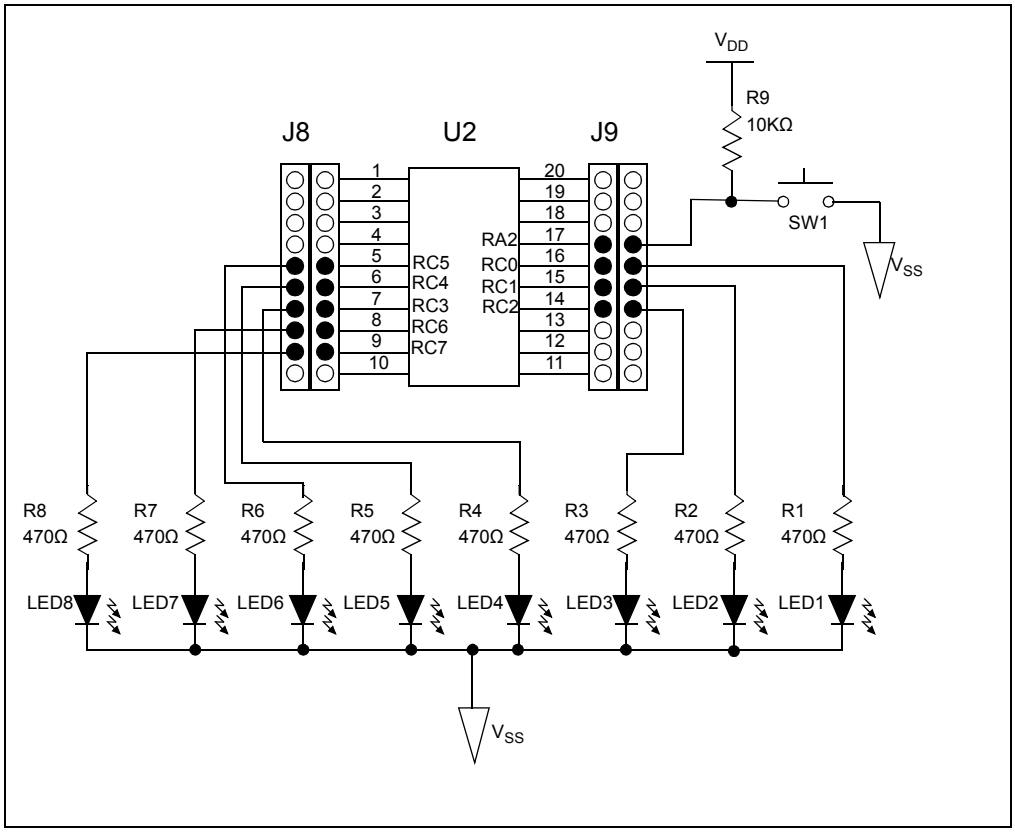

The only change from the previous section is the inclusion of a push button connected to RA2 with associated pull-up resistor.

3.4.4 Lab 5: Adding a Push Button

3.4.4.1 NEW REGISTERS USED IN THIS LAB

To configure the peripherals used in this lab, the following registers are used:

1. PORTA Register: PORTA (Register 4-1 in Section 4 of the PIC16F690 Data Sheet)
   - 8-bit bidirectional port
2. PORTA Tri-State Register: TRISA (Register 4-2 in Section 4 of the PIC16F690 Data Sheet)
   - Configures corresponding bits in PORTA as either input or output

3.4.4.2 OVERVIEW

This lab expands upon Lab 4 by adding a push button interface to change the direction of the sequential shift in the PORTC register.

Mechanical switches play an important and extensive role in practically every computer, microprocessor and microcontroller application. Mechanical switches are inexpensive, simple and reliable. However, switches can be very noisy electrically. The apparent noise is caused by the closing and opening action that seldom results in a clean electrical transition. The connection makes and breaks several, perhaps even hundreds, of times before the final switch state settles. The problem is known as switch bounce. Some of the intermittent activity is due to the switch contacts actually bouncing off each other. Also, switch contacts are not perfectly smooth. As the contacts move against each other, the imperfections and impurities on the surfaces cause the electrical connection to be interrupted. The result is switch bounce. The consequences

of uncorrected switch bounce can range from being just annoying to catastrophic. The classic solution involves filtering, such as through a resistor-capacitor circuit, or through resettable shift registers. These methods are still effective but they involve additional cost in material, installation and board real estate. Debouncing in software eliminates these additional costs.

One of the simplest ways to switch debounce is to sample the switch until the signal is stable or continue to sample the signal until no more bounces are detected. How long to continue sampling requires some investigation. However, 5 mS is usually adequate, while still reacting fast enough that the user won't notice it.

The software flowchart for this application is shown in Figure 3-19.

FIGURE 3-19: `MAIN()` SOFTWARE CONTROL LOOP FLOWCHART FOR LAB 5

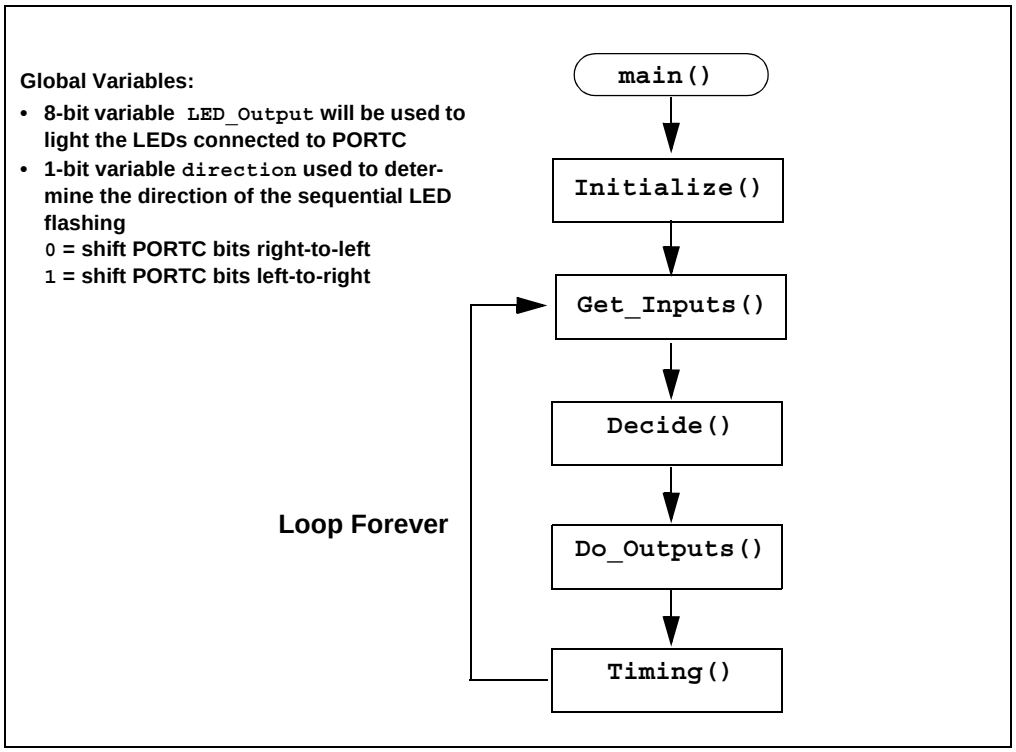

The **`Initialize()`** now configures the following:

- PORTC
  - Configure PORTC pins as per the previous labs
- PORTA
  - Clear PORTA register.
  - Configure RA2 as a digital input pin (see Registers 4-1 and 4-2 in Section 4.1 of the PIC16F690 Data Sheet).
- Timer0 will be configured to implement the 5mS delay as follows:
  - Use the internal instruction clock FOSC/4 as the TMR0 clock source.
  - Increment TMR0 on the low-to-high transition of FOSC/4.
  - Assign the prescaler to TMR0 and configure 1:64.
- Initialize the **`LED_Output`** variable to '0'
- Initialize the **`direction`** bit variable to '0'
  - This is a global variable that will be manipulated by the new **`Get_Inputs()`** and used to determine PORTC shift direction by the **`Decide()`**.

© 2009 Microchip Technology Inc.

A new function called **Get_Inputs()** is used to check the RA2 pin voltage. Referring to Figure 3-12, the RA2 pin connected to the push button (SW1) is pulled to VDD using a 10 KΩ resistor. This pull-up resistor eliminates noise on the pin that could trigger "false" push button presses. The second terminal of the push button is connected to VSS. In this way, when a user presses the push button the voltage present on RA2 will transition from VDD (high or '1') to VSS (low or '0'). The software flowchart for the **Get_Inputs()** is shown in Figure 3-20.

FIGURE 3-20: GET_INPUTS() SOFTWARE FLOWCHART FOR LAB 5

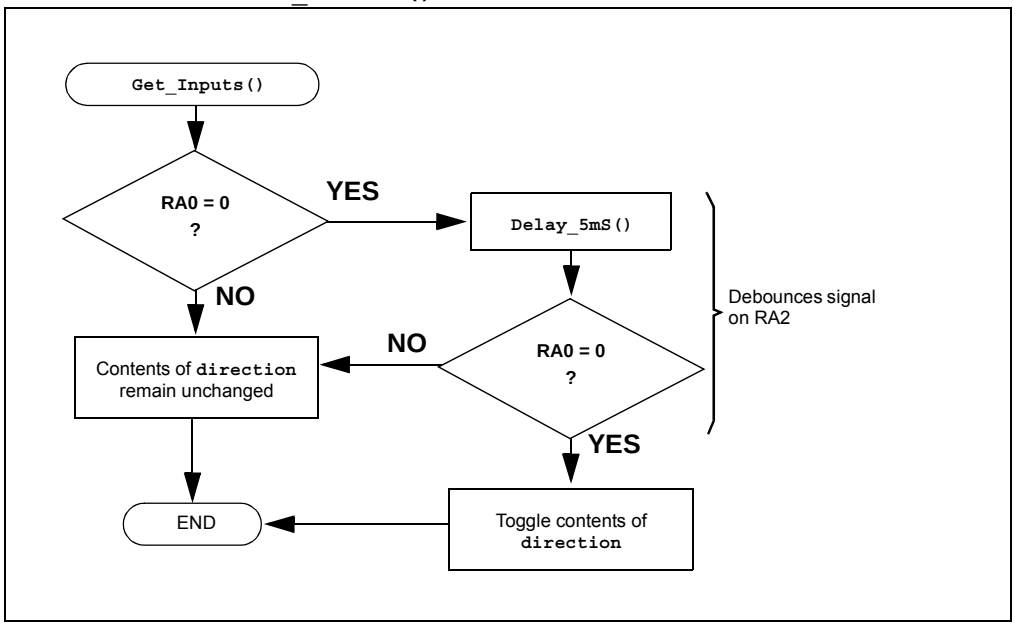

Referring to the flowchart in Figure 3-20, the **Get_Inputs()** first checks the voltage level on the RA2 pin. If the voltage is logic low (= 0 or VSS), a 5mS delay is implemented using a new support routine called **Delay_5mS()** to allow any switch bouncing to settle. The **Delay_5mS()** is based off of the Timer0 peripheral as discussed in Lab 3. The software flowchart for **Delay_5mS()** is shown in Figure 3-21.

FIGURE 3-21: `DELAY_5MS()` SOFTWARE FLOWCHART FOR LAB 5

Timer0 configured in the `Initialize()` as follows:

- Using the internal FOSC/4 (4MHz/4) clock source
- TMR0 increments on low-to-high transition of FOSC/4
- Prescaler configured for 1:32

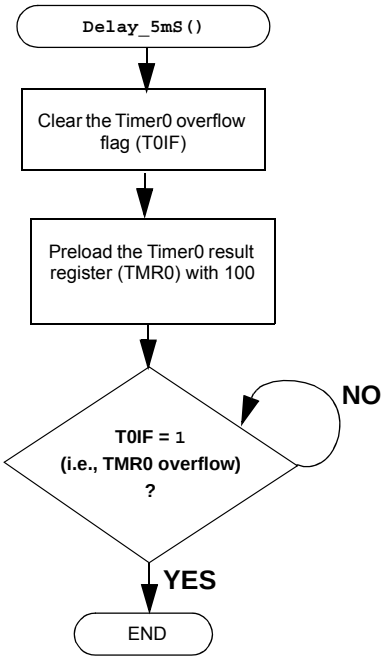

TMR0 preload value determined as follows:

Desired Timer0 Overflow Rate = (4/FOSC) x number of counts to overflow x prescaler

5mS = 1μSeconds x (256 – TMR0 preload value) x 32

$$\text{TMR0 preload value} = 256 - \left(\frac{5\text{mS}}{1\mu\text{Seconds} \times 32}\right) = 99.75 \text{ rounded to } 100$$

The RA2 pin voltage is then checked again. If still low, a push button press is indicated and the `direction` bit variable is toggled. Otherwise, the `direction` value stays the same.

The `Decide()` then uses the current `direction` value to determine which direction to shift the contents of the `LED_Output` global variable. The `Decide()` software flowchart is shown in Figure 3-22.

© 2009 Microchip Technology Inc.

FIGURE 3-22: `DECIDE()` SOFTWARE FLOWCHART FOR LAB 5

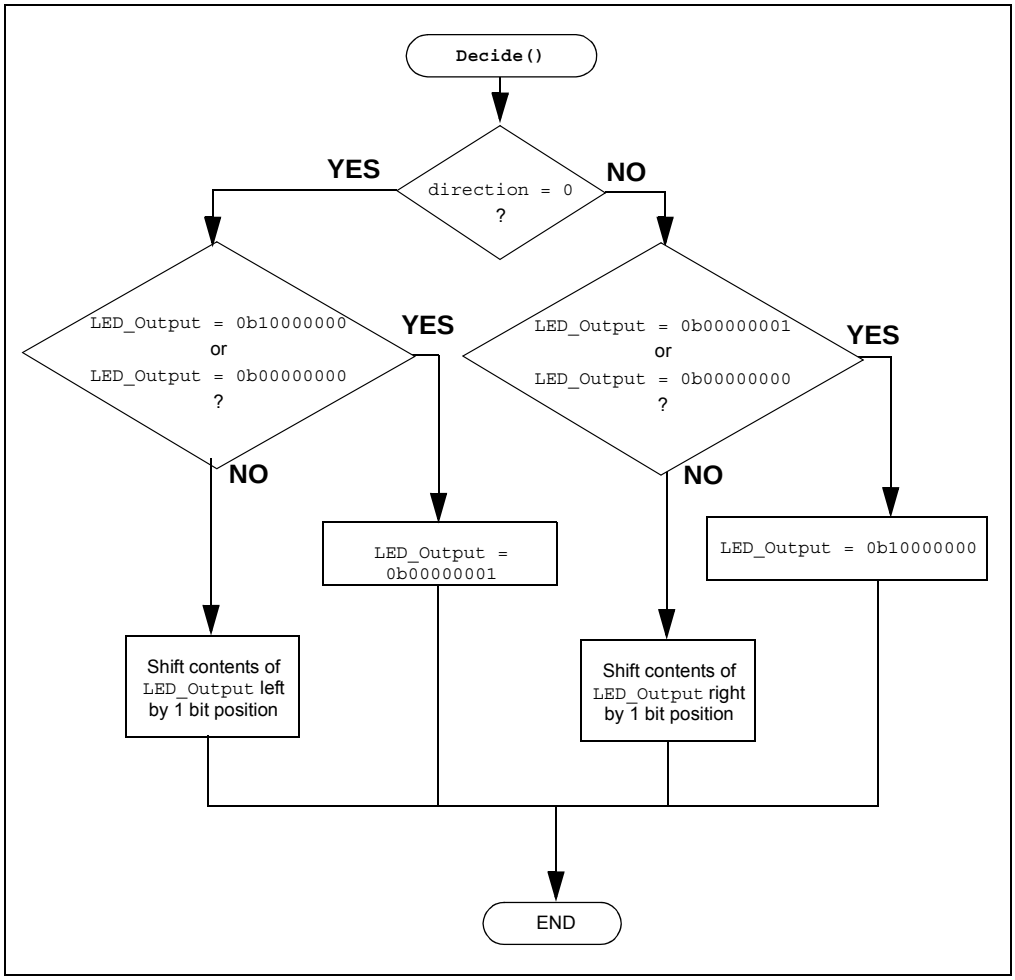

Similar to the previous lab, **`Decide()`** checks the **`LED_Output`** variable value before executing the shift to ensure that the variable is not all `0`'s or that the Most Significant bit, for a left shift, or Least Significant bit, for a right shift, are not '`1`', indicating that the shift that follows will fill the **`LED_Output`** variable with `0`'s.

The **`Do_Outputs()`** simply assigns the contents of the **`LED_Output`** variable to the PORTC register lighting the connected LEDs accordingly.

3.4.4.3 PROCEDURE

Using the firmware developed in the previous lab, make the following changes:

Copy/paste the code in Example 3-16 into the top of the firmware source template under the section marked:

```
//--------------------DATA MEMORY----------------------
```

EXAMPLE 3-16: VARIABLE DECLARATIONS FOR LAB 5

```
unsigned char LED_Output;//Variable used to set/clear PORTC bits

bit direction;//Variable to select direction of shifting LEDs
```

1. Copy/paste the function code in Example 3-17 into the top of the firmware source template under the section marked:
   `/**SUPPORT ROUTINES**********************************`

EXAMPLE 3-17: `DELAY_5MS()` CODE FOR LAB 5

```
/*-------------------------------------------------------
   Subroutine: Delay_5mS
   Parameters: none
   Returns:nothing
   Synopsis:Creates a 5mS delay when called
-------------------------------------------------------*/
void Delay_5mS(void)
{
   //Make sure the T0IF is cleared
   T0IF = 0;

   //preload the TMR0 register
   TMR0 = 100;

   //Sit here and wait for Timer0 to overflow
   while (T0IF == 0);

}
```

2. Copy/paste the code in Example 3-18 into the **`Initialize()`** over the code from the previous lab.

© 2009 Microchip Technology Inc.

EXAMPLE 3-18: `INITIALIZE()` FOR GPIO LAB 5

```
//Clear PORTC to a known state
//Set the least significant bit to 1 so that it can be
//shifted through
PORTC = 0b00000001;

//Clear the PORTA register to a known state
PORTA = 0b00000000;



//Configure PORTC's ANALOG/DIGITAL pins as all Digital
ANS4 = 0;//Associated with RC0
ANS5 = 0;//Associated with RC1
ANS6 = 0;//Associated with RC2
ANS7 = 0;//Associated with RC3
ANS8 = 0;//Associated with RC6
ANS9 = 0;//Associated with RC7

//Configure PORTC pins as all output
//i.e. 1 = Input, 0 = Output
TRISC0 = 0;//Associated with RC0
TRISC1 = 0;//Associated with RC1
TRISC2 = 0;//Associated with RC2
TRISC3 = 0;//Associated with RC3
TRISC4 = 0;//Associated with RC4
TRISC5 = 0;//Associated with RC5
TRISC6 = 0;//Associated with RC6
TRISC7 = 0;//Associated with RC7

//Configure PORTA bit RA0 as Digital input
ANS2 = 0;
TRISA2 = 1;

//Configure Timer0 to overflow every 5mS
T0CS = 0; //Select FOSC/4 as Timer0 clock source
T0SE = 0; //Increment TMR0 on rising clock edge
PSA = 0; //Assign prescaler to Timer0
//Select a 1:32 prescaler
PS0 = 0;
PS1 = 0;
PS2 = 1;

//Initialize the direction flag to shift bits from
//right-to-left
//(i.e. 0 = Shift PORTC bits from right-to-left
//      1 = Shift PORTC bits from left-to-right
direction = 0;

//Initialize LED_Output to all zeros
LED_Output = 0b00000000;
```

3. Copy/paste the code in Example 3-19 into the **`Get_Inputs()`** at the section labeled:
   `//ADD GET_INPUTS CODE HERE`

EXAMPLE 3-19: `GET_INPUTS()` CODE FOR GPIO LAB 5

```
    //Check for a push button press (i.e. RA2 = 0)
    if (RA2 == 0)
    {
       Delay_5mS(); //Delay to debounce

       //Check if push button is still pressed
       if(RA2 == 0) direction ^= 1; //If so, toggle the
                                    //direction bit
    }
    //Otherwise keep direction the same as it was
    else direction = direction;
```

4. Copy/paste the code in Example 3-20 into the **`Decide()`** over the code from the previous lab.

EXAMPLE 3-20: `DECIDE()` CODE FOR GPIO LAB 5

```
    if(direction == 0)
    {
    //First check if LED_Output variable has most
    //significant bit set to 1 or if LED_Output variable is
    //all 0's.
    //If so, re initialize the LED_Output variable so that
    //the most significant bit is set to 1 and all other
    //bits are 0
       if((LED_Output == 0b00000001) || (LED_Output ==
0b00000000)) LED_Output = 0b10000000;

    //If neither of these conditions are true, simply shift
    //the LED_Output variable's contents to the Left by 1
    //bit position
       else LED_Output >>=1;
    }

    else
    {
    //First check if LED_Output variable has the least
    //significant bit set
    //to 1 or if LED_Output variable is all 0's.
    //If so, re initialize the LED_Output variable so that
    //the least significant bit is set to 1 and all other
    //bits are 0
       if((LED_Output == 0b10000000) || (LED_Output ==
0b00000000)) LED_Output = 0b00000001;

    //If neither of these conditions are true, simply shift
    //the LED_Output variable's contents to the Right by 1
    //bit position
       else LED_Output <<=1;
    }
```


© 2009 Microchip Technology Inc.

5. The **Do_Outputs()** code from the previous lab stays the same.
6. Copy/paste the code in Example 3-21 into the **Timing()** over the code from the previous lab.

EXAMPLE 3-21: TIMING() CODE FOR GPIO LAB 5

```
unsigned int delay_var = 9997;

//Keep looping until the delay_var is
// equal to zero (should take 10mS)
while(--delay_var);
```

Note: This lab now utilizes a 10 mS delay to time the software control loop.

7. Copy/paste the code in Example 3-22 over the **main()** code from the previous lab.

EXAMPLE 3-22: MAIN() CODE FOR LAB 5

```
Initialize(); //Initialize the relevant registers

while(1)
{
   Get_Inputs();//Evaluate inputs
   Decide();//Make any decisions
   Do_Outputs(); //Perform any outputs
   Timing();//Sets execution rate of the
             //Software Control Loop
}
```

8. Compile the project, there should be no errors.

3.4.4.4 TESTING THE APPLICATION

Program the PIC16F690. Once programmed, the LEDs connected to PORTC should sequentially light from left-to-right in 10 mS intervals. When the push button is pressed, the LEDs should change directions and sequentially light from right-to-left. Continuously pressing the push button will change the direction each time.

It should be noted that the push button press inconsistently changes the direction of sequential flashing. The problem here is that the firmware performs a technique called "Polling" to check the state of the RA0 pin that connects to the push button. Therefore, the state of RA0 is checked only once each time through the software control loop when the **Get_Inputs()** is called. This polling is subject to the timing of the software control loop and will lead to push button presses being missed. If the **Timing()** remained at the 1 second delay as implemented in the previous lab, this would have made matters worse. The next labs will remedy these issues through the use of interrupts.

The solution for this project is located in the `C:\PICDEM_Lab\GPIO_Labs\GPIO_Lab5\solution` directory.

3.4.5 Lab 6: Push Button Interrupt

3.4.5.1 NEW REGISTERS USED IN THIS LAB

To configure the peripherals used in this lab, the following registers are used:

1. OPTION Register: OPTION (Register 2-2 in Section 2 of the PIC16F690 Data Sheet)
   - Selects the edge transition on RA2/INT that will trigger an interrupt.
2. Interrupt Control Register: INTCON (Register 2-3 in Section 2 of the PIC16F690 Data Sheet)
   - Enable interrupt functionality on the PIC16F690.
   - Enables the RA2/INT external interrupt.
   - Contains a flag that indicates the external interrupt has occurred.

3.4.5.2 OVERVIEW

This lab expands upon Lab 5 by adding an interrupt that will occur each time the push button connected to the RA2 pin is pressed.

As mentioned, polling a bit is heavily reliant on a number of factors such as the size of the firmware and the timing of the software control loop. Polling does have its uses. However, there may be times when an event, such as pressing a push button, requires immediate attention. This is where the interrupt comes in. As the name implies, an interrupt acts as a sort of alarm. When the Central Processing Unit receives an interrupt, it immediately stops what it is doing, saves where in the code it was before the interrupt, performs code or firmware defined by the user in the event of an interrupt called an Interrupt Service Routine (ISR), and then returns to the previous task it was performing prior to the interrupt.

So, why not use interrupts all the time? The answer is mainly cost. In order to implement an interrupt for a specific function, the user may need to purchase a microcontroller with a peripheral that accommodates the interrupt. This increases the cost of the application. In some cases, polling a bit may be the way to go. Other cases may require the interrupt thereby justifying the added cost of a particular peripheral.

The RA2 pin associated with the PORTA register features an external edge-triggered interrupt capability (note the INT designation on the PIC16F690 Pin Diagram in Table 5 of the data sheet). The interrupt is configurable to occur on either the rising-edge (i.e., signal on RA2 pin transitions from low-to-high) or the falling-edge (i.e., signal on RA2 pin transitions from high-to-low) of the voltage on the RA2 pin. If the selected edge transition is detected on RA2, the CPU then services the interrupt before returning to the code it was executing prior to the interrupt. Referring again to Figure 3-12, the push button connected to the RA2 pin is pulled high when not pressed. Therefore, the interrupt will be configured to trigger on the high-to-low transition indicating a push button press.

The INTCON register contains the enable (INTE) and flag (INTF) bits for the RA2 external interrupt. These bits indicate to firmware the condition that caused an interrupt to occur. The other bits and accompanying registers are used for other peripheral features on the microcontroller. The Global Interrupt Enable bit (GIE) is a sort of master switch that allows interrupts, if individually enabled, to be used by the microcontroller.

The OPTION register features the Interrupt Edge Select (INTEDG) bit that will be used to indicate the edge transition that will trigger an interrupt.

The software flowchart for this lab is shown in Figure 3-23.

© 2009 Microchip Technology Inc.

FIGURE 3-23: `MAIN()` SOFTWARE CONTROL LOOP FLOWCHART FOR GPIO LAB 6

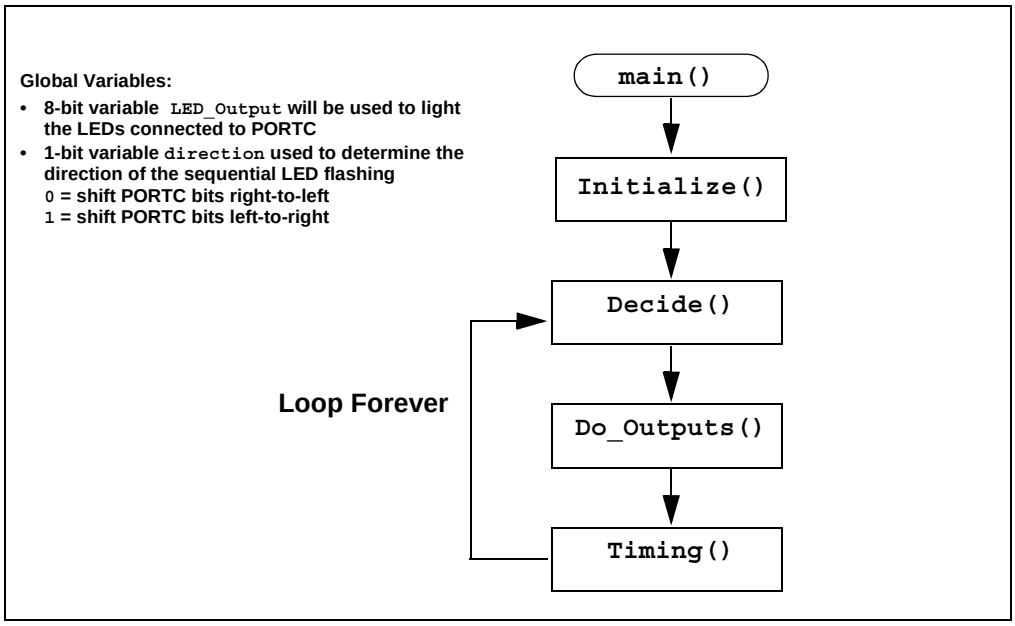

Note the removal of the `Get_Inputs()` from the previous lab. This code will now be handled by an Interrupt Service Routine (ISR) whenever the push button is pressed. The `PB_PressISR()` flowchart is shown in Figure 3-24.

FIGURE 3-24: `PB_PRESSISR()` FOR LAB 6 SHOWING SWITCH DEBOUNCE

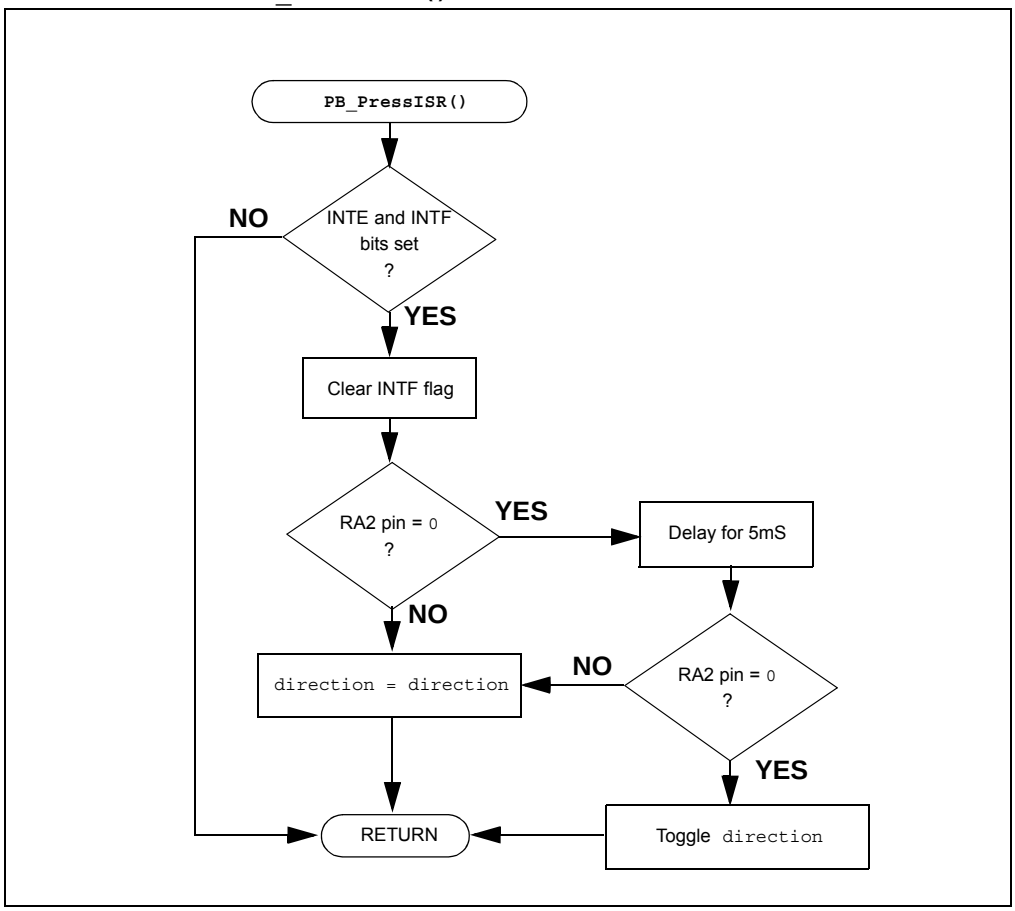

Referring to the flowchart in Figure 3-24, the **PB_PressISR()** replaces the **Get_Inputs()** used in Lab 4 with a few additions. At the beginning of the ISR, the INTE and INTF bits are first checked to ensure that the RA2/INT external interrupt is indeed enabled and that the flag is set indicating that an RA2/INT external interrupt has occurred. Determining the source of an interrupt becomes especially important if multiple peripherals are configured to cause an interrupt. The ISR then clears the RA2/INT external interrupt flag so that subsequent interrupts will be registered. The ISR then performs the RA2 check along with the debounce routine that was discussed in the previous lab.

3.4.5.3 PROCEDURE

Using the firmware developed in the previous lab, make the following changes:

1. Copy/paste the Interrupt Service Routine in Figure 3-23 at the top of the firmware source file under the section labeled:
   /INTERRUPT CODE***/**

EXAMPLE 3-23: PB_PRESSISR() CODE FOR GPIO LAB 6

```
/*-------------------------------------------------------
-
   Subroutine: Interrupt Service Routine
   Parameters: none
   Returns:nothing
   Synopsis:Execute this code on any interrupt
-------------------------------------------------------*/

void interrupt PB_PressISR(void)
{
   //Check to see if the interrupt was caused by
   //the external interrupt on RA2
   //If so, clear the external interrupt flag
   //to allow subsequent interrupts to be detected
   if(INTE && INTF) INTF = 0;

   //Check to see if the RA2 pin is 0
   //(i.e. push button pressed)
   if(RA2 == 0)
   {
      //If RA2 is 0 delay for 5mS to filter
      //any switch bounce
      Delay_5mS();

      //Check to see if RA2 is still 0
      //If so, toggle the direction bit
      if(RA2 == 0) direction ^= 1;
   }

   //If RA2 is not 0, keep direction value
   //the same as it was
   else direction = direction;

}
```


© 2009 Microchip Technology Inc.

> **Note:** To indicate a function that should be used whenever an interrupt occurs, the `interrupt` function qualifier is needed. This qualifier is specific to the HI-TECH C® Compiler.

2. Copy/paste the code in Example 3-24 into the `Initialize()` over the code from the previous lab.

EXAMPLE 3-24: `INITIALIZE()` CODE FOR GPIO LAB 6

```
//Clear PORTC to a known state
//Set the least significant bit to 1 so that it can be
//shifted through
   PORTC = 0b00000001;
//Clear the PORTA register to a known state
   PORTA = 0b00000000;
//Configure PORTC's ANALOG/DIGITAL pins as all Digital
   ANS4 = 0;//Associated with RC0
   ANS5 = 0;//Associated with RC1
   ANS6 = 0;//Associated with RC2
   ANS7 = 0;//Associated with RC3
   ANS8 = 0;//Associated with RC6
   ANS9 = 0;//Associated with RC7
//Configure PORTC pins as all output
//i.e. 1 = Input, 0 = Output
   TRISC0 = 0;//Associated with RC0
   TRISC1 = 0;//Associated with RC1
   TRISC2 = 0;//Associated with RC2
   TRISC3 = 0;//Associated with RC3
   TRISC4 = 0;//Associated with RC4
   TRISC5 = 0;//Associated with RC5
   TRISC6 = 0;//Associated with RC6
   TRISC7 = 0;//Associated with RC7

//Configure PORTA bit RA0 as Digital input
   ANS2 = 0;
   TRISA2 = 1;

//Configure Timer0 to overflow every 5mS
   T0CS = 0; //Select FOSC/4 as Timer0 clock source
   T0SE = 0; //Increment TMR0 on rising clock edge
   PSA = 0; //Assign prescaler to Timer0
//Select a 1:32 prescaler
   PS0 = 0;
   PS1 = 0;
   PS2 = 1;

//Initialize the direction flag to shift bits from
//right-to-left
//(i.e. 0 = Shift PORTC bits from right-to-left
//      1 = Shift PORTC bits from left-to-right
   direction = 0;
//Initialize LED_Output to all zeros
   LED_Output = 0b00000000;

//Configure for external interrupts on RA2
   INTEDG = 0; //Interrupt to occur on High-to-LOW
               //transition of RA2 voltage
   INTE = 1; //Enable the external interrupt
   INTF = 0; //Clear the external interrupt flag
   GIE = 1;//Enable interrupt capability on the
               //PIC16F690 ***ALWAYS DONE LAST*****
```

It should be noted that the Global Interrupt Enable bit (GIE) is set last in the Example 3-24. This ensures that interrupts will not occur during the **`Initialize()`**, having adverse consequences on code operation.

© 2009 Microchip Technology Inc.

3. Copy/paste the code in Example 3-25 into the **`main()`** over the code from the previous lab to remove the **`Get_Inputs()`**.

EXAMPLE 3-25: `MAIN()` CODE FOR GPIO LAB 6

```
Initialize(); //Initialize the relevant registers

while(1)
{

    Decide();//Make any decisions
    Do_Outputs(); //Perform any outputs
    Timing();//Sets execution rate of the
              //Software Control Loop
}
```

4. The remaining code remains unchanged from the previous lab. Compile the project. There should be no errors.

3.4.5.4 TESTING THE APPLICATION

Program the PIC16F690. The application should behave as it did in the previous lab. Only this time, the change in LED flashing direction should now be more responsive to push button presses due to the interrupt added.

The solution for this project is located in the `C:\PICDEM_Lab\GPIO_Labs\GPIO_Lab6\solution` directory.

3.4.6 Lab 7: Push Button Interrupt-on-Change

3.4.6.1 NEW REGISTERS USED IN THIS LAB

To configure the peripherals used in this lab, the following registers are used:

1. Interrupt-on-Change PORTA Register: IOCA (Register 4-6 in Section 4 of the PIC16F690 Data Sheet).
   - Configures PORTA associated pins that will generate an interrupt when a change in voltage level is detected.
2. Interrupt Control Register: INTCON (Register 2-3 in Section 2 of the PIC16F690 Data Sheet)
   - Enable interrupt functionality on the PIC16F690.
   - Enables PORTA/PORTB change interrupts.
   - Contains a flag that indicates that a PORTA or PORTB change interrupt has occurred.

3.4.6.2 OVERVIEW

This lab adds a different kind of interrupt associated with the General Purpose Input/Output peripheral called interrupt-on-change. Rather than simply interrupting the CPU on a single edge transition on the RA2 pin, an interrupt will now occur on any edge transition. Therefore, when the push button is pressed and/or released, an interrupt will occur. This lab will use these concepts to shift the flashing LEDs from left-to-right while the push button is pressed and from right-to-left when the push button is released.

Each PORTA and PORTB pin is individually configurable as an interrupt-on-change pin. Control bits in the Interrupt-on-Change PORTA register (IOCA) enable or disable the interrupt function for each pin.

The INTCON register is needed as well to implement the interrupt-on-change feature. Again the GIE bit needs to be set to enable any interrupts used on the microcontroller. To configure for an interrupt-on-change, the PORTA/PORTB Change Interrupt Enable bit (RABIE) must be set along with the individual enable bits in the IOCA register. On an interrupt-on-change for configured pins, the PORTA/PORTB Change Interrupt Flag bit (RABIF) will be set. To detect a logic change on a port pin, the firmware needs to know what has changed. Therefore, PORTA must be read before an interrupt-on-change can occur. Reading PORTA retains, or latches, the current value on the RA2 pin for later reference. In the event that the signal on the RA2 pin changes and a mismatch with the reference value occurs, an interrupt will result.

The **`main()`** software flowchart for this lab remains the same as that in Figure 3-24 of the previous lab. The Interrupt Service Routine changes since it now must determine whether the interrupt occurred due to a high-to-low or low-to-high transition on pin RA2. The ISR flowchart is shown in Figure 3-25.

FIGURE 3-25: `PB_PRESSISR` FLOWCHART FOR LAB 7

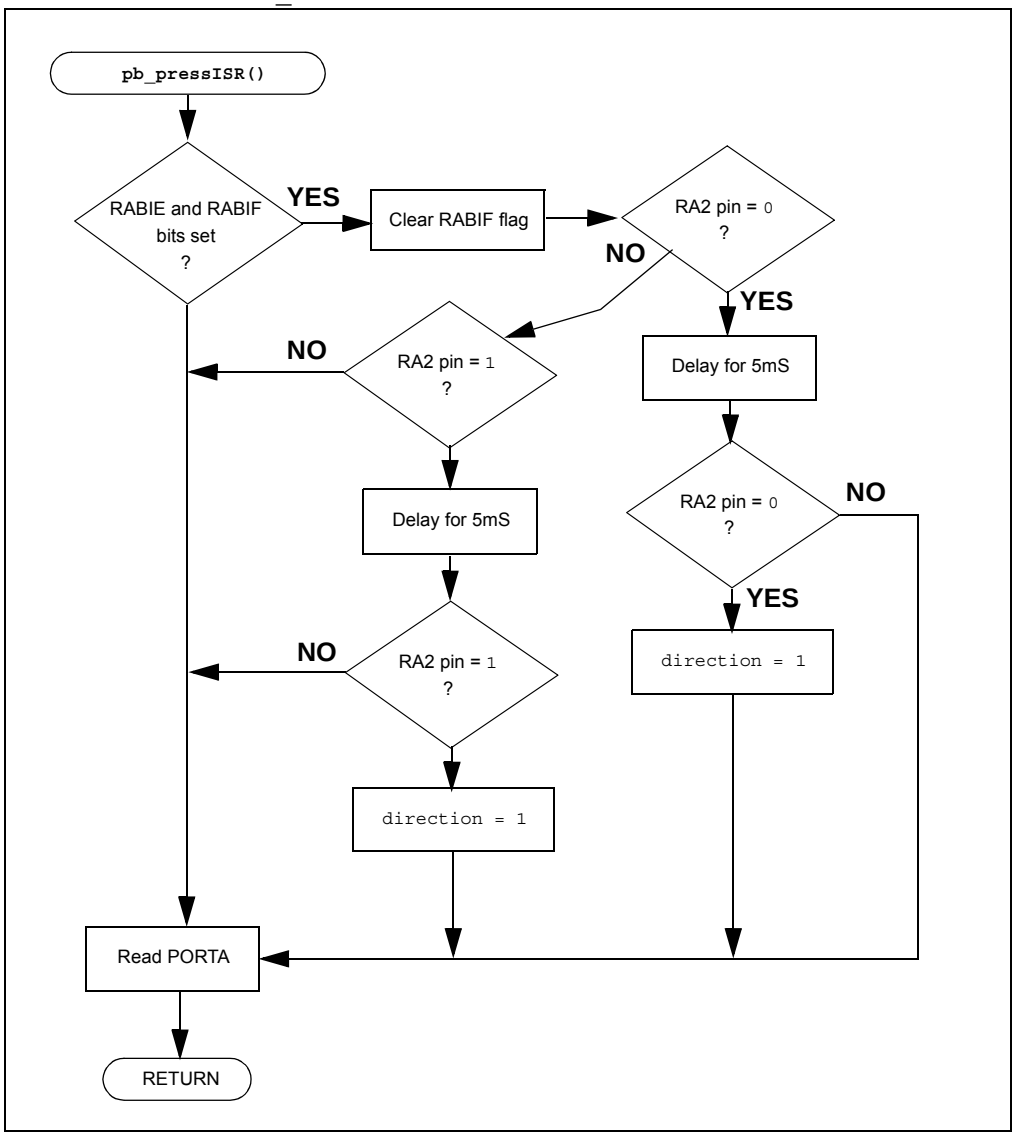

© 2009 Microchip Technology Inc.

The **PB_PressISR()** now checks to see if the voltage level on RA2 has changed state from a 1-to-0 or from 0-to-1. Each condition will change the direction that the LEDs flash sequentially. Note that the **direction** bit toggle used in previous labs has been replaced by assigning either a '1' for the left-to-right direction or '0' for the right-to-left direction. As discussed earlier, the PORTA register must be read before the first interrupt can occur and at the end of each subsequent ISR execution to ensure that the microcontroller has an up-to-date reference to measure the current state of the RA2 pin.

The **Initialize()** for this lab configures the peripherals and interrupts as follows:

- PORTC
  - Clears PORTC
  - Configures all pins as digital output
- PORTA
  - Clears PORTA
  - Configures RA2 as a digital input
- Timer0
  - Uses the FOSC/4 as clock source
  - Increment TMR0 on rising FOSC/4 clock edge
  - Use Prescaler at 1:32
- Global Variables
  - Initialize **direction** to '0'
  - Initialize **LED_Output** to '0'
- Interrupt
  - Enable RA2 Interrupt-on-Change
  - Enable change interrupts in INTCON by setting the RABIE bit
  - Clear the RABIF change interrupt flag in INTCON
  - Enable Global Interrupts by setting GIE
  - Read PORTA to latch current value on RA2 for reference

3.4.6.3 PROCEDURE

Using the firmware developed in the previous lab, make the following changes:

1. Copy/paste the code in Example 3-26 into the **PB_PressISR()** over the code from the previous lab.

EXAMPLE 3-26: `PB_PRESSISR()` CODE FOR GPIO LAB 7

```
//First, check if the interrupt occurred as a result of an
//RA2 change interrupt. If so, clear the RABIF flag so
//that subsequent interrupts can occur
if(RABIE && RABIF) RABIF = 0;
//Check the push button connected to RA0 pin. If 0, then a
//push button press is indicated
   if(RA2 == 0)
   {
      //Delay for 5mS to filter switch bounce
      Delay_5mS();

//if RA2 is still 0 then change the direction flag
      if (RA2 == 0) direction = 1;
   }

//Check the push button connected to RA0 pin. If 1, then a
//push button release is indicated
   if(RA2 == 1)
   {
      //Delay for 5mS to filter switch bounce
      Delay_5mS();
//if RA2 is still 1 then change the direction flag
      if (RA2 == 1) direction = 0;

   }
//Otherwise, keep the direction bit the same as it was
      else direction = direction;

//Read PORTA to latch RA2 value for the next interrupt
   PORTA = PORTA;
```

2. Copy/paste the code in Example 3-27 into the **`Initialize()`** over the code from the previous lab.

© 2009 Microchip Technology Inc.

EXAMPLE 3-27: `INITIALIZE()` CODE FOR GPIO LAB 7

```
//Clear PORTC to a known state
//Set the least significant bit to 1 so that it can be
//shifted through
   PORTC = 0b00000001;

//Clear the PORTA register to a known state
   PORTA = 0b00000000;

//Configure PORTC's ANALOG/DIGITAL pins as all Digital
   ANS4 = 0;//Associated with RC0
   ANS5 = 0;//Associated with RC1
   ANS6 = 0;//Associated with RC2
   ANS7 = 0;//Associated with RC3
   ANS8 = 0;//Associated with RC6
   ANS9 = 0;//Associated with RC7

//Configure PORTC pins as all output
//i.e. 1 = Input, 0 = Output
   TRISC0 = 0;//Associated with RC0
   TRISC1 = 0;//Associated with RC1
   TRISC2 = 0;//Associated with RC2
   TRISC3 = 0;//Associated with RC3
   TRISC4 = 0;//Associated with RC4
   TRISC5 = 0;//Associated with RC5
   TRISC6 = 0;//Associated with RC6
   TRISC7 = 0;//Associated with RC7

//Configure PORTA bit RA0 as Digital input
   ANS2 = 0;
   TRISA2 = 1;

//Configure Timer0 to overflow every 5mS
   T0CS = 0; //Select FOSC/4 as Timer0 clock source
   T0SE = 0; //Increment TMR0 on rising clock edge
   PSA = 0; //Assign prescaler to Timer0
//Select a 1:32 prescaler
   PS0 = 0;
   PS1 = 0;
   PS2 = 1;

//Initialize the direction flag to shift bits from right-to-left
//(i.e. 0 = Shift PORTC bits from right-to-left
//      1 = Shift PORTC bits from left-to-right
   direction = 0;

//Initialize LED_Output to all zeros
   LED_Output = 0b00000000;

//Configure for RA2 Interrupt-On-Change
   IOCA2 = 1; //Enable RA2 interrupt-on-change
   RABIE = 1; //Enable change interrupts
   RABIF = 0; //Clear the change interrupt flag
   GIE = 1;//Enable interrupt capability on the
             //PIC16F690 ***ALWAYS DONE LAST*****

   //Read PORTA to latch the current RA2 voltage level
   PORTA = PORTA;
```

3. All remaining code from the previous lab is unchanged. Compile the project. There should be no errors.

3.4.6.4 TESTING THE APPLICATION

Program the PIC16F690. The LEDs connected to PORTC should now flash sequentially from left-to-right when the push button is released and flash from right-to-left when the push button is pressed.

The solution for this project is located in the `C:\PICDEM_Lab\GPIO_Labs\GPIO_Lab7\solution` directory.

3.4.7 Lab 8: Using Weak Pull-Ups

3.4.7.1 NEW REGISTERS USED IN THIS LAB

To configure the peripherals used in this lab, the following registers are used:

1. OPTION Register: OPTION (Register 2-2 in Section 2 of the PIC16F690 Data Sheet)
   - Enables PORTA/PORTB weak pull-ups to be used on the PIC16F690.
2. PORTA Weak Pull-Up Register: WPUA (Register 4-5 in Section 4 of the PIC16F690 Data Sheet)
   - Selects which PORTA pins will have weak pull-ups enabled.

3.4.7.2 OVERVIEW

This lab expands on the previous lab by adding weak pull-ups to remove the 10 KΩ used previously to tie RA2 pin to VDD. Each of the PORTA pins (except RA3) and PORTB pins, has an individually configurable internal weak pull-up. Essentially, these weak pull-ups perform the same task as the resistor connected to the RA2 pin and push button as shown in Figure 3-12 only internal to the microcontroller. This feature can be used to decrease component counts in the circuit.

Clearing the PORTA/PORTB Pull-up Enable bit, $\overline{\text{RABPU}}$, in the OPTION register will enable weak pull-ups on any PORTA pin selected using the Weak Pull-Up PORTA register (WPUA).

The only change needed to the PICDEM Lab Development Board Schematic shown in Figure 3-18 is to remove the 10 KΩ resistor connected to both the push button and pin RA2.

The **`Initialize()`** is all that needs to be changed in firmware by adding the following configurations:

- Select RA2 to have a weak pull-up by setting the Weak Pull-Up Register bit WPUA2 in the WPUA: PORTA Register.
- Enable the PORTA/PORTB Pull-up Enable bit ($\overline{\text{RABPU}}$) in the OPTION register by clearing it.

3.4.7.3 PROCEDURE

Using the firmware developed in the previous lab, make the following changes:

1. Copy/paste the code in Example 3-28 into the **`Initialize()`** over the code from the previous lab.

© 2009 Microchip Technology Inc.

EXAMPLE 3-28: `INITIALIZE()` CODE FOR GPIO LAB 8

```
//Clear PORTC to a known state
//Set the least significant bit to 1 so that it can be
//shifted through
   PORTC = 0b00000001;

//Clear the PORTA register to a known state
   PORTA = 0b00000000;

//Configure PORTC's ANALOG/DIGITAL pins as all Digital
   ANS4 = 0;//Associated with RC0
   ANS5 = 0;//Associated with RC1
   ANS6 = 0;//Associated with RC2
   ANS7 = 0;//Associated with RC3
   ANS8 = 0;//Associated with RC6
   ANS9 = 0;//Associated with RC7
//Configure PORTC pins as all output
//i.e. 1 = Input, 0 = Output
   TRISC0 = 0;//Associated with RC0
   TRISC1 = 0;//Associated with RC1
   TRISC2 = 0;//Associated with RC2
   TRISC3 = 0;//Associated with RC3
   TRISC4 = 0;//Associated with RC4
   TRISC5 = 0;//Associated with RC5
   TRISC6 = 0;//Associated with RC6
   TRISC7 = 0;//Associated with RC7

//Configure PORTA bit RA0 as Digital input
   ANS2 = 0;
   TRISA2 = 1;

//Enable Weak Pull-ups on RA2
   WPUA2 = 1;
   RABPU = 0; //Enable PORTA/PORTB Pull-ups

//Configure Timer0 to overflow every 5mS
   T0CS = 0; //Select FOSC/4 as Timer0 clock source
   T0SE = 0; //Increment TMR0 on rising clock edge
   PSA = 0; //Assign prescaler to Timer0
   //Select a 1:32 prescaler
   PS0 = 0;
   PS1 = 0;
   PS2 = 1;

//Initialize the direction flag to shift bits from right-to-left
//(i.e. 0 = Shift PORTC bits from right-to-left
//      1 = Shift PORTC bits from left-to-right
   direction = 0;
//Initialize LED_Output to all zeros
   LED_Output = 0b00000000;

//Configure for RA2 Interrupt-On-Change
   IOCA2 = 1; //Enable RA2 interrupt-on-change
   RABIE = 1; //Enable change interrupts
   RABIF = 0; //Clear the change interrupt flag
   GIE = 1;//Enable interrupt capability on the
             //PIC16F690 ***ALWAYS DONE LAST*****
//Read PORTA to latch the current RA2 voltage level
   PORTA = PORTA;
```

3.4.7.4 TESTING THE APPLICATION

Program the PIC16F690. The application should operate exactly as it did in the previous lab. Only this time with the absence of the 10 KΩ pull-up resistor.

The solution for this project is located in the `C:\PICDEM_Lab\GPIO_Labs\GPIO_Lab8\solution` directory.

© 2009 Microchip Technology Inc.

Chapter 4. Comparator Peripheral Labs

4.1 INTRODUCTION

The following labs cover some of the fundamental features of the Comparator 1 peripheral found on the PIC16F690 including some unique applications. These peripherals are very useful mixed signal building blocks as they provide analog functionality independent of program execution. The labs in this section will demonstrate this functionality, then introduce intelligence to implement a relatively high resolution temperature sensor measurement application.

4.2 COMPARATOR LABS

4.2.1 Reference Documentation

All documentation is available on the PICDEM™ Lab Development Kit accompanying CD-ROM:

- PIC16F690 Data Sheet (DS41262)
  - Section 4.0: I/O Ports
  - Section 5.0: Timer0 Module
  - Section 6.0: Timer1 Module
  - Section 8.0: Comparator Module
- *"Introduction to MPLAB® IDE and HI-TECH C® PRO for the PIC10/12/16 MCU Family Lite Mode Compiler Tutorial"* (DS41322)

4.2.2 Comparator Labs

The labs that will be implemented in this chapter are:

- Lab 1: Simple Comparator
- Lab 2: Using the Internal Comparator Voltage Reference
- Lab 3: Higher Resolution Sensor Readings Using a Single Comparator

4.2.3 Equipment Required

To complete the labs in this section, the following components are required:

1. 2 – 10 KΩ resistors
2. 4 – 470Ω resistor
3. 1 – 100 KΩ potentiometer
4. 4 – Light Emitting Diodes
5. 1 – 1N4148 diodes
6. 1 – 1 μF capacitor
7. PIC16F690 populating socket U2
8. Assorted jumper wires

4.2.4 Lab 1: Simple Compare

4.2.4.1 NEW REGISTERS USED IN THIS LAB

To configure the peripherals used in this lab, the following registers are used:

1. Comparator C1 Control Register 0: CM1CON0 (Register 8-1 in Section 8 of the PIC16F690 Data Sheet)
   - Enables Comparator C1.
   - Configures Comparator output polarity.
   - Enables the Comparator result to be available internal only or on the C1OUT pin (pin 17).
   - Select inverting and non-inverting Comparator 1 reference input sources.

4.2.4.2 OVERVIEW

In this lab, Comparator 1 on the PIC16F690 is configured to perform a simple compare. A potentiometer connected to the inverting input (C12IN0-) of the comparator will be compared against the 2.5V connected to the non-inverting input (C1IN+) from a simple voltage divider circuit. An LED connected to the output of Comparator 1 (C1OUT) will light or turn off as follows:

- inverting reference > non-inverting reference = C1OUT is low = LED OFF
- inverting reference < non-inverting reference = C1OUT is high = LED ON

The PICDEM™ Development Board configuration schematic is shown in Figure 4-1.

FIGURE 4-1: SCHEMATIC FOR COMPARATOR LAB 1

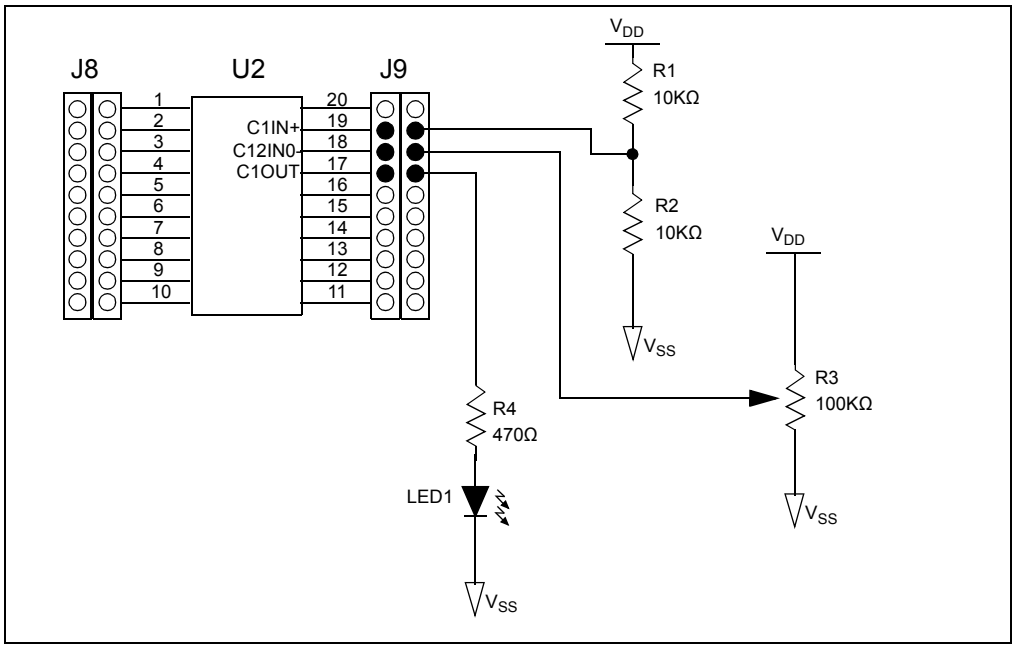

The software flowchart for this lab is shown in Figure 4-2.

© 2009 Microchip Technology Inc.

FIGURE 4-2: `MAIN()` SOFTWARE CONTROL LOOP FLOWCHART FOR COMPARATOR LAB 1

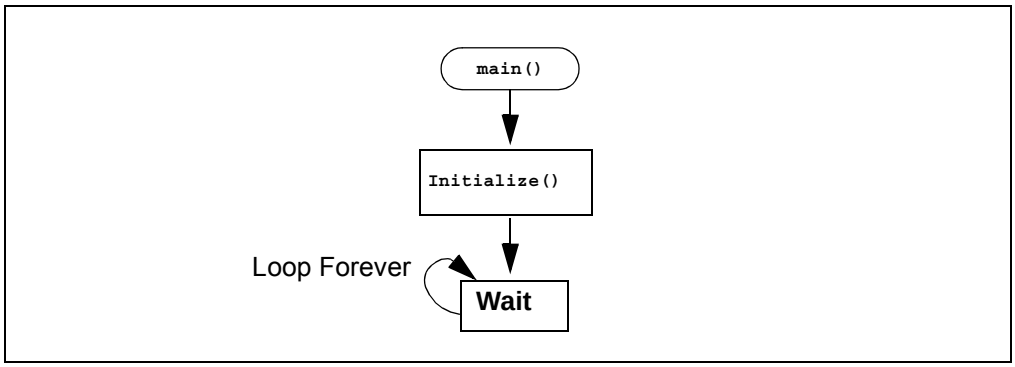

As mentioned in the introduction, comparators on the PIC16F690 are able to function independent of software logic. Therefore, all that is needed is to call the **`Initialize()`** from **`main()`** to activate the peripheral. The **`Initialize()`** configures Comparator 1 as follows:

- Turn on Comparator 1
- Make the Comparator 1 output available on the C1OUT pin
- Select pin C1IN+ as the non-inverting reference
- Select pin C12IN0- as the inverting reference
- Configure the C1OUT pin as an output

4.2.4.3 PROCEDURE

Using the Project Wizard, create a new project using the PIC16F690 entitled `Comparator_Lab1.mcp` as was done in previous labs. Once completed, open the `Comparator_Lab2.c` source file in MPLAB and do the following:

1. Copy/paste the code in Example 4-1 into the **`Initialize()`** section labeled: **`//ADD INITIALIZE CODE HERE`**

EXAMPLE 4-1: INITIALIZE CODE FOR COMPARATOR LAB 1

```
//Initialize Comparator 1 as follows:

//Turn comparator 1 on
C1ON = 1;

//Make the comparator output available on the
//C1OUT pin
C1OE = 1;

//Select the non-inverting pin (C1IN+) as the
//non-inverting reference input for the comparator 1
C1R = 0;

//Select the C12IN0- pin as the inverting reference
C1CH0 = 0;
C1CH1 = 0;

//Since the comparator 1 output shares the same pin
//as PORTA bit 2, configure the corresponding TRISA2 bit
//as an output
TRISA2 = 0;
```

2. Copy/paste the code in Example 4-2 into the **`main()`** section labeled: **`//ADD MAIN CODE HERE`**

EXAMPLE 4-2: `MAIN()` CODE FOR COMPARATOR LAB 1

```
Initialize(); //Initialize the relevant registers
while(1);
```

> **Note:** The inclusion of the `while` loop forces the microcontroller to sit and wait at a "known" instruction. At start-up, the contents of the program memory are unknown. Without the `while` loop, the microcontroller will continue to run through each address in program memory executing whatever resides at a particular address. This could have adverse effects on the application.

3. Compile the project. There should be no errors.

4.2.4.4 TESTING THE APPLICATION

Program the PIC16F690. The LED connected to the C1OUT pin should light when the voltage present on the C12IN0- pin is less than the 2.5V present on the C1IN+ pin and turn off when the 2.5V is exceeded.

The solution for this project is located in the `C:\PICDEM_Lab\Comparator_Labs\Comparator_Lab1\solution` directory.

> **Note:** This application uses two pins that are used during the programming process (ICSPDATA and ICSPCLK). The jumper wires connecting these pins to the application circuit may need to be disconnected while programming if there are problems with the MPLAB IDE connecting to the PIC16F690.

4.2.5 Lab 2: Using the Comparator Voltage Reference

4.2.5.1 NEW REGISTERS USED IN THIS LAB

To configure the peripherals used in this lab, the following registers are used:

1. Voltage Reference Control Register: VRCON (Register 8-5 in Section 8 of the PIC16F690 Data Sheet).
   - Enables either the Comparator Voltage Reference or the 0.6V constant reference as the non-inverting reference input to Comparator C1 or Comparator C2.
   - Selects either a High or Low resolution 16-level voltage range.
   - Enable a 0.6V reference.
   - Uses three bits to configure the reference voltage level.

4.2.5.2 OVERVIEW

This lab expands on Lab 1 by utilizing the internal Comparator Voltage Reference (CV_{REF}) feature on the PIC16F690. The CV_{REF} provides an internally generated voltage reference that can be used by the Comparator 1 non-inverting reference input so that external components are not needed such as the resistor voltage divider used in the previous lab. The CV_{REF} features:

- Independent comparator operation
- Two 16-level voltage ranges
- Ratiometric with V_{DD}

© 2009 Microchip Technology Inc.

- Fixed 0.6 reference option
- Output clamped to V_{SS}

The CV_{REF} has 2 ranges with 16 voltage levels in each range. Range selection is controlled by the CV_{REF} Range Selection (VRR) bit in the VRCON (Voltage Reference Control Register) along with the CV_{REF} Value Selection bits (VR<3:0>). The Value Selection bits hold a value based upon some simple calculations to set the internal reference voltage. The CV_{REF} voltage is determined using Equation 4-1:

EQUATION 4-1: CV_{REF} OUTPUT VOLTAGE

VRR = 1 (Low-Range):

$$CV_{REF} = (VR<3:0>/24) \times V_{DD}$$

VRR = 0 (High-Range):

$$CV_{REF} = (V_{DD}/4) + (VR<3:0> \times V_{DD}/32)$$

This lab will implement the low-range calculation by setting the VRR bit in VRCON equal to 1. Equation 4-2 demonstrates how to calculate the VR<3:0> values, using the low-range method, to obtain a 2.5V internal reference. If higher resolutions are required, the high-range method should be used (see Section 8.10.2 in the PIC16F690 Data Sheet (DS-41262).

EQUATION 4-2: CALCULATING A 2.5V INTERNAL REFERENCE (LOW-RANGE METHOD)

VRR = 1 (Low-Range):

$$CV_{REF} = (VR<3:0>/24) \times V_{DD}$$

Known: desired CV_{REF} = 2.5V, V_{DD} approximately 5V

Therefore:

$$2.5V = (VR<3:0>/24 \times 5V$$

$$2.5V/5V = (VR<3:0>/24)$$

$$(2.5V/5V) \times 24 = VR<3:0>$$

$$VR<3:0> = 12_{10} \text{ or } 1100_2$$

VR0 = 0
VR1 = 0
VR2 = 1
VR3 = 1

The `Initialize()` from the previous lab now must configure both the Comparator 1 peripheral and the CV_{REF} as follows:

- Turn on Comparator 1
- Select CV_{REF} the non-inverting reference for Comparator 1
- Continue to use the C12IN0- pin as the inverting reference
- Turn on CV_{REF}
- Select the low-range feature
- Set the CV_{REF} Value Selection bits as per the calculation in Equation 4-2.

Changes to the PICDEM™ Development Board configuration schematic for this lab are shown in Figure 4-3.

FIGURE 4-3: SCHEMATIC FOR COMPARATOR LAB 2

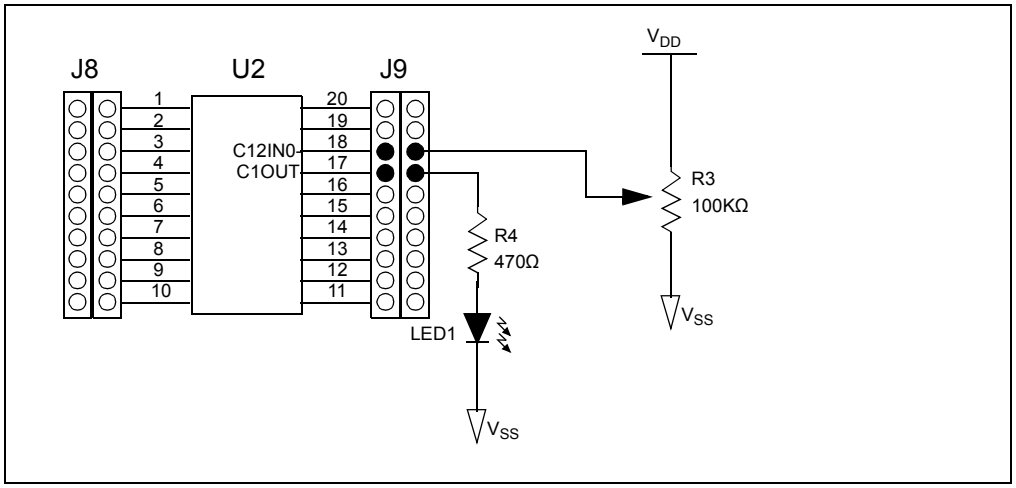

4.2.5.3 PROCEDURE

Using the firmware developed in the previous lab, make the following changes:

1. Copy/paste the code in Example 4-3 into the `Initialize()` over the code from the previous lab.

© 2009 Microchip Technology Inc.

EXAMPLE 4-3: INITIALIZE CODE FOR COMPARATOR LAB 2

```
//Intialize Comparator 1 as follows:

//Turn comparator 1 on
C1ON = 1;

//Make the comparator output available on the
//C1OUT pin
C1OE = 1;

//Select the internal voltage reference
//as the non-inverting reference voltage
C1R = 1;

//Select the C12IN0- pin as the inverting reference
C1CH0 = 0;
C1CH1 = 0;

//Initialize the internal voltage reference as follows:

//Turn on the CVref output and route to the C1Vref input
//of comparator 1
C1VREN =  1;

//Use the comparator voltage low range feature
VRR = 1;

//Set the comparator voltage reference value selection
//to 2.5V by making the VR<3:0> bits equal to 12 or
//binary 1100 (see lab manual for equations)
VR0 = 0;
VR1 = 0;
VR2 = 1;
VR3 = 1;

//Since the comparator 1 output shares the same pin
//as PORTA bit 2, configure the corresponding TRISA2 bit
//as an output
TRISA2 = 0;
```

2. The **`main()`** stays the same as the previous lab.
3. Compile the project. There should be no errors.

4.2.5.4 TESTING THE APPLICATION

Program the PIC16F690. The application should behave exactly as it did in the previous lab with the exception of less components used.

The solution for this project is located in the `C:\PICDEM_Lab\Comparator_Labs\Comparator_Lab2\solution` directory.

4.2.6 Lab 3: Higher Resolution Sensor Readings Using a Single Comparator

4.2.6.1 NEW REGISTERS USED IN THIS LAB

To configure the peripherals used in this lab, the following registers are used:

1. Timer1 Control Register: T1CON (Register 6-1 in Section 6 of the PIC16F690 data sheet)
   - This register is used to control Timer1 and select various features of the module. In this lab the register will be used to enable Timer1 and select the clock source.

4.2.6.2 OVERVIEW

This lab expands on concepts discussed in the previous comparator lab by implementing intelligence to create a higher resolution temperature sensor measurement application. The comparator will be configured to operate as a simple relaxation oscillator with the addition of a few external components. The internal voltage reference will still be used to provide the non-inverting reference only this time the 0.6V fixed voltage reference feature will be implemented.

The basic oscillator circuit is shown in Figure 4-4.

FIGURE 4-4: BASIC RELAXATION OSCILLATOR CIRCUIT

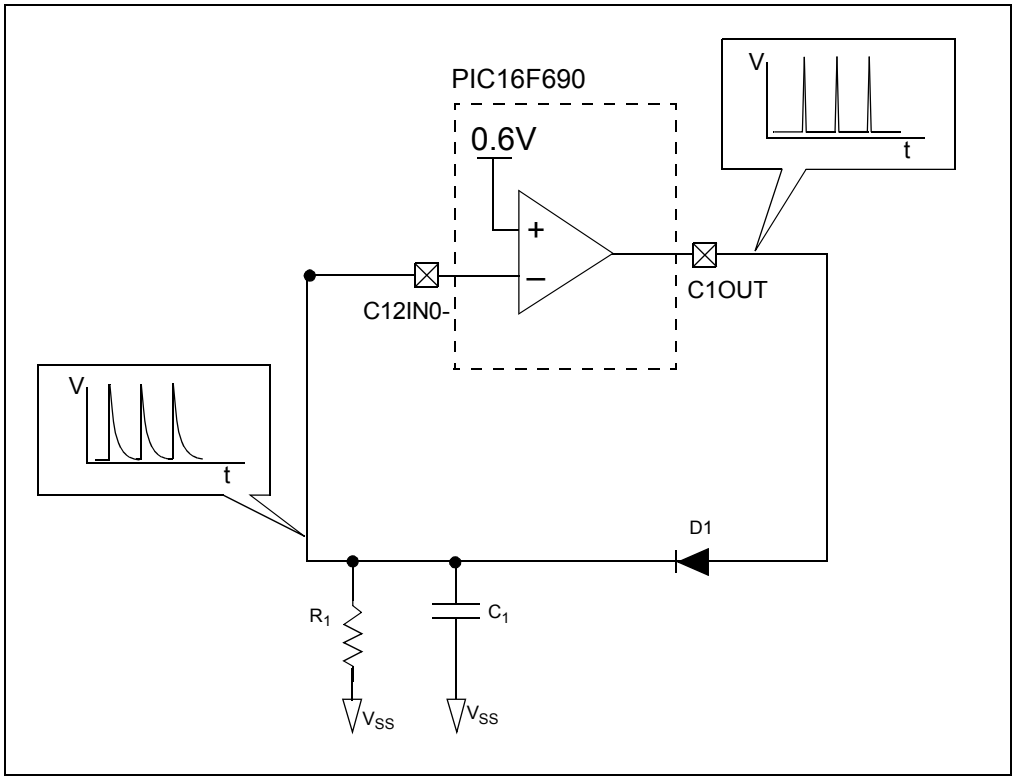

Referring to Figure 4-4, at start-up, the capacitor connected to the inverting reference of Comparator 1 is completely discharged. Therefore, the voltage present on the inverting reference is 0V which is less than the 0.6V fixed voltage reference on the non-inverting reference and Comparator 1's output goes high. This rapidly charges the capacitor through the diode (D1) to a level approximately equal to V_{DD}. Once the Comparator detects that the inverting reference input is greater than the 0.6V fixed voltage reference, the output transitions low. The charge across the capacitor then discharges slowly across the resistor R1. Once the capacitor charge drops below the 0.6V fixed

© 2009 Microchip Technology Inc.

reference, the cycle repeats and the system oscillates. The frequency of this oscillation is dependant on the RC time constant (τ = R x C), or the time it takes to discharge the capacitor to 37% of its initial voltage. As either the resistance or capacitance decreases, so will τ effectively increasing the frequency of the oscillator. If the resistor is replaced with a Negative Temperature Coefficient (NTC) thermistor where resistance decreases as temperature increases, any temperature change would cause a shift in resistance with a subsequent shift in the frequency of the oscillator.

This oscillator can be created quite easily by simply initializing the comparator and nothing more. However, with the addition of some intelligence and some additional peripherals, a high resolution sensor measurement application can be achieved.

The PIC16F690 features a 16-bit timer/counter peripheral Timer1. This timer can either use the internal instruction clock (FOSC/4) as its time base or an external clock source on the Timer1 Clock Input (T1CKI) pin to increment two 8-bit registers, TMR1H and TMR1L, to obtain a combined 16-bit result. In this application, the oscillator described will be used as the Timer1 clock source. Therefore, the TMR1H:TMR1L will increment with each low-to-high transition effectively counting the number of pulses. The Timer0 peripheral features an interrupt-on-overflow (255-0) that will be used to provide a fixed time frame in which the TMR1H:TMR1L registers will count. On a Timer0 overflow interrupt, the Timer1 peripheral stops counting and the current value in the upper 4-bits of TMR1H will be output to four LEDs connected to PORTC pins RC3, RC2, RC1 and RC0. In order to obtain a usable result, it is important that Timer0 triggers an interrupt before the TMR1H:TMR1L result overflows. If the temperature to the thermistor changes, the oscillator frequency will shift resulting in a change in the number of counts the Timer1 peripheral was able to implement before the fixed Timer0 interrupt with a different result displayed on the LEDs.

The schematic for this lab is shown in Figure 4-5.

FIGURE 4-5: SCHEMATIC FOR COMPARATOR LAB 3

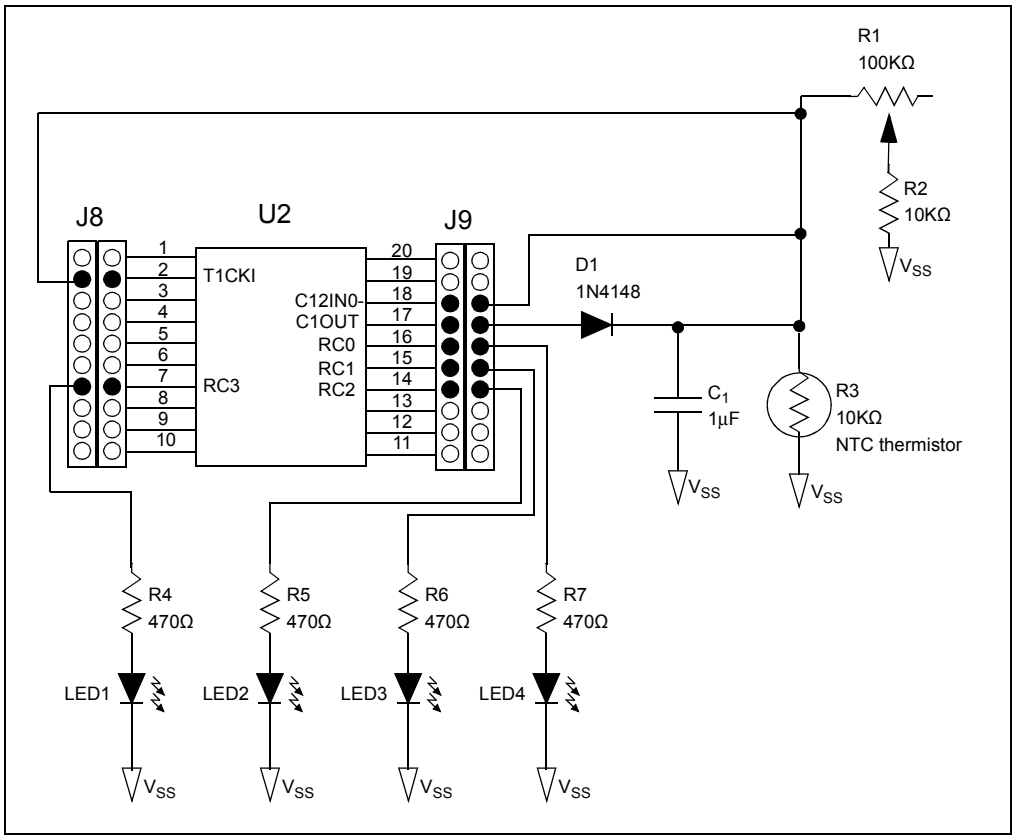

The software flowchart for this lab is shown in Figure 4-6.

FIGURE 4-6: `MAIN()` SOFTWARE CONTROL LOOP FLOWCHART FOR COMPARATOR LAB 3

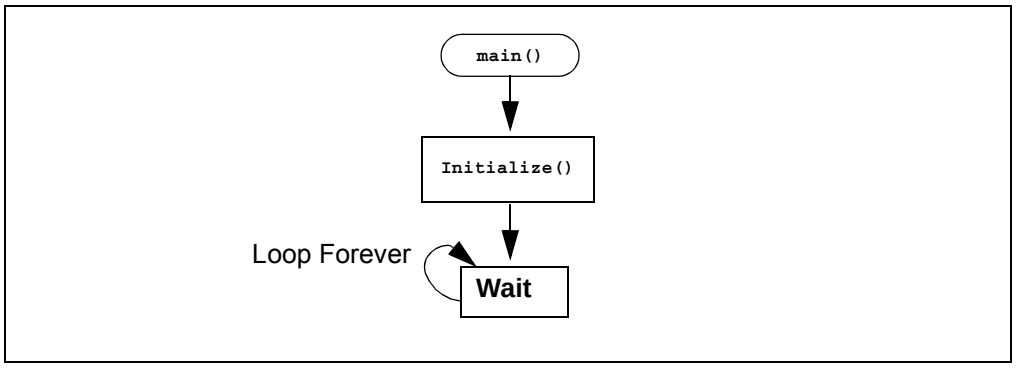

The **`Initialize()`** configures the PIC16F690 as follows:

- Configure PORTC pins RC0, RC1, RC2 and RC3 and digital outputs
- Comparator 1
  - Enable Comparator 1.
  - Make the Comparator 1 output available on the C1OUT pin configuring TRISA2 as an output.
  - Route the CVREF output to the non-inverting reference input.
  - Select pin C12IN0- as the inverting reference configuring TRISA1 as an input.
  - Configure the C1OUT pin as an output.
- CVREF Configuration:
  - Configure CVREF to route the 0.6V fixed voltage reference to the non-inverting reference of Comparator 1.
- Timer1 Configuration:
  - Select the T1CKI pin as the Timer1 clock source making TRISA5 an input.
  - Clear both Timer1 result registers TMR1H:TMR1L.
  - Turn on Timer1.
- Timer0
  - Select FOSC/4 as the Timer0 clock source.
  - Assign the prescaler to Timer0 and configure so that the TMR0 register increments every 256th clock pulse.
  - Enable Timer0 interrupt-on-overflow
  - Clear the Timer0 interrupt flag
  - Preload TMR0 with 10 (this ensures that a Timer0 interrupt will occur before the Timer1 registers overflow).
  - Enable Global Interrupts on the PIC16F690.

The Interrupt Service Routine, **`TMR0_ISR()`**, is shown in Figure 4-7.

© 2009 Microchip Technology Inc.

FIGURE 4-7: `TMR0_ISR` FLOWCHART FOR COMPARATOR LAB 3

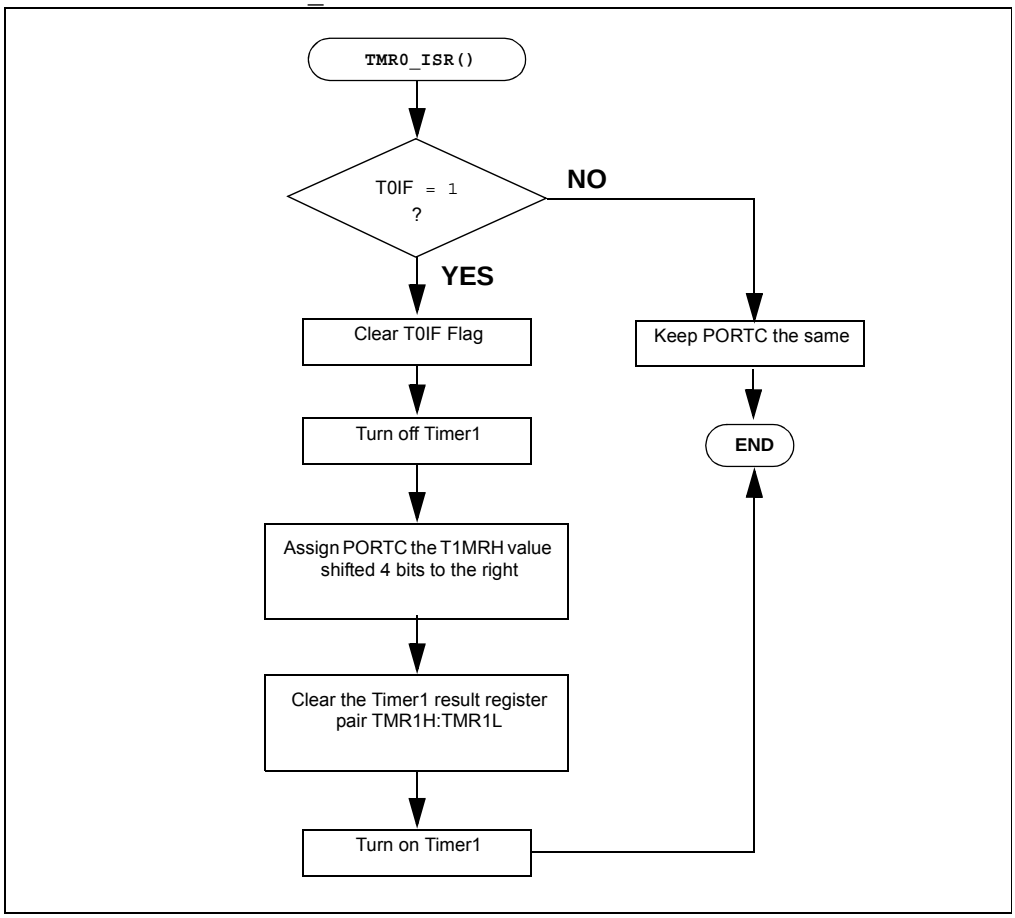

The **`TMR0_ISR()`** first checks if a Timer0 interrupt has occurred (good programming practice). If so, then the Timer0 interrupt flag is cleared and Timer1 is turned off to stop counting the oscillator clock pulses on the T1CKI pin. Next, the 4 MSbs of the Timer1 16-bit result is assigned to the RC0, RC1, RC2 and RC3 pins to light the associated LEDs. Finally, the Timer1 result register pair are cleared and Timer1 is turned on to begin a new count.

4.2.6.3 PROCEDURE

Using the firmware developed in the previous lab, make the following changes:

1. Copy/paste the code in Example 4-4 into the top of the main firmware source file under the heading labeled:
   `//----------INTERRUPT CODE----------`

EXAMPLE 4-4: TMR0_ISR CODE FOR LAB 3

```
void interrupt TMR0_ISR(void)
{
   //Check if Timer0 interrupt has occurred

   if(T0IE&&T0IF)
   {
      //if so, clear the interrupt flag
      T0IF = 0;
      //Turn off Timer1 (stop counting)
      TMR1ON = 0;
      //Assign the upper 4-bits of the 16-bit
      //result to PORTC to light the LEDs connected
      //RC0,R1,RC2 and RC3
      PORTC = TMR1H>>4;
      TMR0 = 10;
      //Clear the Timer1 register pair
      TMR1L = 0;
      TMR1H = 0;
      //Turn Timer1 back to start counting again
      TMR1ON = 1;
   }
   else PORTC = PORTC;
}
```

2. Copy/paste the code in Example 4-5 into the **`Initialize()`** over the code from the previous lab:

© 2009 Microchip Technology Inc.

EXAMPLE 4-5: INITIALIZE CODE FOR COMPARATOR LAB 3

```
//Configure RC0,RC1,RC2 and RC3 as digital outputs
   ANSEL = 0b00001111;
   PORTC = 0;
   TRISC0 = 0;
   TRISC1 = 0;
   TRISC2 = 0;
   TRISC3 = 0;
//Initialize PORTA pin connected to C12IN0-
   TRISA1 = 1;
//Make C1OUT pin an output
   TRISA2 = 0;
//Configure the Comparator 1 as follows:
//Turn on comparator 1
   C1ON = 1;
//Make C1OUT available externally
   C1OE = 1;
//Connect the non-inverting reference to CVREF
   C1R = 1;
//Connect the inverting reference to C12IN0-
   C1CH0 = 0;
   C1CH1 = 0;
//Configure the CVREF as follows:
//Route CVREF output to Comparator 1 non-inverting reference
   VRCON = 0;
//Enable the 0.6V fixed reference voltage
   VP6EN = 1;
//Configure Timer1 as follows
//Make T1CKI and input
   TRISA5 = 1;
   T1CON = 0;
//Select T1CKI as Timer1's clock source
   TMR1CS = 1;
//Initialize the 16-bit Timer1 register pair to 0
   TMR1H = 0;
   TMR1L = 0;
//Turn on Timer1
   TMR1ON = 1;
//Set up Timer0 as follows:
//Use FOSC/4 for Timer0 Clock Source
   OPTION = 0;
   T0CS = 0;
//assign the prescaler to TMR0
   PSA = 0;
//set up prescaler for 1:256
   PS0 = 1;
   PS1 = 1;
   PS2 = 1;
//Enable Timer0 Interrupts
   T0IE = 1;
//Clear the Timer0 overflow interrupt flag
   T0IF = 0;
//Preload TMR0 with 10 to keep overflow period
//less than Timer1 overflow period
   TMR0 = 10;
//Enable global interrupts
   GIE = 1;
```

3. Copy/paste the code in Example 4-6 into the **`main()`** over the code from the previous lab:

EXAMPLE 4-6: `MAIN()` CODE FOR COMPARATOR LAB 3

```
Initialize(); //Initialize the relevant registers
while(1);
```

4. Compile the project. There should be no errors.

4.2.6.4 TESTING THE APPLICATION

Program the PIC16F690. Adjust the R1 potentiometer until the LEDs begin to light displaying a binary value. Touching the thermistor should introduce heat, reduce the frequency of oscillation and increase the binary count on the LED display. Introducing cold to the thermistor should have the opposite effect thereby decreasing the binary count.

The solution for this project is located in the `C:\PICDEM_Lab\Comparator_Lab\Comparator_Lab3\solution` directory.

© 2009 Microchip Technology Inc.

Chapter 5. Analog-to-Digital Converter Peripheral Labs

5.1 INTRODUCTION

The Analog-to-Digital Converter (ADC) peripheral allows conversion of an analog input signal to a 10-bit binary value representing that signal so that it can be used in firmware.

The following labs cover some of the fundamental features of the Analog-to-Digital Converter (ADC) peripheral found on the PIC16F690 including some unique applications.

5.2 ADC LABS

The labs that will be implemented in this chapter are:

- Lab 1: Simple ADC
- Lab 2: Audible Temperature Sensor

5.2.1 Reference Documentation

All documentation is available on the PICDEM™ Lab Development Kit accompanying CD-ROM

- PIC16F690 Data Sheet (DS41262)
  - Section 4: I/O Ports
  - Section 5: Timer0 Module
  - Section 9: Analog-to-Digital Converter (ADC) Module
- Timers: Timer0 Tutorial (Part 1) (DS51628)
- Timers: Timer0 Tutorial (Part 2) (DS51702)
- *"Introduction to MPLAB® IDE and HI-TECH C® PRO for the PIC10/12/16 MCU Family Lite Mode Compiler Tutorial"* (DS41322)

5.2.2 Equipment Required

To complete the labs in this section, the following components are required:

1. 1 – 100Ω resistor
2. 4 – 470Ω resistors
3. 1 – 1KΩ resistor
4. 1 – 10 KΩ resistor
5. 1 – 100 KΩ potentiometer
6. 1 – 10 KΩ NTC Thermistor
7. 4 – Light Emitting Diodes
8. 1 – IRFD010 N-Channel MOSFET
9. PIC16F690 populating socket U2
10. Assorted jumper wires

5.2.3 Lab 1: Simple ADC

5.2.3.1 NEW REGISTERS USED IN THIS LAB

To configure the peripherals used in this lab, the following registers are used:

1. ADC Control Register 0: ADCON0 (Register 9-1 in Section 9 of the PIC16F690 Data Sheet)
   - Configures ADC conversion result justification.
   - Select ADC reference voltage.
   - Selects ADC input channel (i.e., pin with analog voltage to be converted).
   - Starts ADC conversion and determines when ADC conversion is complete.
   - Enables the ADC peripheral.
2. ADC Control Register 1: ADCON1 (Register 9-2 in Section 9 of the PIC16F690 Data Sheet)
   - Determines ADC conversion clock.
3. ADC Result Register high: ADRESH (see Register 9-3 in Section 9 of the PIC16F690 Data Sheet)
   - Holds upper 8-bits or upper 2-bits (depending on justification selected) of 10-bit ADC conversion result.
4. ADC Result Register low: ADRESL (see Register 9-4 in Section 9 of the PIC16F690 Data Sheet)
   - Holds lower 8-bits or lower 2-bit (depending on justification selected) of 10-bit ADC conversion result.

5.2.3.2 OVERVIEW

In this lab, the ADC peripheral on the PIC16F690 is used to perform a simple conversion of an analog voltage present on pin 13. The voltage is varied using a 100KΩ potentiometer. This voltage is compared against a reference voltage to generate a 10-bit binary result via successive approximation stored into two 8-bit ADC result registers ADRESH and ADRESL. The ADC result is software selectable as either left or right justified as shown in Section 9.1.6 of the PIC16F690 Data Sheet. This application will configure the ADC result as left justified with the four Most Significant bits of the 10-bit result output to the RC0, RC1,RC2 and RC3 PORTC pins used to light connected LEDs accordingly.The PICDEM™ Development Board configuration schematic is shown in Figure 5-1.

© 2009 Microchip Technology Inc.

FIGURE 5-1: SCHEMATIC FOR ADC LAB 1

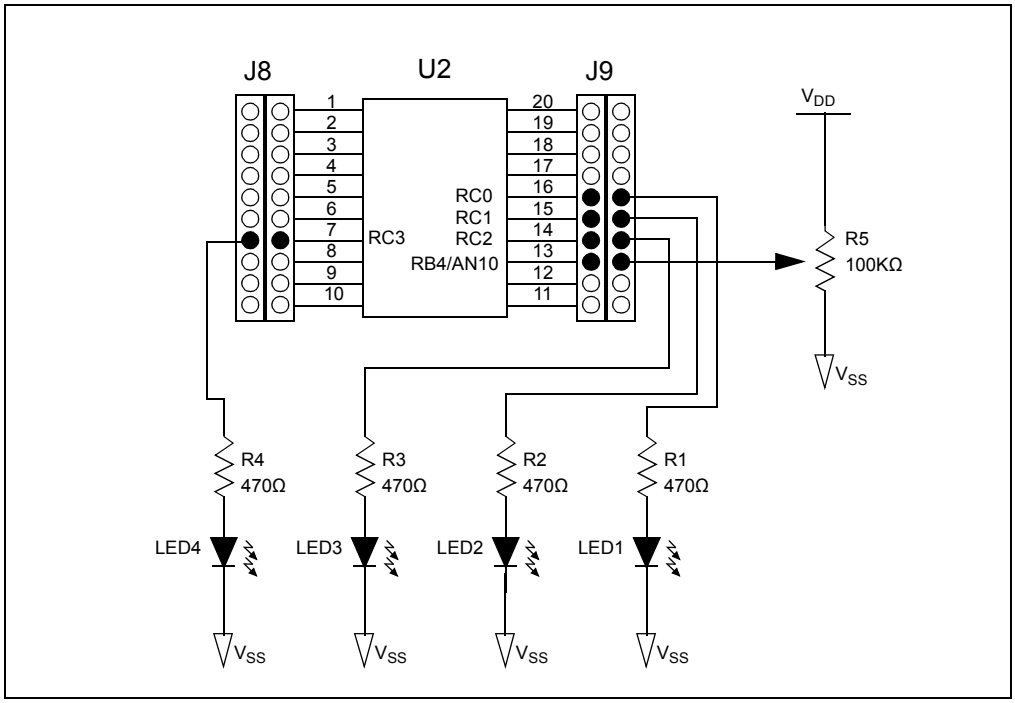

The voltage reference is software selectable as either VDD or an external voltage applied to the external reference pin 18 (VREF). To minimize circuit complexity, this application makes use of VDD as the reference.

The software flowchart for this lab is shown in Figure 5-2.

FIGURE 5-2: `MAIN()` SOFTWARE CONTROL LOOP FLOWCHART FOR COMPARATOR LAB 1

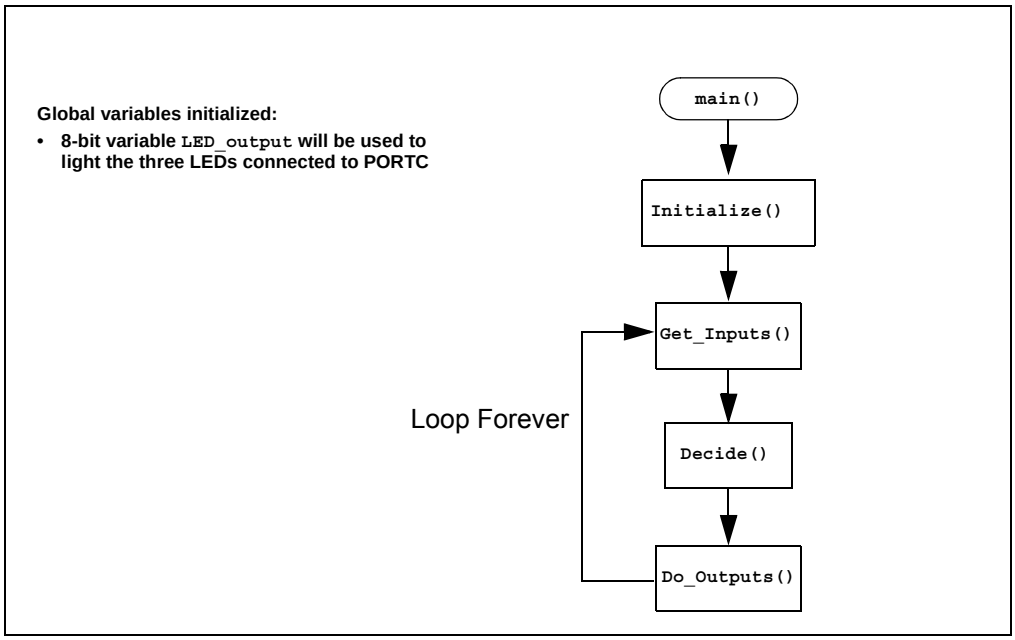

The **`Initialize()`** configures the peripherals as follows:

- Ports
  - Configure pin 13 as an analog input (using TRISB4).
  - Clear the PORTC register.
  - Configure RC0, RC1, RC2 and RC3 pins as digital output.
- ADC
  - Select ADC conversion clock FRC.
  - Configure voltage reference using VDD.
  - Select channel 10 as the ADC input channel (Pin 13: RB4/AN10).
  - Select result format left justified (10-bit result in ADRESH<7:0> and ADRESL<7:6>).
  - Turn on ADC module.

> **Note:** The ADC conversion clock is the time that will be used to convert the analog voltage present on pin 13 to a 10-bit value in the ADRESH:ADRESL registers. It takes 11 of these conversion clock cycles to perform a complete ADC. If the conversion clock period is insufficient, an incomplete ADC result will occur. The electrical specifications for the PIC16F690 state that the conversion clock must have a period of at least 1.5 µSeconds or a frequency of approximately 667 kHz. The ADC Module section of the data sheet specifies acceptable conversion clock frequencies depending on the main oscillator used to drive the microcontroller and should be referenced. In this application, a dedicated internal oscillator for the ADC module is used ensuring a conversion clock frequency of between 2-6 µSeconds. (see Table 17-16 in Section 17 of the PIC16F690 Data Sheet).

Next, the **`Get_Inputs()`** performs an ADC on the voltage present on pin 13. The internal capacitor connected to the input of the ADC peripheral needs time to charge to the voltage present on the pin. Therefore, software will need to implement a short delay to allow for this charging time. The ADC Module section "A/D Acquisition Requirements" of the data sheet goes into great detail and includes an equation for selecting an appropriate acquisition time. For the purposes of this lab, a simple 1mS delay should be more than sufficient. These parameters become important in high-speed applications where every µS counts.

The GO/$\overline{\text{DONE}}$ bit in ADCON0 is used to start the ADC process when set to '`1`'. This bit also serves as a flag that indicates when the ADC is completed (GO/$\overline{\text{DONE}}$ = `0`). Therefore, the **`Get_Inputs()`** initiates an ADC by setting GO/$\overline{\text{DONE}}$ then sits and waits for the bit to clear indicating a completed conversion.

The software flowchart for the **`Get_Inputs()`** is shown in Figure 5-3.

© 2009 Microchip Technology Inc.

FIGURE 5-3: MAIN() SOFTWARE CONTROL LOOP FLOWCHART FOR COMPARATOR LAB 1

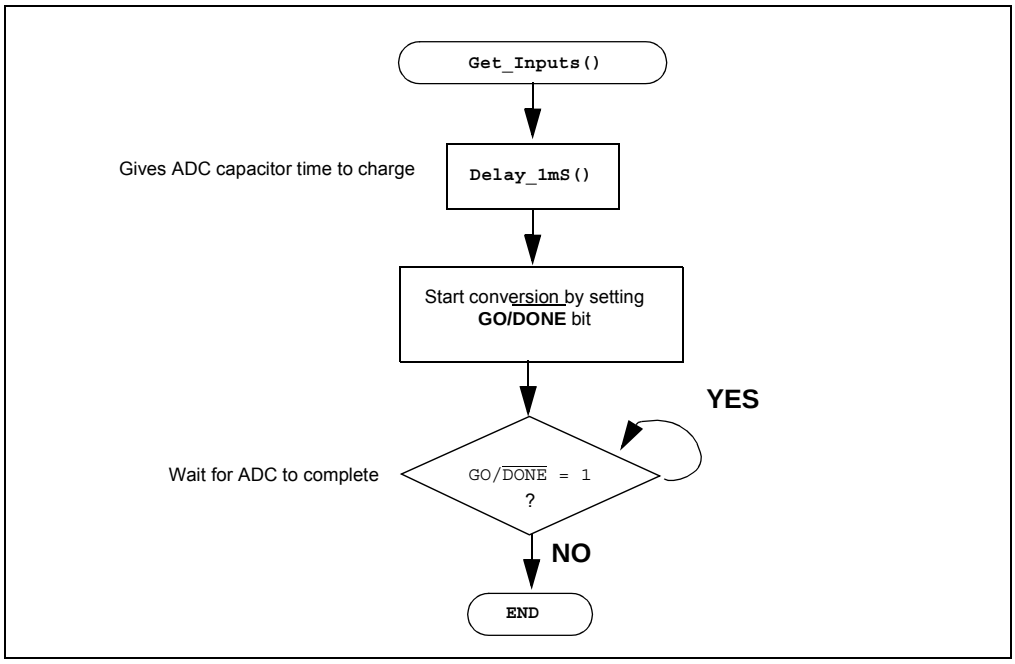

Following the **Get_Inputs()**, the 10-bit ADC result is now in the ADRESH:ADRESL registers. The **Decide()** assigns the ADC result value, shifted four bit positions to the right, to the **LED_Output** variable.

Finally, the **Do_Outputs()** assigns the contents of **LED_Output** to the PORTC register that will light the LEDs connected to RC0, RC1, RC2 and RC3 accordingly.

5.2.3.3 PROCEDURE

Using the Project Wizard, create a new project called `ADC_Lab1.mcp`. Once completed, open the `ADC_Lab1.c` source file in MPLAB and make the following changes:

1. Copy/paste the code in Example 5-1 into the top of the main firmware source file under the heading labeled:
   //----------DATA MEMORY----------

EXAMPLE 5-1: GLOBAL VARIABLES USED IN LAB 1

```
unsigned char LED_Output = 0;//assigned to PORTC to light
                             //connected LEDs
```

2. Copy/paste the code in Example 5-2 into the top of the main firmware source file under the heading labeled:
   //----------SUPPORT ROUTINES----------

EXAMPLE 5-2: `DELAY_1MS()` CODE FOR ADC LAB 1

```
/*-------------------------------------------------------
   Subroutine: Delay_1mS
   Parameters: none
   Returns:nothing
   Synopsys:Creates a 1mS delay when called
-------------------------------------------------------*/
void Delay_1mS(void)
{
   unsigned int delay_var = 98;
   //Keep looping until the delay_var is
   // equal to zero (should take 1mS)
   while(--delay_var);
}
```

3. Copy/paste the code in Example 5-3 into the **`Initialize()`** section labeled: **`//ADD INITIALIZE CODE HERE`**

© 2009 Microchip Technology Inc.

EXAMPLE 5-3: INITIALIZE CODE FOR COMPARATOR LAB 1

```
//Configure Port:
   //Disable pin output driver (See TRIS register)
   TRISB4 = 1;

   // Configure pin as analog
   ANS10 = 1;

   //Configure RC0, RC1, RC2 and RC3 as digital output
   PORTC = 0;
   TRISC0 = 0;
   TRISC1 = 0;
   TRISC2 = 0;
   TRISC3 = 0;

   ANS4 = 0;
   ANS5 = 0;
   ANS6 = 0;
   ANS7 = 0;

//Configure the ADC module:
   //Select ADC conversion clock Frc
   ADCS0 = 1;
   ADCS1 = 1;
   ADCS2 = 1;

   //Configure voltage reference using VDD
   VCFG = 0;

   //Select ADC input channel Pin 13 (RB4/AN10)
   CHS0 = 0;
   CHS1 = 1;
   CHS2 = 0;
   CHS3 = 1;


   //Select result format left justified
   ADFM = 0;

   //Turn on ADC module
   ADON = 1;
```

4. Copy/paste the code in Example 5-4 into the **`Get_Inputs()`** section labeled: **`//ADD GET INPUTS CODE HERE`**

EXAMPLE 5-4: `GET_INPUTS()` CODE FOR ADC LAB 1

```
//Perform an ADC of potentiometer connected to pin 13

//Wait the required acquisition time
Delay_1mS();

//Start conversion by setting the GO/DONE bit.
GODONE = 1;

//Wait for ADC conversion to complete
//Polling the GO/DONE bit
//  0 = ADC completed
//  1 = ADC in progress
while(GODONE == 1);
```

5. Copy/paste the code in Example 5-5 into the **`Decide()`** section labeled: **`//ADD DECIDE CODE HERE`**

EXAMPLE 5-5: `DECIDE()` CODE FOR ADC LAB 1

```
//Assign the upper 4 bits of ADRESH to the lower 4 bits
//of LED_Output
LED_Output = ADRESH >> 4; //Shifts the bits in ADRESL 4 bits
                          //to the right
```

6. Copy/paste the code in Example 5-6 into the **`Do_Outputs()`** section labeled: **`//ADD DO OUTPUTS CODE HERE`**

EXAMPLE 5-6: `D0_OUTPUTS()` CODE FOR ADC LAB 1

```
//Assign contents of LED_Output to PORTC to light the connected
//LEDs
PORTC = LED_Output;
```

7. Copy/paste the code in Example 5-7 into the **`main()`** section labeled: **`//ADD MAIN CODE HERE`**

EXAMPLE 5-7: `MAIN()` CODE FOR ADC LAB 1

```
Initialize(); //Initialize the relevant registers
while(1)
{
   Get_Inputs();
   Decide();
   Do_Outputs();
}
```

8. Compile the project. There should be no errors.

© 2009 Microchip Technology Inc.

5.2.3.4 TESTING THE APPLICATION

Program the PIC16F690. Turning the potentiometer connected to pin 13 should light the LEDs sequentially in a binary fashion. Note that these are the 4 Most Significant bits of the ADC result. Adding 6 more LEDs and I/O pins would allow the complete 10-bit value to be displayed. To determine the significance of each bit in the ADRESH:ADRESL 10-bit result, see Figure 5-4.

FIGURE 5-4: ADC RESULT BIT SIGNIFICANCE

10-BIT ADC RESULT (ADRESH: ADRESL)

$\frac{1}{2}V_{DD}$	$\frac{1}{4}V_{DD}$	$\frac{1}{8}V_{DD}$	$\frac{1}{16}V_{DD}$	$\frac{1}{32}V_{DD}$	$\frac{1}{64}V_{DD}$	$\frac{1}{128}V_{DD}$	$\frac{1}{256}V_{DD}$	$\frac{1}{512}V_{DD}$	$\frac{1}{1024}V_{DD}$

Note: Assumes that V_{DD} is used as the ADC reference. If an external reference is used, the voltage present on V_{REF} pin is substituted for V_{DD}.

Example:

If following an ADC, the ADRESH:ADRESL contains the following 10-bit value:

10-BIT ADC RESULT (ADRESH: ADRESL)

1	1	0	0	1	0	0	0	0	1

$$\frac{1}{2}V_{DD} + \frac{1}{4}V_{DD} + \frac{1}{32}V_{DD} + \frac{1}{1024}V_{DD}$$

Bit positions set to '1' are added together

$$= \frac{1}{2}5V + \frac{1}{4}5V + \frac{1}{32}5V + \frac{1}{1024}5V$$

$$= 2.5V + 1.25V + 0.15625V + 0.000488V = 3.911V$$

(rounded to the nearest mV)

Note: Using a 5V reference voltage with a 10-bit provides a resolution of 0.000488V or 4.88mV (5V/1024).

Since this lab outputs the 4 Most Significant bits of the ADC result and VDD is used as the reference voltage, the LED display should correspond with the following voltage levels shown in Table 5-1.

TABLE 5-1: CORRESPONDING VOLTAGE ON PIN 13 RELATED TO LIT LEDS (1 = LED ON, 0 = LED OFF)

LED4	LED3	LED2	LED1	pin 13 Voltage
0	0	0	0	< 0.3125V
0	0	0	1	> 0.3125V
0	0	1	0	> 0.625V
0	0	1	1	> 0.9375V
0	1	0	0	> 1.25V
0	1	0	1	> 1.5625V
0	1	1	0	> 1.875V
0	1	1	1	> 2.1875V
1	0	0	0	> 2.5V
1	0	0	1	> 2.8125V
1	0	1	0	> 3.125V
1	0	1	1	> 3.4375V
1	1	0	0	> 3.75V
1	1	0	1	> 4.0625V
1	1	1	0	> 4.375V
1	1	1	1	> 4.6875V or greater

Note: The greater than symbol (>) is required since the lower 6 bits of the ADC result are not shown using LEDs.

The solution for this project is located in the `C:\PICDEM_Lab\ADC_Labs\ADC_Lab1\solution` directory.

© 2009 Microchip Technology Inc.

5.2.4 Lab 2: Audible Temperature Sensor

5.2.4.1 OVERVIEW

In this lab, the ADC peripheral on the PIC16F690 is used to alter the frequency of Pulse-Width Modulated Waveform (PWM) in relation to the temperature sensed by a thermistor connected to the input of the ADC peripheral. The PWM waveform is generated by simply toggling the RC0 voltage level high and low. The thermistor is used to create a voltage divider in conjunction with a 1KΩ resistor to vary the voltage into the ADC input. This thermistor is a Negative Temperature Coefficient type (NTC) meaning that as the temperature of the device increases, the resistance effectively decreases. The voltage drop across the thermistor is converted by the ADC and the ADRESH result then used to manipulate a TMR0 preload value (see GPIO Lab 3) that will be used in the `Timing()` to vary the execution speed of the software control loop and ultimately the frequency of the PWM waveform. The PWM will be connected to an N-Channel MOSFET used to drive the 8Ω speaker on the PICDEM Lab Development Board. The schematic for this lab is shown in Figure 5-5.

FIGURE 5-5: SCHEMATIC FOR ADC LAB 2

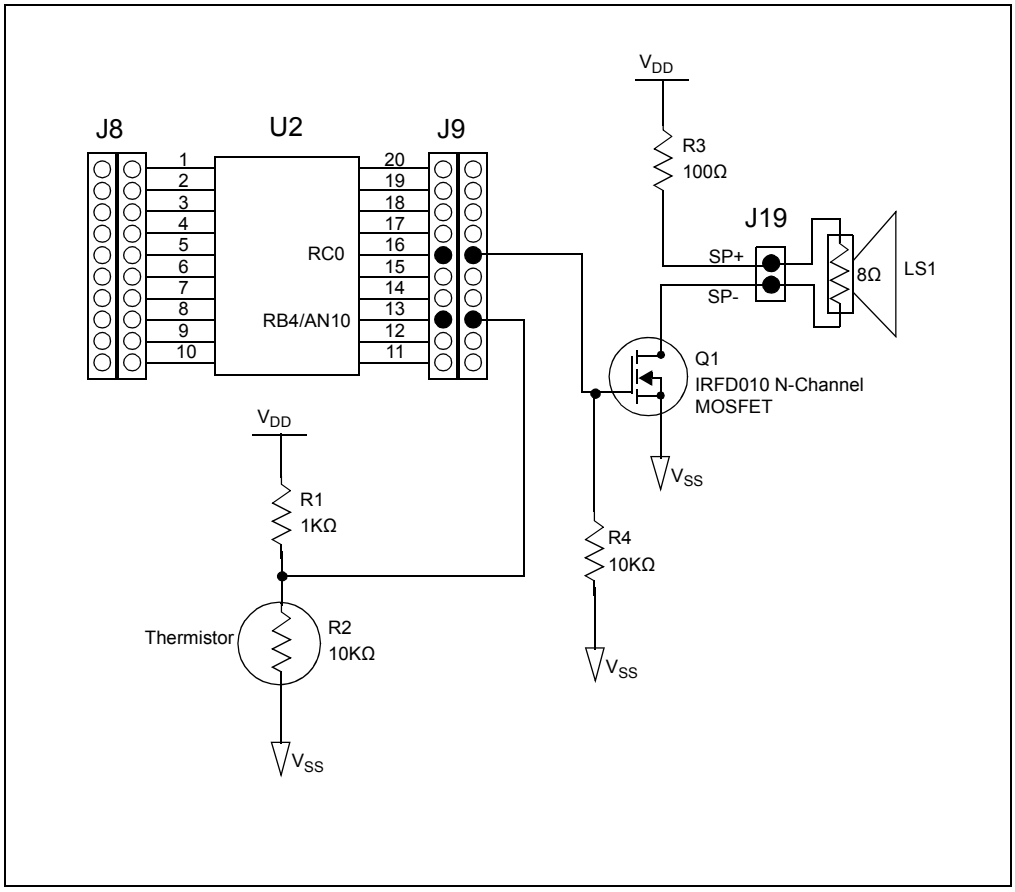

Referring to the schematic in Figure 5-5, the RC0 connects to the gate of the IRFD010 N-Channel MOSFET Q1. Resistor R4 pulls the gate input low ensuring the transistor will remain OFF until a high voltage level is present on the RC0 output. When the PWM transitions high, Q1 is ON and current flows through the 8Ω speaker. The 100Ω R3 resistor is used to limit the current through the speaker to maintain manufacturer specified power ratings. In this way, any change in temperature around the thermistor will alter the frequency of the PWM, thereby changing the audible frequency emitted from the speaker.

The audible frequency range is between 20-20000Hz. Therefore, the **`Timing()`** delays from a maximum of 4.096 mS (244.1Hz) to a minimum of 1.536 mS (651Hz). These values are determined using the internal instruction clock (FOSC/4) as the TMR0 clock source with a prescaler of 1:16. Other values could easily be used as long as the frequency of the PWM remains within the audible range.

The software flowchart for this lab is shown in Figure 5-6.

FIGURE 5-6: `MAIN()` SOFTWARE CONTROL LOOP FLOWCHART FOR ADC LAB 2

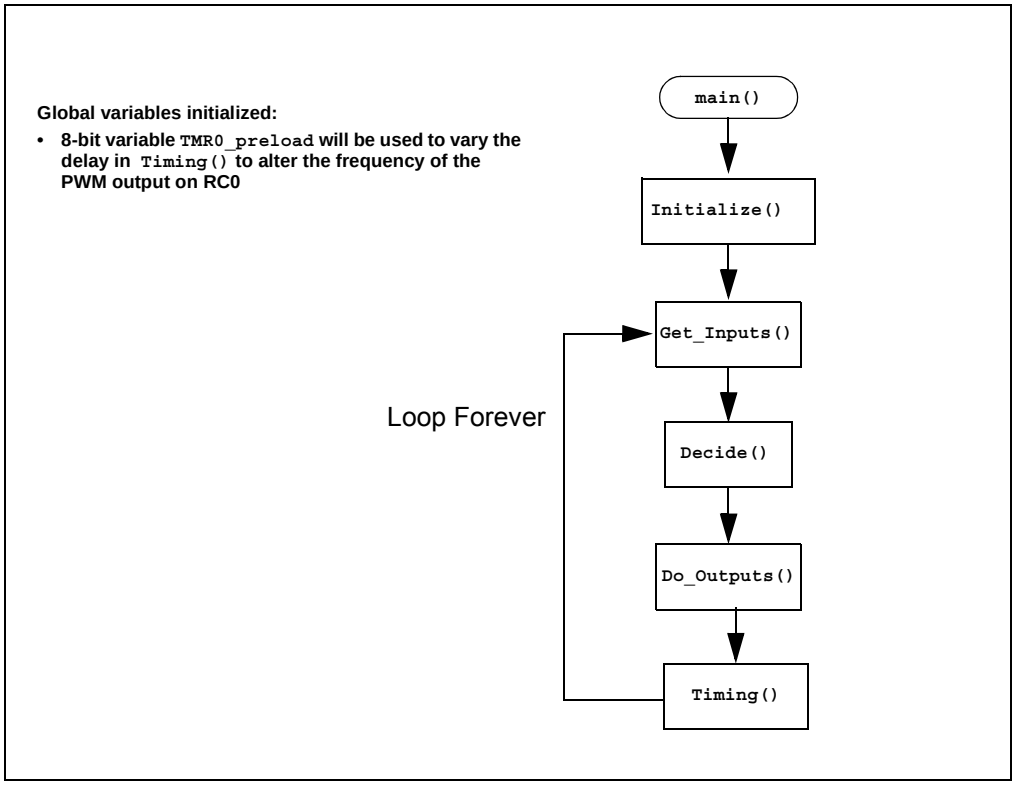

The **`Initialize()`** configures the peripherals as follows:

- Ports
  - Clear PORTB.
  - Configure pin 13 as an analog input (using TRISB4).
  - Clear the PORTC register.
  - Configure RC0 pin as digital output.
- Timer0
  - Select the FOSC/4 internal instruction clock as the Timer0 clock source.
  - Increment TMR0 on the low-to-high transition of FOSC/4.
  - Assign the prescaler to Timer0 and configure at a rate of 1:16.
- ADC
  - Select ADC conversion clock FRC.
  - Configure voltage reference using VDD.
  - Select channel 10 as the ADC input channel (Pin 13: RB4/AN10).
  - Select result format left justified (10-bit result in ADRESH<7:0> and ADRESL<7:6>).
  - Turn on ADC module.

© 2009 Microchip Technology Inc.

Next, the **Get_Inputs()** performs an ADC on the voltage present on pin 13 using the same code as Lab 1 with one minor change. This application is very dependant on the timing of the software control loop. The 1mS delay used in Lab 1 to allow the hold capacitor on the input of ADC to fully charge to the pin voltage is excessive. Using the example given in Equation 9-1, Section 9 in the PIC16F690 Data Sheet as a reference, the acquisition delay time is shortened to 8µS which should be sufficient.

The **Decide()** assigns the ADC result value, shifted three bit positions to the left, to the **TMR0_preload** variable.

The **Do_Outputs()** assigns the current **toggle** bit value to RC0 that will transition the output accordingly.

Finally, the **Timing()** clears the TMR0 overflow flag (T0IF), preloads the TMR0 register with the **TMR0_preload** value subtracted from 255. The function then waits until the T0IF is set high before returning to the **main()**. In this way, as the temperature at the thermistor increases, as will the frequency of the PWM.

5.2.4.2 PROCEDURE

Using the firmware developed in the previous lab, make the following changes:

1. Copy/paste the code in Example 5-8 into the top of the main firmware source file under the heading labeled:
   //----------DATA MEMORY----------

> **Note:** Be sure to paste over the code from the previous lab.

EXAMPLE 5-8: GLOBAL VARIABLES USE IN ADC LAB 2

```
unsigned char LED_Output = 0; //assigned to PORTC to light
                              //connected LEDs

bit toggle = 0;//Used to generate waveform on RC0

unsigned char TMR0_preload = 0; //Varied by ADRESH to change
                               //frequency of
                 //waveform on RC0
```

2. Copy/paste the code in Example 5-9 over the **Initialize()** code from the previous lab:

EXAMPLE 5-9: INITIALIZE CODE FOR ADC LAB 2

```
//Configure Port:
    PORTB = 0;
    //Disable pin output driver (See TRIS register)
    TRISB4 = 1;

    // Configure RB4 as analog pin as analog
    ANS10 = 1;

    //Configure RC0, RC1, RC2 and RC3 as digital output
    PORTC = 0;
    TRISC0 = 0;
    ANS4 = 0;

    //Configure Timer0 as follows:

    //Select the FOSC/4 internal instruction clock
    //as the clock source for TMR0
    T0CS = 0;
    //Increment TMR0 value on low-to-high transition
    //of the FOSC/4
    T0SE = 0;
    //Assign the prescaler to TMR0
    PSA = 1;
    //Configure the prescaler to increment TMR0
    //at a rate of 1:16
    PS0 = 1;
    PS1 = 1;
    PS2 = 0;

    //Configure the ADC module:
    //Select ADC conversion clock Frc
    ADCS0 = 1;
    ADCS1 = 1;
    ADCS2 = 1;

    //Configure voltage reference using VDD
    VCFG = 0;

    //Select ADC input channel Pin 13 (RB4/AN10)
    CHS0 = 0;
    CHS1 = 1;
    CHS2 = 0;
    CHS3 = 1;


    //Select result format left justified
    ADFM = 0;

    //Turn on ADC module
    ADON = 1;
```

3. Copy/paste the code in Example 5-10 over the **`Get_Inputs()`** code from the previous lab:

© 2009 Microchip Technology Inc.

EXAMPLE 5-10: `GET_INPUTS()` CODE FOR ADC LAB 2

```
       unsigned char counter = 2;

//Give ADC hold capacitor time to charge
//This works out to approximately 8uS
   while(--counter > 0);

   //Start conversion by setting the GO/DONE bit.
   GODONE = 1;

   //Wait for ADC conversion to complete
   //Polling the GO/DONE bit
   //  0 = ADC completed
   //  1 = ADC in progress
   while(GODONE == 1);
```

4. Copy/paste the code in Example 5-11 over the `Decide()` code from the previous lab:

EXAMPLE 5-11: `DECIDE()` CODE FOR ADC LAB 2

```
   //Shift the ADRESH result to the left
   //by three bit positions and assign to
   //TMR0_preload
   TMR0_preload = ADRESH<<3;

   //XOR the toggle value with 1
   toggle ^= 1;
```

5. Copy/paste the code in Example 5-12 over the `Do_Outputs()` code from the previous lab:

EXAMPLE 5-12: `D0_OUTPUTS()` CODE FOR ADC LAB 2

```
   //Assign the toggle value to RC0 pin
   RC0 = toggle;
```

6. Copy/paste the code in Example 5-13 into the **Timing()** section labeled:

//ADD TIMING CODE HERE

EXAMPLE 5-13: TIMING() CODE FOR ADC LAB 2

```
   //Clear the T0IF
   T0IF = 0;
   //Subtract the TMR0_preload value from 255 and
   //then use to preload TMR0
   TMR0 = 255 - TMR0_preload;
   //Sit here and wait for TMR0 to overflow while (T0IF == 0);
```

7. Copy/paste the code in Example 5-14 over the **`main()`** code from the previous lab:

EXAMPLE 5-14: `MAIN()` CODE FOR ADC LAB 2

```
Initialize(); //Initialize the relevant registers
while(1)
{
   Get_Inputs();
   Decide();
   Do_Outputs();
   Timing();
}
```

8. Compile the project. There should be no errors.

5.2.4.3 TESTING THE APPLICATION

Program the PIC16F690. An audible tone should emit from the speaker. Pinching the thermistor should introduce body heat to the component thereby increasing the frequency of the speaker output. Colder temperature sources applied to the thermistor should reduce the speaker output frequency.

The solution for this project is located in the `C:\PICDEM_Lab\ADC_Labs\ADC_Lab2\solution` directory.

© 2009 Microchip Technology Inc.

Appendix A. Schematic

A.1 PICDEM LAB DEVELOPMENT KIT SCHEMATIC

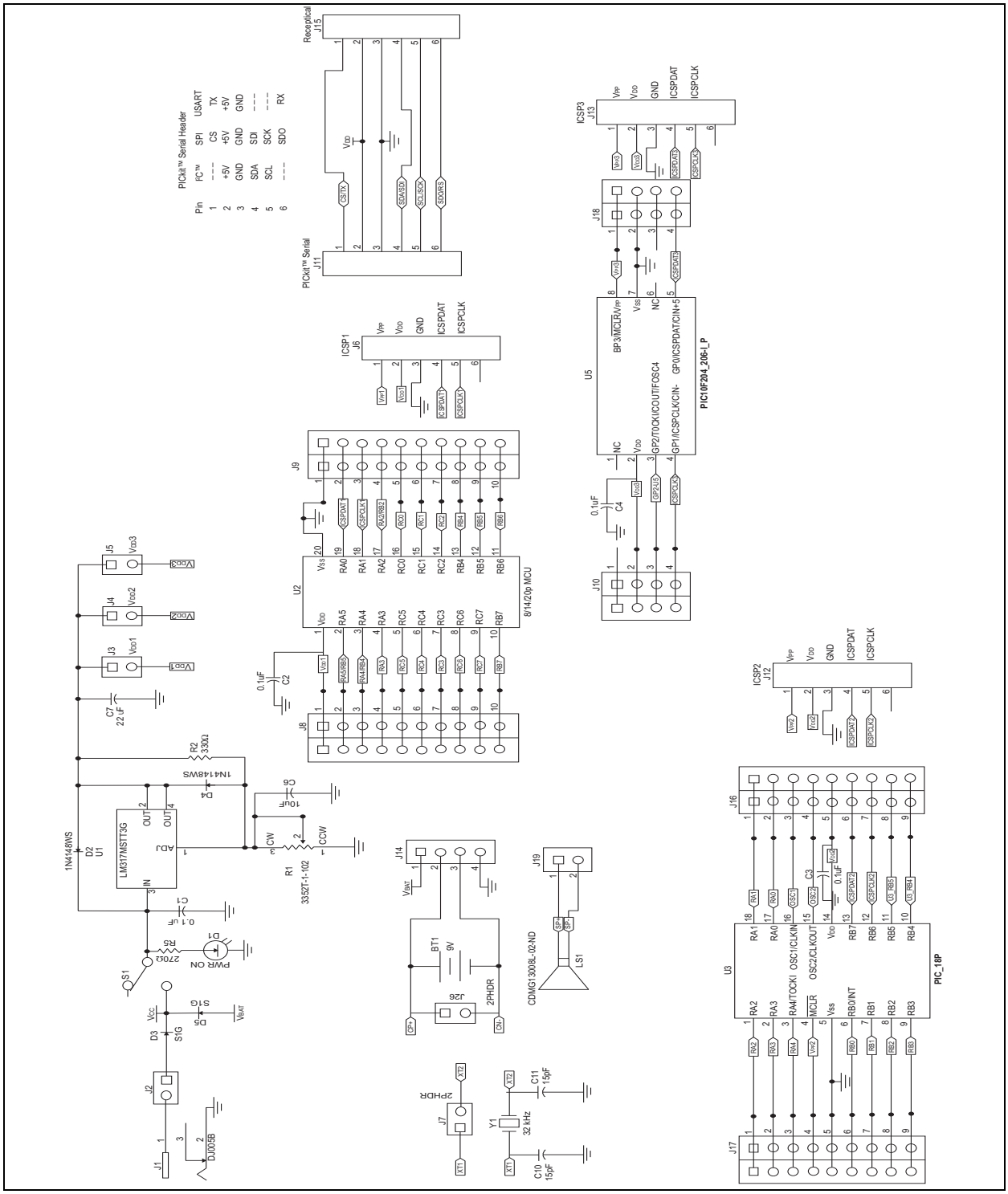

WORLDWIDE SALES AND SERVICE

AMERICAS

Corporate Office
2355 West Chandler Blvd.
Chandler, AZ 85224-6199
Tel: 480-792-7200
Fax: 480-792-7277
Technical Support:
http://support.microchip.com
Web Address:
www.microchip.com

Atlanta
Duluth, GA
Tel: 678-957-9614
Fax: 678-957-1455

Boston
Westborough, MA
Tel: 774-760-0087
Fax: 774-760-0088

Chicago
Itasca, IL
Tel: 630-285-0071
Fax: 630-285-0075

Cleveland
Independence, OH
Tel: 216-447-0464
Fax: 216-447-0643

Dallas
Addison, TX
Tel: 972-818-7423
Fax: 972-818-2924

Detroit
Farmington Hills, MI
Tel: 248-538-2250
Fax: 248-538-2260

Kokomo
Kokomo, IN
Tel: 765-864-8360
Fax: 765-864-8387

Los Angeles
Mission Viejo, CA
Tel: 949-462-9523
Fax: 949-462-9608

Santa Clara
Santa Clara, CA
Tel: 408-961-6444
Fax: 408-961-6445

Toronto
Mississauga, Ontario,
Canada
Tel: 905-673-0699
Fax: 905-673-6509

ASIA/PACIFIC

Asia Pacific Office
Suites 3707-14, 37th Floor
Tower 6, The Gateway
Harbour City, Kowloon
Hong Kong
Tel: 852-2401-1200
Fax: 852-2401-3431

Australia - Sydney
Tel: 61-2-9868-6733
Fax: 61-2-9868-6755

China - Beijing
Tel: 86-10-8528-2100
Fax: 86-10-8528-2104

China - Chengdu
Tel: 86-28-8665-5511
Fax: 86-28-8665-7889

China - Hong Kong SAR
Tel: 852-2401-1200
Fax: 852-2401-3431

China - Nanjing
Tel: 86-25-8473-2460
Fax: 86-25-8473-2470

China - Qingdao
Tel: 86-532-8502-7355
Fax: 86-532-8502-7205

China - Shanghai
Tel: 86-21-5407-5533
Fax: 86-21-5407-5066

China - Shenyang
Tel: 86-24-2334-2829
Fax: 86-24-2334-2393

China - Shenzhen
Tel: 86-755-8203-2660
Fax: 86-755-8203-1760

China - Wuhan
Tel: 86-27-5980-5300
Fax: 86-27-5980-5118

China - Xiamen
Tel: 86-592-2388138
Fax: 86-592-2388130

China - Xian
Tel: 86-29-8833-7252
Fax: 86-29-8833-7256

China - Zhuhai
Tel: 86-756-3210040
Fax: 86-756-3210049

ASIA/PACIFIC

India - Bangalore
Tel: 91-80-3090-4444
Fax: 91-80-3090-4080

India - New Delhi
Tel: 91-11-4160-8631
Fax: 91-11-4160-8632

India - Pune
Tel: 91-20-2566-1512
Fax: 91-20-2566-1513

Japan - Yokohama
Tel: 81-45-471- 6166
Fax: 81-45-471-6122

Korea - Daegu
Tel: 82-53-744-4301
Fax: 82-53-744-4302

Korea - Seoul
Tel: 82-2-554-7200
Fax: 82-2-558-5932 or
82-2-558-5934

Malaysia - Kuala Lumpur
Tel: 60-3-6201-9857
Fax: 60-3-6201-9859

Malaysia - Penang
Tel: 60-4-227-8870
Fax: 60-4-227-4068

Philippines - Manila
Tel: 63-2-634-9065
Fax: 63-2-634-9069

Singapore
Tel: 65-6334-8870
Fax: 65-6334-8850

Taiwan - Hsin Chu
Tel: 886-3-572-9526
Fax: 886-3-572-6459

Taiwan - Kaohsiung
Tel: 886-7-536-4818
Fax: 886-7-536-4803

Taiwan - Taipei
Tel: 886-2-2500-6610
Fax: 886-2-2508-0102

Thailand - Bangkok
Tel: 66-2-694-1351
Fax: 66-2-694-1350

EUROPE

Austria - Wels
Tel: 43-7242-2244-39
Fax: 43-7242-2244-393

Denmark - Copenhagen
Tel: 45-4450-2828
Fax: 45-4485-2829

France - Paris
Tel: 33-1-69-53-63-20
Fax: 33-1-69-30-90-79

Germany - Munich
Tel: 49-89-627-144-0
Fax: 49-89-627-144-44

Italy - Milan
Tel: 39-0331-742611
Fax: 39-0331-466781

Netherlands - Drunen
Tel: 31-416-690399
Fax: 31-416-690340

Spain - Madrid
Tel: 34-91-708-08-90
Fax: 34-91-708-08-91

UK - Wokingham
Tel: 44-118-921-5869
Fax: 44-118-921-5820

02/04/09

© 2009 Microchip Technology Inc.