

PIC18F46J50
Data Sheet

28/44-Pin, Low-Power, High-Performance USB Microcontrollers with nanoWatt XLP Technology

© 2011 Microchip Technology Inc.

Note the following details of the code protection feature on Microchip devices:

- Microchip products meet the specification contained in their particular Microchip Data Sheet.
- Microchip believes that its family of products is one of the most secure families of its kind on the market today, when used in the intended manner and under normal conditions.
- There are dishonest and possibly illegal methods used to breach the code protection feature. All of these methods, to our knowledge, require using the Microchip products in a manner outside the operating specifications contained in Microchip's Data Sheets. Most likely, the person doing so is engaged in theft of intellectual property.
- Microchip is willing to work with the customer who is concerned about the integrity of their code.
- Neither Microchip nor any other semiconductor manufacturer can guarantee the security of their code. Code protection does not mean that we are guaranteeing the product as "unbreakable."

Code protection is constantly evolving. We at Microchip are committed to continuously improving the code protection features of our products. Attempts to break Microchip's code protection feature may be a violation of the Digital Millennium Copyright Act. If such acts allow unauthorized access to your software or other copyrighted work, you may have a right to sue for relief under that Act.

Information contained in this publication regarding device applications and the like is provided only for your convenience and may be superseded by updates. It is your responsibility to ensure that your application meets with your specifications. MICROCHIP MAKES NO REPRESENTATIONS OR WARRANTIES OF ANY KIND WHETHER EXPRESS OR IMPLIED, WRITTEN OR ORAL, STATUTORY OR OTHERWISE, RELATED TO THE INFORMATION, INCLUDING BUT NOT LIMITED TO ITS CONDITION, QUALITY, PERFORMANCE, MERCHANTABILITY OR FITNESS FOR PURPOSE**.** Microchip disclaims all liability arising from this information and its use. Use of Microchip devices in life support and/or safety applications is entirely at the buyer's risk, and the buyer agrees to defend, indemnify and hold harmless Microchip from any and all damages, claims, suits, or expenses resulting from such use. No licenses are conveyed, implicitly or otherwise, under any Microchip intellectual property rights.

Trademarks

The Microchip name and logo, the Microchip logo, dsPIC, KEELOQ, KEELOQ logo, MPLAB, PIC, PICmicro, PICSTART, PIC^{32} logo, rfPIC and UNI/O are registered trademarks of Microchip Technology Incorporated in the U.S.A. and other countries.

FilterLab, Hampshire, HI-TECH C, Linear Active Thermistor, MXDEV, MXLAB, SEEVAL and The Embedded Control Solutions Company are registered trademarks of Microchip Technology Incorporated in the U.S.A.

Analog-for-the-Digital Age, Application Maestro, CodeGuard, dsPICDEM, dsPICDEM.net, dsPICworks, dsSPEAK, ECAN, ECONOMONITOR, FanSense, HI-TIDE, In-Circuit Serial Programming, ICSP, Mindi, MiWi, MPASM, MPLAB Certified logo, MPLIB, MPLINK, mTouch, Omniscient Code Generation, PICC, PICC-18, PICDEM, PICDEM.net, PICkit, PICtail, REAL ICE, rfLAB, Select Mode, Total Endurance, TSHARC, UniWinDriver, WiperLock and ZENA are trademarks of Microchip Technology Incorporated in the U.S.A. and other countries.

SQTP is a service mark of Microchip Technology Incorporated in the U.S.A.

All other trademarks mentioned herein are property of their respective companies.

© 2011, Microchip Technology Incorporated, Printed in the U.S.A., All Rights Reserved.

Printed on recycled paper.

ISBN: 978-1-61341-027-1

Microchip received ISO/TS-16949:2002 certification for its worldwide headquarters, design and wafer fabrication facilities in Chandler and Tempe, Arizona; Gresham, Oregon and design centers in California and India. The Company's quality system processes and procedures are for its PIC® MCUs and dsPIC® DSCs, KEELOQ® code hopping devices, Serial EEPROMs, microperipherals, nonvolatile memory and analog products. In addition, Microchip's quality system for the design and manufacture of development systems is ISO 9001:2000 certified.

QUALITY MANAGEMENT SYSTEM
CERTIFIED BY DNV
ISO/TS 16949:2002

© 2011 Microchip Technology Inc.

PIC18F46J50 FAMILY

28/44-Pin, Low-Power, High-Performance USB Microcontrollers

Power Management Features with nanoWatt XLP™ for Extreme Low-Power:

- Deep Sleep mode: CPU off, Peripherals off, Currents Down to 13 nA and 850 nA with RTCC:
  - Able to wake-up on external triggers, programmable WDT or RTCC alarm
  - Ultra Low-Power Wake-up (ULPWU)
- Sleep mode: CPU off, Peripherals off, SRAM on, Fast Wake-up, Currents Down to 105 nA, Typical
- Idle: CPU off, Peripherals on, Currents Down to 2.3 μA, Typical
- Run: CPU on, Peripherals on, Currents Down to 6.2 μA, Typical
- Timer1 Oscillator w/RTCC: 1 μA, 32 kHz, Typical
- Watchdog Timer: 0.8 μA, 2V, Typical

Special Microcontroller Features:

- Low-Power, High-Speed CMOS Flash Technology
- C Compiler Optimized Architecture for Re-Entrant Code
- Priority Levels for Interrupts
- Self-Programmable under Software Control
- 8 x 8 Single-Cycle Hardware Multiplier
- Extended Watchdog Timer (WDT):
  - Programmable period from 4 ms to 131s
- Single-Supply In-Circuit Serial Programming™ (ICSP™) via two pins
- In-Circuit Debug (ICD) w/Three Breakpoints via 2 Pins
- Operating Voltage Range of 2.0V to 3.6V
- On-Chip 2.5V Regulator
- Flash Program Memory of 10,000 Erase/Write Cycles Minimum and 20-Year Data Retention

Universal Serial Bus (USB) Features

- USB V2.0 Compliant
- Full Speed (12 Mbps) and Low Speed (1.5 Mbps)
- Supports Control, Interrupt, Isochronous and Bulk Transfers
- Supports up to 32 Endpoints (16 bidirectional)
- USB module can use any RAM Location on the Device as USB Endpoint Buffers
- On-Chip USB Transceiver with Crystal-less operation

Flexible Oscillator Structure:

- High-Precision Internal Oscillator (±0.15% typ.) for USB
- Two External Clock modes, up to 48 MHz (12 MIPS)
- Low-Power, 31 kHz Internal RC Oscillator
- Tunable Internal Oscillator (31 kHz to 8 MHz, or up to 48 MHz with PLL)
- Secondary Oscillator using Timer1 @ 32 kHz
- Fail-Safe Clock Monitor:
  - Allows for safe shutdown if any clock stops
- Two-Speed Oscillator Start-up
- Programmable Reference Clock Output Generator

Peripheral Highlights:

- Peripheral Pin Select:
  - Allows independent I/O mapping of many peripherals
  - Continuous hardware integrity checking and safety interlocks prevent unintentional configuration changes
- Hardware Real-Time Clock and Calendar (RTCC):
  - Provides clock, calendar and alarm functions
- High-Current Sink/Source 25 mA/25 mA (PORTB and PORTC)
- 5.5V Tolerant Inputs (digital only pins)
- Four Programmable External Interrupts
- Four Input Change Interrupts
- Two Enhanced Capture/Compare/PWM (ECCP) modules:
  - One, two or four PWM outputs
  - Selectable polarity
  - Programmable dead time
  - Auto-shutdown and auto-restart
  - Pulse steering control
- Two Master Synchronous Serial Port (MSSP) modules Supporting Three-Wire SPI (all four modes) and I^2C™ Master and Slave modes
- Full-Duplex Master/Slave SPI DMA Engine
- 8-Bit Parallel Master Port/Enhanced Parallel Slave Port
- Two-Rail – Rail Analog Comparators with Input Multiplexing
- 10-Bit, up to 13-Channel Analog-to-Digital (A/D) Converter module:
  - Auto-acquisition capability
  - Conversion available during Sleep
  - Self-calibration
- High/Low-Voltage Detect module
- Charge Time Measurement Unit (CTMU):
  - Supports capacitive touch sensing for touch screens and capacitive switches
  - Provides a precise resolution time measurement for both flow measurement and simple temperature sensing
- Two Enhanced USART modules:
  - Supports RS-485, RS-232 and LIN/J2602
  - Auto-Wake-up on Start bit
- Auto-Baud Detect

PIC18F/LF[1] Device	Pins	Program Memory (bytes)	SRAM (bytes)	Remappable Pins	Timers 8/16-Bit	ECCP/(PWM)	EUSART	MSSP			10-Bit A/D (ch)	Comparators	Deep Sleep	PMP/PSP	CTMU	RTCC	USB
									SPI w/DMA	I^2C™							
PIC18F24J50	28	16K	3776	16	2/3	2	2	2	Y	Y	10	2	Y	N	Y	Y	Y
PIC18F25J50	28	32K	3776	16	2/3	2	2	2	Y	Y	10	2	Y	N	Y	Y	Y
PIC18F26J50	28	64K	3776	16	2/3	2	2	2	Y	Y	10	2	Y	N	Y	Y	Y
PIC18F44J50	44	16K	3776	22	2/3	2	2	2	Y	Y	13	2	Y	Y	Y	Y	Y
PIC18F45J50	44	32K	3776	22	2/3	2	2	2	Y	Y	13	2	Y	Y	Y	Y	Y
PIC18F46J50	44	64K	3776	22	2/3	2	2	2	Y	Y	13	2	Y	Y	Y	Y	Y
PIC18LF24J50	28	16K	3776	16	2/3	2	2	2	Y	Y	10	2	N	N	Y	Y	Y
PIC18LF25J50	28	32K	3776	16	2/3	2	2	2	Y	Y	10	2	N	N	Y	Y	Y
PIC18LF26J50	28	64K	3776	16	2/3	2	2	2	Y	Y	10	2	N	N	Y	Y	Y
PIC18LF44J50	44	16K	3776	22	2/3	2	2	2	Y	Y	13	2	N	Y	Y	Y	Y
PIC18LF45J50	44	32K	3776	22	2/3	2	2	2	Y	Y	13	2	N	Y	Y	Y	Y
PIC18LF46J50	44	64K	3776	22	2/3	2	2	2	Y	Y	13	2	N	Y	Y	Y	Y

Note 1: See **Section 1.3 "Details on Individual Family Devices"**, **Section 4.6 "Deep Sleep Mode"** and **Section 27.3 "On-Chip Voltage Regulator"** for details describing the functional differences between PIC18F and PIC18LF variants in this device family.

© 2011 Microchip Technology Inc.

Pin Diagrams

28-Pin SPDIP/SOIC/SSOP(1)

= Pins are up to 5.5V tolerant

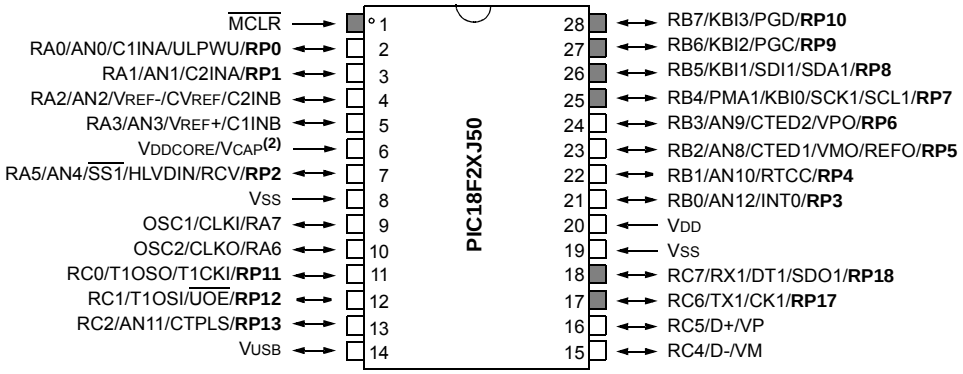

28-Pin QFN(1,3)

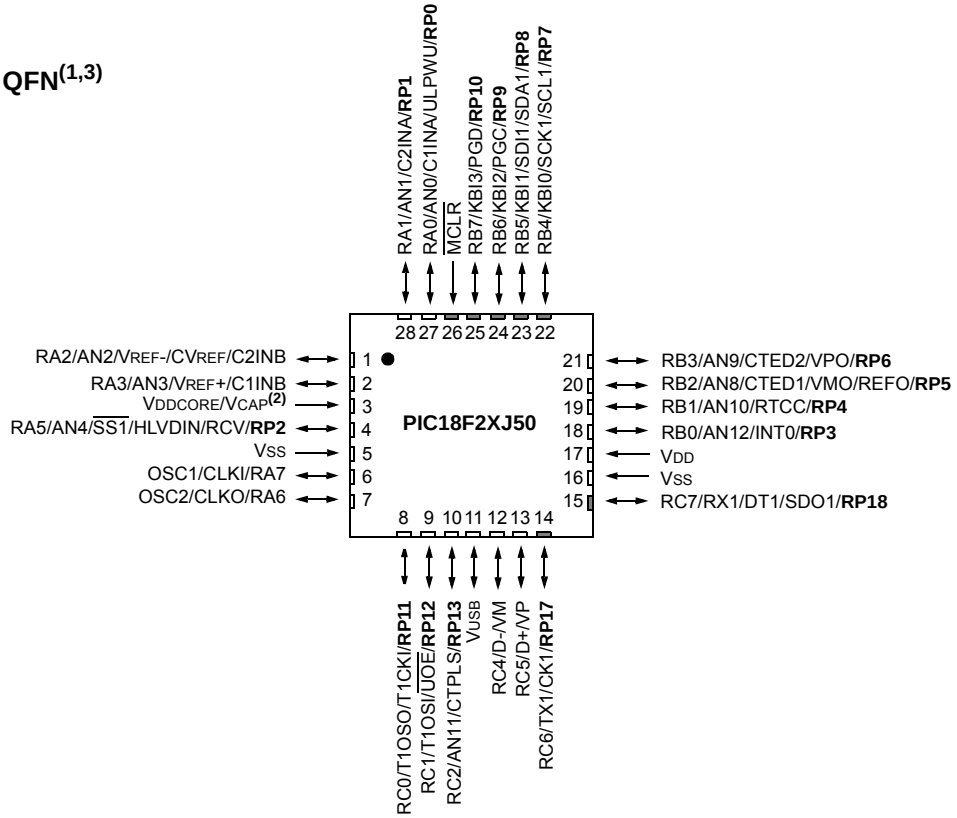

Legend: **RPn** represents remappable pins.

Note 1: Some input and output functions are routed through the Peripheral Pin Select (PPS) module and can be dynamically assigned to any of the RPn pins. For a list of the input and output functions, see Table 10-13 and Table 10-14, respectively. For details on configuring the PPS module, see **Section 10.7 "Peripheral Pin Select (PPS)"**.

2: See **Section 27.3 "On-Chip Voltage Regulator"** for details on how to connect the VDDCORE/VCAP pin.

3: For the QFN package, it is recommended that the bottom pad be connected to VSS.

Pin Diagrams (Continued)

44-Pin QFN(1,3,4)

= Pins are up to 5.5V tolerant

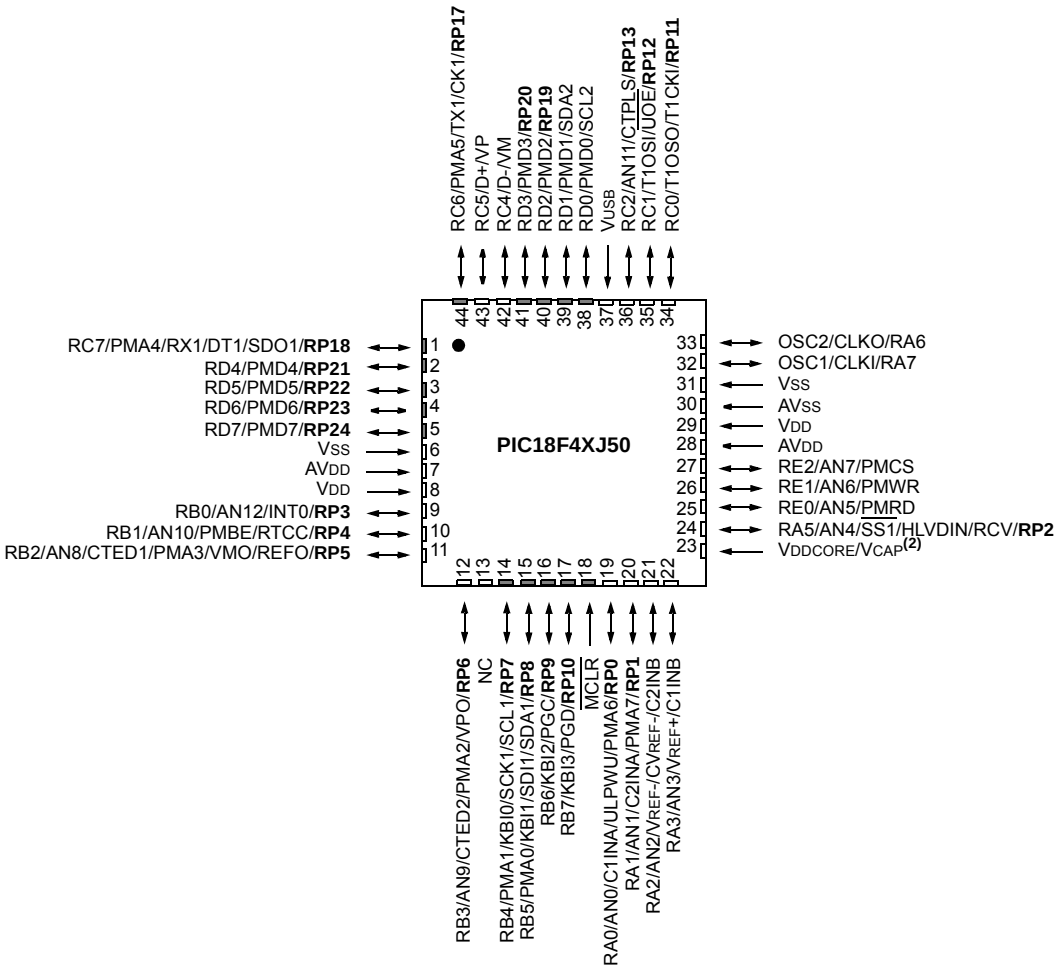

Legend: **RPn** represents remappable pins.

Note 1: Some input and output functions are routed through the Peripheral Pin Select (PPS) module and can be dynamically assigned to any of the RPn pins. For a list of the input and output functions, see Table 10-13 and Table 10-14, respectively. For details on configuring the PPS module, see **Section 10.7 "Peripheral Pin Select (PPS)"**.

2: See **Section 27.3 "On-Chip Voltage Regulator"** for details on how to connect the VDDCORE/VCAP pin.

3: For the QFN package, it is recommended that the bottom pad be connected to VSS.

4: On 44-pin QFN devices, AVDD and AVSS reference sources are intended to be externally connected to VDD and VSS levels. Other package types tie AVDD and AVSS to VDD and VSS internally.

© 2011 Microchip Technology Inc.

Pin Diagrams (Continued)

44-Pin TQFP(1)

= Pins are up to 5.5V tolerant

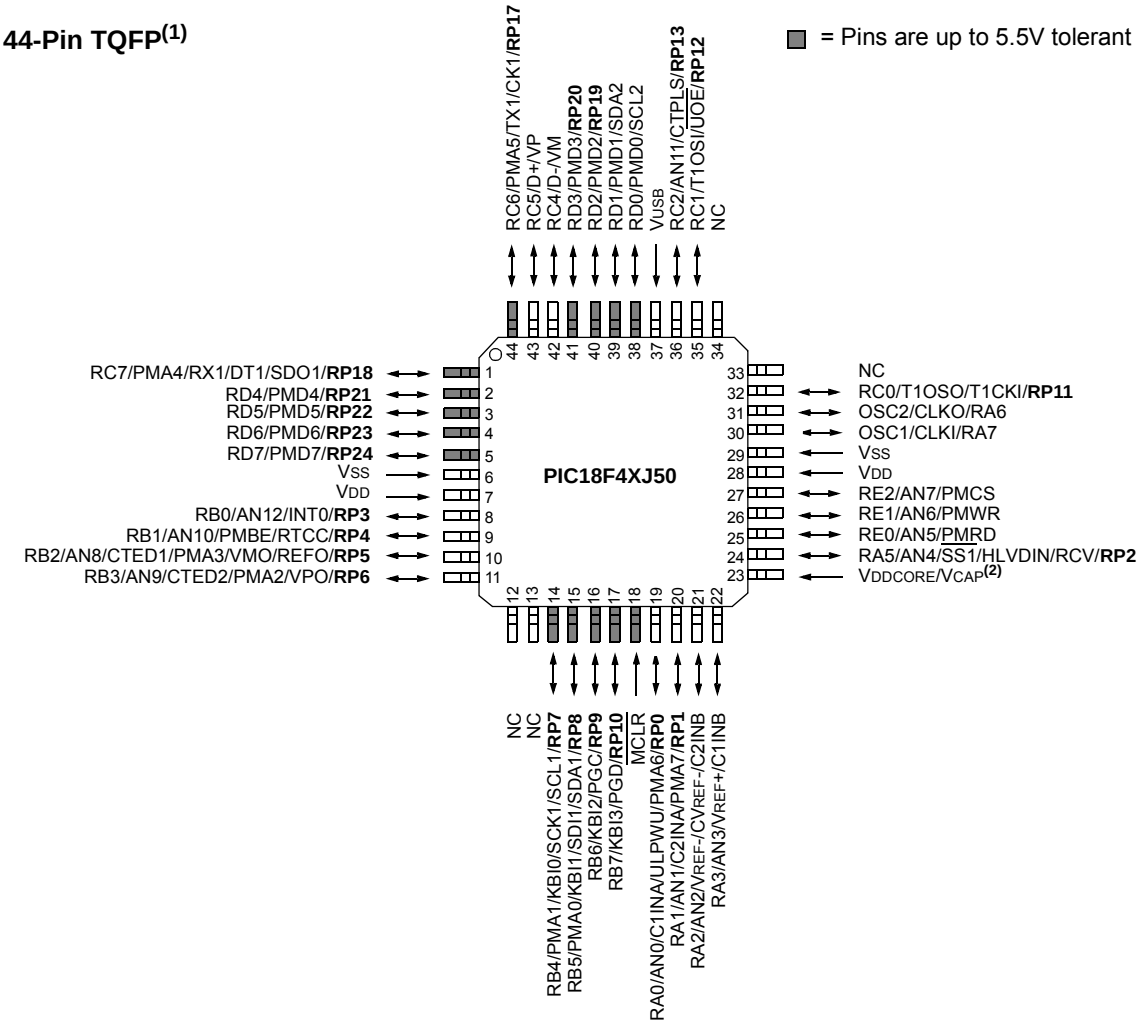

Legend: **RPn** represents remappable pins.

Note 1: Some input and output functions are routed through the Peripheral Pin Select (PPS) module and can be dynamically assigned to any of the RPn pins. For a list of the input and output functions, see Table 10-13 and Table 10-14, respectively. For details on configuring the PPS module, see **Section 10.7 "Peripheral Pin Select (PPS)"**.

2: See **Section 27.3 "On-Chip Voltage Regulator"** for details on how to connect the VDDCORE/VCAP pin.

Table of Contents

1.0 Device Overview 11
2.0 Guidelines for Getting Started with PIC18FJ Microcontrollers 29
3.0 Oscillator Configurations 35
4.0 Low-Power Modes 47
5.0 Reset 63
6.0 Memory Organization 77
7.0 Flash Program Memory 103
8.0 8 x 8 Hardware Multiplier 113
9.0 Interrupts 115
10.0 I/O Ports 131
11.0 Parallel Master Port (PMP) 169
12.0 Timer0 Module 195
13.0 Timer1 Module 199
14.0 Timer2 Module 211
15.0 Timer3 Module 213
16.0 Timer4 Module 223
17.0 Real-Time Clock and Calendar (RTCC) 225
18.0 Enhanced Capture/Compare/PWM (ECCP) Module 245
19.0 Master Synchronous Serial Port (MSSP) Module 269
20.0 Enhanced Universal Synchronous Asynchronous Receiver Transmitter (EUSART) 323
21.0 10-bit Analog-to-Digital Converter (A/D) Module 347
22.0 Universal Serial Bus (USB) 357
23.0 Comparator Module 385
24.0 Comparator Voltage Reference Module 391
25.0 High/Low Voltage Detect (HLVD) 395
26.0 Charge Time Measurement Unit (CTMU) 401
27.0 Special Features of the CPU 417
28.0 Instruction Set Summary 435
29.0 Development Support 485
30.0 Electrical Characteristics 489
31.0 Packaging Information 531
Appendix A: Revision History 545
Appendix B: Device Differences 545
The Microchip Web Site 559
Customer Change Notification Service 559
Customer Support 559
Reader Response 560
Product Identification System 561

© 2011 Microchip Technology Inc.

TO OUR VALUED CUSTOMERS

It is our intention to provide our valued customers with the best documentation possible to ensure successful use of your Microchip products. To this end, we will continue to improve our publications to better suit your needs. Our publications will be refined and enhanced as new volumes and updates are introduced.

If you have any questions or comments regarding this publication, please contact the Marketing Communications Department via E-mail at **docerrors@microchip.com** or fax the **Reader Response Form** in the back of this data sheet to (480) 792-4150. We welcome your feedback.

Most Current Data Sheet

To obtain the most up-to-date version of this data sheet, please register at our Worldwide Web site at:

http://www.microchip.com

You can determine the version of a data sheet by examining its literature number found on the bottom outside corner of any page. The last character of the literature number is the version number, (e.g., DS30000A is version A of document DS30000).

Errata

An errata sheet, describing minor operational differences from the data sheet and recommended workarounds, may exist for current devices. As device/documentation issues become known to us, we will publish an errata sheet. The errata will specify the revision of silicon and revision of document to which it applies.

To determine if an errata sheet exists for a particular device, please check with one of the following:

- Microchip's Worldwide Web site; http://www.microchip.com
- Your local Microchip sales office (see last page)

When contacting a sales office, please specify which device, revision of silicon and data sheet (include literature number) you are using.

Customer Notification System

Register on our web site at **www.microchip.com** to receive the most current information on all of our products.

NOTES:

© 2011 Microchip Technology Inc.

1.0 DEVICE OVERVIEW

This document contains device-specific information for the following devices:

- PIC18F24J50
- PIC18F25J50
- PIC18F26J50
- PIC18F44J50
- PIC18F45J50
- PIC18F46J50
- PIC18LF24J50
- PIC18LF25J50
- PIC18LF26J50
- PIC18LF44J50
- PIC18LF45J50
- PIC18LF46J50

This family introduces a new line of low-voltage Universal Serial Bus (USB) microcontrollers with the main traditional advantage of all PIC18 microcontrollers, namely, high computational performance and a rich feature set at an extremely competitive price point. These features make the PIC18F46J50 family a logical choice for many high-performance applications, where cost is a primary consideration.

1.1 Core Features

1.1.1 nanoWatt TECHNOLOGY

All of the devices in the PIC18F46J50 family incorporate a range of features that can significantly reduce power consumption during operation. Key features are:

- **Alternate Run Modes:** By clocking the controller from the Timer1 source or the internal RC oscillator, power consumption during code execution can be reduced by as much as 90%.
- **Multiple Idle Modes:** The controller can also run with its CPU core disabled but the peripherals still active. In these states, power consumption can be reduced even further, to as little as 4% of normal operational requirements.
- **On-the-Fly Mode Switching:** The power-managed modes are invoked by user code during operation, allowing the users to incorporate power-saving ideas into their application's software design.

1.1.2 UNIVERSAL SERIAL BUS (USB)

Devices in the PIC18F46J50 family incorporate a fully-featured USB communications module with a built-in transceiver that is compliant with the *"USB Specification Revision 2.0"*. The module supports both low-speed and full-speed communication for all supported data transfer types.

1.1.3 OSCILLATOR OPTIONS AND FEATURES

All of the devices in the PIC18F46J50 family offer five different oscillator options, allowing users a range of choices in developing application hardware. These include:

- Two Crystal modes, using crystals or ceramic resonators.
- Two External Clock modes, offering the option of a divide-by-4 clock output.
- An internal oscillator block, which provides an 8 MHz clock and an INTRC source (approximately 31 kHz, stable over temperature and V_{DD}), as well as a range of six user-selectable clock frequencies, between 125 kHz to 4 MHz, for a total of eight clock frequencies. This option frees an oscillator pin for use as an additional general purpose I/O.
- A Phase Lock Loop (PLL) frequency multiplier, available to the high-speed crystal, and external and internal oscillators, providing a clock speed up to 48 MHz.
- Dual clock operation, allowing the USB module to run from a high-frequency oscillator while the rest of the microcontroller is clocked at a different frequency.

The internal oscillator block provides a stable reference source that gives the PIC18F46J50 family additional features for robust operation:

- **Fail-Safe Clock Monitor:** This option constantly monitors the main clock source against a reference signal provided by the internal oscillator. If a clock failure occurs, the controller is switched to the internal oscillator, allowing for continued low-speed operation or a safe application shutdown.
- **Two-Speed Start-up:** This option allows the internal oscillator to serve as the clock source from Power-on Reset (POR), or wake-up from Sleep mode, until the primary clock source is available.

1.1.4 EXPANDED MEMORY

The PIC18F46J50 family provides ample room for application code, from 16 Kbytes to 64 Kbytes of code space. The Flash cells for program memory are rated to last in excess of 10000 erase/write cycles. Data retention without refresh is conservatively estimated to be greater than 20 years.

The Flash program memory is readable and writable during normal operation. The PIC18F46J50 family also provides plenty of room for dynamic application data with up to 3.8 Kbytes of data RAM.

1.1.5 EXTENDED INSTRUCTION SET

The PIC18F46J50 family implements the optional extension to the PIC18 instruction set, adding eight new instructions and an Indexed Addressing mode. Enabled as a device configuration option, the extension has been specifically designed to optimize re-entrant application code originally developed in high-level languages, such as C.

1.1.6 EASY MIGRATION

Regardless of the memory size, all devices share the same rich set of peripherals, allowing for a smooth migration path as applications grow and evolve.

The consistent pinout scheme used throughout the entire family also aids in migrating to the next larger device.

The PIC18F46J50 family is also pin compatible with other PIC18 families, such as the PIC18F4550, PIC18F2450 and PIC18F45J10. This allows a new dimension to the evolution of applications, allowing developers to select different price points within Microchip's PIC18 portfolio, while maintaining the same feature set.

1.2 Other Special Features

- **Communications:** The PIC18F46J50 family incorporates a range of serial and parallel communication peripherals, including a fully featured USB communications module that is compliant with the *"USB Specification Revision 2.0"*. This device also includes two independent Enhanced USARTs and two Master Synchronous Serial Port (MSSP) modules, capable of both Serial Peripheral Interface (SPI) and I^2C™ (Master and Slave) modes of operation. The device also has a parallel port and can be configured to serve as either a Parallel Master Port (PMP) or as a Parallel Slave Port (PSP).
- **ECCP Modules:** All devices in the family incorporate three Enhanced Capture/Compare/PWM (ECCP) modules to maximize flexibility in control applications. Up to four different time bases may be used to perform several different operations at once. Each of the ECCPs offers up to four PWM outputs, allowing for a total of eight PWMs. The ECCPs also offer many beneficial features, including polarity selection, programmable dead time, auto-shutdown and restart and Half-Bridge and Full-Bridge Output modes.
- **10-Bit A/D Converter:** This module incorporates programmable acquisition time, allowing for a channel to be selected and a conversion to be initiated without waiting for a sampling period, and thus, reducing code overhead.
- **Extended Watchdog Timer (WDT):** This enhanced version incorporates a 16-bit prescaler, allowing an extended time-out range that is stable across operating voltage and temperature. See **Section 30.0 "Electrical Characteristics"** for time-out periods.

1.3 Details on Individual Family Devices

Devices in the PIC18F46J50 family are available on 28-pin and 44-pin packages. Block diagrams for the two groups are shown in Figure 1-1 and Figure 1-2. The devices are differentiated from each other in two ways:

- Flash program memory (three sizes: 16 Kbytes for the PIC18FX4J50, 32 Kbytes for PIC18FX5J50 devices and 64 Kbytes for PIC18FX6J50)
- I/O ports (three bidirectional ports on 28-pin devices, five bidirectional ports on 44-pin devices)

All other features for devices in this family are identical. These are summarized in Table 1-1 and Table 1-2.

The pinouts for the PIC18F2XJ50 devices are listed in Table 1-3. The pinouts for the PIC18F4XJ50 devices are shown in Table 1-4.

The PIC18F46J50 family of devices provides an on-chip voltage regulator to supply the correct voltage levels to the core. Parts designated with an "F" part number (such as PIC18**F**46J50) have the voltage regulator enabled.

These parts can run from 2.15V-3.6V on V_{DD}, but should have the V_{DDCORE} pin connected to V_{SS} through a low-ESR capacitor. Parts designated with an "LF" part number (such as PIC18**LF**46J50) do not enable the voltage regulator. For "LF" parts, an external supply of 2.0V-2.7V has to be supplied to the V_{DDCORE} pin while 2.0V-3.6V can be supplied to V_{DD} (V_{DDCORE} should never exceed V_{DD}).

For more details about the internal voltage regulator, see **Section 27.3 "On-Chip Voltage Regulator"**.

© 2011 Microchip Technology Inc.

TABLE 1-1: DEVICE FEATURES FOR THE PIC18F2XJ50 (28-PIN DEVICES)

Features	PIC18F24J50	PIC18F25J50	PIC18F26J50
Operating Frequency	DC – 48 MHz	DC – 48 MHz	DC – 48 MHz
Program Memory (Bytes)	16K	32K	64K
Program Memory (Instructions)	8,192	16,384	32,768
Data Memory (Bytes)	3.8K	3.8K	3.8K
Interrupt Sources	30		
I/O Ports	Ports A, B, C		
Timers	5		
Enhanced Capture/Compare/PWM Modules	2		
Serial Communications	MSSP (2), Enhanced USART (2), USB		
Parallel Communications (PMP/PSP)	No		
10-Bit Analog-to-Digital Module	10 Input Channels		
Resets (and Delays)	POR, BOR, RESET Instruction, Stack Full, Stack Underflow, $\overline{\text{MCLR}}$, WDT (PWRT, OST)		
Instruction Set	75 Instructions, 83 with Extended Instruction Set Enabled		
Packages	28-Pin QFN, SOIC, SSOP and SPDIP (300 mil)		

TABLE 1-2: DEVICE FEATURES FOR THE PIC18F4XJ50 (44-PIN DEVICES)

Features	PIC18F44J50	PIC18F45J50	PIC18F46J50
Operating Frequency	DC – 48 MHz	DC – 48 MHz	DC – 48 MHz
Program Memory (Bytes)	16K	32K	64K
Program Memory (Instructions)	8,192	16,384	32,768
Data Memory (Bytes)	3.8K	3.8K	3.8K
Interrupt Sources	30		
I/O Ports	Ports A, B, C, D, E		
Timers	5		
Enhanced Capture/Compare/PWM Modules	2		
Serial Communications	MSSP (2), Enhanced USART (2), USB		
Parallel Communications (PMP/PSP)	Yes		
10-Bit Analog-to-Digital Module	13 Input Channels		
Resets (and Delays)	POR, BOR, RESET Instruction, Stack Full, Stack Underflow, $\overline{\text{MCLR}}$, WDT (PWRT, OST)		
Instruction Set	75 Instructions, 83 with Extended Instruction Set Enabled		
Packages	44-Pin QFN and TQFP		

FIGURE 1-1: PIC18F2XJ50 (28-PIN) BLOCK DIAGRAM

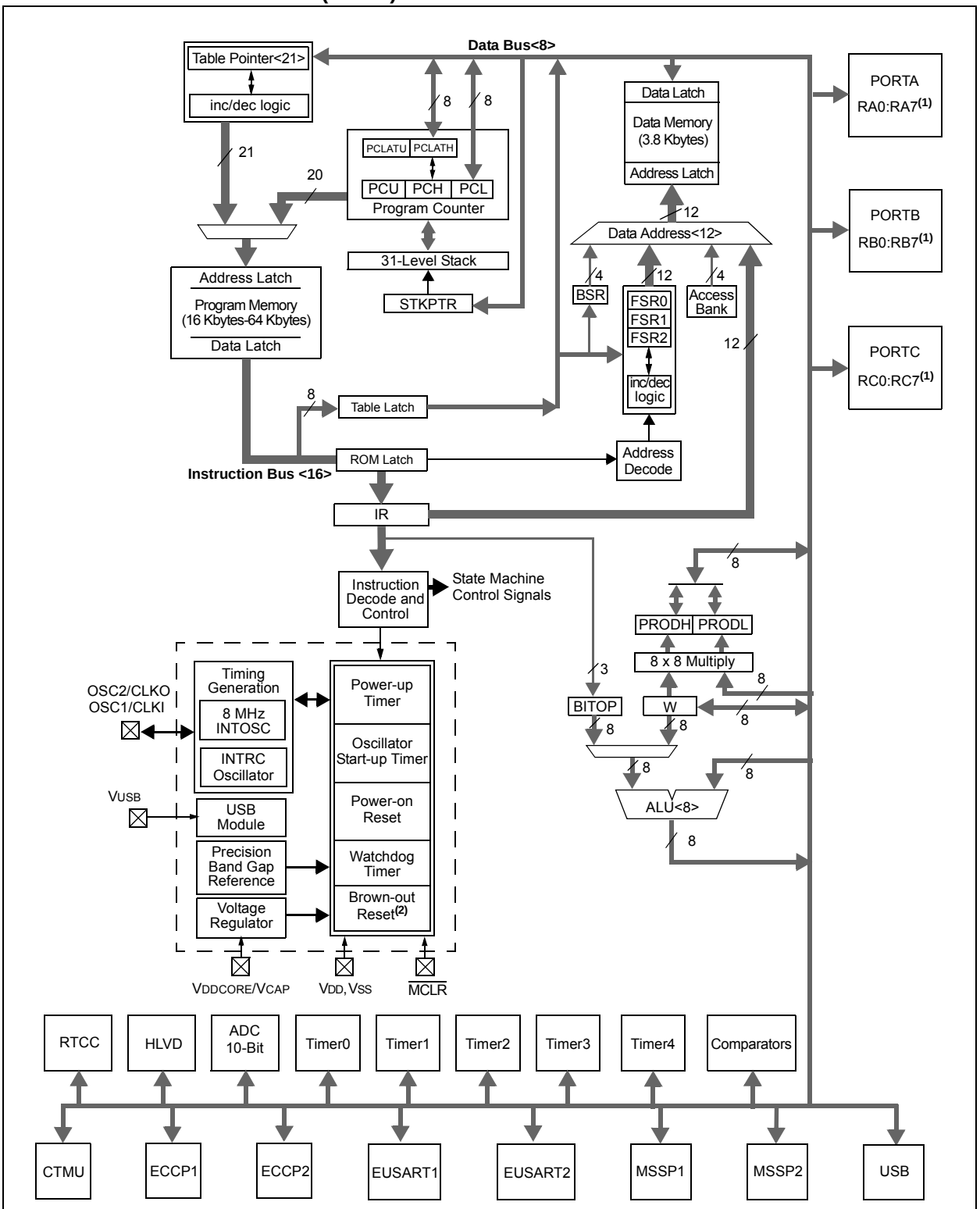

Note 1: See Table 1-3 for I/O port pin descriptions.

2: BOR functionality is provided when the on-board voltage regulator is enabled.

© 2011 Microchip Technology Inc.

FIGURE 1-2: PIC18F4XJ50 (44-PIN) BLOCK DIAGRAM

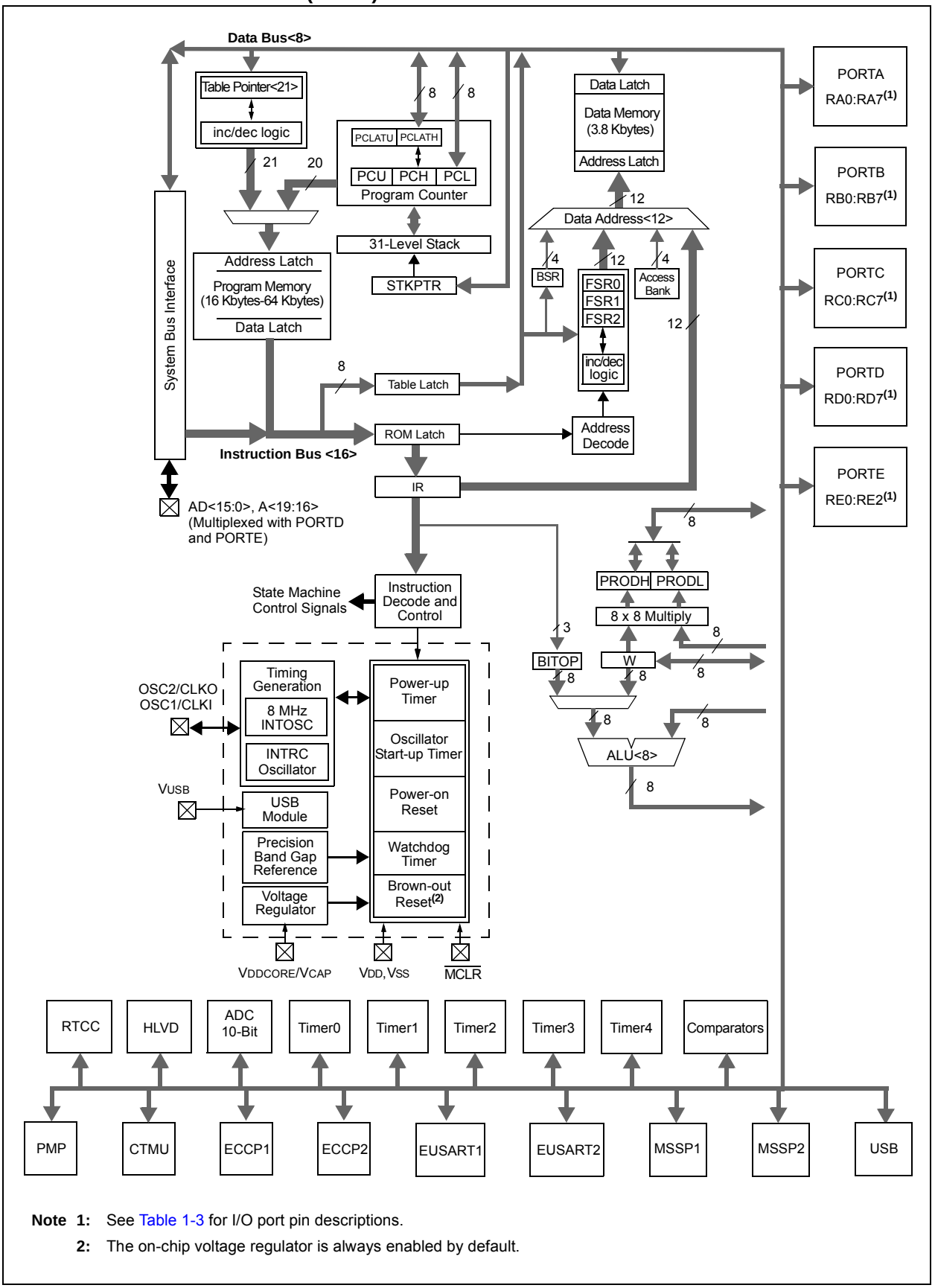

Note 1: See Table 1-3 for I/O port pin descriptions.

2: The on-chip voltage regulator is always enabled by default.

TABLE 1-3: PIC18F2XJ50 PINOUT I/O DESCRIPTIONS

Pin Name	Pin Number		Pin Type	Buffer Type	Description
	28-SPDIP/ SSOP/ SOIC	28-QFN			
$\overline{MCLR}$	1	26	I	ST	Master Clear (Reset) input. This pin is an active-low Reset to the device.
OSC1/CLKI/RA7	9	6			Oscillator crystal or external clock input.
OSC1			I	ST	Oscillator crystal input or external clock source input. ST buffer when configured in RC mode; CMOS otherwise. Main oscillator input connection.
CLKI			I	CMOS	External clock source input; always associated with pin function, OSC1 (see related OSC1/CLKI pins).
RA7(1)			I/O	TTL	Digital I/O.
OSC2/CLKO/RA6	10	7			Oscillator crystal or clock output.
OSC2			O	—	Oscillator crystal output. Connects to crystal or resonator in Crystal Oscillator mode.
CLKO			O	—	Main oscillator feedback output connection. In RC mode, OSC2 pin outputs CLKO, which has 1/4 the frequency of OSC1 and denotes the instruction cycle rate.
RA6(1)			I/O	TTL	Digital I/O.

Legend: TTL = TTL compatible input; CMOS = CMOS compatible input or output; ST = Schmitt Trigger input with CMOS levels; Analog = Analog input; I = Input; O = Output; P = Power; OD = Open-Drain (no P diode to V_{DD}); DIG = Digital output; I^2C™ = Open-Drain, I^2C-specific

Note 1: RA7 and RA6 will be disabled if OSC1 and OSC2 are used for the clock function.

© 2011 Microchip Technology Inc.

TABLE 1-3: PIC18F2XJ50 PINOUT I/O DESCRIPTIONS (CONTINUED)

Pin Name	Pin Number		Pin Type	Buffer Type	Description
	28-SPDIP/ SSOP/ SOIC	28-QFN			
					PORTA is a bidirectional I/O port.
RA0/AN0/C1INA/ULPWU/RP0	2	27			
RA0			I/O	DIG	Digital I/O.
AN0			I	Analog	Analog Input 0.
C1INA			I	Analog	Comparator 1 Input A.
ULPWU			I	Analog	Ultra Low-Power Wake-up input.
RP0			I/O	DIG	Remappable Peripheral Pin 0 input/output.
RA1/AN1/C2INA/RP1	3	28			
RA1			I	DIG	Digital I/O.
AN1			O	Analog	Analog Input 1.
C2INA			I	Analog	Comparator 2 Input A.
RP1			I/O	DIG	Remappable Peripheral Pin 1 input/output.
RA2/AN2/VREF-/CVREF/C2INB	4	1			
RA2			I/O	DIG	Digital I/O.
AN2			I	Analog	Analog Input 2.
VREF-			O	Analog	A/D reference voltage (low) input.
CVREF			I	Analog	Comparator reference voltage output.
C2INB			I	Analog	Comparator 2 Input B.
RA3/AN3/VREF+/C1INB	5	2			
RA3			I/O	DIG	Digital I/O.
AN3			I	Analog	Analog Input 3.
VREF+			I	Analog	A/D reference voltage (high) input.
C1INB			I	Analog	Comparator 1 Input B.
RA5/AN4/$\overline{SS1}$/HLVDIN/ RCV/RP2	7	4			
RA5			I/O	DIG	Digital I/O.
AN4			I	Analog	Analog Input 4.
$\overline{SS1}$			I	TTL	SPI slave select input.
HLVDIN			I	Analog	Low-Voltage Detect (LVD) input.
RCV			I	Analog	External USB transceiver RCV input.
RP2			I/O	DIG	Remappable Peripheral Pin 2 input/output.
RA6(1)					See the OSC2/CLKO/RA6 pin.
RA7(1)					See the OSC1/CLKI/RA7 pin.

Legend: TTL = TTL compatible input; CMOS = CMOS compatible input or output; ST = Schmitt Trigger input with CMOS levels; Analog = Analog input; I = Input; O = Output; P = Power; OD = Open-Drain (no P diode to VDD); DIG = Digital output; I^2C™ = Open-Drain, I^2C-specific

Note 1: RA7 and RA6 will be disabled if OSC1 and OSC2 are used for the clock function.

TABLE 1-3: PIC18F2XJ50 PINOUT I/O DESCRIPTIONS (CONTINUED)

Pin Name	Pin Number		Pin Type	Buffer Type	Description
	28-SPDIP/ SSOP/ SOIC	28-QFN			
					PORTB is a bidirectional I/O port. PORTB can be software programmed for internal weak pull-ups on all inputs.
RB0/AN12/INT0/RP3	21	18			
RB0			I/O	DIG	Digital I/O.
AN12			I	Analog	Analog Input 12.
INT0			I	ST	External Interrupt 0.
RP3			I/O	DIG	Remappable Peripheral Pin 3 input/output.
RB1/AN10/RTCC/RP4	22	19			
RB1			I/O	DIG	Digital I/O.
AN10			I	Analog	Analog Input 10.
RTCC			O	DIG	Real-Time Clock Calendar (RTCC) output.
RP4			I/O	DIG	Remappable Peripheral Pin 4 input/output.
RB2/AN8/CTED1/VMO/ REFO/RP5	23	20			
RB2			I/O	DIG	Digital I/O.
AN8			I	Analog	Analog Input 8.
CTED1			I	ST	CTMU Edge 1 input.
VMO			O	DIG	External USB transceiver D- data output.
REFO			O	DIG	Reference output clock.
RP5			I/O	DIG	Remappable Peripheral Pin 5 input/output.
RB3/AN9/CTED2/VPO/RP6	24	21			
RB3			I/O	DIG	Digital I/O.
AN9			I	Analog	Analog Input 9.
CTED2			I/O	ST	CTMU Edge 2 input.
VPO			O	DIG	External USB transceiver D+ data output.
RP6			I	DIG	Remappable Peripheral Pin 6 input/output.

Legend: TTL = TTL compatible input; CMOS = CMOS compatible input or output; ST = Schmitt Trigger input with CMOS levels; Analog = Analog input; I = Input; O = Output; P = Power; OD = Open-Drain (no P diode to V_{DD}); DIG = Digital output; I^2C™ = Open-Drain, I^2C-specific

Note 1: RA7 and RA6 will be disabled if OSC1 and OSC2 are used for the clock function.

© 2011 Microchip Technology Inc.

TABLE 1-3: PIC18F2XJ50 PINOUT I/O DESCRIPTIONS (CONTINUED)

Pin Name	Pin Number		Pin Type	Buffer Type	Description
	28-SPDIP/ SSOP/ SOIC	28-QFN			
					PORTB (continued)
RB4/KBI0/SCK1/SCL1/RP7	25	22			
RB4			I/O	DIG	Digital I/O.
KBI0			I	TTL	Interrupt-on-change pin.
SCK1			I/O	DIG	Synchronous serial clock input/output.
SCL1			I/O	I^2C	I^2C clock input/output.
RP7			I/O	DIG	Remappable Peripheral Pin 7 input/output.
RB5/KBI1/SDI1/SDA1/RP8	26	23			
RB5			I/O	DIG	Digital I/O.
KBI1			I	TTL	Interrupt-on-change pin.
SDI1			I	ST	SPI data input.
SDA1			I/O	I^2C	I^2C™ data input/output.
RP8			I/O	DIG	Remappable Peripheral Pin 8 input/output.
RB6/KBI2/PGC/RP9	27	24			
RB6			I/O	DIG	Digital I/O.
KBI2			I	TTL	Interrupt-on-change pin.
PGC			I	ST	ICSP™ clock input.
RP9			I/O	DIG	Remappable Peripheral Pin 9 input/output.
RB7/KBI3/PGD/RP10	28	25			
RB7			I/O	DIG	Digital I/O.
KBI3			I	TTL	Interrupt-on-change pin.
PGD			I/O	ST	In-Circuit Debugger and ICSP programming data pin.
RP10			I/O	DIG	Remappable Peripheral Pin 10 input/output.

Legend: TTL = TTL compatible input; CMOS = CMOS compatible input or output; ST = Schmitt Trigger input with CMOS levels; Analog = Analog input; I = Input; O = Output; P = Power; OD = Open-Drain (no P diode to V_{DD}); DIG = Digital output; I^2C™ = Open-Drain, I^2C-specific

Note 1: RA7 and RA6 will be disabled if OSC1 and OSC2 are used for the clock function.

TABLE 1-3: PIC18F2XJ50 PINOUT I/O DESCRIPTIONS (CONTINUED)

Pin Name	Pin Number		Pin Type	Buffer Type	Description
	28-SPDIP/ SSOP/ SOIC	28-QFN			
					PORTC is a bidirectional I/O port.
RC0/T1OSO/T1CKI/RP11	11	8			
RC0			I/O	ST	Digital I/O.
T1OSO			O	Analog	Timer1 oscillator output.
T1CKI			I	ST	Timer1 external digital clock input.
RP11			I/O	DIG	Remappable Peripheral Pin 11 input/output.
RC1/T1OSI/$\overline{\text{UOE}}$/RP12	12	9			
RC1			I/O	ST	Digital I/O.
T1OSI			I	Analog	Timer1 oscillator input.
$\overline{\text{UOE}}$			O	DIG	External USB transceiver NOE output.
RP12			I/O	DIG	Remappable Peripheral Pin 12 input/output.
RC2/AN11/CTPLS/RP13	13	10			
RC2			I/O	ST	Digital I/O.
AN11			I	Analog	Analog Input 11.
CTPLS			O	DIG	CTMU pulse generator output.
RP13			I/O	DIG	Remappable Peripheral Pin 13 input/output.
RC4/D-/VM	15	12			
RC4			I	TTL	Digital I.
D-			I/O	—	USB bus minus line input/output.
VM			I	TTL	External USB transceiver FM input.
RC5/D+/VP	16	13			
RC5			I	TTL	Digital I.
D+			I/O	DIG	USB bus plus line input/output.
VP			I	TTL	External USB transceiver VP input.
RC6/TX1/CK1/RP17	17	14			
RC6			I/O	ST	Digital I/O.
TX1			O	DIG	EUSART1 asynchronous transmit.
CK1			I/O	ST	EUSART1 synchronous clock (see related RX1/DT1).
RP17			I/O	DIG	Remappable Peripheral Pin 17 input/output.
RC7/RX1/DT1/SDO1/RP18	18	15			
RC7			I/O	ST	Digital I/O.
RX1			I	ST	Asynchronous serial receive data input.
DT1			I/O	ST	Synchronous serial data output/input.
SDO1			O	DIG	SPI data output.
RP18			I/O	DIG	Remappable Peripheral Pin 18 input/output.

Legend: TTL = TTL compatible input; CMOS = CMOS compatible input or output; ST = Schmitt Trigger input with CMOS levels; Analog = Analog input; I = Input; O = Output; P = Power; OD = Open-Drain (no P diode to V_{DD}); DIG = Digital output; I^2C™ = Open-Drain, I^2C-specific

Note 1: RA7 and RA6 will be disabled if OSC1 and OSC2 are used for the clock function.

© 2011 Microchip Technology Inc.

TABLE 1-3: PIC18F2XJ50 PINOUT I/O DESCRIPTIONS (CONTINUED)

Pin Name	Pin Number		Pin Type	Buffer Type	Description
	28-SPDIP/ SSOP/ SOIC	28-QFN			
VSS1	8	5	P	—	Ground reference for logic and I/O pins.
VSS2	19	16	—	—	
VDD	20	17	P	—	Positive supply for peripheral digital logic and I/O pins.
VDDCORE/VCAP	6	3	—	—	Core logic power or external filter capacitor connection.
VDDCORE			P	—	Positive supply for microcontroller core logic (regulator disabled).
VCAP			P	—	External filter capacitor connection (regulator enabled).
VUSB	14	11	P	—	USB voltage input pin.

Legend: TTL = TTL compatible input; CMOS = CMOS compatible input or output; ST = Schmitt Trigger input with CMOS levels; Analog = Analog input; I = Input; O = Output; P = Power; OD = Open-Drain (no P diode to VDD); DIG = Digital output; I^2C™ = Open-Drain, I^2C-specific

Note 1: RA7 and RA6 will be disabled if OSC1 and OSC2 are used for the clock function.

TABLE 1-4: PIC18F4XJ50 PINOUT I/O DESCRIPTIONS

Pin Name	Pin Number		Pin Type	Buffer Type	Description
	44-QFN	44-TQFP			
$\overline{MCLR}$	18	18	I	ST	Master Clear (Reset) input; this is an active-low Reset to the device.
OSC1/CLKI/RA7	32	30			Oscillator crystal or external clock input.
OSC1			I	ST	Oscillator crystal input or external clock source input. ST buffer when configured in RC mode; otherwise CMOS. Main oscillator input connection.
CLKI			I	CMOS	External clock source input; always associated with pin function, OSC1 (see related OSC1/CLKI pins).
RA7(1)			I/O	TTL	Digital I/O.
OSC2/CLKO/RA6	33	31			Oscillator crystal or clock output.
OSC2			O	—	Oscillator crystal output. Connects to crystal or resonator in Crystal Oscillator mode.
CLKO			O	—	Main oscillator feedback output connection in RC mode, OSC2 pin outputs CLKO, which has 1/4 the frequency of OSC1 and denotes the instruction cycle rate.
RA6(1)			I/O	TTL	Digital I/O.

Legend: TTL = TTL compatible input; CMOS = CMOS compatible input or output; ST = Schmitt Trigger input with CMOS levels; Analog = Analog input; I = Input; O = Output; P = Power; OD = Open-Drain (no P diode to V_{DD}); DIG = Digital output; I^2C™ = Open-Drain, I^2C-specific

Note 1: RA7 and RA6 will be disabled if OSC1 and OSC2 are used for the clock function.

© 2011 Microchip Technology Inc.

TABLE 1-4: PIC18F4XJ50 PINOUT I/O DESCRIPTIONS (CONTINUED)

Pin Name	Pin Number		Pin Type	Buffer Type	Description
	44-QFN	44-TQFP			
					PORTA is a bidirectional I/O port.
RA0/AN0/C1INA/ULPWU/PMA6/RP0	19	19			
RA0			I/O	DIG	Digital I/O.
AN0			I	Analog	Analog Input 0.
C1INA			I	Analog	Comparator 1 Input A.
ULPWU			I	Analog	Ultra Low-Power Wake-up input.
PMA6			O	DIG	Parallel Master Port digital output.
RP0			I/O	DIG	Remappable Peripheral Pin 0 input/output.
RA1/AN1/C2INA/PMA7/RP1	20	20			
RA1			I	DIG	Digital I/O.
AN1			O	Analog	Analog Input 1.
C2INA			I	Analog	Comparator 2 Input A.
PMA7			O	DIG	Parallel Master Port digital output.
RP1			I/O	DIG	Remappable Peripheral Pin 1 input/output.
RA2/AN2/VREF-/CVREF/C2INB	21	21			
RA2			I/O	DIG	Digital I/O.
AN2			I	Analog	Analog Input 2.
VREF-			O	Analog	A/D reference voltage (low) input.
CVREF			I	Analog	Comparator reference voltage output.
C2INB			I	Analog	Comparator 2 Input B.
RA3/AN3/VREF+/C1INB	22	22			
RA3			I/O	DIG	Digital I/O.
AN3			I	Analog	Analog Input 3.
VREF+			I	Analog	A/D reference voltage (high) input.
C1INB			I	Analog	Comparator 1 Input B.
RA5/AN4/$\overline{SS1}$/HLVDIN/RCV/RP2	24	24			
RA5			I/O	DIG	Digital I/O.
AN4			I	Analog	Analog Input 4.
$\overline{SS1}$			I	TTL	SPI slave select input.
HLVDIN			I	Analog	Low-Voltage Detect (LVD) input.
RCV			I	Analog	External USB transceiver RCV input.
RP2			I/O	DIG	Remappable Peripheral Pin 2 input/output.
RA6(1)					See the OSC2/CLKO/RA6 pin.
RA7(1)					See the OSC1/CLKI/RA7 pin.

Legend: TTL = TTL compatible input; CMOS = CMOS compatible input or output; ST = Schmitt Trigger input with CMOS levels; Analog = Analog input; I = Input; O = Output; P = Power; OD = Open-Drain (no P diode to VDD); DIG = Digital output; I^2C™ = Open-Drain, I^2C-specific

Note 1: RA7 and RA6 will be disabled if OSC1 and OSC2 are used for the clock function.

TABLE 1-4: PIC18F4XJ50 PINOUT I/O DESCRIPTIONS (CONTINUED)

Pin Name	Pin Number		Pin Type	Buffer Type	Description
	44-QFN	44-TQFP			
					PORTB is a bidirectional I/O port. PORTB can be software programmed for internal weak pull-ups on all inputs.
RB0/AN12/INT0/RP3	9	8			
RB0			I/O	DIG	Digital I/O.
AN12			I	Analog	Analog Input 12.
INT0			I	ST	External Interrupt 0.
RP3			I/O	DIG	Remappable Peripheral Pin 3 input/output.
RB1/AN10/PMBE/RTCC/RP4	10	9			
RB1			I/O	DIG	Digital I/O.
AN10			I	Analog	Analog Input 10.
PMBE			O	DIG	Parallel Master Port byte enable.
RTCC			O	DIG	Real-Time Clock Calendar (RTCC) output.
RP4			I/O	DIG	Remappable Peripheral Pin 4 Input/output.
RB2/AN8/CTED1/PMA3/VMO/REFO/RP5	11	10			
RB2			I/O	DIG	Digital I/O.
AN8			I	Analog	Analog Input 8.
CTED1			I	ST	CTMU Edge 1 input.
PMA3			O	DIG	Parallel Master Port address.
VMO			O	DIG	External USB transceiver D- data output.
REFO			O	DIG	Reference output clock.
RP5			I/O	DIG	Remappable Peripheral Pin 5 input/output.
RB3/AN9/CTED2/PMA2/VPO/RP6	12	11			
RB3			I/O	DIG	Digital I/O.
AN9			I	Analog	Analog Input 9.
CTED2			I	ST	CTMU Edge 2 input.
PMA2			O	DIG	Parallel Master Port address.
VPO			O	DIG	External USB transceiver D+ data output.
RP6			I/O	DIG	Remappable Peripheral Pin 6 input/output.

Legend: TTL = TTL compatible input; CMOS = CMOS compatible input or output; ST = Schmitt Trigger input with CMOS levels; Analog = Analog input; I = Input; O = Output; P = Power; OD = Open-Drain (no P diode to V_{DD}); DIG = Digital output; I^2C™ = Open-Drain, I^2C-specific

Note 1: RA7 and RA6 will be disabled if OSC1 and OSC2 are used for the clock function.

© 2011 Microchip Technology Inc.

TABLE 1-4: PIC18F4XJ50 PINOUT I/O DESCRIPTIONS (CONTINUED)

Pin Name	Pin Number		Pin Type	Buffer Type	Description
	44-QFN	44-TQFP			
					PORTB (continued)
RB4/PMA1/KBI0/SCK1/SCL1/RP7	14	14			
RB4			I/O	DIG	Digital I/O.
PMA1			I/O	DIG	Parallel Master Port address.
KBI0			I	TTL	Interrupt-on-change pin.
SCK1			I/O	DIG	Synchronous serial clock input/output.
SCL1			I/O	I^2C	I^2C clock input/output.
RP7			I/O	DIG	Remappable Peripheral Pin 7 input/output.
RB5/PMA0/KBI1/SDI1/SDA1/RP8	15	15			
RB5			I/O	DIG	Digital I/O.
PMA0			I/O	DIG	Parallel Master Port address.
KBI1			I	TTL	Interrupt-on-change pin.
SDI1			I	ST	SPI data input.
SDA1			I/O	I^2C	I^2C™ data input/output.
RP8			I/O	DIG	Remappable Peripheral Pin 8 input/output.
RB6/KBI2/PGC/RP9	16	16			
RB6			I/O	DIG	Digital I/O.
KBI2			I	TTL	Interrupt-on-change pin.
PGC			I	ST	ICSP™ clock input.
RP9			I/O	DIG	Remappable Peripheral Pin 9 input/output.
RB7/KBI3/PGD/RP10	17	17			
RB7			I/O	DIG	Digital I/O.
KBI3			I	TTL	Interrupt-on-change pin.
PGD			I/O	ST	In-Circuit Debugger and ICSP programming data pin.
RP10			I/O	DIG	Remappable Peripheral Pin 10 input/output.

Legend: TTL = TTL compatible input; CMOS = CMOS compatible input or output; ST = Schmitt Trigger input with CMOS levels; Analog = Analog input; I = Input; O = Output; P = Power; OD = Open-Drain (no P diode to V_{DD}); DIG = Digital output; I^2C™ = Open-Drain, I^2C-specific

Note 1: RA7 and RA6 will be disabled if OSC1 and OSC2 are used for the clock function.

TABLE 1-4: PIC18F4XJ50 PINOUT I/O DESCRIPTIONS (CONTINUED)

Pin Name	Pin Number		Pin Type	Buffer Type	Description
	44-QFN	44-TQFP			
					PORTC is a bidirectional I/O port.
RC0/T1OSO/T1CKI/RP11	34	32			
RC0			I/O	ST	Digital I/O.
T1OSO			O	Analog	Timer1 oscillator output.
T1CKI			I	ST	Timer1/Timer3 external clock input.
RP11			I/O	DIG	Remappable Peripheral Pin 11 input/output.
RC1/T1OSI/$\overline{UOE}$/RP12	35	35			
RC1			I/O	ST	Digital I/O.
T1OSI			I	Analog	Timer1 oscillator input.
$\overline{UOE}$			O	DIG	External USB transceiver NOE output.
RP12			I/O	DIG	Remappable Peripheral Pin 12 input/output.
RC2/AN11/CTPLS/RP13	36	36			
RC2			I/O	ST	Digital I/O.
AN11			I	Analog	Analog Input 11.
CTPLS			O	DIG	CTMU pulse generator output.
RP13			I/O	DIG	Remappable Peripheral Pin 13 input/output.
RC4/D-/VM	42	42			
RC4			I	TTL	Digital I.
D-			O	—	USB bus minus line input/output.
VM			I	TTL	External USB transceiver FM input.
RC5/D+/VP	43	43			
RC5			I	TTL	Digital I.
D+			I/O	DIG	USB bus plus line input/output.
VP			I	TTL	External USB transceiver VP input.
RC6/PMA5/TX1/CK1/RP17	44	44			
RC6			I/O	ST	Digital I/O.
PMA5			O	DIG	Parallel Master Port address.
TX1			O	DIG	EUSART1 asynchronous transmit.
CK1			I/O	ST	EUSART1 synchronous clock (see related RX1/DT1).
RP17			I/O	DIG	Remappable Peripheral Pin 17 input/output.
RC7/PMA4/RX1/DT1/SDO1/RP18	1	1			
RC7			I/O	ST	Digital I/O.
PMA4			O	DIG	Parallel Master Port address.
RX1			I	ST	EUSART1 asynchronous receive.
DT1			I/O	ST	EUSART1 synchronous data output/input (see related TX1/CK1).
SDO1			O	DIG	SPI data output.
RP18			I/O	DIG	Remappable Peripheral Pin 18 input/output.

Legend: TTL = TTL compatible input; CMOS = CMOS compatible input or output; ST = Schmitt Trigger input with CMOS levels; Analog = Analog input; I = Input; O = Output; P = Power; OD = Open-Drain (no P diode to V_{DD}); DIG = Digital output; I^2C™ = Open-Drain, I^2C-specific

Note 1: RA7 and RA6 will be disabled if OSC1 and OSC2 are used for the clock function.

© 2011 Microchip Technology Inc.

TABLE 1-4: PIC18F4XJ50 PINOUT I/O DESCRIPTIONS (CONTINUED)

Pin Name	Pin Number		Pin Type	Buffer Type	Description
	44-QFN	44-TQFP			
					PORTD is a bidirectional I/O port.
RD0/PMD0/SCL2	38	38			
RD0			I/O	ST	Digital I/O.
PMD0			I/O	DIG	Parallel Master Port data.
SCL2			I/O	DIG	I^2C™ data input/output.
RD1/PMD1/SDA2	39	39			
RD1			I/O	ST	Digital I/O.
PMD1			I/O	DIG	Parallel Master Port data.
SDA2			I/O	DIG	I^2C data input/output.
RD2/PMD2/RP19	40	40			
RD2			I/O	ST	Digital I/O.
PMD2			I/O	DIG	Parallel Master Port data.
RP19			I/O	DIG	Remappable Peripheral Pin 19 input/output.
RD3/PMD3/RP20	41	41			
RD3			I/O	ST	Digital I/O.
PMD3			I/O	DIG	Parallel Master Port data.
RP20			I/O	DIG	Remappable Peripheral Pin 20 input/output.
RD4/PMD4/RP21	2	2			
RD4			I/O	ST	Digital I/O.
PMD4			I/O	DIG	Parallel Master Port data.
RP21			I/O	DIG	Remappable Peripheral Pin 21 input/output.
RD5/PMD5/RP22	3	3			
RD5			I/O	ST	Digital I/O.
PMD5			I/O	DIG	Parallel Master Port data.
RP22			I/O	DIG	Remappable Peripheral Pin 22 input/output.
RD6/PMD6/RP23	4	4			
RD6			I/O	ST	Digital I/O.
PMD6			I/O	DIG	Parallel Master Port data.
RP23			I/O	DIG	Remappable Peripheral Pin 23 input/output.
RD7/PMD7/RP24	5	5			
RD7			I/O	ST	Digital I/O.
PMD7			I/O	DIG	Parallel Master Port data.
RP24			I/O	DIG	Remappable Peripheral Pin 24 input/output.

Legend: TTL = TTL compatible input; CMOS = CMOS compatible input or output; ST = Schmitt Trigger input with CMOS levels; Analog = Analog input; I = Input; O = Output; P = Power; OD = Open-Drain (no P diode to V_{DD}); DIG = Digital output; I^2C™ = Open-Drain, I^2C-specific

Note 1: RA7 and RA6 will be disabled if OSC1 and OSC2 are used for the clock function.

TABLE 1-4: PIC18F4XJ50 PINOUT I/O DESCRIPTIONS (CONTINUED)

Pin Name	Pin Number		Pin Type	Buffer Type	Description
	44-QFN	44-TQFP			
					PORTE is a bidirectional I/O port.
RE0/AN5/PMRD	25	25			
RE0			I/O	ST	Digital I/O.
AN5			I	Analog	Analog Input 5.
PMRD			I/O	DIG	Parallel Master Port input/output.
RE1/AN6/PMWR	26	26			
RE1			I/O	ST	Digital I/O.
AN6			I	Analog	Analog Input 6.
PMWR			I/O	DIG	Parallel Master Port write strobe.
RE2/AN7/PMCS	27	27			
RE2			I/O	ST	Digital I/O.
AN7			I	Analog	Analog Input 7.
PMCS			O	—	Parallel Master Port chip select.
VSS1	6	6	P	—	Ground reference for logic and I/O pins.
VSS2	31	29	—	—	
AVSS1	30	—	P	—	Ground reference for analog modules.
VDD1	8	7	P	—	Positive supply for peripheral digital logic and I/O pins.
VDD2	29	28	P	—	
VDDCORE/VCAP	23	23			Core logic power or external filter capacitor connection.
VDDCORE			P	—	Positive supply for microcontroller core logic (regulator disabled).
VCAP			P	—	External filter capacitor connection (regulator enabled).
AVDD1	7	—	P	—	Positive supply for analog modules.
AVDD2	28	—	—	—	Positive supply for analog modules.
VUSB	37	37	P	—	USB voltage input pin.

Legend: TTL = TTL compatible input; CMOS = CMOS compatible input or output; ST = Schmitt Trigger input with CMOS levels; Analog = Analog input; I = Input; O = Output; P = Power; OD = Open-Drain (no P diode to VDD); DIG = Digital output; I^2C™ = Open-Drain, I^2C-specific

Note 1: RA7 and RA6 will be disabled if OSC1 and OSC2 are used for the clock function.

© 2011 Microchip Technology Inc.

2.0 GUIDELINES FOR GETTING STARTED WITH PIC18FJ MICROCONTROLLERS

2.1 Basic Connection Requirements

Getting started with the PIC18F46J50 family family of 8-bit microcontrollers requires attention to a minimal set of device pin connections before proceeding with development.

The following pins must always be connected:

- All VDD and VSS pins
  (see **Section 2.2 "Power Supply Pins"**)
- All AVDD and AVSS pins (if present), regardless of whether or not the analog device features are used
  (see **Section 2.2 "Power Supply Pins"**)
- $\overline{\text{MCLR}}$ pin
  (see **Section 2.3 "Master Clear (MCLR) Pin"**)
- VCAP/VDDCORE pin
  (see **Section 2.4 "Voltage Regulator Pins (VCAP/VDDCORE)"**)

These pins must also be connected if they are being used in the end application:

- PGC/PGD pins used for In-Circuit Serial Programming™ (ICSP™) and debugging purposes
  (see **Section 2.5 "ICSP Pins"**)
- OSCI and OSCO pins when an external oscillator source is used
  (see **Section 2.6 "External Oscillator Pins"**)

Additionally, the following pins may be required:

- VREF+/VREF- pins are used when external voltage reference for analog modules is implemented

Note:	The AVDD and AVSS pins must always be connected, regardless of whether any of the analog modules are being used.

The minimum mandatory connections are shown in Figure 2-1.

FIGURE 2-1: RECOMMENDED MINIMUM CONNECTIONS

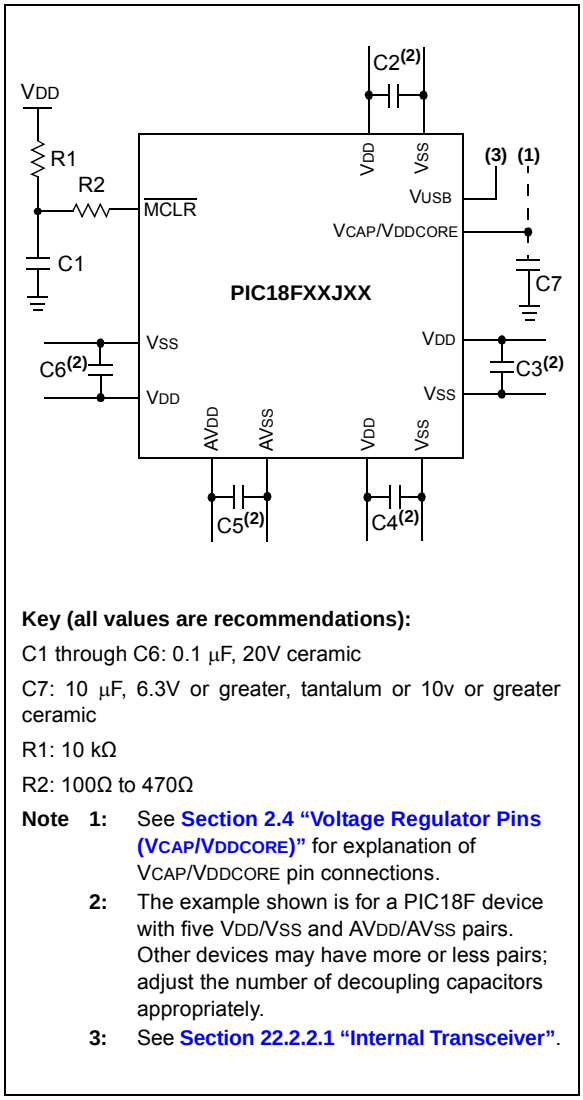

Key (all values are recommendations):

C1 through C6: 0.1 µF, 20V ceramic

C7: 10 µF, 6.3V or greater, tantalum or 10v or greater ceramic

R1: 10 kΩ

R2: 100Ω to 470Ω

Note 1: See **Section 2.4 "Voltage Regulator Pins (VCAP/VDDCORE)"** for explanation of VCAP/VDDCORE pin connections.

2: The example shown is for a PIC18F device with five VDD/VSS and AVDD/AVSS pairs. Other devices may have more or less pairs; adjust the number of decoupling capacitors appropriately.

3: See **Section 22.2.2.1 "Internal Transceiver"**.

2.2 Power Supply Pins

2.2.1 DECOUPLING CAPACITORS

The use of decoupling capacitors on every pair of power supply pins, such as VDD, VSS, AVDD and AVSS, is required.

Consider the following criteria when using decoupling capacitors:

- **Value and type of capacitor:** A 0.1 μF (100 nF), 10-20V capacitor is recommended. The capacitor should be a low-ESR device, with a resonance frequency in the range of 200 MHz and higher. Ceramic capacitors are recommended.
- **Placement on the printed circuit board:** The decoupling capacitors should be placed as close to the pins as possible. It is recommended to place the capacitors on the same side of the board as the device. If space is constricted, the capacitor can be placed on another layer on the PCB using a via; however, ensure that the trace length from the pin to the capacitor is no greater than 0.25 inch (6 mm).
- **Handling high-frequency noise:** If the board is experiencing high-frequency noise (upward of tens of MHz), add a second ceramic type capacitor in parallel to the above described decoupling capacitor. The value of the second capacitor can be in the range of 0.01 μF to 0.001 μF. Place this second capacitor next to each primary decoupling capacitor. In high-speed circuit designs, consider implementing a decade pair of capacitances as close to the power and ground pins as possible (e.g., 0.1 μF in parallel with 0.001 μF).
- **Maximizing performance:** On the board layout from the power supply circuit, run the power and return traces to the decoupling capacitors first, and then to the device pins. This ensures that the decoupling capacitors are first in the power chain. Equally important is to keep the trace length between the capacitor and the power pins to a minimum, thereby reducing PCB trace inductance.

2.2.2 BULK CAPACITORS

On boards with power traces running longer than six inches in length, it is suggested to use a larger energy storing capacitor for integrated circuits, including microcontrollers, to supply a local power source. The value of this capacitor should be determined based on the trace resistance that connects the power supply source to the device, and the maximum current drawn by the device in the application. In other words, select the capacitor so that it meets the acceptable voltage sag at the device. Typical values range from 4.7 μF to 47 μF.

2.3 Master Clear ($\overline{\text{MCLR}}$) Pin

The $\overline{\text{MCLR}}$ pin provides two specific device functions: Device Reset, and Device Programming and Debugging. If programming and debugging are not required in the end application, a direct connection to VDD may be all that is required. The addition of other components, to help increase the application's resistance to spurious Resets from voltage sags, may be beneficial. A typical configuration is shown in Figure 2-1. Other circuit designs may be implemented, depending on the application's requirements.

During programming and debugging, the resistance and capacitance that can be added to the pin must be considered. Device programmers and debuggers drive the $\overline{\text{MCLR}}$ pin. Consequently, specific voltage levels (VIH and VIL) and fast signal transitions must not be adversely affected. Therefore, specific values of R1 and C1 will need to be adjusted based on the application and PCB requirements. For example, it is recommended that the capacitor, C1, be isolated from the $\overline{\text{MCLR}}$ pin during programming and debugging operations by using a jumper (Figure 2-2). The jumper is replaced for normal run-time operations.

Any components associated with the $\overline{\text{MCLR}}$ pin should be placed within 0.25 inch (6 mm) of the pin.

FIGURE 2-2: EXAMPLE OF $\overline{\text{MCLR}}$ PIN CONNECTIONS

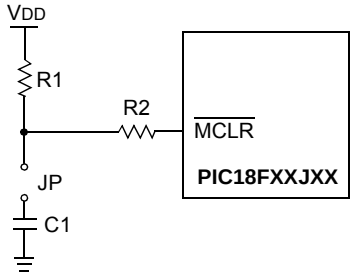

Note 1: R1 ≤ 10 kΩ is recommended. A suggested starting value is 10 kΩ. Ensure that the $\overline{\text{MCLR}}$ pin VIH and VIL specifications are met.

2: R2 ≤ 470Ω will limit any current flowing into $\overline{\text{MCLR}}$ from the external capacitor, C, in the event of $\overline{\text{MCLR}}$ pin breakdown, due to Electrostatic Discharge (ESD) or Electrical Overstress (EOS). Ensure that the $\overline{\text{MCLR}}$ pin VIH and VIL specifications are met.

© 2011 Microchip Technology Inc.

2.4 Voltage Regulator Pins (VCAP/VDDCORE)

On “F” devices, a low-ESR (< 5Ω) capacitor is required on the VCAP/VDDCORE pin to stabilize the voltage regulator output voltage. The VCAP/VDDCORE pin must not be connected to VDD or any other voltage source on an “F” device. The VCAP/VDDCORE pin should only be connected to a 10 µF capacitor to ground. The type can be ceramic or tantalum. Suitable example capacitors are provided in Table 2-1.

Designers may use Figure 2-3 to evaluate ESR equivalence of candidate devices. It is recommended that the trace length not exceed 0.25 inch (6 mm). Refer to **Section 30.0 “Electrical Characteristics”** for additional information.

On “LF” devices, the internal core voltage regulator is disabled. On these devices, the VCAP/VDDCORE pin must be externally connected to a suitable VDDCORE level voltage source at the circuit board level. Refer to **Section 30.0 “Electrical Characteristics”** for the allowed VDDCORE voltage range. Good power supply bypassing practices should be used for the supply source providing the VCAP/VDDCORE voltage.

It is recommended to use a 0.1 µF ceramic capacitor between VCAP/VDDCORE and ground, placed as close to the VCAP/VDDCORE and VSS pins as possible.

FIGURE 2-3: FREQUENCY vs. ESR PERFORMANCE FOR SUGGESTED VCAP

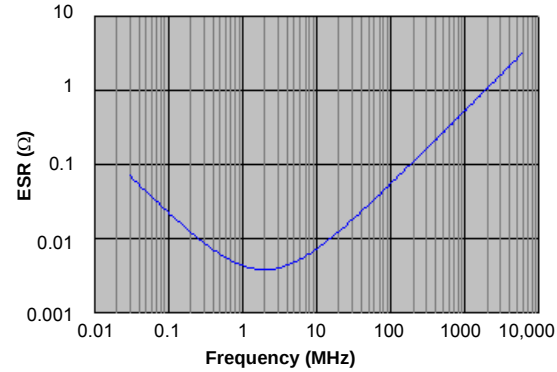

Note: Typical data measurement at 25°C, 0V DC bias.

TABLE 2-1: SUITABLE CAPACITOR EQUIVALENTS

Make	Part #	Nominal Capacitance	Base Tolerance	Rated Voltage	Temp. Range
TDK	C3216X7R1C106K	10 µF	±10%	16V	-55 to +125ºC
TDK	C3216X5R1C106K	10 µF	±10%	16V	-55 to +85ºC
Panasonic	ECJ-3YX1C106K	10 µF	±10%	16V	-55 to +125ºC
Panasonic	ECJ-4YB1C106K	10 µF	±10%	16V	-55 to +85ºC
Murata	GRM32DR71C106KA01L	10 µF	±10%	16V	-55 to +125ºC
Murata	GRM31CR61C106KC31L	10 µF	±10%	16V	-55 to +85ºC

2.4.1 CONSIDERATIONS FOR CERAMIC CAPACITORS

In recent years, large value, low-voltage, surface-mount ceramic capacitors have become very cost effective in sizes up to a few tens of microfarad. The low-ESR, small physical size and other properties make ceramic capacitors very attractive in many types of applications.

Ceramic capacitors are suitable for use with the VDDCORE voltage regulator of this microcontroller. However, some care is needed in selecting the capacitor to ensure that it maintains sufficient capacitance over the intended operating range of the application.

Typical low-cost, 10 µF ceramic capacitors are available in X5R, X7R and Y5V dielectric ratings (other types are also available, but are less common). The initial tolerance specifications for these types of capacitors are often specified as ±10% to ±20% (X5R and X7R), or -20%/+80% (Y5V). However, the effective capacitance that these capacitors provide in an application circuit will also vary based on additional factors, such as the applied DC bias voltage and the temperature. The total in-circuit tolerance is, therefore, much wider than the initial tolerance specification.

The X5R and X7R capacitors typically exhibit satisfactory temperature stability (ex: ±15% over a wide temperature range, but consult the manufacturer's data sheets for exact specifications). However, Y5V capacitors typically have extreme temperature tolerance specifications of +22%/-82%. Due to the extreme temperature tolerance, a 10 µF nominal rated Y5V type capacitor may not deliver enough total capacitance to meet minimum VDDCORE voltage regulator stability and transient response requirements. Therefore, Y5V capacitors are not recommended for use with the VDDCORE regulator if the application must operate over a wide temperature range.

In addition to temperature tolerance, the effective capacitance of large value ceramic capacitors can vary substantially, based on the amount of DC voltage applied to the capacitor. This effect can be very significant, but is often overlooked or is not always documented.

A typical DC bias voltage vs. capacitance graph for X7R type and Y5V type capacitors is shown in Figure 2-4.

FIGURE 2-4: DC BIAS VOLTAGE vs. CAPACITANCE CHARACTERISTICS

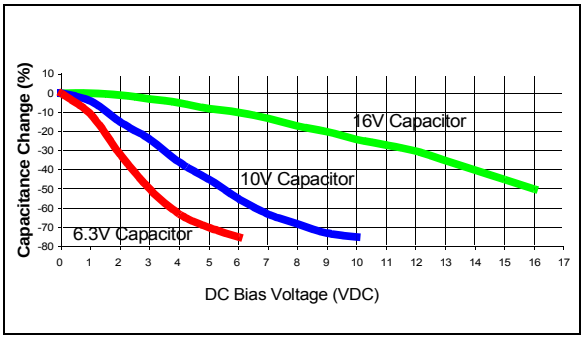

When selecting a ceramic capacitor to be used with the VDDCORE voltage regulator, it is suggested to select a high-voltage rating, so that the operating voltage is a small percentage of the maximum rated capacitor voltage. For example, choose a ceramic capacitor rated at 16V for the 2.5V VDDCORE voltage. Suggested capacitors are shown in Table 2-1.

2.5 ICSP Pins

The PGC and PGD pins are used for In-Circuit Serial Programming™ (ICSP™) and debugging purposes. It is recommended to keep the trace length between the ICSP connector and the ICSP pins on the device as short as possible. If the ICSP connector is expected to experience an ESD event, a series resistor is recommended, with the value in the range of a few tens of ohms, not to exceed 100Ω.

Pull-up resistors, series diodes, and capacitors on the PGC and PGD pins are not recommended as they will interfere with the programmer/debugger communications to the device. If such discrete components are an application requirement, they should be removed from the circuit during programming and debugging. Alternatively, refer to the AC/DC characteristics and timing requirements information in the respective device Flash programming specification for information on capacitive loading limits, and pin input voltage high (VIH) and input low (VIL) requirements.

For device emulation, ensure that the "Communication Channel Select" (i.e., PGCx/PGDx pins), programmed into the device, matches the physical connections for the ICSP to the Microchip debugger/emulator tool.

For more information on available Microchip development tools connection requirements, refer to **Section 29.0 "Development Support"**.

© 2011 Microchip Technology Inc.

2.6 External Oscillator Pins

Many microcontrollers have options for at least two oscillators: a high-frequency primary oscillator and a low-frequency secondary oscillator (refer to **Section 3.0 "Oscillator Configurations"** for details).

The oscillator circuit should be placed on the same side of the board as the device. Place the oscillator circuit close to the respective oscillator pins with no more than 0.5 inch (12 mm) between the circuit components and the pins. The load capacitors should be placed next to the oscillator itself, on the same side of the board.

Use a grounded copper pour around the oscillator circuit to isolate it from surrounding circuits. The grounded copper pour should be routed directly to the MCU ground. Do not run any signal traces or power traces inside the ground pour. Also, if using a two-sided board, avoid any traces on the other side of the board where the crystal is placed.

Layout suggestions are shown in Figure 2-5. In-line packages may be handled with a single-sided layout that completely encompasses the oscillator pins. With fine-pitch packages, it is not always possible to completely surround the pins and components. A suitable solution is to tie the broken guard sections to a mirrored ground layer. In all cases, the guard trace(s) must be returned to ground.

In planning the application's routing and I/O assignments, ensure that adjacent port pins, and other signals in close proximity to the oscillator, are benign (i.e., free of high frequencies, short rise and fall times, and other similar noise).

For additional information and design guidance on oscillator circuits, please refer to these Microchip Application Notes, available at the corporate web site (www.microchip.com):

- *AN826, "Crystal Oscillator Basics and Crystal Selection for rfPIC™ and PICmicro® Devices"*
- *AN849, "Basic PICmicro® Oscillator Design"*
- *AN943, "Practical PICmicro® Oscillator Analysis and Design"*
- *AN949, "Making Your Oscillator Work"*

2.7 Unused I/Os

Unused I/O pins should be configured as outputs and driven to a logic low state. Alternatively, connect a 1 kΩ to 10 kΩ resistor to VSS on unused pins and drive the output to logic low.

FIGURE 2-5: SUGGESTED PLACEMENT OF THE OSCILLATOR CIRCUIT

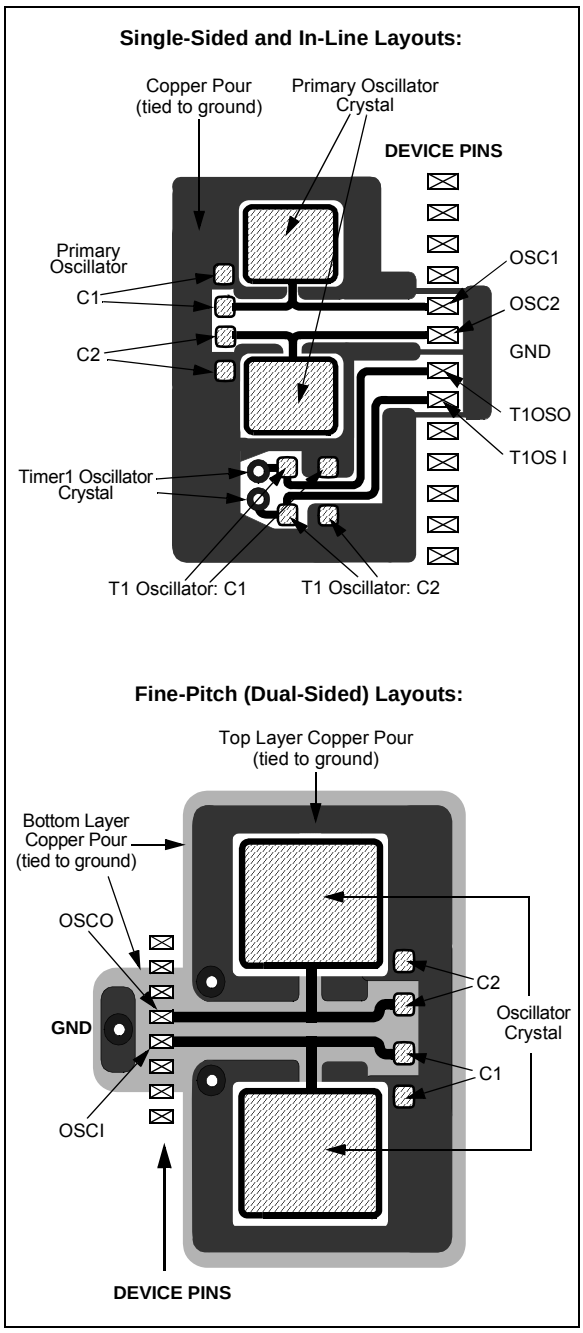

NOTES:

© 2011 Microchip Technology Inc.

3.0 OSCILLATOR CONFIGURATIONS

3.1 Overview

Devices in the PIC18F46J50 family incorporate a different oscillator and microcontroller clock system than general purpose PIC18F devices. Besides the USB module, with its unique requirements for a stable clock source, make it necessary to provide a separate clock source that is compliant with both USB low-speed and full-speed specifications.

The PIC18F46J50 family has additional prescalers and postscalers, which have been added to accommodate a wide range of oscillator frequencies. Figure 3-1 provides an overview of the oscillator structure.

Other oscillator features used in PIC18 enhanced microcontrollers, such as the internal oscillator block and clock switching, remain the same. They are discussed later in this chapter.

3.1.1 OSCILLATOR CONTROL

The operation of the oscillator in PIC18F46J50 family devices is controlled through three Configuration registers and two control registers. Configuration registers, CONFIG1L, CONFIG1H and CONFIG2L, select the oscillator mode, PLL prescaler and CPU divider options. As Configuration bits, these are set when the device is programmed and left in that configuration until the device is reprogrammed.

The OSCCON register (Register 3-2) selects the Active Clock mode; it is primarily used in controlling clock switching in power-managed modes. Its use is discussed in **Section 3.5.1 "Oscillator Control Register"**.

The OSCTUNE register (Register 3-1) is used to trim the INTOSC frequency source, and select the low-frequency clock source that drives several special features. The OSCTUNE register is also used to activate or disable the Phase Locked Loop (PLL). Its use is described in **Section 3.2.5.1 "OSCTUNE Register"**.

3.2 Oscillator Types

PIC18F46J50 family devices can be operated in eight distinct oscillator modes. Users can program the FOSC<2:0> Configuration bits to select one of the modes listed in Table 3-1. For oscillator modes which produce a clock output (CLKO) on pin RA6, the output frequency will be one fourth of the peripheral clock frequency. The clock output stops when in Sleep mode, but will continue during Idle mode (see Figure 3-1).

TABLE 3-1: OSCILLATOR MODES

Mode	Description
ECPLL	External Clock Input mode, the PLL can be enabled or disabled in software, CLKO on RA6, apply external clock signal to RA7.
EC	External Clock Input mode, the PLL is always disabled, CLKO on RA6, apply external clock signal to RA7.
HSPLL	High-Speed Crystal/Resonator mode, PLL can be enabled or disabled in software, crystal/resonator connected between RA6 and RA7.
HS	High-Speed Crystal/Resonator mode, PLL always disabled, crystal/resonator connected between RA6 and RA7.
INTOSCPLLO	Internal Oscillator mode, PLL can be enabled or disabled in software, CLKO on RA6, port function on RA7, the internal oscillator block is used to derive both the primary clock source and the postscaled internal clock.
INTOSCPLL	Internal Oscillator mode, PLL can be enabled or disabled in software, port function on RA6 and RA7, the internal oscillator block is used to derive both the primary clock source and the postscaled internal clock.
INTOSCO	Internal Oscillator mode, PLL is always disabled, CLKO on RA6, port function on RA7, the output of the INTOSC postscaler serves as both the postscaled internal clock and the primary clock source.
INTOSC	Internal Oscillator mode, PLL is always disabled, port function on RA6 and RA7, the output of the INTOSC postscaler serves as both the postscaled internal clock and the primary clock source.

3.2.1 OSCILLATOR MODES AND USB OPERATION

Because of the unique requirements of the USB module, a different approach to clock operation is necessary. In order to use the USB module, a fixed 6 MHz or 48 MHz clock must be internally provided to the USB module for operation in either Low-Speed or Full-Speed mode, respectively. The microcontroller core need not be clocked at the same frequency as the USB module.

A network of MUXes, clock dividers and a fixed 96 MHz output PLL have been provided, which can be used to derive various microcontroller core and USB module frequencies. Figure 3-1 helps in understanding the oscillator structure of the PIC18F46J50 family of devices.

FIGURE 3-1: PIC18F46J50 FAMILY CLOCK DIAGRAM

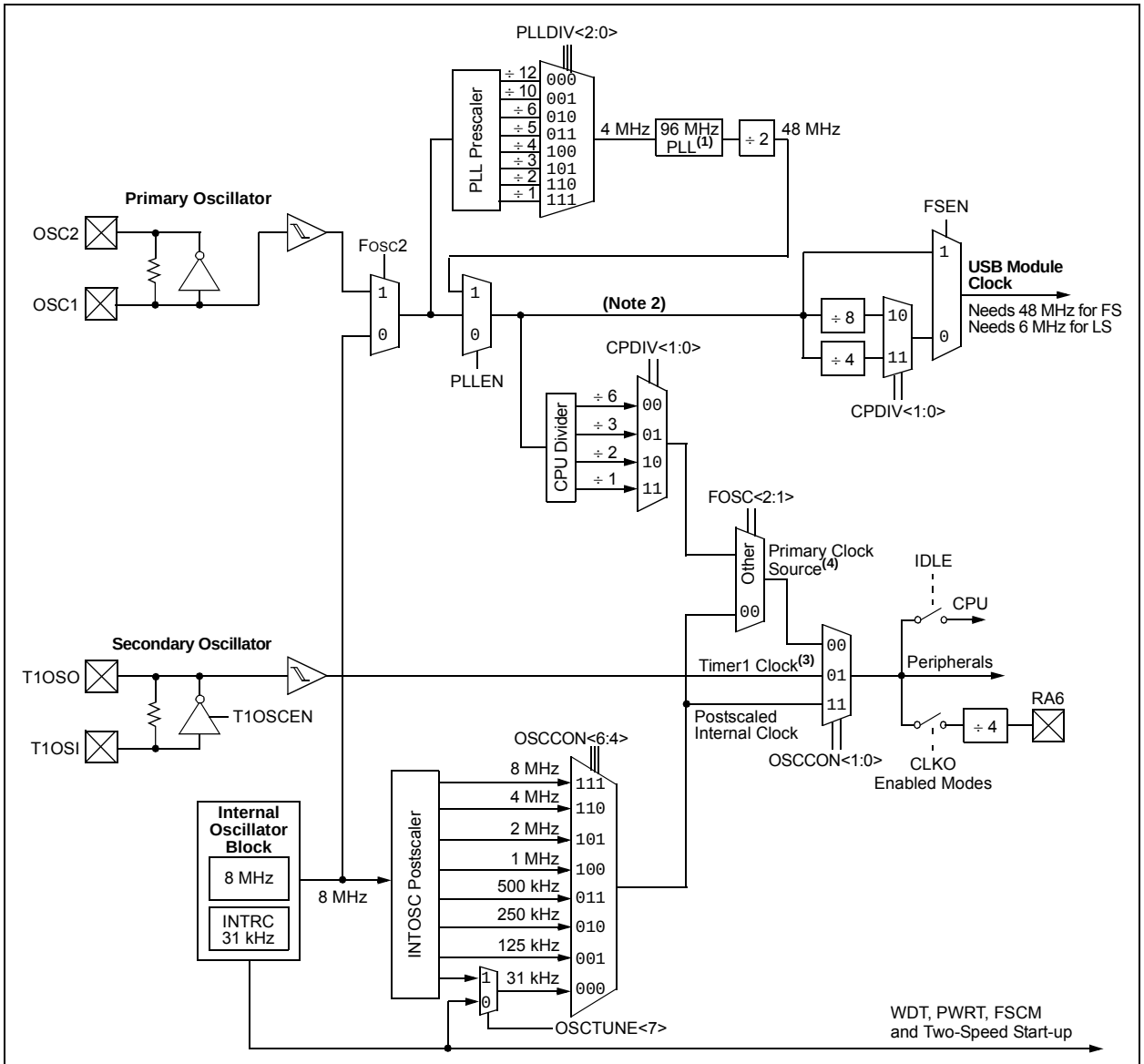

Note 1: The PLL requires a 4 MHz input and it produces a 96 MHz output. The PLL will not be available until the PLLEN bit in the OSCTUNE register is set. Once the PLLEN bit is set, the PLL requires up to t_{rc} to lock. During this time, the device continues to be clocked at the PLL bypassed frequency.

2: In order to use the USB module in Full-Speed mode, this node must be run at 48 MHz. For Low-Speed mode, this node may be run at either 48 MHz or 24 MHz, but the CPDIV bits must be set such that the USB module is clocked at 6 MHz.

3: Selecting the Timer1 clock or postscaled internal clock will turn off the primary oscillator (unless required by the reference clock described in **Section 3.6 "Reference Clock Output"**) and the PLL.

4: The USB module cannot be used to communicate unless the primary clock source is selected.

© 2011 Microchip Technology Inc.

3.2.2 CRYSTAL OSCILLATOR/CERAMIC RESONATORS

In HS and HSPLL Oscillator modes, a crystal or ceramic resonator is connected to the OSC1 and OSC2 pins to establish oscillation. Figure 3-2 displays the pin connections.

The oscillator design requires the use of a parallel resonant crystal.

Note:	Use of a series resonant crystal may give a frequency out of the crystal manufacturer's specifications.

FIGURE 3-2: CRYSTAL/CERAMIC RESONATOR OPERATION (HS OR HSPLL CONFIGURATION)

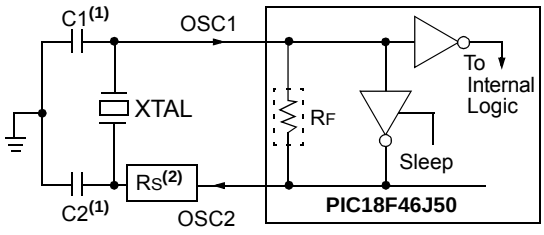

Note 1: See Table 3-2 and Table 3-3 for initial values of C1 and C2.

2: A series resistor (RS) may be required to avoid overdriving crystals with low drive level specification.

TABLE 3-2: CAPACITOR SELECTION FOR CERAMIC RESONATORS

Typical Capacitor Values Used:			
Mode	**Freq**	**OSC1**	**OSC2**
HS	8.0 MHz 16.0 MHz	27 pF 22 pF	27 pF 22 pF
Capacitor values are for design guidance only. These capacitors were tested with the resonators listed below for basic start-up and operation. **These values are not optimized**. Different capacitor values may be required to produce acceptable oscillator operation. The user should test the performance of the oscillator over the expected VDD and temperature range for the application. See the notes following Table 3-3 for additional information.			
Resonators Used:			
4.0 MHz			
8.0 MHz			
16.0 MHz			

TABLE 3-3: CAPACITOR SELECTION FOR CRYSTAL OSCILLATOR

Osc Type	Crystal Freq	Typical Capacitor Values Tested:	
		C1	**C2**
HS	4 MHz	27 pF	27 pF
	8 MHz	22 pF	22 pF
	16 MHz	18 pF	18 pF
Capacitor values are for design guidance only. These capacitors were tested with the crystals listed below for basic start-up and operation. **These values are not optimized.** Different capacitor values may be required to produce acceptable oscillator operation. The user should test the performance of the oscillator over the expected VDD and temperature range for the application. See the notes following this table for additional information.			
Crystals Used:			
4 MHz			
8 MHz			
16 MHz			

Note 1:	Higher capacitance not only increases the stability of the oscillator, but also increases the start-up time.
2:	Since each resonator/crystal has its own characteristics, the user should consult the resonator/crystal manufacturer for appropriate values of external components.
3:	Rs may be required to avoid overdriving crystals with a low drive level specification.
4:	Always verify oscillator performance over the VDD and temperature range that is expected for the application.

An internal postscaler allows users to select a clock frequency other than that of the crystal or resonator. Frequency division is determined by the CPDIV Configuration bits. Users may select a clock frequency of the oscillator frequency, or 1/2, 1/3 or 1/6 of the frequency.

3.2.3 EXTERNAL CLOCK INPUT

The EC and ECPLL Oscillator modes require an external clock source to be connected to the OSC1 pin. There is no oscillator start-up time required after a Power-on Reset (POR) or after an exit from Sleep mode.

In the EC Oscillator mode, the oscillator frequency divided by 4 is available on the OSC2 pin. In the ECPLL Oscillator mode, the PLL output divided by 4 is available on the OSC2 pin This signal may be used for test purposes or to synchronize other logic. Figure 3-3 displays the pin connections for the EC Oscillator mode.

FIGURE 3-3: EXTERNAL CLOCK INPUT OPERATION (EC AND ECPLL CONFIGURATION)

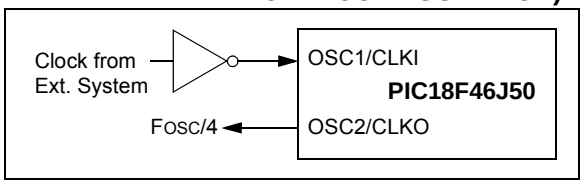

3.2.4 PLL FREQUENCY MULTIPLIER

PIC18F46J50 family devices include a PLL circuit. This is provided specifically for USB applications with lower speed oscillators and can also be used as a microcontroller clock source.

The PLL can be enabled in HSPLL, ECPLL, INTOSCPLL and INTOSCPLLO Oscillator modes by setting the PLLEN bit (OSCTUNE<6>). It is designed to produce a fixed 96 MHz reference clock from a fixed 4 MHz input. The output can then be divided and used for both the USB and the microcontroller core clock. Because the PLL has a fixed frequency input and output, there are eight prescaling options to match the oscillator input frequency to the PLL. This prescaler allows the PLL to be used with crystals, resonators and external clocks, which are integer multiple frequencies of 4 MHz. For example, a 12 MHz crystal could be used in a Prescaler Divide-by-Three mode to drive the PLL.

There is also a CPU divider, which can be used to derive the microcontroller clock from the PLL. This allows the USB peripheral and microcontroller to use the same oscillator input and still operate at different clock speeds. The CPU divider can reduce the incoming frequency by a factor of 1, 2, 3 or 6.

3.2.5 INTERNAL OSCILLATOR BLOCK

The PIC18F46J50 family devices include an internal oscillator block which generates two different clock signals; either can be used as the microcontroller's clock source. The internal oscillator may eliminate the need for external oscillator circuits on the OSC1 and/or OSC2 pins.

The main output (INTOSC) is an 8 MHz clock source which can be used to directly drive the device clock. It also drives the INTOSC postscaler which can provide a range of clock frequencies from 31 kHz to 8 MHz. Additionally, the INTOSC may be used in conjunction with the PLL to generate clock frequencies up to 48 MHz.

The other clock source is the internal RC oscillator (INTRC) which provides a nominal 31 kHz output. INTRC is enabled if it is selected as the device clock source. It is also enabled automatically when any of the following are enabled:

- Power-up Timer
- Fail-Safe Clock Monitor
- Watchdog Timer
- Two-Speed Start-up

These features are discussed in larger detail in **Section 27.0 "Special Features of the CPU"**.

The clock source frequency (INTOSC direct, INTRC direct or INTOSC postscaler) is selected by configuring the IRCF bits of the OSCCON register (Page 43).

© 2011 Microchip Technology Inc.

3.2.5.1 OSCTUNE Register

The internal oscillator's output has been calibrated at the factory but can be adjusted in the user's application. This is done by writing to the OSCTUNE register (Register 3-1). The tuning sensitivity is constant throughout the tuning range.

When the OSCTUNE register is modified, the INTOSC frequency will begin shifting to the new frequency. Code execution continues during this shift. There is no indication that the shift has occurred.

The OSCTUNE register also contains the INTSRC bit. The INTSRC bit allows users to select which internal oscillator provides the clock source when the 31 kHz frequency option is selected. This is covered in larger detail in **Section 3.5.1 "Oscillator Control Register"**.

The PLLEN bit, contained in the OSCTUNE register, can be used to enable or disable the internal 96 MHz PLL when running in one of the PLL type oscillator modes (e.g., INTOSCPLL). Oscillator modes that do not contain "PLL" in their name cannot be used with the PLL. In these modes, the PLL is always disabled regardless of the setting of the PLLEN bit.

When configured for one of the PLL enabled modes, setting the PLLEN bit does not immediately switch the device clock to the PLL output. The PLL requires up to electrical parameter, $t_{rc,}$ to start-up and lock, during which time, the device continues to be clocked. Once the PLL output is ready, the microcontroller core will automatically switch to the PLL derived frequency.

3.2.5.2 Internal Oscillator Output Frequency and Drift

The internal oscillator block is calibrated at the factory to produce an INTOSC output frequency of 8.0 MHz. However, this frequency may drift as V_{DD} or temperature changes, which can affect the controller operation in a variety of ways.

The low-frequency INTRC oscillator operates independently of the INTOSC source. Any changes in INTOSC across voltage and temperature are not necessarily reflected by changes in INTRC and vice versa.

3.2.5.3 Compensating for INTOSC Drift

It is possible to adjust the INTOSC frequency by modifying the value in the OSCTUNE register. This has no effect on the INTRC clock source frequency.

Tuning the INTOSC source requires knowing when to make the adjustment, in which direction it should be made and in some cases, how large a change is needed. When using the EUSART, for example, an adjustment may be required when it begins to generate framing errors or receives data with errors while in Asynchronous mode. Framing errors indicate that the device clock frequency is too high; to adjust for this, decrement the value in OSCTUNE to reduce the clock frequency. On the other hand, errors in data may suggest that the clock speed is too low; to compensate, increment OSCTUNE to increase the clock frequency.

It is also possible to verify device clock speed against a reference clock. Two timers may be used: one timer is clocked by the peripheral clock, while the other is clocked by a fixed reference source, such as the Timer1 oscillator. Both timers are cleared, but the timer clocked by the reference generates interrupts. When an interrupt occurs, the internally clocked timer is read and both timers are cleared. If the internally clocked timer value is greater than expected, then the internal oscillator block is running too fast. To adjust for this, decrement the OSCTUNE register.

Finally, an ECCP module can use free-running Timer1 (or Timer3), clocked by the internal oscillator block and an external event with a known period (i.e., AC power frequency). The time of the first event is captured in the CCPRxH:CCPRxL registers and is recorded for use later. When the second event causes a capture, the time of the first event is subtracted from the time of the second event. Since the period of the external event is known, the time difference between events can be calculated.

If the measured time is greater than the calculated time, the internal oscillator block is running too fast; to compensate, decrement the OSCTUNE register. If the measured time is less than the calculated time, the internal oscillator block is running too slow; to compensate, increment the OSCTUNE register.

REGISTER 3-1: OSCTUNE: OSCILLATOR TUNING REGISTER (ACCESS F9Bh)

R/W-0	R/W-0	R/W-0	R/W-0	R/W-0	R/W-0	R/W-0	R/W-0
INTSRC	PLLEN	TUN5	TUN4	TUN3	TUN2	TUN1	TUN0
bit 7							bit 0

Legend:			
R = Readable bit	W = Writable bit	U = Unimplemented bit, read as '0'	
-n = Value at POR	'1' = Bit is set	'0' = Bit is cleared	x = Bit is unknown

bit 7 **INTSRC:** Internal Oscillator Low-Frequency Source Select bit
1 = 31.25 kHz device clock derived from 8 MHz INTOSC source (divide-by-256 enabled)
0 = 31 kHz device clock derived directly from INTRC internal oscillator

bit 6 **PLLEN:** Frequency Multiplier Enable bit
1 = 96 MHz PLL is enabled
0 = 96 MHz PLL is disabled

bit 5-0 **TUN<5:0>:** Frequency Tuning bits
011111 = Maximum frequency
011110
•
•
•
000001
000000 = Center frequency; oscillator module is running at the calibrated frequency
111111
•
•
•
100000 = Minimum frequency

3.3 Oscillator Settings for USB

When the PIC18F46J50 family devices are used for USB connectivity, a 6 MHz or 48 MHz clock must be provided to the USB module for operation in either Low-Speed or Full-Speed modes, respectively. This may require some forethought in selecting an oscillator frequency and programming the device.

The full range of possible oscillator configurations compatible with USB operation is shown in Table 3-5.

3.3.1 LOW-SPEED OPERATION

The USB clock for Low-Speed mode is derived from the primary oscillator or from the 96 MHz PLL. In order to operate the USB module in Low-Speed mode, a 6 MHz clock must be provided to the USB module. Due to the way the clock dividers have been implemented in the PIC18F46J50 family, the microcontroller core must run at 24 MHz in order for the USB module to get the 6 MHz clock needed for low-speed USB operation. Several clocking schemes could be used to meet these two required conditions. See Table 3-4 and Table 3-5 for possible combinations which can be used for low-speed USB operation.

TABLE 3-4: CLOCK FOR LOW-SPEED USB

Clock Input	CPU Clock	CPDIV<1:0>	USB Clock
48	24	'10'	48/8 = 6 MHz
24	24	'11'	24/4 = 6 MHz

© 2011 Microchip Technology Inc.

TABLE 3-5: OSCILLATOR CONFIGURATION OPTIONS FOR USB OPERATION

Input Oscillator Frequency	PLL Division (PLLDIV<2:0>)	Clock Mode (FOSC<2:0>)	MCU Clock Division (CPDIV<1:0>)	Microcontroller Clock Frequency
48 MHz	N/A	EC	None (11)	48 MHz
			÷2 (10)	**24 MHz**
			÷3 (01)	16 MHz
			÷6 (00)	8 MHz
48 MHz	÷12 (000)	ECPLL	None (11)	48 MHz
			÷2 (10)	**24 MHz**
			÷3 (01)	16 MHz
			÷6 (00)	8 MHz
40 MHz	÷10 (001)	ECPLL	None (11)	48 MHz
			÷2 (10)	**24 MHz**
			÷3 (01)	16 MHz
			÷6 (00)	8 MHz
24 MHz	÷6 (010)	ECPLL	None (11)	48 MHz
			÷2 (10)	**24 MHz**
			÷3 (01)	16 MHz
			÷6 (00)	8 MHz
24 MHz	N/A	EC	None (11)	**24 MHz**
			÷2 (10)	12 MHz
			÷3 (01)	8 MHz
			÷6 (00)	4 MHz
20 MHz	÷5 (011)	ECPLL	None (11)	48 MHz
			÷2 (10)	**24 MHz**
			÷3 (01)	16 MHz
			÷6 (00)	8 MHz
16 MHz	÷4 (100)	HSPLL, ECPLL	None (11)	48 MHz
			÷2 (10)	**24 MHz**
			÷3 (01)	16 MHz
			÷6 (00)	8 MHz
12 MHz	÷3 (101)	HSPLL, ECPLL	None (11)	48 MHz
			÷2 (10)	**24 MHz**
			÷3 (01)	16 MHz
			÷6 (00)	8 MHz
8 MHz	÷2 (110)	HSPLL, ECPLL, INTOSCPLL/ INTOSCPLLO	None (11)	48 MHz
			÷2 (10)	**24 MHz**
			÷3 (01)	16 MHz
			÷6 (00)	8 MHz
4 MHz	÷1 (111)	HSPLL, ECPLL	None (11)	48 MHz
			÷2 (10)	**24 MHz**
			÷3 (01)	16 MHz
			÷6 (00)	8 MHz

Legend: All clock frequencies, except 24 MHz, are exclusively associated with full-speed USB operation (USB clock of 48 MHz). **Bold** text highlights the clock selections that are compatible with low-speed USB operation (system clock of 24 MHz, USB clock of 6 MHz).

3.4 USB From INTOSC

The 8 MHz INTOSC included in all PIC18F46J50 family devices is extremely accurate. When the 8 MHz INTOSC is used with the 96 MHz PLL, it may be used to derive the USB module clock. The high accuracy of the INTOSC will allow the application to meet low-speed USB signal rate specifications.

3.5 Clock Sources and Oscillator Switching

Like previous PIC18 enhanced devices, the PIC18F46J50 family includes a feature that allows the device clock source to be switched from the main oscillator to an alternate, low-frequency clock source. PIC18F46J50 family devices offer two alternate clock sources. When an alternate clock source is enabled, the various power-managed operating modes are available.

Essentially, there are three clock sources for these devices:

- Primary Oscillators
- Secondary Oscillators
- Internal Oscillator Block

The **Primary Oscillators** include the External Crystal and Resonator modes, the External Clock modes and the internal oscillator block. The particular mode is defined by the FOSC<2:0> Configuration bits. The details of these modes are covered earlier in this chapter.

The **Secondary Oscillators** are external sources that are not connected to the OSC1 or OSC2 pins. These sources may continue to operate even after the controller is placed in a power-managed mode.

PIC18F46J50 family devices offer the Timer1 oscillator as a secondary oscillator. This oscillator, in all power-managed modes, is often the time base for functions, such as a Real-Time Clock (RTC). Most often, a 32.768 kHz watch crystal is connected between the RC0/T1OSO/T1CKI/RP11 and RC1/T1OSI/$\overline{\text{UOE}}$/RP12 pins. Like the HS Oscillator mode circuits, loading capacitors are also connected from each pin to ground. The Timer1 oscillator is discussed in larger detail in **Section 13.5 "Timer1 Oscillator"**.

In addition to being a primary clock source, the **postscaled internal clock** is available as a power-managed mode clock source. The INTRC source is also used as the clock source for several special features, such as the WDT and Fail-Safe Clock Monitor (FSCM).

3.5.1 OSCILLATOR CONTROL REGISTER

The OSCCON register (Register 3-2) controls several aspects of the device clock's operation, both in full-power operation and in power-managed modes.

The System Clock Select bits, SCS<1:0>, select the clock source. The available clock sources are the primary clock (defined by the FOSC<2:0> Configuration bits), the secondary clock (Timer1 oscillator) and the postscaled internal clock.The clock source changes immediately, after one or more of the bits is written to, following a brief clock transition interval. The SCS bits are cleared on all forms of Reset.

The Internal Oscillator Frequency Select bits, IRCF<2:0>, select the frequency output provided on the postscaled internal clock line. The choices are the INTRC source, the INTOSC source (8 MHz) or one of the frequencies derived from the INTOSC postscaler (31 kHz to 4 MHz). If the postscaled internal clock is supplying the device clock, changing the states of these bits will have an immediate change on the internal oscillator's output. On device Resets, the default output frequency of the INTOSC postscaler is set at 4 MHz.

When an output frequency of 31 kHz is selected (IRCF<2:0> = 000), users may choose the internal oscillator, which acts as the source. This is done with the INTSRC bit in the OSCTUNE register (OSCTUNE<7>). Setting this bit selects INTOSC as a 31.25 kHz clock source by enabling the divide-by-256 output of the INTOSC postscaler. Clearing INTSRC selects INTRC (nominally 31 kHz) as the clock source.

This option allows users to select the tunable and more precise INTOSC as a clock source, while maintaining power savings with a very low clock speed. Regardless of the setting of INTSRC, INTRC always remains the clock source for features such as the WDT and the FSCM.

The OSTS and T1RUN bits indicate which clock source is currently providing the device clock. The OSTS bit indicates that the Oscillator Start-up Timer (OST) has timed out and the primary clock is providing the device clock in primary clock modes. The T1RUN bit (T1CON<6>) indicates when the Timer1 oscillator is providing the device clock in secondary clock modes. In power-managed modes, only one of these bits will be set at any time. If none of these bits are set, the INTRC is providing the clock or the internal oscillator block has just started and is not yet stable.

The IDLEN bit determines if the device goes into Sleep mode, or one of the Idle modes, when the SLEEP instruction is executed.

© 2011 Microchip Technology Inc.

The use of the flag and control bits in the OSCCON register is discussed in more detail in **Section 4.0 "Low-Power Modes"**.

Note 1: The Timer1 crystal driver is enabled by setting the T1OSCEN bit in the Timer1 Control register (T1CON<3>). If the Timer1 oscillator is not enabled, then any attempt to select the Timer1 clock source will be ignored.

2: If Timer1 is driving a crystal, it is recommended that the Timer1 oscillator be operating and stable prior to switching to it as the clock source; otherwise, a very long delay may occur while the Timer1 oscillator starts.

3.5.2 OSCILLATOR TRANSITIONS

PIC18F46J50 family devices contain circuitry to prevent clock "glitches" when switching between clock sources. A short pause in the device clock occurs during the clock switch. The length of this pause is the sum of two cycles of the old clock source and three to four cycles of the new clock source. This formula assumes that the new clock source is stable.

Clock transitions are discussed in more detail in **Section 4.1.2 "Entering Power-Managed Modes"**.

REGISTER 3-2: OSCCON: OSCILLATOR CONTROL REGISTER (ACCESS FD3h)

R/W-0	R/W-1	R/W-1	R/W-0	R-1(1)	U-1	R/W-0	R/W-0
IDLEN	IRCF2	IRCF1	IRCF0	OSTS	—	SCS1	SCS0
bit 7							bit 0

Legend:			
R = Readable bit	W = Writable bit	U = Unimplemented bit	
-n = Value at POR	'1' = Bit is set	'0' = Bit is cleared	x = Bit is unknown

bit 7 **IDLEN:** Idle Enable bit
1 = Device enters Idle mode on SLEEP instruction
0 = Device enters Sleep mode on SLEEP instruction

bit 6-4 **IRCF<2:0>:** Internal Oscillator Frequency Select bits
111 = 8 MHz (INTOSC drives clock directly)
110 = 4 MHz(2)
101 = 2 MHz
100 = 1 MHz
011 = 500 kHz
010 = 250 kHz
001 = 125 kHz
000 = 31 kHz (from either INTOSC/256 or INTRC directly)(3)

bit 3 **OSTS:** Oscillator Start-up Time-out Status bit(1)
1 = Oscillator Start-up Timer time-out has expired; primary oscillator is running
0 = Oscillator Start-up Timer time-out is running; primary oscillator is not ready

bit 2 **Unimplemented:** Read as '1'

bit 1-0 **SCS<1:0>:** System Clock Select bits
11 = Postscaled internal clock (INTRC/INTOSC derived)
10 = Reserved
01 = Timer1 oscillator(4)
00 = Primary clock source (INTOSC postscaler output when FOSC<2:0> = 001 or 000)
00 = Primary clock source (CPU divider output for other values of FOSC<2:0>)

Note 1: Reset value is '0' when Two-Speed Start-up is enabled and '1' if disabled.
2: Default output frequency of INTOSC on Reset (4 MHz).
3: Source selected by the INTSRC bit (OSCTUNE<7>).
4: Application firmware should first enable the Timer1 oscillator crystal driver by setting the T1OSCEN bit.

3.6 Reference Clock Output

In addition to the peripheral clock/4 output in certain oscillator modes, the device clock in the PIC18F46J50 family can also be configured to provide a reference clock output signal to a port pin. This feature is available in all oscillator configurations and allows the user to select a greater range of clock submultiples to drive external devices in the application.

This reference clock output is controlled by the REFOCON register (Register 3-3). Setting the ROON bit (REFOCON<7>) makes the clock signal available on the REFO (RB2) pin. The RODIV<3:0> bits enable the selection of 16 different clock divider options.

The ROSSLP and ROSEL bits (REFOCON<5:4>) control the availability of the reference output during Sleep mode. The ROSEL bit determines if the oscillator is on OSC1 and OSC2, or the current system clock source is used for the reference clock output. The ROSSLP bit determines if the reference source is available on RB2 when the device is in Sleep mode.

To use the reference clock output in Sleep mode, both the ROSSLP and ROSEL bits must be set. The device clock must also be configured for an EC or HS mode; otherwise, the oscillator on OSC1 and OSC2 will be powered down when the device enters Sleep mode. Clearing the ROSEL bit allows the reference output frequency to change as the system clock changes during any clock switches.

REGISTER 3-3: REFOCON: REFERENCE OSCILLATOR CONTROL REGISTER (BANKED F3Dh)

R/W-0	U-0	R/W-0	R/W-0	R/W-0	R/W-0	R/W-0	R/W-0
ROON	—	ROSSLP	ROSEL	RODIV3	RODIV2	RODIV1	RODIV0
bit 7							bit 0

Legend:			
R = Readable bit	W = Writable bit	U = Unimplemented bit, read as ‘0’	
-n = Value at POR	‘1’ = Bit is set	‘0’ = Bit is cleared	x = Bit is unknown

bit 7 **ROON:** Reference Oscillator Output Enable bit
1 = Reference oscillator is enabled on REFO pin
0 = Reference oscillator is disabled

bit 6 **Unimplemented:** Read as ‘0’

bit 5 **ROSSLP:** Reference Oscillator Output Stop in Sleep bit
1 = Reference oscillator continues to run in Sleep
0 = Reference oscillator is disabled in Sleep

bit 4 **ROSEL:** Reference Oscillator Source Select bit
1 = Primary oscillator crystal/resonator is used as the base clock(1)
0 = System clock (FOSC) is used as the base clock; base clock reflects any clock switching of the device

bit 3-0 **RODIV<3:0>:** Reference Oscillator Divisor Select bits
1111 = Base clock value divided by 32,768
1110 = Base clock value divided by 16,384
1101 = Base clock value divided by 8,192
1100 = Base clock value divided by 4,096
1011 = Base clock value divided by 2,048
1010 = Base clock value divided by 1,024
1001 = Base clock value divided by 512
1000 = Base clock value divided by 256
0111 = Base clock value divided by 128
0110 = Base clock value divided by 64
0101 = Base clock value divided by 32
0100 = Base clock value divided by 16
0011 = Base clock value divided by 8
0010 = Base clock value divided by 4
0001 = Base clock value divided by 2
0000 = Base clock value

Note 1: The crystal oscillator must be enabled using the FOSC<2:0> bits. The crystal maintains the operation in Sleep mode.

© 2011 Microchip Technology Inc.

3.7 Effects of Power-Managed Modes on Various Clock Sources

When the PRI_IDLE mode is selected, the designated primary oscillator continues to run without interruption. For all other power-managed modes, the oscillator using the OSC1 pin is disabled. Unless the USB module is enabled, the OSC1 pin (and OSC2 pin if used by the oscillator) will stop oscillating.

In secondary clock modes (SEC_RUN and SEC_IDLE), the Timer1 oscillator is operating and providing the device clock. The Timer1 oscillator may also run in all power-managed modes if required to clock Timer1 or Timer3.

In internal oscillator modes (RC_RUN and RC_IDLE), the internal oscillator block provides the device clock source. The 31 kHz INTRC output can be used directly to provide the clock and may be enabled to support various special features regardless of the power-managed mode (see **Section 27.2 "Watchdog Timer (WDT)"**, **Section 27.4 "Two-Speed Start-up"** and **Section 27.5 "Fail-Safe Clock Monitor"** for more information on WDT, FSCM and Two-Speed Start-up). The INTOSC output at 8 MHz may be used directly to clock the device or may be divided down by the post-scaler. The INTOSC output is disabled if the clock is provided directly from the INTRC output.

If Sleep mode is selected, all clock sources which are no longer required are stopped. Since all the transistor switching currents have been stopped, Sleep mode achieves the lowest current consumption of the device (only leakage currents) outside of Deep Sleep.

Sleep mode should not be invoked while the USB module is enabled and operating in Full-Power mode. Before Sleep mode is selected, the USB module should be put in the suspend state. This is accomplished by setting the SUSPND bit in the UCON register.

Enabling any on-chip feature that will operate during Sleep mode increases the current consumed during Sleep mode. The INTRC is required to support WDT operation. The Timer1 oscillator may be operating to support a RTC. Other features may be operating that do not require a device clock source (i.e., MSSP slave, PMP, INTx pins, etc.). Peripherals that may add significant current consumption are listed in **Section 30.2 "DC Characteristics: Power-Down and Supply Current PIC18F46J50 Family (Industrial)"**.

3.8 Power-up Delays

Power-up delays are controlled by two timers so that no external Reset circuitry is required for most applications. The delays ensure that the device is kept in Reset until the device power supply is stable under normal circumstances and the primary clock is operating and stable. For additional information on power-up delays, see **Section 5.6 "Power-up Timer (PWRT)"**.

The first timer is the Power-up Timer (PWRT), which provides a fixed delay on power-up (Parameter 33, Table 30-14).

The second timer is the Oscillator Start-up Timer (OST), intended to keep the chip in Reset until the crystal oscillator is stable (HS mode). The OST does this by counting 1024 oscillator cycles before allowing the oscillator to clock the device.

There is a delay of interval, T_{CSD} (Parameter 38, Table 30-14), following POR, while the controller becomes ready to execute instructions. This delay runs concurrently with any other delays. This may be the only delay that occurs when any of the internal oscillator or EC modes are used as the primary clock source.

© 2011 Microchip Technology Inc.

NOTES:

© 2011 Microchip Technology Inc.

4.0 LOW-POWER MODES

The PIC18F46J50 family devices can manage power consumption through clocking to the CPU and the peripherals. In general, reducing the clock frequency and number of circuits being clocked reduce power consumption.

For managing power in an application, the primary modes of operation are:

- Run Mode
- Idle Mode
- Sleep Mode
- Deep Sleep Mode

Additionally, there is an Ultra Low-Power Wake-up (ULPWU) mode for generating an interrupt-on-change on RA0.

These modes define which portions of the device are clocked and at what speed.

- The Run and Idle modes can use any of the three available clock sources (primary, secondary or internal oscillator blocks).
- The Sleep mode does not use a clock source.

The ULPWU mode on RA0 allows a slow falling voltage to generate an interrupt-on-change on RA0 without excess current consumption. See **Section 4.7 "Ultra Low-Power Wake-up"**.

The power-managed modes include several power-saving features offered on previous PIC® devices, such as clock switching, ULPWU and Sleep mode. In addition, the PIC18F46J50 family devices add a new power-managed Deep Sleep mode.

4.1 Selecting Power-Managed Modes

Selecting a power-managed mode requires these decisions:

- Will the CPU be clocked?
- If so, which clock source will be used?

The IDLEN bit (OSCCON<7>) controls CPU clocking and the SCS<1:0> bits (OSCCON<1:0>) select the clock source. The individual modes, bit settings, clock sources and affected modules are summarized in Table 4-1.

4.1.1 CLOCK SOURCES

The SCS<1:0> bits allow the selection of one of three clock sources for power-managed modes. They are:

- Primary clock source – Defined by the FOSC<2:0> Configuration bits
- Timer1 clock – Provided by the secondary oscillator
- Postscaled internal clock – Derived from the internal oscillator block

4.1.2 ENTERING POWER-MANAGED MODES

Switching from one clock source to another begins by loading the OSCCON register. The SCS<1:0> bits select the clock source.

Changing these bits causes an immediate switch to the new clock source, assuming that it is running. The switch also may be subject to clock transition delays. These delays are discussed in **Section 4.1.3 "Clock Transitions and Status Indicators"** and subsequent sections.

Entry to the power-managed Idle or Sleep modes is triggered by the execution of a SLEEP instruction. The actual mode that results depends on the status of the IDLEN bit.

Depending on the current mode and the mode being switched to, a change to a power-managed mode does not always require setting all of these bits. Many transitions may be done by changing the oscillator select bits, the IDLEN bit, or the DSEN bit prior to issuing a SLEEP instruction.

If the IDLEN and DSEN bits are already configured correctly, it only may be necessary to perform a SLEEP instruction to switch to the desired mode.

TABLE 4-1: LOW-POWER MODES

Mode	DSCONH<7>	OSCCON<7,1:0>		Module Clocking		Available Clock and Oscillator Source
	DSEN(1)	IDLEN(1)	SCS<1:0>	CPU	Peripherals	
Sleep	0	0	N/A	Off	Off	Timer1 oscillator and/or RTCC may optionally be enabled
Deep Sleep	1	0	N/A	Off(2)	Off	RTCC can run uninterrupted using the Timer1 or internal low-power RC oscillator
PRI_RUN	0	N/A	00	Clocked	Clocked	The normal, full-power execution mode; primary clock source (defined by FOSC<2:0>)
SEC_RUN	0	N/A	01	Clocked	Clocked	Secondary – Timer1 oscillator
RC_RUN	0	N/A	11	Clocked	Clocked	Postscaled internal clock
PRI_IDLE	0	1	00	Off	Clocked	Primary clock source (defined by FOSC<2:0>)
SEC_IDLE	0	1	01	Off	Clocked	Secondary – Timer1 oscillator
RC_IDLE	0	1	11	Off	Clocked	Postscaled internal clock

Note 1: IDLEN and DSEN reflect their values when the SLEEP instruction is executed.

2: Deep Sleep turns off the voltage regulator for ultra low-power consumption. See **Section 4.6 "Deep Sleep Mode"** for more information.

4.1.3 CLOCK TRANSITIONS AND STATUS INDICATORS

The length of the transition between clock sources is the sum of two cycles of the old clock source and three to four cycles of the new clock source. This formula assumes that the new clock source is stable.

Two bits indicate the current clock source and its status: OSTS (OSCCON<3>) and T1RUN (T1CON<6>). In general, only one of these bits will be set in a given power-managed mode. When the OSTS bit is set, the primary clock would be providing the device clock. When the T1RUN bit is set, the Timer1 oscillator would be providing the clock. If neither of these bits is set, INTRC would be clocking the device.

Note:	Executing a SLEEP instruction does not necessarily place the device into Sleep mode. It acts as the trigger to place the controller into either the Sleep or Deep Sleep mode, or one of the Idle modes, depending on the setting of the IDLEN bit.

4.1.4 MULTIPLE SLEEP COMMANDS

The power-managed mode that is invoked with the SLEEP instruction is determined by the setting of the IDLEN and DSEN bits at the time the instruction is executed. If another SLEEP instruction is executed, the device will enter the power-managed mode specified by IDLEN and DSEN at that time. If IDLEN or DSEN have changed, the device will enter the new power-managed mode specified by the new setting.

4.2 Run Modes

In the Run modes, clocks to both the core and peripherals are active. The difference between these modes is the clock source.

4.2.1 PRI_RUN MODE

The PRI_RUN mode is the normal, full-power execution mode of the microcontroller. This is also the default mode upon a device Reset unless Two-Speed Start-up is enabled (see **Section 27.4 "Two-Speed Start-up"** for details). In this mode, the OSTS bit is set (see **Section 3.5.1 "Oscillator Control Register"**).

4.2.2 SEC_RUN MODE

The SEC_RUN mode is the compatible mode to the "clock switching" feature offered in other PIC18 devices. In this mode, the CPU and peripherals are clocked from the Timer1 oscillator. This gives users the option of low-power consumption while still using a high-accuracy clock source.

SEC_RUN mode is entered by setting the SCS<1:0> bits to '01'. The device clock source is switched to the Timer1 oscillator (see Figure 4-1), the primary oscillator is shut down, the T1RUN bit (T1CON<6>) is set and the OSTS bit is cleared.

Note:	The Timer1 oscillator should already be running prior to entering SEC_RUN mode. If the T1OSCEN bit is not set when the SCS<1:0> bits are set to '01', entry to SEC_RUN mode will not occur. If the Timer1 oscillator is enabled, but not yet running, device clocks will be delayed until the oscillator has started. In such situations, initial oscillator operation is far from stable and unpredictable operation may result.

© 2011 Microchip Technology Inc.

On transitions from SEC_RUN mode to PRI_RUN mode, the peripherals and CPU continue to be clocked from the Timer1 oscillator while the primary clock is started. When the primary clock becomes ready, a clock switch back to the primary clock occurs (see Figure 4-2). When the clock switch is complete, the T1RUN bit is cleared, the OSTS bit is set and the primary clock would be providing the clock. The IDLEN and SCS bits are not affected by the wake-up; the Timer1 oscillator continues to run.

FIGURE 4-1: TRANSITION TIMING FOR ENTRY TO SEC_RUN MODE

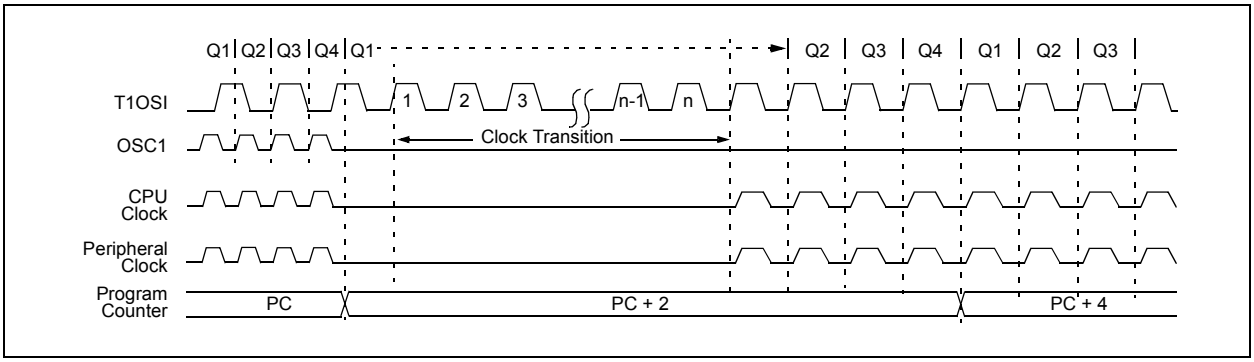

FIGURE 4-2: TRANSITION TIMING FROM SEC_RUN MODE TO PRI_RUN MODE (HSPLL)

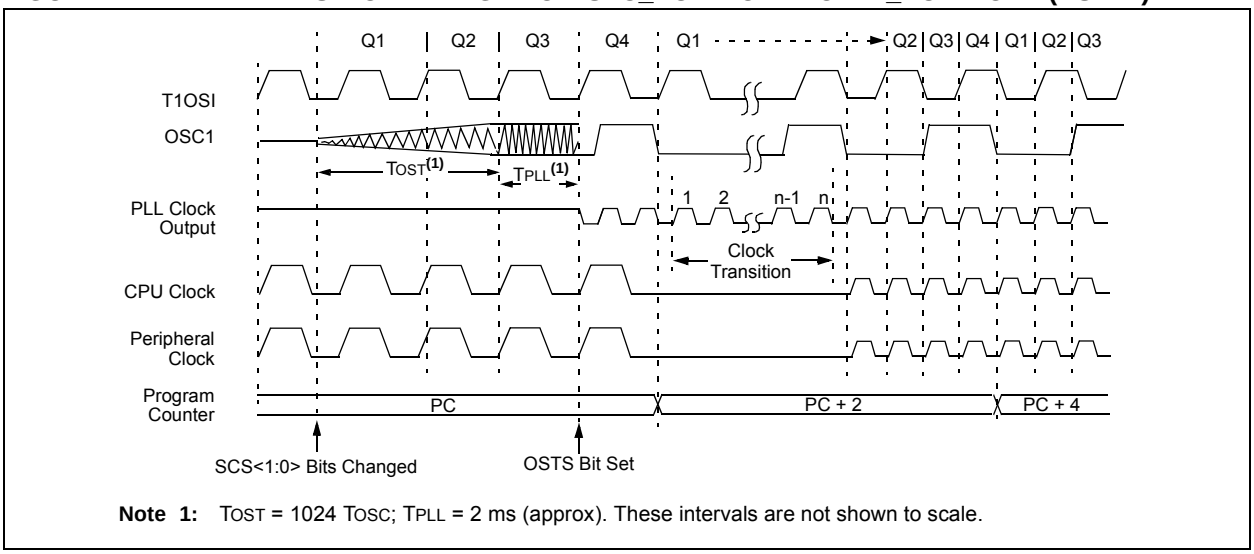

Note 1: TOST = 1024 TOSC; TPLL = 2 ms (approx). These intervals are not shown to scale.

4.2.3 RC_RUN MODE

In RC_RUN mode, the CPU and peripherals are clocked from the internal oscillator; the primary clock is shut down. This mode provides the best power conservation of all the Run modes while still executing code. It works well for user applications, which are not highly timing-sensitive or do not require high-speed clocks at all times.

This mode is entered by setting the SCS<1:0> bits (OSCCON<1:0>) to '11'. When the clock source is switched to the internal oscillator block (see Figure 4-3), the primary oscillator is shutdown and the OSTS bit is cleared.

On transitions from RC_RUN mode to PRI_RUN mode, the device continues to be clocked from the INTOSC block while the primary clock is started. When the primary clock becomes ready, a clock switch to the primary clock occurs (see Figure 4-4). When the clock switch is complete, the OSTS bit is set and the primary clock is providing the device clock. The IDLEN and SCS bits are not affected by the switch. The INTRC clock source will continue to run if either the WDT or the FSCM is enabled.

FIGURE 4-3: TRANSITION TIMING TO RC_RUN MODE

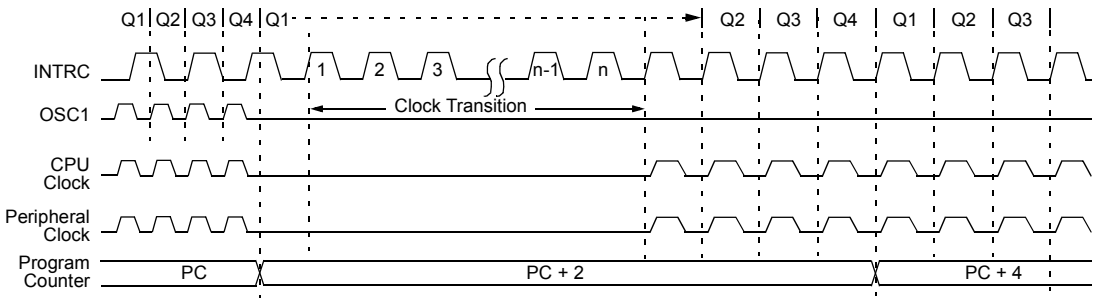

FIGURE 4-4: TRANSITION TIMING FROM RC_RUN MODE TO PRI_RUN MODE

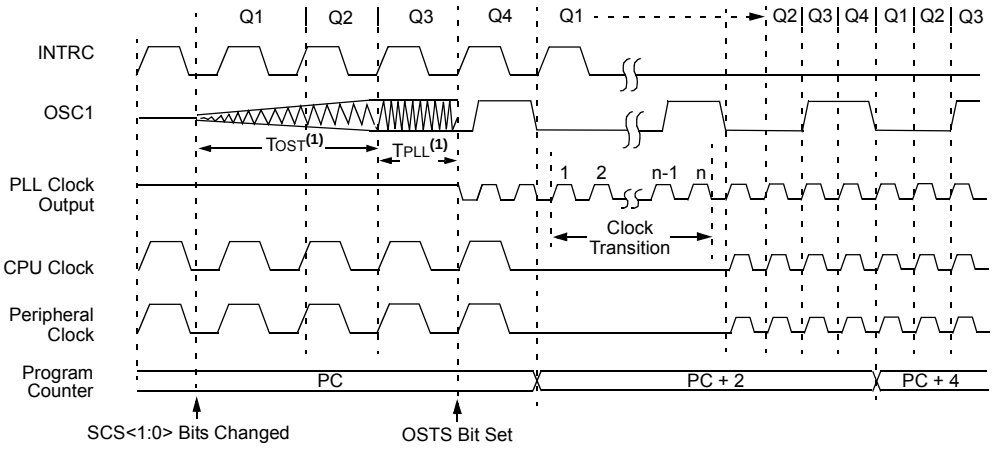

Note 1: TOST = 1024 TOSC; TPLL = 2 ms (approx). These intervals are not shown to scale.

© 2011 Microchip Technology Inc.

4.3 Sleep Mode

The power-managed Sleep mode is identical to the legacy Sleep mode offered in all other PIC devices. It is entered by clearing the IDLEN bit (the default state on device Reset) and executing the SLEEP instruction. This shuts down the selected oscillator (Figure 4-5). All clock source status bits are cleared.

Entering the Sleep mode from any other mode does not require a clock switch. This is because no clocks are needed once the controller has entered Sleep mode. If the WDT is selected, the INTRC source will continue to operate. If the Timer1 oscillator is enabled, it will also continue to run.

When a wake event occurs in Sleep mode (by interrupt, Reset or WDT time-out), the device will not be clocked until the clock source selected by the SCS<1:0> bits becomes ready (see Figure 4-6), or it will be clocked from the internal oscillator if either the Two-Speed Start-up or the FSCM are enabled (see **Section 27.0 "Special Features of the CPU"**). In either case, the OSTS bit is set when the primary clock is providing the device clocks. The IDLEN and SCS bits are not affected by the wake-up.

FIGURE 4-5: TRANSITION TIMING FOR ENTRY TO SLEEP MODE

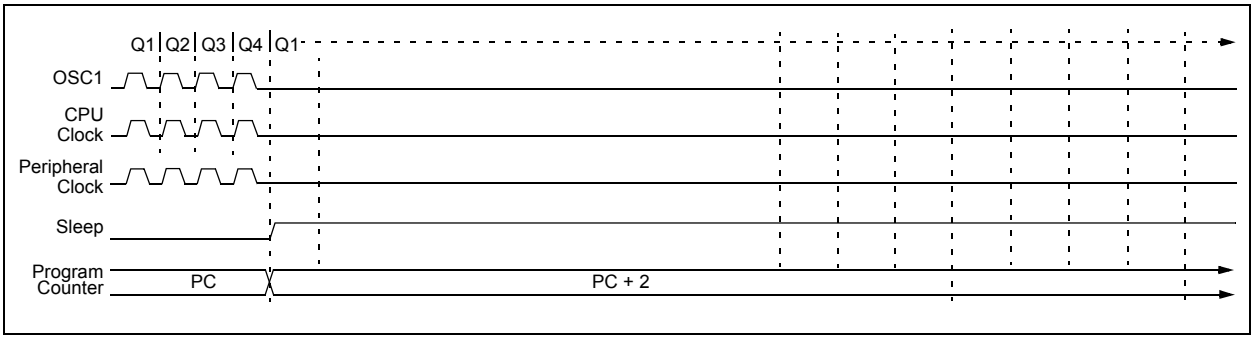

FIGURE 4-6: TRANSITION TIMING FOR WAKE FROM SLEEP (HSPLL)

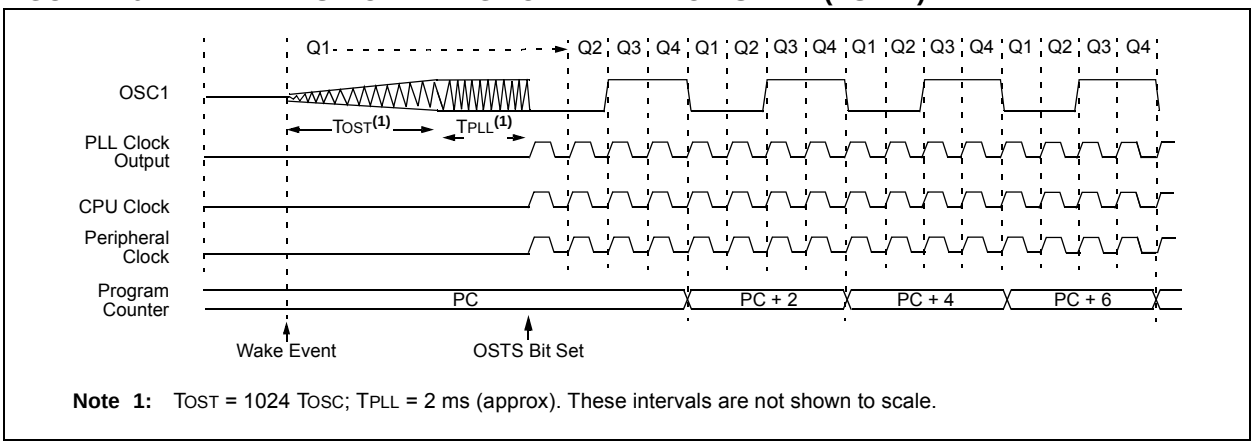

Note 1: TOST = 1024 TOSC; TPLL = 2 ms (approx). These intervals are not shown to scale.

4.4 Idle Modes

The Idle modes allow the controller's CPU to be selectively shut down while the peripherals continue to operate. Selecting a particular Idle mode allows users to further manage power consumption.

If the IDLEN bit is set to '1' when a SLEEP instruction is executed, the peripherals will be clocked from the clock source selected using the SCS<1:0> bits; however, the CPU will not be clocked. The clock source status bits are not affected. Setting IDLEN and executing a SLEEP instruction provides a quick method of switching from a given Run mode to its corresponding Idle mode.

If the WDT is selected, the INTRC source will continue to operate. If the Timer1 oscillator is enabled, it will also continue to run.

Since the CPU is not executing instructions, the only exits from any of the Idle modes are by interrupt, WDT time-out or a Reset. When the CPU begins executing code, it resumes with the same clock source for the current Idle mode. For example, when waking from RC_IDLE mode, the internal oscillator block will clock the CPU and peripherals (in other words, RC_RUN mode). The IDLEN and SCS bits are not affected by the wake-up.

While in any Idle or Sleep mode, a WDT time-out will result in a WDT wake-up to the Run mode currently specified by the SCS<1:0> bits.

4.4.1 PRI_IDLE MODE

This mode is unique among the three low-power Idle modes, in that it does not disable the primary device clock. For timing-sensitive applications, this allows for the fastest resumption of device operation with its more accurate primary clock source, since the clock source does not have to "warm up" or transition from another oscillator.

PRI_IDLE mode is entered from PRI_RUN mode by setting the IDLEN bit and executing a SLEEP instruction. If the device is in another Run mode, set IDLEN first, then set the SCS bits to '00' and execute SLEEP. Although the CPU is disabled, the peripherals continue to be clocked from the primary clock source specified by the FOSC<1:0> Configuration bits. The OSTS bit remains set (see Figure 4-7).

When a wake event occurs, the CPU is clocked from the primary clock source. After the wake-up, the OSTS bit remains set. The IDLEN and SCS bits are not affected by the wake-up (see Figure 4-8).

4.4.2 SEC_IDLE MODE

In SEC_IDLE mode, the CPU is disabled but the peripherals continue to be clocked from the Timer1 oscillator. This mode is entered from SEC_RUN by setting the IDLEN bit and executing a SLEEP instruction. If the device is in another Run mode, set IDLEN first, then set SCS<1:0> to '01' and execute SLEEP. When the clock source is switched to the Timer1 oscillator, the primary oscillator is shut down (unless some other peripheral is still requesting it), the OSTS bit is cleared and the T1RUN bit is set.

When a wake event occurs, the peripherals continue to be clocked from the Timer1 oscillator. After a wake event, the CPU begins executing code being clocked by the Timer1 oscillator. The IDLEN and SCS bits are not affected by the wake-up; the Timer1 oscillator continues to run (see Figure 4-8).

Note:	The Timer1 oscillator should already be running prior to entering SEC_IDLE mode. If the T1OSCEN bit is not set when the SLEEP instruction is executed, the SLEEP instruction will be ignored and entry to SEC_IDLE mode will not occur. If the Timer1 oscillator is enabled, but not yet running, peripheral clocks will be delayed until the oscillator has started. In such situations, initial oscillator operation is far from stable and unpredictable operation may result.

FIGURE 4-7: TRANSITION TIMING FOR ENTRY TO IDLE MODE

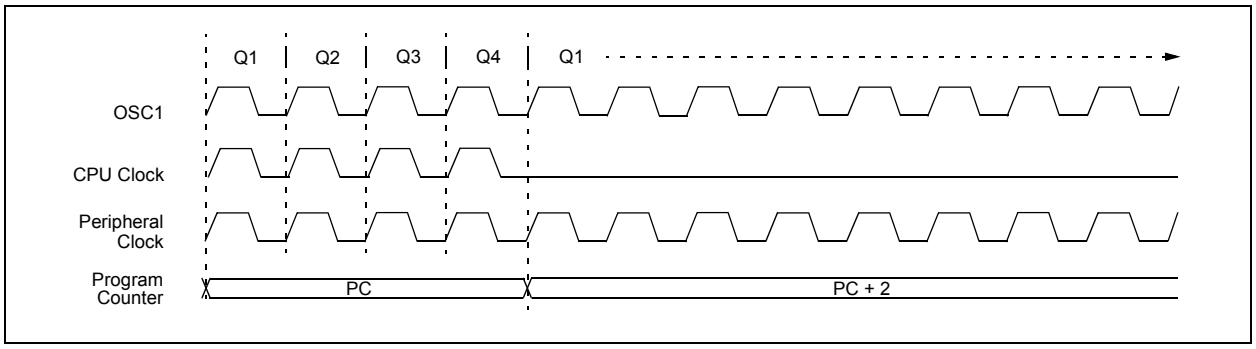

© 2011 Microchip Technology Inc.

FIGURE 4-8: TRANSITION TIMING FOR WAKE FROM IDLE TO RUN MODE

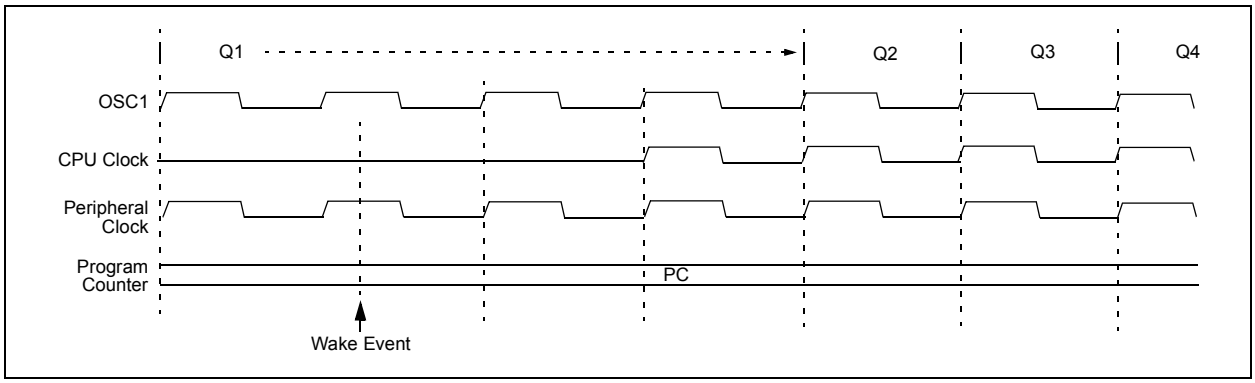

4.4.3 RC_IDLE MODE

In RC_IDLE mode, the CPU is disabled but the peripherals continue to be clocked from the internal oscillator block. This mode allows for controllable power conservation during Idle periods.

From RC_RUN, this mode is entered by setting the IDLEN bit and executing a SLEEP instruction. If the device is in another Run mode, first set IDLEN, then clear the SCS bits and execute SLEEP. When the clock source is switched to the INTOSC block, the primary oscillator is shutdown and the OSTS bit is cleared.

When a wake event occurs, the peripherals continue to be clocked from the internal oscillator block. After a wake event, the CPU begins executing code being clocked by the INTRC. The IDLEN and SCS bits are not affected by the wake-up. The INTRC source will continue to run if either the WDT or the FSCM is enabled.

4.5 Exiting Idle and Sleep Modes

An exit from Sleep mode, or any of the Idle modes, is triggered by an interrupt, a Reset or a WDT time-out. This section discusses the triggers that cause exits from power-managed modes. The clocking subsystem actions are discussed in each of the power-managed modes sections (see **Section 4.2 "Run Modes"**, **Section 4.3 "Sleep Mode"** and **Section 4.4 "Idle Modes"**).

4.5.1 EXIT BY INTERRUPT

Any of the available interrupt sources can cause the device to exit from an Idle mode, or the Sleep mode, to a Run mode. To enable this functionality, an interrupt source must be enabled by setting its enable bit in one of the INTCON or PIE registers. The exit sequence is initiated when the corresponding interrupt flag bit is set.

On all exits from Idle or Sleep modes by interrupt, code execution branches to the interrupt vector if the GIE/GIEH bit (INTCON<7>) is set. Otherwise, code execution continues or resumes without branching (see **Section 9.0 "Interrupts"**).

4.5.2 EXIT BY WDT TIME-OUT

A WDT time-out will cause different actions depending on which power-managed mode the device is, when the time-out occurs.

If the device is not executing code (all Idle modes and Sleep mode), the time-out will result in an exit from the power-managed mode (see **Section 4.2 "Run Modes"** and **Section 4.3 "Sleep Mode"**). If the device is executing code (all Run modes), the time-out will result in a WDT Reset (see **Section 27.2 "Watchdog Timer (WDT)"**).

The WDT and postscaler are cleared by one of the following events:

- Executing a SLEEP or CLRWDT instruction
- The loss of a currently selected clock source (if the FSCM is enabled)

4.5.3 EXIT BY RESET

Exiting an Idle or Sleep mode by Reset automatically forces the device to run from the INTRC.

4.5.4 EXIT WITHOUT AN OSCILLATOR START-UP DELAY

Certain exits from power-managed modes do not invoke the OST at all. There are two cases:

- PRI_IDLE mode (where the primary clock source is not stopped) and the primary clock source is the EC mode
- PRI_IDLE mode and the primary clock source is the ECPLL mode

In these instances, the primary clock source either does not require an oscillator start-up delay, since it is already running (PRI_IDLE), or normally does not require an oscillator start-up delay (EC).

4.6 Deep Sleep Mode

Deep Sleep mode brings the device into its lowest power consumption state without requiring the use of external switches to remove power from the device. During Deep Sleep, the on-chip V_{DDCORE} voltage regulator is powered down, effectively disconnecting power to the core logic of the microcontroller.

Note:	Since Deep Sleep mode powers down the microcontroller by turning off the on-chip V_{DDCORE} voltage regulator, Deep Sleep capability is available only on PIC18FXXJ members in the device family. The on-chip voltage regulator is not available on PIC18LFXXJ members of the device family, and therefore, they do not support Deep Sleep.

On devices that support it, the Deep Sleep mode is entered by:

- Setting the REGSLP (WDTCON<7>) bit
- Clearing the IDLEN bit
- Clearing the GIE bit
- Setting the DSEN bit (DSCONH<7>)
- Executing the SLEEP instruction immediately after setting DSEN (no delay or interrupts in between)

In order to minimize the possibility of inadvertently entering Deep Sleep, the DSEN bit is cleared in hardware, two instruction cycles after having been set. Therefore, in order to enter Deep Sleep, the SLEEP instruction must be executed in the immediate instruction cycle after setting DSEN. If DSEN is not set when Sleep is executed, the device will enter conventional Sleep mode instead.

During Deep Sleep, the core logic circuitry of the microcontroller is powered down to reduce leakage current. Therefore, most peripherals and functions of the microcontroller become unavailable during Deep Sleep. However, a few specific peripherals and functions are powered directly from the V_{DD} supply rail of the microcontroller, and therefore, can continue to function in Deep Sleep.

Entering Deep Sleep mode clears the DSWAKEL register. However, if the Real-Time Clock and Calendar (RTCC) is enabled prior to entering Deep Sleep, it will continue to operate uninterrupted.

The device has a dedicated Brown-out Reset (DSBOR) and Watchdog Timer Reset (DSWDT) for monitoring voltage and time-out events in Deep Sleep. The DSBOR and DSWDT are independent of the standard BOR and WDT used with other power-managed modes (Run, Idle and Sleep).

When a wake event occurs in Deep Sleep mode (by $\overline{MCLR}$ Reset, RTCC alarm, INT0 interrupt, ULPWU or DSWDT), the device will exit Deep Sleep mode and perform a Power-on Reset (POR). When the device is released from Reset, code execution will resume at the device's Reset vector.

4.6.1 PREPARING FOR DEEP SLEEP

Because V_{DDCORE} could fall below the SRAM retention voltage while in Deep Sleep mode, SRAM data could be lost in Deep Sleep. Exiting Deep Sleep mode causes a POR; as a result, most Special Function Registers (SFRs) will reset to their default POR values.

Applications needing to save a small amount of data throughout a Deep Sleep cycle can save the data to the general purpose DSGPR0 and DSGPR1 registers. The contents of these registers are preserved while the device is in Deep Sleep, and will remain valid throughout an entire Deep Sleep entry and wake-up sequence.

© 2011 Microchip Technology Inc.

4.6.2 I/O PINS DURING DEEP SLEEP

During Deep Sleep, the general purpose I/O pins will retain their previous states.

Pins that are configured as inputs (TRIS bit set) prior to entry into Deep Sleep will remain high impedance during Deep Sleep.

Pins that are configured as outputs (TRIS bit clear) prior to entry into Deep Sleep will remain as output pins during Deep Sleep. While in this mode, they will drive the output level determined by their corresponding LAT bit at the time of entry into Deep Sleep.

When the device wakes back up, the I/O pin behavior depends on the type of wake up source.

If the device wakes back up by an RTCC alarm, INT0 interrupt, DSWDT or ULPWU event, all I/O pins will continue to maintain their previous states, even after the device has finished the POR sequence and is executing application code again. Pins configured as inputs during Deep Sleep will remain high impedance, and pins configured as outputs will continue to drive their previous value.

After waking up, the TRIS and LAT registers will be reset, but the I/O pins will still maintain their previous states. If firmware modifies the TRIS and LAT values for the I/O pins, they will not immediately go to the newly configured states. Once the firmware clears the RELEASE bit (DSCONL<0>), the I/O pins will be "released". This causes the I/O pins to take the states configured by their respective TRIS and LAT bit values.

If the Deep Sleep BOR (DSBOR) circuit is enabled, and V_{DD} drops below the DSBOR and V_{DD} rail POR thresholds, the I/O pins will be immediately released similar to clearing the RELEASE bit. All previous state information will be lost, including the general purpose DSGPR0 and DSGPR1 contents. See **Section 4.6.5 "Deep Sleep Brown-Out Reset (DSBOR)"** for additional details regarding this scenario

If a $\overline{MCLR}$ Reset event occurs during Deep Sleep, the I/O pins will also be released automatically, but in this case, the DSGPR0 and DSGPR1 contents will remain valid.

In all other Deep Sleep wake-up cases, application firmware needs to clear the RELEASE bit in order to reconfigure the I/O pins.

4.6.3 DEEP SLEEP WAKE-UP SOURCES

The device can be awakened from Deep Sleep mode by a $\overline{MCLR}$, POR, RTCC, INT0 I/O pin interrupt, DSWDT or ULPWU event. After waking, the device performs a POR. When the device is released from Reset, code execution will begin at the device's Reset vector.

The software can determine if the wake-up was caused from an exit from Deep Sleep mode by reading the DS bit (WDTCON<3>). If this bit is set, the POR was caused by a Deep Sleep exit. The DS bit must be manually cleared by the software.

The software can determine the wake event source by reading the DSWAKEH and DSWAKEL registers. When the application firmware is done using the DSWAKEH and DSWAKEL status registers, individual bits do not need to be manually cleared before entering Deep Sleep again. When entering Deep Sleep mode, these registers are automatically cleared.

4.6.3.1 Wake-up Event Considerations

Deep Sleep wake-up events are only monitored while the processor is fully in Deep Sleep mode. If a wake-up event occurs before Deep Sleep mode is entered, the event status will not be reflected in the DSWAKE registers. If the wake-up source asserts prior to entering Deep Sleep, the CPU will either go to the interrupt vector (if the wake source has an interrupt bit and the interrupt is fully enabled) or will abort the Deep Sleep entry sequence by executing past the SLEEP instruction if the interrupt was not enabled. In this case, a wake-up event handler should be placed after the SLEEP instruction to process the event and re-attempt entry into Deep Sleep, if desired.

When the device is in Deep Sleep with more than one wake-up source simultaneously enabled, only the first wake-up source to assert will be detected and logged in the DSWAKEH/DSWAKEL status registers.

4.6.4 DEEP SLEEP WATCHDOG TIMER (DSWDT)

Deep Sleep has its own dedicated WDT (DSWDT) with a postscaler for time-outs of 2.1 ms to 25.7 days, configurable through the bits, DSWDTPS<3:0>.

The DSWDT can be clocked from either the INTRC or the T1OSC/T1CKI input. If the T1OSC/T1CKI source will be used with a crystal, the T1OSCEN bit in the T1CON register needs to be set prior to entering Deep Sleep. The reference clock source is configured through the DSWDTOSC bit.

DSWDT is enabled through the DSWDTEN bit. Entering Deep Sleep mode automatically clears the DSWDT. See **Section 27.0 "Special Features of the CPU"** for more information.

4.6.5 DEEP SLEEP BROWN-OUT RESET (DSBOR)

The Deep Sleep module contains a dedicated Deep Sleep BOR (DSBOR) circuit. This circuit may be optionally enabled through the DSBOREN Configuration bit.

The DSBOR circuit monitors the VDD supply rail voltage. The behavior of the DSBOR circuit is described in **Section 5.4 "Brown-out Reset (BOR)"**.

4.6.6 RTCC PERIPHERAL AND DEEP SLEEP

The RTCC can operate uninterrupted during Deep Sleep mode. It can wake the device from Deep Sleep by configuring an alarm.

The RTCC clock source is configured with the RTCOSC bit (CONFIG3L<1>). The available reference clock sources are the INTRC and T1OSC/T1CKI. If the INTRC is used, the RTCC accuracy will directly depend on the INTRC tolerance.For more information on configuring the RTCC peripheral, see **Section 17.0 "Real-Time Clock and Calendar (RTCC)"**.

4.6.7 TYPICAL DEEP SLEEP SEQUENCE

This section gives the typical sequence for using the Deep Sleep mode. Optional steps are indicated, and additional information is given in notes at the end of the procedure.

1. Enable DSWDT (optional).(1)
2. Configure DSWDT clock source (optional).(2)
3. Enable DSBOR (optional).(1)
4. Enable RTCC (optional).(3)
5. Configure the RTCC peripheral (optional).(3)
6. Configure the ULPWU peripheral (optional).(4)
7. Enable the INT0 Interrupt (optional).
8. Context save SRAM data by writing to the DSGPR0 and DSGPR1 registers (optional).
9. Set the REGSLP bit (WDTCON<7>) and clear the IDLEN bit (OSCCON<7>).
10. If using an RTCC alarm for wake-up, wait until the RTCSYNC bit (RTCCFG<4>) is clear.
11. Enter Deep Sleep mode by setting the DSEN bit (DSCONH<7>) and issuing a SLEEP instruction. These two instructions must be executed back-to-back.
12. Once a wake-up event occurs, the device will perform a Power-on Reset sequence. Code execution resumes at the device's Reset vector.
13. Determine if the device exited Deep Sleep by reading the Deep Sleep bit, DS (WDTCON<3>). This bit will be set if there was an exit from Deep Sleep mode.
14. Clear the Deep Sleep bit, DS (WDTCON<3>).
15. Determine the wake-up source by reading the DSWAKEH and DSWAKEL registers.
16. Determine if a DSBOR event occurred during Deep Sleep mode by reading the DSBOR bit (DSCONL<1>).
17. Read the DSGPR0 and DSGPR1 Context Save registers (optional).
18. Clear the RELEASE bit (DSCONL<0>).

Note 1: DSWDT and DSBOR are enabled through the devices' Configuration bits. For more information, see **Section 27.1 "Configuration Bits"**.

2: The DSWDT and RTCC clock sources are selected through the devices' Configuration bits. For more information, see **Section 27.1 "Configuration Bits"**.

3: For more information, see **Section 17.0 "Real-Time Clock and Calendar (RTCC)"**.

4: For more information on configuring this peripheral, see **Section 4.7 "Ultra Low-Power Wake-up"**.

4.6.8 DEEP SLEEP FAULT DETECTION

If during Deep Sleep, the device is subjected to unusual operating conditions, such as an Electrostatic Discharge (ESD) event, it is possible that internal circuit states used by the Deep Sleep module could become corrupted. If this were to happen, the device may exhibit unexpected behavior, such as a failure to wake back up.

In order to prevent this type of scenario from occurring, the Deep Sleep module includes automatic self-monitoring capability. During Deep Sleep, critical internal nodes are continuously monitored in order to detect possible Fault conditions (which would not ordinarily occur). If a Fault condition is detected, the circuitry will set the DSFLT status bit (DSWAKEL<7>) and automatically wake the microcontroller from Deep Sleep, causing a POR.

During Deep Sleep, the Fault detection circuitry is always enabled and does not require any specific configuration prior to entering Deep Sleep.

© 2011 Microchip Technology Inc.

4.6.9 DEEP SLEEP MODE REGISTERS

Deep Sleep mode registers are provided in Register 4-1 through Register 4-6.

REGISTER 4-1: DSCONH: DEEP SLEEP CONTROL HIGH BYTE REGISTER (BANKED F4Dh)

R/W-0	U-0	U-0	U-0	U-0	R/W-0	R/W-0	R/W-0
DSEN(1)	—	—	—	—	r	DSULPEN	RTCWDIS
bit 7							bit 0

Legend:	r = Reserved bit		
R = Readable bit	W = Writable bit	U = Unimplemented bit, read as '0'	
-n = Value at POR	'1' = Bit is set	'0' = Bit is cleared	x = Bit is unknown

bit 7 **DSEN:** Deep Sleep Enable bit(1)
- 1 = Deep Sleep mode is entered on a SLEEP command
- 0 = Sleep mode is entered on a SLEEP command

bit 6-3 **Unimplemented:** Read as '0'

bit 2 **Reserved:** Always write '0' to this bit

bit 1 **DSULPEN:** Ultra Low-Power Wake-up Module Enable bit
- 1 = ULPWU module is enabled in Deep Sleep
- 0 = ULPWU module is disabled in Deep Sleep

bit 0 **RTCWDIS:** RTCC Wake-up Disable bit
- 1 = Wake-up from RTCC is disabled
- 0 = Wake-up from RTCC is enabled

Note 1: In order to enter Deep Sleep, Sleep must be executed immediately after setting DSEN.

REGISTER 4-2: DSCONL: DEEP SLEEP CONTROL LOW BYTE REGISTER (BANKED F4Ch)

U-0	U-0	U-0	U-0	U-0	R/W-0	R/W-0(1)	R/W-0(1)
—	—	—	—	—	ULPWDIS	DSBOR	RELEASE
bit 7							bit 0

Legend:			
R = Readable bit	W = Writable bit	U = Unimplemented bit, read as '0'	
-n = Value at POR	'1' = Bit is set	'0' = Bit is cleared	x = Bit is unknown

bit 7-3 **Unimplemented:** Read as '0'

bit 2 **ULPWDIS:** Ultra Low-Power Wake-up Disable bit
- 1 = ULPWU wake-up source is disabled
- 0 = ULPWU wake-up source is enabled (must also set DSULPEN = 1)

bit 1 **DSBOR:** Deep Sleep BOR Event Status bit
- 1 = DSBOREN was enabled and VDD dropped below the DSBOR arming voltage during Deep Sleep, but did not fall below VDSBOR
- 0 = DSBOREN was disabled or VDD did not drop below the DSBOR arming voltage during Deep Sleep

bit 0 **RELEASE:** I/O Pin State Release bit

Upon waking from Deep Sleep, the I/O pins maintain their previous states. Clearing this bit will release the I/O pins and allow their respective TRIS and LAT bits to control their states.

Note 1: This is the value when VDD is initially applied.

REGISTER 4-3: DSGPR0: DEEP SLEEP PERSISTENT GENERAL PURPOSE REGISTER 0 (BANKED F4Eh)

R/W-xxxx(1)	
Deep Sleep Persistent General Purpose bits	
bit 7	bit 0

Legend:			
R = Readable bit	W = Writable bit	U = Unimplemented bit, read as '0'	
-n = Value at POR	'1' = Bit is set	'0' = Bit is cleared	x = Bit is unknown

bit 7-0 Deep Sleep Persistent General Purpose bits
Contents are retained even in Deep Sleep mode.

Note 1: All register bits are maintained unless: V_{DDCORE} drops below the normal BOR threshold outside of Deep Sleep or the device is in Deep Sleep and the dedicated DSBOR is enabled and V_{DD} drops below the DSBOR threshold, or DSBOR is enabled or disabled, but V_{DD} is hard cycled to near V_{SS}.

REGISTER 4-4: DSGPR1: DEEP SLEEP PERSISTENT GENERAL PURPOSE REGISTER 1 (BANKED F4Fh)

R/W-xxxx(1)	
Deep Sleep Persistent General Purpose bits	
bit 7	bit 0

Legend:			
R = Readable bit	W = Writable bit	U = Unimplemented bit, read as '0'	
-n = Value at POR	'1' = Bit is set	'0' = Bit is cleared	x = Bit is unknown

bit 7-0 Deep Sleep Persistent General Purpose bits
Contents are retained even in Deep Sleep mode.

Note 1: All register bits are maintained unless: V_{DDCORE} drops below the normal BOR threshold outside of Deep Sleep or the device is in Deep Sleep and the dedicated DSBOR is enabled and V_{DD} drops below the DSBOR threshold, or DSBOR is enabled or disabled, but V_{DD} is hard cycled to near V_{SS}.

© 2011 Microchip Technology Inc.

REGISTER 4-5: DSWAKEH: DEEP SLEEP WAKE HIGH BYTE REGISTER (BANKED F4Bh)

U-0	U-0	U-0	U-0	U-0	U-0	U-0	R/W-0
—	—	—	—	—	—	—	DSINT0
bit 7							bit 0

Legend:			
R = Readable bit	W = Writable bit	U = Unimplemented bit, read as '0'	
-n = Value at POR	'1' = Bit is set	'0' = Bit is cleared	x = Bit is unknown

bit 7-1 **Unimplemented:** Read as '0'

bit 0 **DSINT0:** Interrupt-on-Change bit
1 = Interrupt-on-change was asserted during Deep Sleep
0 = Interrupt-on-change was not asserted during Deep Sleep

REGISTER 4-6: DSWAKEL: DEEP SLEEP WAKE LOW BYTE REGISTER (BANKED F4Ah)

R/W-0	U-0	R/W-0	R/W-0	R/W-0	R/W-0	U-0	R/W-1
DSFLT	—	DSULP	DSWDT	DSRTC	DSMCLR	—	DSPOR
bit 7							bit 0

Legend:			
R = Readable bit	W = Writable bit	U = Unimplemented bit, read as '0'	
-n = Value at POR	'1' = Bit is set	'0' = Bit is cleared	x = Bit is unknown

bit 7 **DSFLT:** Deep Sleep Fault Detected bit
1 = A Deep Sleep Fault was detected during Deep Sleep
0 = A Deep Sleep Fault was not detected during Deep Sleep

bit 6 **Unimplemented:** Read as '0'

bit 5 **DSULP:** Ultra Low-Power Wake-up Status bit
1 = An Ultra Low-Power Wake-up event occurred during Deep Sleep
0 = An Ultra Low-Power Wake-up event did not occur during Deep Sleep

bit 4 **DSWDT:** Deep Sleep Watchdog Timer Time-out bit
1 = The Deep Sleep Watchdog Timer timed out during Deep Sleep
0 = The Deep Sleep Watchdog Timer did not time out during Deep Sleep

bit 3 **DSRTC:** Real-Time Clock and Calendar Alarm bit
1 = The Real-Time Clock/Calendar triggered an alarm during Deep Sleep
0 = The Real-Time Clock /Calendar did not trigger an alarm during Deep Sleep

bit 2 **DSMCLR:** $\overline{\text{MCLR}}$ Event bit
1 = The $\overline{\text{MCLR}}$ pin was asserted during Deep Sleep
0 = The $\overline{\text{MCLR}}$ pin was not asserted during Deep Sleep

bit 1 **Unimplemented:** Read as '0'

bit 0 **DSPOR:** Power-on Reset Event bit
1 = The V_{DD} supply POR circuit was active and a POR event was detected(1)
0 = The V_{DD} supply POR circuit was not active, or was active, but did not detect a POR event

Note 1: Unlike the other bits in this register, this bit can be set outside of Deep Sleep.

4.7 Ultra Low-Power Wake-up

The Ultra Low-Power Wake-up (ULPWU) on RA0 allows a slow falling voltage to generate an interrupt-on-change without excess current consumption.

Follow these steps to use this feature:

1. Configure a remappable output pin to output the ULPOUT signal.
2. Map an INTx interrupt-on-change input function to the same pin as used for the ULPOUT output function. Alternatively, in Step 1, configure ULPOUT to output onto a PORTB interrupt-on-change pin.
3. Charge the capacitor on RA0 by configuring the RA0 pin to an output and setting it to '1'.
4. Enable interrupt-on-change (PIE bit) for the corresponding pin selected in Step 2.
5. Stop charging the capacitor by configuring RA0 as an input.
6. Discharge the capacitor by setting the ULPEN and ULPSINK bits in the WDTCON register.
7. Configure Sleep mode.
8. Enter Sleep mode.

When the voltage on RA0 drops below V_{IL}, an interrupt will be generated, which will cause the device to wake-up and execute the next instruction.

This feature provides a low-power technique for periodically waking up the device from Sleep mode. The time-out is dependent on the discharge time of the RC circuit on RA0.

When the ULPWU module causes the device to wake-up from Sleep mode, the WDTCON<ULPLVL> bit is set. When the ULPWU module causes the device to wake-up from Deep Sleep, the DSULP (DSWAKEL<5>) bit is set. Software can check these bits upon wake-up to determine the wake-up source. Also in Sleep mode, only the remappable output function, ULPWU, will output this bit value to an RPn pin for externally detecting wake-up events.

See Example 4-1 for initializing the ULPWU module.

Note: For module-related bit definitions, see the WDTCON register in **Section 27.2 "Watchdog Timer (WDT)"** and the DSWAKEL register (Register 4-6).

A series resistor between RA0 and the external capacitor provides overcurrent protection for the RA0/AN0/C1INA/ULPWU/RP0 pin and can allow for software calibration of the time-out (see Figure 4-9).

FIGURE 4-9: SERIAL RESISTOR

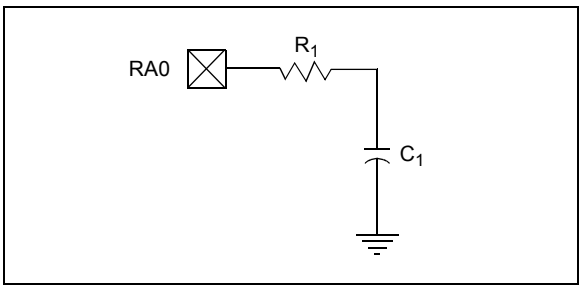

A timer can be used to measure the charge time and discharge time of the capacitor. The charge time can then be adjusted to provide the desired interrupt delay. This technique will compensate for the affects of temperature, voltage and component accuracy. The ULPWU peripheral can also be configured as a simple Programmable Low-Voltage Detect (LVD) or temperature sensor.

Note: For more information, refer to *AN879,* "*Using the Microchip Ultra Low-Power Wake-up Module*" application note (DS00879).

© 2011 Microchip Technology Inc.

EXAMPLE 4-1: ULTRA LOW-POWER WAKE-UP INITIALIZATION

```
//******************************************************************************
        //Configure a remappable output pin with interrupt capability
        //for ULPWU function (RP21 => RD4/INT1 in this example)
        //******************************************************************************
        RPOR21 = 13;// ULPWU function mapped to RP21/RD4
        RPINR1 = 21;// INT1 mapped to RP21 (RD4)

        //***************************
        //Charge the capacitor on RA0
        //***************************
        TRISAbits.TRISA0 = 0;
        LATAbits.LATA0 = 1;
        for(i = 0; i < 10000; i++) Nop();

        //*********************************
        //Stop Charging the capacitor on RA0
        //*********************************
        TRISAbits.TRISA0 = 1;

        //****************************************
        //Enable the Ultra Low Power Wakeup module
        //and allow capacitor discharge
        //****************************************
        WDTCONbits.ULPEN = 1;
        WDTCONbits.ULPSINK = 1;

        //****************************************
        //Enable Interrupt for ULPW
        //****************************************
        //For Sleep
        //(assign the ULPOUT signal in the PPS module to a pin
        //which has also been assigned an interrupt capability,
        //such as INT1)
        INTCON3bits.INT1IF = 0;
        INTCON3bits.INT1IE = 1;

        //********************
        //Configure Sleep Mode
        //********************
        //For Sleep
        OSCCONbits.IDLEN = 0;

        //For Deep Sleep
        OSCCONbits.IDLEN = 0;  // enable deep sleep
        DSCONHbits.DSEN = 1;   // Note: must be set just before executing Sleep();
        //****************
        //Enter Sleep Mode
        //****************
        Sleep();
        // for sleep, execution will resume here
        // for deep sleep, execution will restart at reset vector (use WDTCONbits.DS to detect)
```

NOTES:

© 2011 Microchip Technology Inc.

5.0 RESET

The PIC18F46J50 family of devices differentiate among various kinds of Reset:

a) Power-on Reset (POR)
b) MCLR Reset during normal operation
c) MCLR Reset during power-managed modes
d) Watchdog Timer (WDT) Reset (during execution)
e) Configuration Mismatch (CM)
f) Brown-out Reset (BOR)
g) RESET Instruction
h) Stack Full Reset
i) Stack Underflow Reset
j) Deep Sleep Reset

This section discusses Resets generated by MCLR, POR and BOR, and covers the operation of the various start-up timers.

For information on WDT Resets, see **Section 27.2 "Watchdog Timer (WDT)"**. For Stack Reset events, see **Section 6.1.4.4 "Stack Full and Underflow Resets"** and for Deep Sleep mode, see **Section 4.6 "Deep Sleep Mode"**.

Figure 5-1 provides a simplified block diagram of the on-chip Reset circuit.

5.1 RCON Register

Device Reset events are tracked through the RCON register (Register 5-1). The lower five bits of the register indicate that a specific Reset event has occurred. In most cases, these bits can only be set by the event and must be cleared by the application after the event. The state of these flag bits, taken together, can be read to indicate the type of Reset that just occurred. This is described in more detail in **Section 5.7 "Reset State of Registers"**.

FIGURE 5-1: SIMPLIFIED BLOCK DIAGRAM OF ON-CHIP RESET CIRCUIT

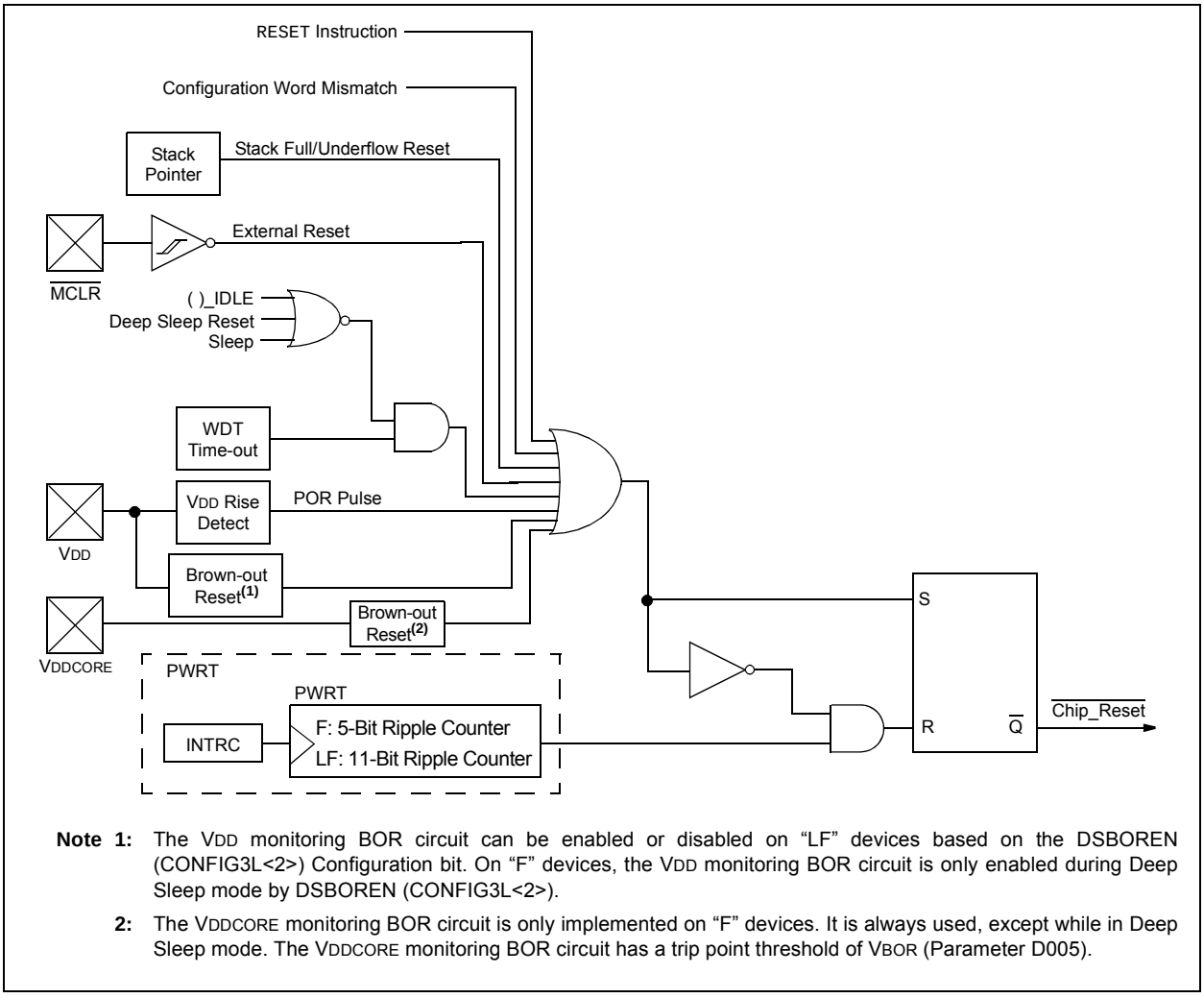

Note 1: The VDD monitoring BOR circuit can be enabled or disabled on "LF" devices based on the DSBOREN (CONFIG3L<2>) Configuration bit. On "F" devices, the VDD monitoring BOR circuit is only enabled during Deep Sleep mode by DSBOREN (CONFIG3L<2>).

2: The VDDCORE monitoring BOR circuit is only implemented on "F" devices. It is always used, except while in Deep Sleep mode. The VDDCORE monitoring BOR circuit has a trip point threshold of VBOR (Parameter D005).

REGISTER 5-1: RCON: RESET CONTROL REGISTER (ACCESS FD0h)

R/W-0	U-0	R/W-1	R/W-1	R-1	R-1	R/W-0	R/W-0
IPEN	—	$\overline{CM}$	$\overline{RI}$	$\overline{TO}$	$\overline{PD}$	$\overline{POR}$	$\overline{BOR}$
bit 7							bit 0

Legend:			
R = Readable bit	W = Writable bit	U = Unimplemented bit, read as '0'	
-n = Value at POR	'1' = Bit is set	'0' = Bit is cleared	x = Bit is unknown

bit 7 **IPEN:** Interrupt Priority Enable bit
1 = Enable priority levels on interrupts
0 = Disable priority levels on interrupts (PIC16CXXX Compatibility mode)

bit 6 **Unimplemented:** Read as '0'

bit 5 **$\overline{CM}$:** Configuration Mismatch Flag bit
1 = A Configuration Mismatch Reset has not occurred
0 = A Configuration Mismatch Reset has occurred (must be set in software after a Configuration Mismatch Reset occurs)

bit 4 **$\overline{RI}$:** RESET Instruction Flag bit
1 = The RESET instruction was not executed (set by firmware only)
0 = The RESET instruction was executed causing a device Reset (must be set in software after a Brown-out Reset occurs)

bit 3 **$\overline{TO}$:** Watchdog Time-out Flag bit
1 = Set by power-up, CLRWDT instruction or SLEEP instruction
0 = A WDT time-out occurred

bit 2 **$\overline{PD}$:** Power-Down Detection Flag bit
1 = Set by power-up or by the CLRWDT instruction
0 = Set by execution of the SLEEP instruction

bit 1 **$\overline{POR}$:** Power-on Reset Status bit
1 = A Power-on Reset has not occurred (set by firmware only)
0 = A Power-on Reset occurred (must be set in software after a Power-on Reset occurs)

bit 0 **$\overline{BOR}$:** Brown-out Reset Status bit
1 = A Brown-out Reset has not occurred (set by firmware only)
0 = A Brown-out Reset occurred (must be set in software after a Brown-out Reset occurs)

Note 1: It is recommended that the $\overline{POR}$ bit be set after a Power-on Reset has been detected, so that subsequent Power-on Resets may be detected.

2: If the on-chip voltage regulator is disabled, $\overline{BOR}$ remains '0' at all times. See **Section 5.4.1 "Detecting BOR"** for more information.

3: Brown-out Reset is said to have occurred when $\overline{BOR}$ is '0' and $\overline{POR}$ is '1' (assuming that $\overline{POR}$ was set to '1' by software immediately after a Power-on Reset).

© 2011 Microchip Technology Inc.

5.2 Master Clear ($\overline{MCLR}$)

The Master Clear Reset ($\overline{MCLR}$) pin provides a method for triggering a hard external Reset of the device. A Reset is generated by holding the pin low. PIC18 extended microcontroller devices have a noise filter in the $\overline{MCLR}$ Reset path, which detects and ignores small pulses.

The $\overline{MCLR}$ pin is not driven low by any internal Resets, including the WDT.

5.3 Power-on Reset (POR)

A POR condition is generated on-chip whenever VDD rises above a certain threshold. This allows the device to start in the initialized state when VDD is adequate for operation.

To take advantage of the POR circuitry, tie the $\overline{MCLR}$ pin through a resistor (1 kΩ to 10 kΩ) to VDD. This will eliminate external RC components usually needed to create a POR delay.

When the device starts normal operation (i.e., exits the Reset condition), device operating parameters (voltage, frequency, temperature, etc.) must be met to ensure operation. If these conditions are not met, the device must be held in Reset until the operating conditions are met.

POR events are captured by the $\overline{POR}$ bit (RCON<1>). The state of the bit is set to '0' whenever a Power-on Reset occurs; it does not change for any other Reset event. $\overline{POR}$ is not reset to '1' by any hardware event. To capture multiple events, the user manually resets the bit to '1' in software following any POR.

5.4 Brown-out Reset (BOR)

The "F" devices in the PIC18F46J50 family incorporate two types of BOR circuits: one which monitors VDDCORE and one which monitors VDD. Only one BOR circuit can be active at a time. When in normal Run mode, Idle or normal Sleep modes, the BOR circuit that monitors VDDCORE is active and will cause the device to be held in BOR if VDDCORE drops below VBOR (Parameter D005). Once VDDCORE rises back above VBOR, the device will be held in Reset until the expiration of the Power-up Timer, with period, TPWRT (Parameter 33).

During Deep Sleep operation, the on-chip core voltage regulator is disabled and VDDCORE is allowed to drop to VSS. If the Deep Sleep BOR circuit is enabled by the DSBOREN bit (CONFIG3L<2> = 1), it will monitor VDD. If VDD drops below the VDSBOR threshold, the device will be held in a Reset state similar to POR. All registers will be set back to their Power-on Reset values and the contents of the DSGPR0 and DSGPR1 holding registers will be lost. Additionally, if any I/O pins had been configured as outputs during Deep Sleep, these pins will be tri-stated and the device will no longer be held in Deep Sleep. Once the VDD voltage recovers back above the VDSBOR threshold, and once the core voltage regulator achieves a VDDCORE voltage above VBOR, the device will begin executing code again normally, but the DS bit in the WDTCON register will not be set. The device behavior will be similar to hard cycling all power to the device.

On "LF" devices (ex: PIC18LF46J50), the VDDCORE BOR circuit is always disabled because the internal core voltage regulator is disabled. Instead of monitoring VDDCORE, PIC18LF devices in this family can still use the VDD BOR circuit to monitor VDD excursions below the VDSBOR threshold. The VDD BOR circuit can be disabled by setting the DSBOREN bit = 0.

The VDD BOR circuit is enabled when DSBOREN = 1 on "LF" devices, or on "F" devices while in Deep Sleep with DSBOREN = 1. When enabled, the VDD BOR circuit is extremely low power (typ. 40nA) during normal operation, above ~2.3V on VDD. If VDD drops below this DSBOR arming level when the VDD BOR circuit is enabled, the device may begin to consume additional current (typ. 50 μA) as internal features of the circuit power-up. The higher current is necessary to achieve more accurate sensing of the VDD level. However, the device will not enter Reset until VDD falls below the VDSBOR threshold.

5.4.1 DETECTING BOR

The $\overline{BOR}$ bit always resets to '0' on any VDDCORE BOR or POR event. This makes it difficult to determine if a Brown-out Reset event has occurred just by reading the state of $\overline{BOR}$ alone. A more reliable method is to simultaneously check the state of both $\overline{POR}$ and $\overline{BOR}$. This assumes that the $\overline{POR}$ bit is reset to '1' in software immediately after any Power-on Reset event. If $\overline{BOR}$ is '0' while $\overline{POR}$ is '1', it can be reliably assumed that a Brown-out Reset event has occurred.

If the voltage regulator is disabled (LF device), the VDDCORE BOR functionality is disabled. In this case, the $\overline{BOR}$ bit cannot be used to determine a Brown-out Reset event. The $\overline{BOR}$ bit is still cleared by a Power-on Reset event.

5.5 Configuration Mismatch (CM)

The Configuration Mismatch (CM) Reset is designed to detect, and attempt to recover from, random memory corrupting events. These include Electrostatic Discharge (ESD) events, which can cause widespread single-bit changes throughout the device, and result in catastrophic failure.

In PIC18FXXJ Flash devices, the device Configuration registers (located in the configuration memory space) are continuously monitored during operation by comparing their values to complimentary shadow registers. If a mismatch is detected between the two sets of registers, a CM Reset automatically occurs. These events are captured by the $\overline{CM}$ bit (RCON<5>). The state of the bit is set to '0' whenever a CM event occurs; it does not change for any other Reset event.

A CM Reset behaves similarly to a $\overline{MCLR}$, RESET instruction, WDT time-out or Stack Event Resets. As with all hard and power Reset events, the device Configuration Words are reloaded from the Flash Configuration Words in program memory as the device restarts.

5.6 Power-up Timer (PWRT)

PIC18F46J50 family devices incorporate an on-chip PWRT to help regulate the POR process. The PWRT is always enabled. The main function is to ensure that the device voltage is stable before code is executed.

The Power-up Timer (PWRT) of the PIC18F46J50 family devices is a 5-bit counter which uses the INTRC source as the clock input. This yields an approximate time interval of 32 x 32 μs = 1 ms. While the PWRT is counting, the device is held in Reset.

The power-up time delay depends on the INTRC clock and will vary from chip-to-chip due to temperature and process variation. See DC Parameter 33 (TPWRT) for details.

5.6.1 TIME-OUT SEQUENCE

The PWRT time-out is invoked after the POR pulse has cleared. The total time-out will vary based on the status of the PWRT. Figure 5-2, Figure 5-3, Figure 5-4 and Figure 5-5 all depict time-out sequences on power-up with the PWRT.

Since the time-outs occur from the POR pulse, if $\overline{MCLR}$ is kept low long enough, the PWRT will expire. Bringing $\overline{MCLR}$ high will begin execution immediately if a clock source is available (Figure 5-4). This is useful for testing purposes, or to synchronize more than one PIC18F device operating in parallel.

FIGURE 5-2: TIME-OUT SEQUENCE ON POWER-UP ($\overline{MCLR}$ TIED TO VDD, VDD RISE < TPWRT)

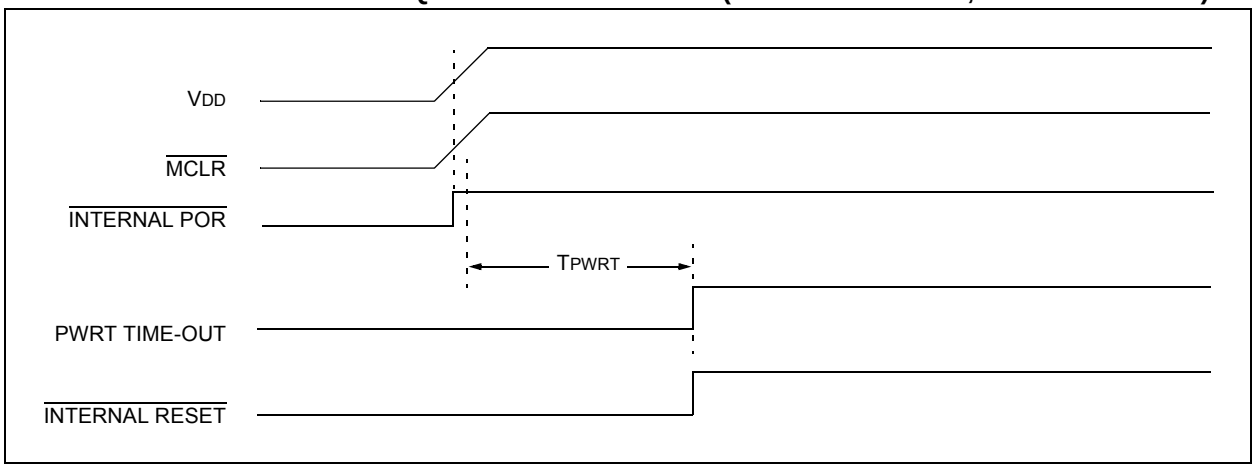

© 2011 Microchip Technology Inc.

FIGURE 5-3: TIME-OUT SEQUENCE ON POWER-UP (MCLR NOT TIED TO VDD): CASE 1

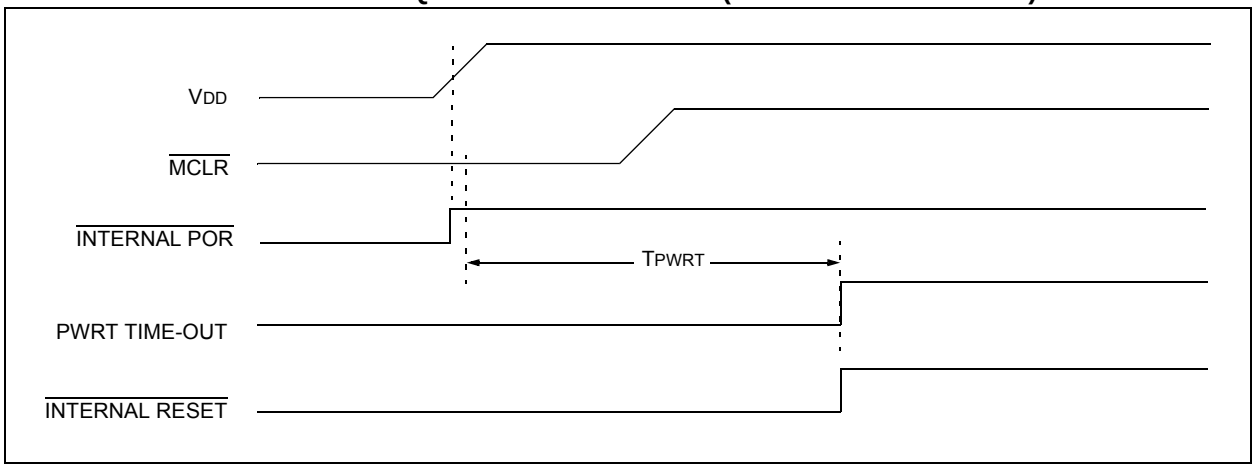

FIGURE 5-4: TIME-OUT SEQUENCE ON POWER-UP (MCLR NOT TIED TO VDD): CASE 2

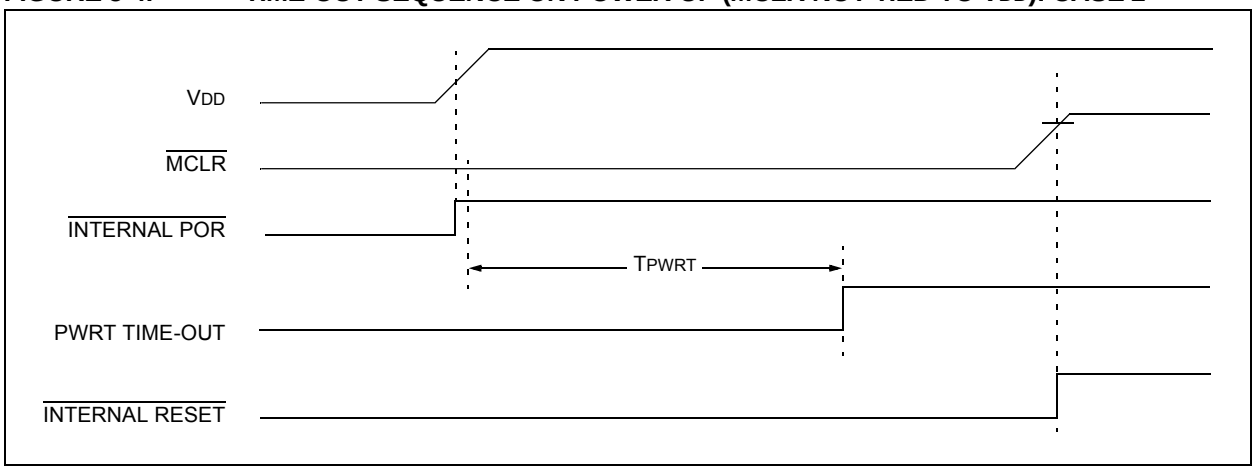

FIGURE 5-5: SLOW RISE TIME (MCLR TIED TO VDD, VDD RISE > TPWRT)

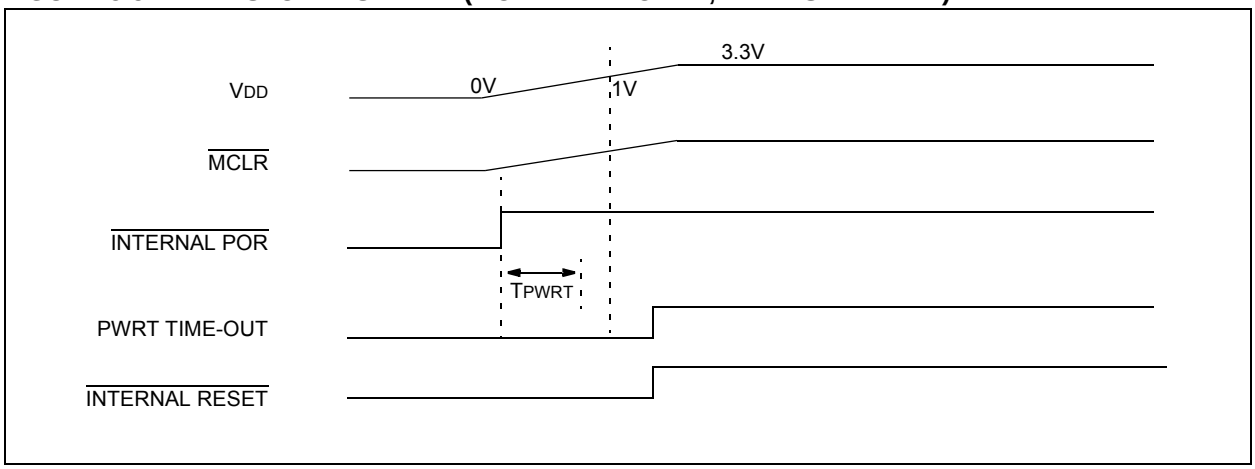

5.7 Reset State of Registers

Most registers are unaffected by a Reset. Their status is unknown on POR and unchanged by all other Resets. The other registers are forced to a "Reset state" depending on the type of Reset that occurred.

Most registers are not affected by a WDT wake-up, since this is viewed as the resumption of normal operation. Status bits from the RCON register ($\overline{CM}$, $\overline{RI}$, $\overline{TO}$, $\overline{PD}$, $\overline{POR}$ and $\overline{BOR}$) are set or cleared differently in different Reset situations, as indicated in Table 5-1. These bits are used in software to determine the nature of the Reset.

Table 5-2 describes the Reset states for all of the Special Function Registers. These are categorized by POR and BOR, $\overline{MCLR}$ and WDT Resets and WDT wake-ups.

TABLE 5-1: STATUS BITS, THEIR SIGNIFICANCE AND THE INITIALIZATION CONDITION FOR RCON REGISTER

Condition	Program Counter(1)	RCON Register						STKPTR Register	
		$\overline{CM}$	$\overline{RI}$	$\overline{TO}$	$\overline{PD}$	$\overline{POR}$	$\overline{BOR}$	STKFUL	STKUNF
Power-on Reset	0000h	1	1	1	1	0	0	0	0
RESET instruction	0000h	u	0	u	u	u	u	u	u
Brown-out Reset	0000h	1	1	1	1	u	0	u	u
Configuration Mismatch Reset	0000h	0	u	u	u	u	u	u	u
$\overline{MCLR}$ Reset during power-managed Run modes	0000h	u	u	1	u	u	u	u	u
$\overline{MCLR}$ Reset during power-managed Idle modes and Sleep mode	0000h	u	u	1	0	u	u	u	u
$\overline{MCLR}$ Reset during full-power execution	0000h	u	u	u	u	u	u	u	u
Stack Full Reset (STVREN = 1)	0000h	u	u	u	u	u	u	1	u
Stack Underflow Reset (STVREN = 1)	0000h	u	u	u	u	u	u	u	1
Stack Underflow Error (not an actual Reset, STVREN = 0)	0000h	u	u	u	u	u	u	u	1
WDT time-out during full-power or power-managed Run modes	0000h	u	u	0	u	u	u	u	u
WDT time-out during power-managed Idle or Sleep modes	PC + 2	u	u	0	0	u	u	u	u
Interrupt exit from power-managed modes	PC + 2	u	u	u	0	u	u	u	u

Legend: u = unchanged

Note 1: When the wake-up is due to an interrupt and the GIEH or GIEL bit is set, the PC is loaded with the interrupt vector (0008h or 0018h).

© 2011 Microchip Technology Inc.

TABLE 5-2: INITIALIZATION CONDITIONS FOR ALL REGISTERS

Register	Applicable Devices		Power-on Reset, Brown-out Reset, Wake From Deep Sleep	MCLR Resets WDT Reset RESET Instruction Stack Resets CM Resets	Wake-up via WDT or Interrupt
TOSU	PIC18F2XJ50	PIC18F4XJ50	---0 0000	---0 0000	---u uuuu(1)
TOSH	PIC18F2XJ50	PIC18F4XJ50	0000 0000	0000 0000	uuuu uuuu(1)
TOSL	PIC18F2XJ50	PIC18F4XJ50	0000 0000	0000 0000	uuuu uuuu(1)
STKPTR	PIC18F2XJ50	PIC18F4XJ50	00-0 0000	uu-0 0000	uu-u uuuu(1)
PCLATU	PIC18F2XJ50	PIC18F4XJ50	---0 0000	---0 0000	---u uuuu
PCLATH	PIC18F2XJ50	PIC18F4XJ50	0000 0000	0000 0000	uuuu uuuu
PCL	PIC18F2XJ50	PIC18F4XJ50	0000 0000	0000 0000	PC + 2(2)
TBLPTRU	PIC18F2XJ50	PIC18F4XJ50	--00 0000	--00 0000	--uu uuuu
TBLPTRH	PIC18F2XJ50	PIC18F4XJ50	0000 0000	0000 0000	uuuu uuuu
TBLPTRL	PIC18F2XJ50	PIC18F4XJ50	0000 0000	0000 0000	uuuu uuuu
TABLAT	PIC18F2XJ50	PIC18F4XJ50	0000 0000	0000 0000	uuuu uuuu
PRODH	PIC18F2XJ50	PIC18F4XJ50	xxxx xxxx	uuuu uuuu	uuuu uuuu
PRODL	PIC18F2XJ50	PIC18F4XJ50	xxxx xxxx	uuuu uuuu	uuuu uuuu
INTCON	PIC18F2XJ50	PIC18F4XJ50	0000 000x	0000 000u	uuuu uuuu(3)
INTCON2	PIC18F2XJ50	PIC18F4XJ50	1111 1111	1111 1111	uuuu uuuu(3)
INTCON3	PIC18F2XJ50	PIC18F4XJ50	1100 0000	1100 0000	uuuu uuuu(3)
INDF0	PIC18F2XJ50	PIC18F4XJ50	N/A	N/A	N/A
POSTINC0	PIC18F2XJ50	PIC18F4XJ50	N/A	N/A	N/A
POSTDEC0	PIC18F2XJ50	PIC18F4XJ50	N/A	N/A	N/A
PREINC0	PIC18F2XJ50	PIC18F4XJ50	N/A	N/A	N/A
PLUSW0	PIC18F2XJ50	PIC18F4XJ50	N/A	N/A	N/A
FSR0H	PIC18F2XJ50	PIC18F4XJ50	---- 0000	---- 0000	---- uuuu
FSR0L	PIC18F2XJ50	PIC18F4XJ50	xxxx xxxx	uuuu uuuu	uuuu uuuu
WREG	PIC18F2XJ50	PIC18F4XJ50	xxxx xxxx	uuuu uuuu	uuuu uuuu
INDF1	PIC18F2XJ50	PIC18F4XJ50	N/A	N/A	N/A
POSTINC1	PIC18F2XJ50	PIC18F4XJ50	N/A	N/A	N/A
POSTDEC1	PIC18F2XJ50	PIC18F4XJ50	N/A	N/A	N/A
PREINC1	PIC18F2XJ50	PIC18F4XJ50	N/A	N/A	N/A
PLUSW1	PIC18F2XJ50	PIC18F4XJ50	N/A	N/A	N/A
FSR1H	PIC18F2XJ50	PIC18F4XJ50	---- 0000	---- 0000	---- uuuu
FSR1L	PIC18F2XJ50	PIC18F4XJ50	xxxx xxxx	uuuu uuuu	uuuu uuuu
BSR	PIC18F2XJ50	PIC18F4XJ50	---- 0000	---- 0000	---- uuuu

Legend: u = unchanged, x = unknown, - = unimplemented bit, read as '0', q = value depends on condition.

Note 1: When the wake-up is due to an interrupt and the GIEH (and GIEL if low priority) bit(s) are set, the TOSU, TOSH and TOSL are updated with the current value of the PC. The STKPTR is modified to point to the next location in the hardware stack.

2: When the wake-up is due to an interrupt and the GIEL or GIEH bit is set, the PC is loaded with the interrupt vector (0008h or 0018h).

3: One or more bits in the INTCONx or PIRx registers will be affected (to cause wake-up).

4: See Table 5-1 for Reset value for specific condition.

5: Not implemented on PIC18F2XJ50 devices.

6: Not implemented on "LF" devices.

TABLE 5-2: INITIALIZATION CONDITIONS FOR ALL REGISTERS (CONTINUED)

Register	Applicable Devices		Power-on Reset, Brown-out Reset, Wake From Deep Sleep	$\overline{\text{MCLR}}$ Resets WDT Reset RESET Instruction Stack Resets CM Resets	Wake-up via WDT or Interrupt
INDF2	PIC18F2XJ50	PIC18F4XJ50	N/A	N/A	N/A
POSTINC2	PIC18F2XJ50	PIC18F4XJ50	N/A	N/A	N/A
POSTDEC2	PIC18F2XJ50	PIC18F4XJ50	N/A	N/A	N/A
PREINC2	PIC18F2XJ50	PIC18F4XJ50	N/A	N/A	N/A
PLUSW2	PIC18F2XJ50	PIC18F4XJ50	N/A	N/A	N/A
FSR2H	PIC18F2XJ50	PIC18F4XJ50	---- 0000	---- 0000	---- uuuu
FSR2L	PIC18F2XJ50	PIC18F4XJ50	xxxx xxxx	uuuu uuuu	uuuu uuuu
STATUS	PIC18F2XJ50	PIC18F4XJ50	---x xxxx	---u uuuu	---u uuuu
TMR0H	PIC18F2XJ50	PIC18F4XJ50	0000 0000	0000 0000	uuuu uuuu
TMR0L	PIC18F2XJ50	PIC18F4XJ50	xxxx xxxx	uuuu uuuu	uuuu uuuu
T0CON	PIC18F2XJ50	PIC18F4XJ50	1111 1111	1111 1111	uuuu uuuu
OSCCON	PIC18F2XJ50	PIC18F4XJ50	0110 q100	0110 q100	uuuu q1uu
CM1CON	PIC18F2XJ50	PIC18F4XJ50	0001 1111	0001 1111	uuuu uuuu
CM2CON	PIC18F2XJ50	PIC18F4XJ50	0001 1111	0001 1111	uuuu uuuu
RCON(4)	PIC18F2XJ50	PIC18F4XJ50	0-11 11qq	0-qq qquu	u-qq qquu
TMR1H	PIC18F2XJ50	PIC18F4XJ50	xxxx xxxx	uuuu uuuu	uuuu uuuu
TMR1L	PIC18F2XJ50	PIC18F4XJ50	xxxx xxxx	uuuu uuuu	uuuu uuuu
T1CON	PIC18F2XJ50	PIC18F4XJ50	0000 0000	uuuu uuuu	uuuu uuuu
TMR2	PIC18F2XJ50	PIC18F4XJ50	0000 0000	0000 0000	uuuu uuuu
PR2	PIC18F2XJ50	PIC18F4XJ50	1111 1111	1111 1111	uuuu uuuu
T2CON	PIC18F2XJ50	PIC18F4XJ50	-000 0000	-000 0000	-uuu uuuu
SSP1BUF	PIC18F2XJ50	PIC18F4XJ50	xxxx xxxx	uuuu uuuu	uuuu uuuu
SSP1ADD	PIC18F2XJ50	PIC18F4XJ50	0000 0000	0000 0000	uuuu uuuu
SSP1MSK	PIC18F2XJ50	PIC18F4XJ50	1111 1111	1111 1111	uuuu uuuu
SSP1STAT	PIC18F2XJ50	PIC18F4XJ50	0000 0000	0000 0000	uuuu uuuu
SSP1CON1	PIC18F2XJ50	PIC18F4XJ50	0000 0000	0000 0000	uuuu uuuu
SSP1CON2	PIC18F2XJ50	PIC18F4XJ50	0000 0000	0000 0000	uuuu uuuu
ADRESH	PIC18F2XJ50	PIC18F4XJ50	xxxx xxxx	uuuu uuuu	uuuu uuuu
ADRESL	PIC18F2XJ50	PIC18F4XJ50	xxxx xxxx	uuuu uuuu	uuuu uuuu
ADCON0	PIC18F2XJ50	PIC18F4XJ50	0000 0000	0000 0000	uuuu uuuu
ADCON1	PIC18F2XJ50	PIC18F4XJ50	0000 0000	0000 0000	uuuu uuuu
WDTCON	PIC18F2XJ50	PIC18F4XJ50	1qq- q000	1qq- 0000	uqq- uuuu

Legend: u = unchanged, x = unknown, - = unimplemented bit, read as '0', q = value depends on condition.

Note 1: When the wake-up is due to an interrupt and the GIEH (and GIEL if low priority) bit(s) are set, the TOSU, TOSH and TOSL are updated with the current value of the PC. The STKPTR is modified to point to the next location in the hardware stack.

2: When the wake-up is due to an interrupt and the GIEL or GIEH bit is set, the PC is loaded with the interrupt vector (0008h or 0018h).

3: One or more bits in the INTCONx or PIRx registers will be affected (to cause wake-up).

4: See Table 5-1 for Reset value for specific condition.

5: Not implemented on PIC18F2XJ50 devices.

6: Not implemented on "LF" devices.

© 2011 Microchip Technology Inc.

TABLE 5-2: INITIALIZATION CONDITIONS FOR ALL REGISTERS (CONTINUED)

Register	Applicable Devices		Power-on Reset, Brown-out Reset, Wake From Deep Sleep	$\overline{\text{MCLR}}$ Resets WDT Reset RESET Instruction Stack Resets CM Resets	Wake-up via WDT or Interrupt
PSTR1CON	PIC18F2XJ50	PIC18F4XJ50	00-0 0001	00-0 0001	uu-u uuuu
ECCP1AS	PIC18F2XJ50	PIC18F4XJ50	0000 0000	0000 0000	uuuu uuuu
ECCP1DEL	PIC18F2XJ50	PIC18F4XJ50	0000 0000	0000 0000	uuuu uuuu
CCPR1H	PIC18F2XJ50	PIC18F4XJ50	xxxx xxxx	uuuu uuuu	uuuu uuuu
CCPR1L	PIC18F2XJ50	PIC18F4XJ50	xxxx xxxx	uuuu uuuu	uuuu uuuu
CCP1CON	PIC18F2XJ50	PIC18F4XJ50	0000 0000	0000 0000	uuuu uuuu
PSTR2CON	PIC18F2XJ50	PIC18F4XJ50	00-0 0001	00-0 0001	uu-u uuuu
ECCP2AS	PIC18F2XJ50	PIC18F4XJ50	0000 0000	0000 0000	uuuu uuuu
ECCP2DEL	PIC18F2XJ50	PIC18F4XJ50	0000 0000	0000 0000	uuuu uuuu
CCPR2H	PIC18F2XJ50	PIC18F4XJ50	xxxx xxxx	uuuu uuuu	uuuu uuuu
CCPR2L	PIC18F2XJ50	PIC18F4XJ50	xxxx xxxx	uuuu uuuu	uuuu uuuu
CCP2CON	PIC18F2XJ50	PIC18F4XJ50	0000 0000	0000 0000	uuuu uuuu
CTMUCONH	PIC18F2XJ50	PIC18F4XJ50	0-00 000-	0-00 000-	u-uu uuu-
CTMUCONL	PIC18F2XJ50	PIC18F4XJ50	0000 00xx	0000 00xx	uuuu uuuu
CTMUICON	PIC18F2XJ50	PIC18F4XJ50	0000 0000	0000 0000	uuuu uuuu
SPBRG1	PIC18F2XJ50	PIC18F4XJ50	0000 0000	0000 0000	uuuu uuuu
RCREG1	PIC18F2XJ50	PIC18F4XJ50	0000 0000	0000 0000	uuuu uuuu
TXREG1	PIC18F2XJ50	PIC18F4XJ50	xxxx xxxx	0000 0000	uuuu uuuu
TXSTA1	PIC18F2XJ50	PIC18F4XJ50	0000 0010	0000 0010	uuuu uuuu
RCSTA1	PIC18F2XJ50	PIC18F4XJ50	0000 000x	0000 000x	uuuu uuuu
SPBRG2	PIC18F2XJ50	PIC18F4XJ50	0000 0000	0000 0000	uuuu uuuu
RCREG2	PIC18F2XJ50	PIC18F4XJ50	0000 0000	0000 0000	uuuu uuuu
TXREG2	PIC18F2XJ50	PIC18F4XJ50	0000 0000	0000 0000	uuuu uuuu
TXSTA2	PIC18F2XJ50	PIC18F4XJ50	0000 0010	0000 0010	uuuu uuuu
EECON2	PIC18F2XJ50	PIC18F4XJ50	---- ----	---- ----	---- ----
EECON1	PIC18F2XJ50	PIC18F4XJ50	--00 x00-	--00 q00-	--00 u00-
IPR3	PIC18F2XJ50	PIC18F4XJ50	1111 1111	1111 1111	uuuu uuuu
PIR3	PIC18F2XJ50	PIC18F4XJ50	0000 0000	0000 0000	uuuu uuuu(3)
PIE3	PIC18F2XJ50	PIC18F4XJ50	0000 0000	0000 0000	uuuu uuuu
IPR2	PIC18F2XJ50	PIC18F4XJ50	1111 1111	1111 1111	uuuu uuuu
PIR2	PIC18F2XJ50	PIC18F4XJ50	0000 0000	0000 0000	uuuu uuuu(3)
PIE2	PIC18F2XJ50	PIC18F4XJ50	0000 0000	0000 0000	uuuu uuuu

Legend: u = unchanged, x = unknown, - = unimplemented bit, read as '0', q = value depends on condition.

Note 1: When the wake-up is due to an interrupt and the GIEH (and GIEL if low priority) bit(s) are set, the TOSU, TOSH and TOSL are updated with the current value of the PC. The STKPTR is modified to point to the next location in the hardware stack.

2: When the wake-up is due to an interrupt and the GIEL or GIEH bit is set, the PC is loaded with the interrupt vector (0008h or 0018h).

3: One or more bits in the INTCONx or PIRx registers will be affected (to cause wake-up).

4: See Table 5-1 for Reset value for specific condition.

5: Not implemented on PIC18F2XJ50 devices.

6: Not implemented on "LF" devices.

TABLE 5-2: INITIALIZATION CONDITIONS FOR ALL REGISTERS (CONTINUED)

Register	Applicable Devices		Power-on Reset, Brown-out Reset, Wake From Deep Sleep	MCLR Resets WDT Reset RESET Instruction Stack Resets CM Resets	Wake-up via WDT or Interrupt
IPR1	PIC18F2XJ50	PIC18F4XJ50	1111 1111	1111 1111	uuuu uuuu
PIR1	PIC18F2XJ50	PIC18F4XJ50	0000 0000	0000 0000	uuuu uuuu(3)
PIE1	PIC18F2XJ50	PIC18F4XJ50	0000 0000	0000 0000	uuuu uuuu
RCSTA2	PIC18F2XJ50	PIC18F4XJ50	0000 000x	0000 000x	uuuu uuuu
OSCTUNE	PIC18F2XJ50	PIC18F4XJ50	0000 0000	0000 0000	uuuu uuuu
T1GCON	PIC18F2XJ50	PIC18F4XJ50	0000 0x00	0000 0x00	uuuu uxuu
RTCVALH	PIC18F2XJ50	PIC18F4XJ50	0xxx xxxx	0uuu uuuu	0uuu uuuu
RTCVALL	PIC18F2XJ50	PIC18F4XJ50	0xxx xxxx	0uuu uuuu	0uuu uuuu
T3GCON	PIC18F2XJ50	PIC18F4XJ50	0000 0x00	uuuu uxuu	uuuu uxuu
TRISE(5)	—	PIC18F4XJ50	---- -111	---- -111	---- -uuu
TRISD(5)	—	PIC18F4XJ50	1111 1111	1111 1111	uuuu uuuu
TRISC	PIC18F2XJ50	PIC18F4XJ50	11-- -111	11-- -111	uu-- -uuu
TRISB	PIC18F2XJ50	PIC18F4XJ50	1111 1111	1111 1111	uuuu uuuu
TRISA	PIC18F2XJ50	PIC18F4XJ50	111- 1111	111- 1111	uuu- uuuu
ALRMCFG	PIC18F2XJ50	PIC18F4XJ50	0000 0000	uuuu uuuu	uuuu uuuu
ALRMRPT	PIC18F2XJ50	PIC18F4XJ50	0000 0000	uuuu uuuu	uuuu uuuu
ALRMVALH	PIC18F2XJ50	PIC18F4XJ50	xxxx xxxx	uuuu uuuu	uuuu uuuu
ALRMVALL	PIC18F2XJ50	PIC18F4XJ50	xxxx xxxx	uuuu uuuu	uuuu uuuu
LATE(5)	—	PIC18F4XJ50	---- -xxx	---- -uuu	---- -uuu
LATD(5)	—	PIC18F4XJ50	xxxx xxxx	uuuu uuuu	uuuu uuuu
LATC	PIC18F2XJ50	PIC18F4XJ50	xx-- -xxx	uu-- -uuu	uu-- -uuu
LATB	PIC18F2XJ50	PIC18F4XJ50	xxxx xxxx	uuuu uuuu	uuuu uuuu
LATA	PIC18F2XJ50	PIC18F4XJ50	xxx- xxxx	uuu- uuuu	uuu- uuuu
DMACON1	PIC18F2XJ50	PIC18F4XJ50	0000 0000	0000 0000	uuuu uuuu
DMACON2	PIC18F2XJ50	PIC18F4XJ50	0000 0000	0000 0000	uuuu uuuu
HLVDCON	PIC18F2XJ50	PIC18F4XJ50	0000 0000	0000 0000	uuuu uuuu
PORTE(5)	—	PIC18F4XJ50	00-- -xxx	uu-- -uuu	uu-- -uuu
PORTD(5)	—	PIC18F4XJ50	xxxx xxxx	uuuu uuuu	uuuu uuuu
PORTC	PIC18F2XJ50	PIC18F4XJ50	xxxx -xxx	uuuu -uuu	uuuu -uuu
PORTB	PIC18F2XJ50	PIC18F4XJ50	xxxx xxxx	uuuu uuuu	uuuu uuuu
PORTA	PIC18F2XJ50	PIC18F4XJ50	xxx- xxxx	uuu- uuuu	uuu- uuuu
SPBRGH1	PIC18F2XJ50	PIC18F4XJ50	0000 0000	0000 0000	uuuu uuuu

Legend: u = unchanged, x = unknown, - = unimplemented bit, read as '0', q = value depends on condition.

Note 1: When the wake-up is due to an interrupt and the GIEH (and GIEL if low priority) bit(s) are set, the TOSU, TOSH and TOSL are updated with the current value of the PC. The STKPTR is modified to point to the next location in the hardware stack.

2: When the wake-up is due to an interrupt and the GIEL or GIEH bit is set, the PC is loaded with the interrupt vector (0008h or 0018h).

3: One or more bits in the INTCONx or PIRx registers will be affected (to cause wake-up).

4: See Table 5-1 for Reset value for specific condition.

5: Not implemented on PIC18F2XJ50 devices.

6: Not implemented on "LF" devices.

© 2011 Microchip Technology Inc.

TABLE 5-2: INITIALIZATION CONDITIONS FOR ALL REGISTERS (CONTINUED)

Register	Applicable Devices		Power-on Reset, Brown-out Reset, Wake From Deep Sleep	$\overline{\text{MCLR}}$ Resets WDT Reset RESET Instruction Stack Resets CM Resets	Wake-up via WDT or Interrupt
BAUDCON1	PIC18F2XJ50	PIC18F4XJ50	0100 0-00	0100 0-00	uuuu u-uu
SPBRGH2	PIC18F2XJ50	PIC18F4XJ50	0000 0000	0000 0000	uuuu uuuu
BAUDCON2	PIC18F2XJ50	PIC18F4XJ50	0100 0-00	0100 0-00	uuuu u-uu
TMR3H	PIC18F2XJ50	PIC18F4XJ50	xxxx xxxx	uuuu uuuu	uuuu uuuu
TMR3L	PIC18F2XJ50	PIC18F4XJ50	xxxx xxxx	uuuu uuuu	uuuu uuuu
T3CON	PIC18F2XJ50	PIC18F4XJ50	0000 0000	uuuu uuuu	uuuu uuuu
TMR4	PIC18F2XJ50	PIC18F4XJ50	0000 0000	uuuu uuuu	uuuu uuuu
PR4	PIC18F2XJ50	PIC18F4XJ50	1111 1111	1111 1111	uuuu uuuu
T4CON	PIC18F2XJ50	PIC18F4XJ50	-000 0000	-000 0000	-uuu uuuu
SSP2BUF	PIC18F2XJ50	PIC18F4XJ50	xxxx xxxx	uuuu uuuu	uuuu uuuu
SSP2ADD	PIC18F2XJ50	PIC18F4XJ50	0000 0000	0000 0000	uuuu uuuu
SSP2MSK	PIC18F2XJ50	PIC18F4XJ50	0000 0000	0000 0000	uuuu uuuu
SSP2STAT	PIC18F2XJ50	PIC18F4XJ50	1111 1111	1111 1111	uuuu uuuu
SSP2CON1	PIC18F2XJ50	PIC18F4XJ50	0000 0000	0000 0000	uuuu uuuu
SSP2CON2	PIC18F2XJ50	PIC18F4XJ50	0000 0000	0000 0000	uuuu uuuu
CMSTAT	PIC18F2XJ50	PIC18F4XJ50	---- --11	---- --11	---- --uu
PMADDRH(5)	—	PIC18F4XJ50	-000 0000	-000 0000	-uuu uuuu
PMDOUT1H(5)	—	PIC18F4XJ50	0000 0000	0000 0000	uuuu uuuu
PMADDRL(5)	—	PIC18F4XJ50	0000 0000	0000 0000	uuuu uuuu
PMDOUT1L(5)	—	PIC18F4XJ50	0000 0000	0000 0000	uuuu uuuu
PMDIN1H(5)	—	PIC18F4XJ50	0000 0000	0000 0000	uuuu uuuu
PMDIN1L(5)	—	PIC18F4XJ50	0000 0000	0000 0000	uuuu uuuu
TXADDRL	PIC18F2XJ50	PIC18F4XJ50	0000 0000	0000 0000	uuuu uuuu
TXADDRH	PIC18F2XJ50	PIC18F4XJ50	---- 0000	---- 0000	---- uuuu
RXADDRL	PIC18F2XJ50	PIC18F4XJ50	0000 0000	0000 0000	uuuu uuuu
RXADDRH	PIC18F2XJ50	PIC18F4XJ50	---- 0000	---- 0000	---- uuuu
DMABCL	PIC18F2XJ50	PIC18F4XJ50	0000 0000	0000 0000	uuuu uuuu
DMABCH	PIC18F2XJ50	PIC18F4XJ50	---- --00	---- --00	---- --uu
UCON	PIC18F2XJ50	PIC18F4XJ50	-0x0 000-	-0x0 000-	-uuu uuu-
USTAT	PIC18F2XJ50	PIC18F4XJ50	-xxx xxx-	-xxx xxx-	-uuu uuu-
UEIR	PIC18F2XJ50	PIC18F4XJ50	0--0 0000	0--0 0000	u--u uuuu
UIR	PIC18F2XJ50	PIC18F4XJ50	-000 0000	-000 0000	-uuu uuuu

Legend: u = unchanged, x = unknown, - = unimplemented bit, read as '0', q = value depends on condition.

Note 1: When the wake-up is due to an interrupt and the GIEH (and GIEL if low priority) bit(s) are set, the TOSU, TOSH and TOSL are updated with the current value of the PC. The STKPTR is modified to point to the next location in the hardware stack.

2: When the wake-up is due to an interrupt and the GIEL or GIEH bit is set, the PC is loaded with the interrupt vector (0008h or 0018h).

3: One or more bits in the INTCONx or PIRx registers will be affected (to cause wake-up).

4: See Table 5-1 for Reset value for specific condition.

5: Not implemented on PIC18F2XJ50 devices.

6: Not implemented on "LF" devices.

TABLE 5-2: INITIALIZATION CONDITIONS FOR ALL REGISTERS (CONTINUED)

Register	Applicable Devices		Power-on Reset, Brown-out Reset, Wake From Deep Sleep	MCLR Resets WDT Reset RESET Instruction Stack Resets CM Resets	Wake-up via WDT or Interrupt
UFRMH	PIC18F2XJ50	PIC18F4XJ50	---- -xxx	---- -xxx	---- -uuu
UFRML	PIC18F2XJ50	PIC18F4XJ50	xxxx xxxx	xxxxx xxxx	uuuu uuuu
PMCONH(5)	—	PIC18F4XJ50	0--0 0000	0--0 0000	u--u uuuu
PMCONL(5)	—	PIC18F4XJ50	000- 0000	000- 0000	uuu- uuuu
PMMODEH(5)	—	PIC18F4XJ50	0000 0000	0000 0000	uuuu uuuu
PMMODEL(5)	—	PIC18F4XJ50	0000 0000	0000 0000	uuuu uuuu
PMDOUT2H(5)	—	PIC18F4XJ50	0000 0000	0000 0000	uuuu uuuu
PMDOUT2L(5)	—	PIC18F4XJ50	0000 0000	0000 0000	uuuu uuuu
PMDIN2H(5)	—	PIC18F4XJ50	0000 0000	0000 0000	uuuu uuuu
PMDIN2L(5)	—	PIC18F4XJ50	0000 0000	0000 0000	uuuu uuuu
PMEH(5)	—	PIC18F4XJ50	0000 0000	0000 0000	uuuu uuuu
PMEL(5)	—	PIC18F4XJ50	0000 0000	0000 0000	uuuu uuuu
PMSTATH	—	PIC18F4XJ50	00-- 0000	00-- 0000	uu-- uuuu
PMSTATL	—	PIC18F4XJ50	10-- 1111	10-- 1111	uu-- uuuu
CVRCON	PIC18F2XJ50	PIC18F4XJ50	0000 0000	0000 0000	uuuu uuuu
TCLKCON	PIC18F2XJ50	PIC18F4XJ50	---0 --00	---0 --uu	---u --uu
DSGPR1(6)	PIC18F2XJ50	PIC18F4XJ50	uuuu uuuu	uuuu uuuu	uuuu uuuu
DSGPR0(6)	PIC18F2XJ50	PIC18F4XJ50	uuuu uuuu	uuuu uuuu	uuuu uuuu
DSCONH(6)	PIC18F2XJ50	PIC18F4XJ50	0--- -000	0--- -uuu	u--- -uuu
DSCONL(6)	PIC18F2XJ50	PIC18F4XJ50	---- -000	---- -u00	---- -uuu
DSWAKEH(6)	PIC18F2XJ50	PIC18F4XJ50	---- ---0	---- ---0	---- ---u
DSWAKEL(6)	PIC18F2XJ50	PIC18F4XJ50	0-00 00-1	0-00 00-0	u-uu uu-u
ANCON1	PIC18F2XJ50	PIC18F4XJ50	00-0 0000	00-0 0000	uu-u uuuu
ANCON0	PIC18F2XJ50	PIC18F4XJ50	0000 0000	0000 0000	uuuu uuuu
ODCON1	PIC18F2XJ50	PIC18F4XJ50	---- --00	---- --uu	---- --uu
ODCON2	PIC18F2XJ50	PIC18F4XJ50	---- --00	---- --uu	---- --uu
ODCON3	PIC18F2XJ50	PIC18F4XJ50	---- --00	---- --uu	---- --uu
RTCCFG	PIC18F2XJ50	PIC18F4XJ50	0-00 0000	u-uu uuuu	u-uu uuuu
RTCCAL	PIC18F2XJ50	PIC18F4XJ50	0000 0000	uuuu uuuu	uuuu uuuu
REFOCON	PIC18F2XJ50	PIC18F4XJ50	0-00 0000	0-00 0000	u-uu uuuu
PADCFG1	PIC18F2XJ50	PIC18F4XJ50	---- -000	---- -000	---- -uuu
UCFG	PIC18F2XJ50	PIC18F4XJ50	00-0 0000	00-0 0000	uu-u uuuu

Legend: u = unchanged, x = unknown, - = unimplemented bit, read as '0', q = value depends on condition.

Note 1: When the wake-up is due to an interrupt and the GIEH (and GIEL if low priority) bit(s) are set, the TOSU, TOSH and TOSL are updated with the current value of the PC. The STKPTR is modified to point to the next location in the hardware stack.

2: When the wake-up is due to an interrupt and the GIEL or GIEH bit is set, the PC is loaded with the interrupt vector (0008h or 0018h).

3: One or more bits in the INTCONx or PIRx registers will be affected (to cause wake-up).

4: See Table 5-1 for Reset value for specific condition.

5: Not implemented on PIC18F2XJ50 devices.

6: Not implemented on "LF" devices.

© 2011 Microchip Technology Inc.

TABLE 5-2: INITIALIZATION CONDITIONS FOR ALL REGISTERS (CONTINUED)

Register	Applicable Devices		Power-on Reset, Brown-out Reset, Wake From Deep Sleep	$\overline{\text{MCLR}}$ Resets WDT Reset RESET Instruction Stack Resets CM Resets	Wake-up via WDT or Interrupt
UADDR	PIC18F2XJ50	PIC18F4XJ50	-000 0000	-uuu uuuu	-uuu uuuu
UEIE	PIC18F2XJ50	PIC18F4XJ50	0--0 0000	0--0 0000	u--u uuuu
UIE	PIC18F2XJ50	PIC18F4XJ50	-000 0000	-000 0000	-uuu uuuu
UEP15	PIC18F2XJ50	PIC18F4XJ50	---0 0000	---0 0000	---u uuuu
UEP14	PIC18F2XJ50	PIC18F4XJ50	---0 0000	---0 0000	---u uuuu
UEP13	PIC18F2XJ50	PIC18F4XJ50	---0 0000	---0 0000	---u uuuu
UEP12	PIC18F2XJ50	PIC18F4XJ50	---0 0000	---0 0000	---u uuuu
UEP11	PIC18F2XJ50	PIC18F4XJ50	---0 0000	---0 0000	---u uuuu
UEP10	PIC18F2XJ50	PIC18F4XJ50	---0 0000	---0 0000	---u uuuu
UEP9	PIC18F2XJ50	PIC18F4XJ50	---0 0000	---0 0000	---u uuuu
UEP8	PIC18F2XJ50	PIC18F4XJ50	---0 0000	---0 0000	---u uuuu
UEP7	PIC18F2XJ50	PIC18F4XJ50	---0 0000	---0 0000	---u uuuu
UEP6	PIC18F2XJ50	PIC18F4XJ50	---0 0000	---0 0000	---u uuuu
UEP5	PIC18F2XJ50	PIC18F4XJ50	---0 0000	---0 0000	---u uuuu
UEP4	PIC18F2XJ50	PIC18F4XJ50	---0 0000	---0 0000	---u uuuu
UEP3	PIC18F2XJ50	PIC18F4XJ50	---0 0000	---0 0000	---u uuuu
UEP2	PIC18F2XJ50	PIC18F4XJ50	---0 0000	---0 0000	---u uuuu
UEP1	PIC18F2XJ50	PIC18F4XJ50	---0 0000	---0 0000	---u uuuu
UEP0	PIC18F2XJ50	PIC18F4XJ50	---0 0000	---0 0000	---u uuuu
PPSCON	PIC18F2XJ50	PIC18F4XJ50	---- ---0	---- ---0	---- ---u
RPINR24	PIC18F2XJ50	PIC18F4XJ50	---1 1111	---1 1111	---u uuuu
RPINR23	PIC18F2XJ50	PIC18F4XJ50	---1 1111	---1 1111	---u uuuu
RPINR22	PIC18F2XJ50	PIC18F4XJ50	---1 1111	---1 1111	---u uuuu
RPINR21	PIC18F2XJ50	PIC18F4XJ50	---1 1111	---1 1111	---u uuuu
RPINR17	PIC18F2XJ50	PIC18F4XJ50	---1 1111	---1 1111	---u uuuu
RPINR16	PIC18F2XJ50	PIC18F4XJ50	---1 1111	---1 1111	---u uuuu
RPINR13	PIC18F2XJ50	PIC18F4XJ50	---1 1111	---1 1111	---u uuuu
RPINR12	PIC18F2XJ50	PIC18F4XJ50	---1 1111	---1 1111	---u uuuu
RPINR8	PIC18F2XJ50	PIC18F4XJ50	---1 1111	---1 1111	---u uuuu
RPINR7	PIC18F2XJ50	PIC18F4XJ50	---1 1111	---1 1111	---u uuuu
RPINR6	PIC18F2XJ50	PIC18F4XJ50	---1 1111	---1 1111	---u uuuu
RPINR4	PIC18F2XJ50	PIC18F4XJ50	---1 1111	---1 1111	---u uuuu

Legend: u = unchanged, x = unknown, - = unimplemented bit, read as '0', q = value depends on condition.

Note 1: When the wake-up is due to an interrupt and the GIEH (and GIEL if low priority) bit(s) are set, the TOSU, TOSH and TOSL are updated with the current value of the PC. The STKPTR is modified to point to the next location in the hardware stack.

2: When the wake-up is due to an interrupt and the GIEL or GIEH bit is set, the PC is loaded with the interrupt vector (0008h or 0018h).

3: One or more bits in the INTCONx or PIRx registers will be affected (to cause wake-up).

4: See Table 5-1 for Reset value for specific condition.

5: Not implemented on PIC18F2XJ50 devices.

6: Not implemented on "LF" devices.

TABLE 5-2: INITIALIZATION CONDITIONS FOR ALL REGISTERS (CONTINUED)

Register	Applicable Devices		Power-on Reset, Brown-out Reset, Wake From Deep Sleep	$\overline{\text{MCLR}}$ Resets WDT Reset RESET Instruction Stack Resets CM Resets	Wake-up via WDT or Interrupt
RPINR3	PIC18F2XJ50	PIC18F4XJ50	---1 1111	---1 1111	---u uuuu
RPINR2	PIC18F2XJ50	PIC18F4XJ50	---1 1111	---1 1111	---u uuuu
RPINR1	PIC18F2XJ50	PIC18F4XJ50	---1 1111	---1 1111	---u uuuu
RPOR24	PIC18F2XJ50	PIC18F4XJ50	---0 0000	---0 0000	---u uuuu
RPOR23	PIC18F2XJ50	PIC18F4XJ50	---0 0000	---0 0000	---u uuuu
RPOR22	PIC18F2XJ50	PIC18F4XJ50	---0 0000	---0 0000	---u uuuu
RPOR21	PIC18F2XJ50	PIC18F4XJ50	---0 0000	---0 0000	---u uuuu
RPOR20	PIC18F2XJ50	PIC18F4XJ50	---0 0000	---0 0000	---u uuuu
RPOR19	PIC18F2XJ50	PIC18F4XJ50	---0 0000	---0 0000	---u uuuu
RPOR18	PIC18F2XJ50	PIC18F4XJ50	---0 0000	---0 0000	---u uuuu
RPOR17	PIC18F2XJ50	PIC18F4XJ50	---0 0000	---0 0000	---u uuuu
RPOR13	PIC18F2XJ50	PIC18F4XJ50	---0 0000	---0 0000	---u uuuu
RPOR12	PIC18F2XJ50	PIC18F4XJ50	---0 0000	---0 0000	---u uuuu
RPOR11	PIC18F2XJ50	PIC18F4XJ50	---0 0000	---0 0000	---u uuuu
RPOR10	PIC18F2XJ50	PIC18F4XJ50	---0 0000	---0 0000	---u uuuu
RPOR9	PIC18F2XJ50	PIC18F4XJ50	---0 0000	---0 0000	---u uuuu
RPOR8	PIC18F2XJ50	PIC18F4XJ50	---0 0000	---0 0000	---u uuuu
RPOR7	PIC18F2XJ50	PIC18F4XJ50	---0 0000	---0 0000	---u uuuu
RPOR6	PIC18F2XJ50	PIC18F4XJ50	---0 0000	---0 0000	---u uuuu
RPOR5	PIC18F2XJ50	PIC18F4XJ50	---0 0000	---0 0000	---u uuuu
RPOR4	PIC18F2XJ50	PIC18F4XJ50	---0 0000	---0 0000	---u uuuu
RPOR3	PIC18F2XJ50	PIC18F4XJ50	---0 0000	---0 0000	---u uuuu
RPOR2	PIC18F2XJ50	PIC18F4XJ50	---0 0000	---0 0000	---u uuuu
RPOR1	PIC18F2XJ50	PIC18F4XJ50	---0 0000	---0 0000	---u uuuu
RPOR0	PIC18F2XJ50	PIC18F4XJ50	---0 0000	---0 0000	---u uuuu

Legend: u = unchanged, x = unknown, - = unimplemented bit, read as '0', q = value depends on condition.

Note 1: When the wake-up is due to an interrupt and the GIEH (and GIEL if low priority) bit(s) are set, the TOSU, TOSH and TOSL are updated with the current value of the PC. The STKPTR is modified to point to the next location in the hardware stack.

2: When the wake-up is due to an interrupt and the GIEL or GIEH bit is set, the PC is loaded with the interrupt vector (0008h or 0018h).

3: One or more bits in the INTCONx or PIRx registers will be affected (to cause wake-up).

4: See Table 5-1 for Reset value for specific condition.

5: Not implemented on PIC18F2XJ50 devices.

6: Not implemented on "LF" devices.

© 2011 Microchip Technology Inc.

6.0 MEMORY ORGANIZATION

There are two types of memory in PIC18 Flash microcontrollers:

- Program Memory
- Data RAM

As Harvard architecture devices, the data and program memories use separate busses; this allows for concurrent access of the two memory spaces.

Section 7.0 "Flash Program Memory" provides additional information on the operation of the Flash program memory.

6.1 Program Memory Organization

PIC18 microcontrollers implement a 21-bit Program Counter, which is capable of addressing a 2-Mbyte program memory space. Accessing a location between the upper boundary of the physically implemented memory and the 2-Mbyte address returns all '0's (a NOP instruction).

The PIC18F46J50 family offers a range of on-chip Flash program memory sizes, from 16 Kbytes (up to 8,192 single-word instructions) to 64 Kbytes (32,768 single-word instructions).

Figure 6-1 provides the program memory maps for individual family devices.

FIGURE 6-1: MEMORY MAPS FOR PIC18F46J50 FAMILY DEVICES

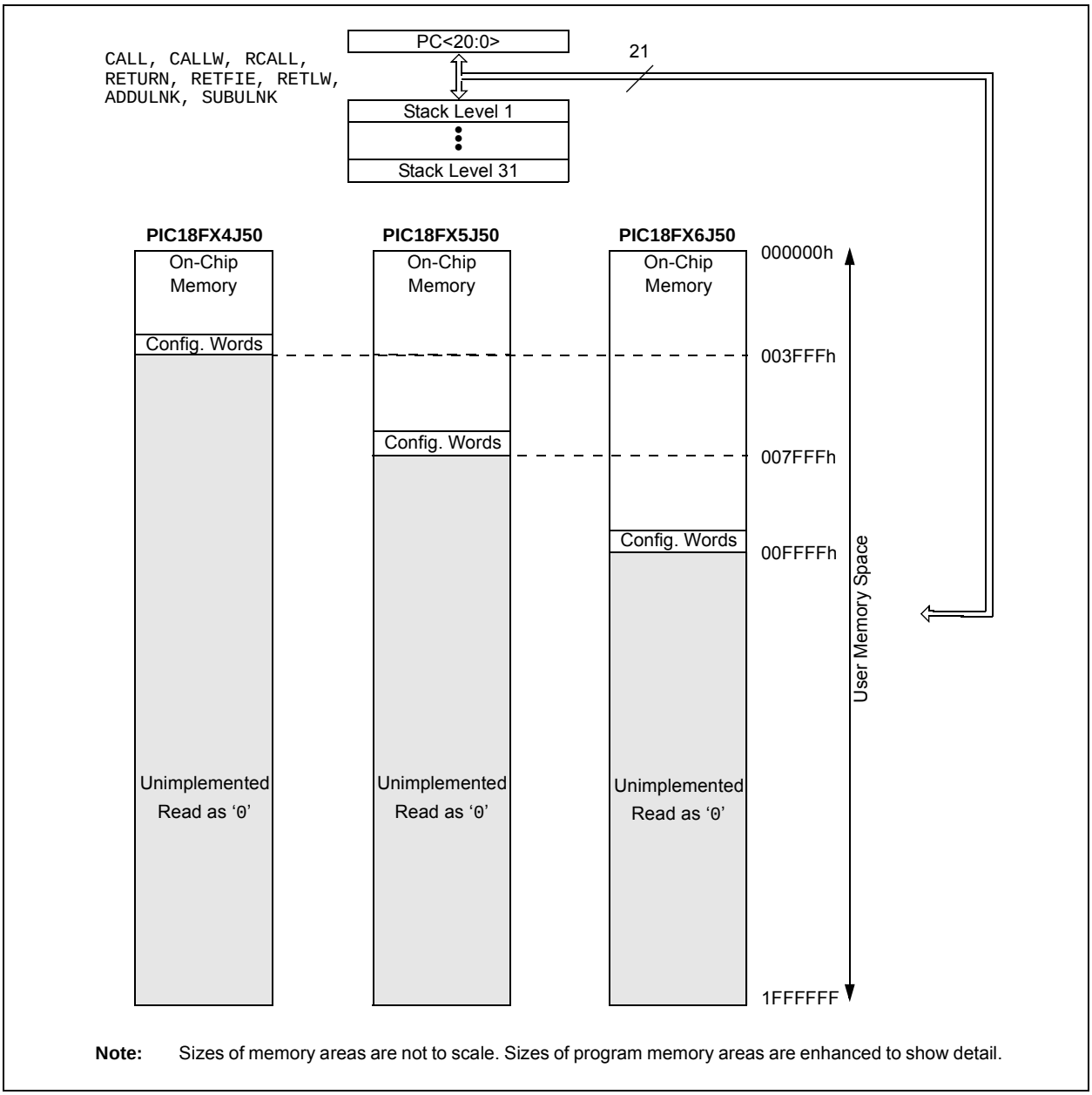

Note: Sizes of memory areas are not to scale. Sizes of program memory areas are enhanced to show detail.

6.1.1 HARD MEMORY VECTORS

All PIC18 devices have a total of three hard-coded return vectors in their program memory space. The Reset vector address is the default value to which the Program Counter returns on all device Resets; it is located at 0000h.

PIC18 devices also have two interrupt vector addresses for handling high-priority and low-priority interrupts. The high-priority interrupt vector is located at 0008h and the low-priority interrupt vector at 0018h. Figure 6-2 provides their locations in relation to the program memory map.

FIGURE 6-2: HARD VECTOR AND CONFIGURATION WORD LOCATIONS FOR PIC18F46J50 FAMILY DEVICES

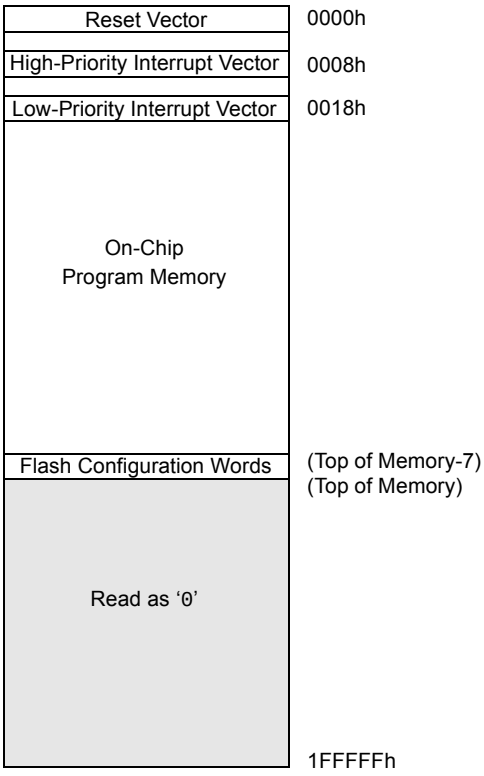

Legend: (Top of Memory) represents upper boundary of on-chip program memory space (see Figure 6-1 for device-specific values). Shaded area represents unimplemented memory. Areas are not shown to scale.

6.1.2 FLASH CONFIGURATION WORDS

Because PIC18F46J50 family devices do not have persistent configuration memory, the top four words of on-chip program memory are reserved for configuration information. On Reset, the configuration information is copied into the Configuration registers.

The Configuration Words are stored in their program memory location in numerical order, starting with the lower byte of CONFIG1 at the lowest address and ending with the upper byte of CONFIG4.

Table 6-1 provides the actual addresses of the Flash Configuration Word for devices in the PIC18F46J50 family. Figure 6-2 displays their location in the memory map with other memory vectors.

Additional details on the device Configuration Words are provided in **Section 27.1 "Configuration Bits"**.

TABLE 6-1: FLASH CONFIGURATION WORD FOR PIC18F46J50 FAMILY DEVICES

Device	Program Memory (Kbytes)	Configuration Word Addresses
PIC18F24J50	16	3FF8h to 3FFFh
PIC18F44J50		
PIC18F25J50	32	7FF8h to 7FFFh
PIC18F45J50		
PIC18F26J50	64	FFF8h to FFFFh
PIC18F46J50		

© 2011 Microchip Technology Inc.

6.1.3 PROGRAM COUNTER

The Program Counter (PC) specifies the address of the instruction to fetch for execution. The PC is 21 bits wide and is contained in three separate 8-bit registers. The low byte, known as the PCL register, is both readable and writable. The high byte, or PCH register, contains the PC<15:8> bits; it is not directly readable or writable. Updates to the PCH register are performed through the PCLATH register. The upper byte is called PCU. This register contains the PC<20:16> bits; it is also not directly readable or writable. Updates to the PCU register are performed through the PCLATU register.

The contents of PCLATH and PCLATU are transferred to the Program Counter by any operation that writes to PCL. Similarly, the upper 2 bytes of the Program Counter are transferred to PCLATH and PCLATU by an operation that reads PCL. This is useful for computed offsets to the PC (see **Section 6.1.6.1 "Computed GOTO"**).

The PC addresses bytes in the program memory. To prevent the PC from becoming misaligned with word instructions, the Least Significant bit (LSb) of PCL is fixed to a value of '0'. The PC increments by two to address sequential instructions in the program memory.

The CALL, RCALL, GOTO and program branch instructions write to the Program Counter directly. For these instructions, the contents of PCLATH and PCLATU are not transferred to the Program Counter.

6.1.4 RETURN ADDRESS STACK

The return address stack allows any combination of up to 31 program calls and interrupts to occur. The PC is pushed onto the stack when a CALL or RCALL instruction is executed, or an interrupt is Acknowledged. The PC value is pulled off of the stack on a RETURN, RETLW or a RETFIE instruction (and on ADDULNK and SUBULNK instructions if the extended instruction set is enabled). PCLATU and PCLATH are not affected by any of the RETURN or CALL instructions.

The stack operates as a 31-word by 21-bit RAM and a 5-bit Stack Pointer (SP), STKPTR. The stack space is not part of either program or data space. The Stack Pointer is readable and writable and the address on the top of the stack is readable and writable through the Top-of-Stack Special Function Registers (SFRs). Data can also be pushed to, or popped from the stack, using these registers.

A CALL type instruction causes a push onto the stack. The Stack Pointer is first incremented and the location pointed to by the Stack Pointer is written with the contents of the PC (already pointing to the instruction following the CALL). A RETURN type instruction causes a pop from the stack. The contents of the location pointed to by the STKPTR are transferred to the PC and then the Stack Pointer is decremented.

The Stack Pointer is initialized to '00000' after all Resets. There is no RAM associated with the location corresponding to a Stack Pointer value of '00000'; this is only a Reset value. Status bits indicate if the stack is full, has overflowed or has underflowed.

6.1.4.1 Top-of-Stack Access

Only the top of the return address stack (TOS) is readable and writable. A set of three registers, TOSU:TOSH:TOSL, holds the contents of the stack location pointed to by the STKPTR register (Figure 6-3). This allows users to implement a software stack if necessary. After a CALL, RCALL or interrupt (and ADDULNK and SUBULNK instructions if the extended instruction set is enabled), the software can read the pushed value by reading the TOSU:TOSH:TOSL registers. These values can be placed on a user-defined software stack. At return time, the software can return these values to TOSU:TOSH:TOSL and do a return.

The user must disable the Global Interrupt Enable bits while accessing the stack to prevent inadvertent stack corruption.

FIGURE 6-3: RETURN ADDRESS STACK AND ASSOCIATED REGISTERS

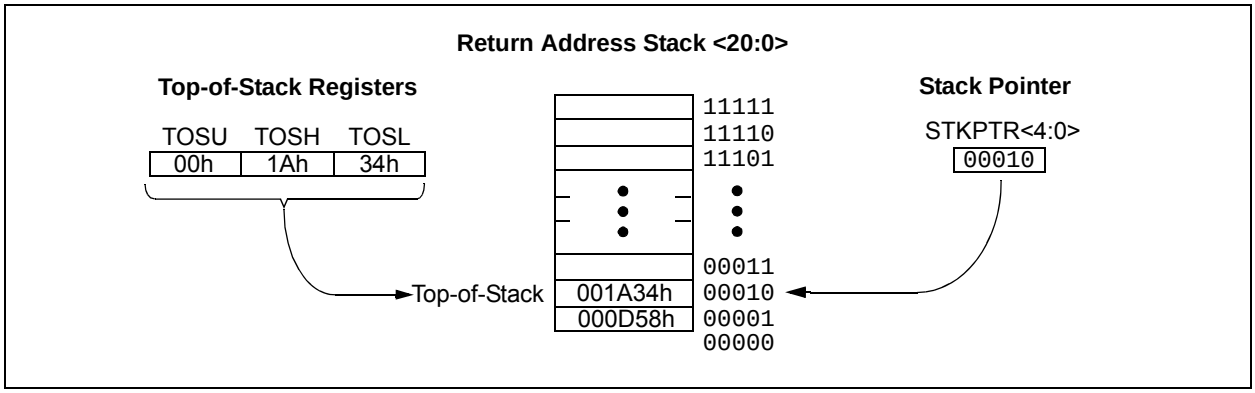

6.1.4.2 Return Stack Pointer (STKPTR)

The STKPTR register (Register 6-1) contains the Stack Pointer value, the STKFUL (Stack Full) and the STKUNF (Stack Underflow) status bits. The value of the Stack Pointer can be 0 through 31. The Stack Pointer increments before values are pushed onto the stack and decrements after values are popped off the stack. On Reset, the Stack Pointer value will be zero. The user may read and write the Stack Pointer value. This feature can be used by a Real-Time Operating System (RTOS) for return stack maintenance.

After the PC is pushed onto the stack 31 times (without popping any values off the stack), the STKFUL bit is set. The STKFUL bit is cleared by software or by a Power-on Reset (POR).

The action that takes place when the stack becomes full depends on the state of the Stack Overflow Reset Enable (STVREN) Configuration bit.

Refer to **Section 27.1 "Configuration Bits"** for device Configuration bits' description.

If STVREN is set (default), the 31st push will push the (PC + 2) value onto the stack, set the STKFUL bit and reset the device. The STKFUL bit will remain set and the Stack Pointer will be set to zero.

If STVREN is cleared, the STKFUL bit will be set on the 31st push and the Stack Pointer will increment to 31. Any additional pushes will not overwrite the 31st push and the STKPTR will remain at 31.

When the stack has been popped enough times to unload the stack, the next pop will return zero to the PC and set the STKUNF bit, while the Stack Pointer remains at zero. The STKUNF bit will remain set until cleared by software or until a POR occurs.

Note:	Returning a value of zero to the PC on an underflow has the effect of vectoring the program to the Reset vector, where the stack conditions can be verified and appropriate actions can be taken. This is not the same as a Reset, as the contents of the SFRs are not affected.

6.1.4.3 PUSH and POP Instructions

Since the Top-of-Stack is readable and writable, the ability to push values onto the stack and pull values off the stack, without disturbing normal program execution is necessary. The PIC18 instruction set includes two instructions, PUSH and POP, that permit the TOS to be manipulated under software control. TOSU, TOSH and TOSL can be modified to place data or a return address on the stack.

The PUSH instruction places the current PC value onto the stack. This increments the Stack Pointer and loads the current PC value onto the stack.

The POP instruction discards the current TOS by decrementing the Stack Pointer. The previous value pushed onto the stack then becomes the TOS value.

REGISTER 6-1: STKPTR: STACK POINTER REGISTER (ACCESS FFCh)

R/C-0	R/C-0	U-0	R/W-0	R/W-0	R/W-0	R/W-0	R/W-0
STKFUL(1)	STKUNF(1)	—	SP4	SP3	SP2	SP1	SP0
bit 7							bit 0

Legend:	C = Clearable bit		
R = Readable bit	W = Writable bit	U = Unimplemented bit, read as '0'	
-n = Value at POR	'1' = Bit is set	'0' = Bit is cleared	x = Bit is unknown

bit 7 **STKFUL:** Stack Full Flag bit(1)
1 = Stack became full or overflowed
0 = Stack has not become full or overflowed

bit 6 **STKUNF:** Stack Underflow Flag bit(1)
1 = Stack underflow occurred
0 = Stack underflow did not occur

bit 5 **Unimplemented:** Read as '0'

bit 4-0 **SP<4:0>:** Stack Pointer Location bits

Note 1: Bits 7 and 6 are cleared by user software or by a POR.

© 2011 Microchip Technology Inc.

6.1.4.4 Stack Full and Underflow Resets

Device Resets on stack overflow and stack underflow conditions are enabled by setting the STVREN bit in Configuration Register 1L. When STVREN is set, a full or underflow condition sets the appropriate STKFUL or STKUNF bit and then causes a device Reset. When STVREN is cleared, a full or underflow condition sets the appropriate STKFUL or STKUNF bit, but does not cause a device Reset. The STKFUL or STKUNF bits are cleared by the user software or a POR.

6.1.5 FAST REGISTER STACK (FRS)

A Fast Register Stack (FRS) is provided for the STATUS, WREG and BSR registers to provide a "fast return" option for interrupts. This stack is only one level deep and is neither readable nor writable. It is loaded with the current value of the corresponding register when the processor vectors for an interrupt. All interrupt sources push values into the Stack registers. The values in the registers are then loaded back into the working registers if the RETFIE, FAST instruction is used to return from the interrupt.

If both low-priority and high-priority interrupts are enabled, the Stack registers cannot be used reliably to return from low-priority interrupts. If a high-priority interrupt occurs while servicing a low-priority interrupt, the Stack register values stored by the low-priority interrupt will be overwritten. In these cases, users must save the key registers in software during a low-priority interrupt.

If interrupt priority is not used, all interrupts may use the FRS for returns from interrupt. If no interrupts are used, the FRS can be used to restore the STATUS, WREG and BSR registers at the end of a subroutine call. To use the Fast Register Stack for a subroutine call, a CALL label, FAST instruction must be executed to save the STATUS, WREG and BSR registers to the Fast Register Stack. A RETURN, FAST instruction is then executed to restore these registers from the FRS.

Example 6-1 provides a source code example that uses the FRS during a subroutine call and return.

EXAMPLE 6-1: FAST REGISTER STACK CODE EXAMPLE

```
CALL SUB1, FAST    ;STATUS, WREG, BSR
                   ;SAVED IN FAST REGISTER
                   ;STACK
       •
       •

SUB1   •
       •
   RETURN FAST     ;RESTORE VALUES SAVED
                   ;IN FAST REGISTER STACK
```

6.1.6 LOOK-UP TABLES IN PROGRAM MEMORY

There may be programming situations that require the creation of data structures or look-up tables in program memory. For PIC18 devices, look-up tables can be implemented in two ways:

- Computed GOTO
- Table Reads

6.1.6.1 Computed GOTO

A computed GOTO is accomplished by adding an offset to the PC. An example is shown in Example 6-2.

A look-up table can be formed with an ADDWF PCL instruction and a group of RETLW nn instructions. The W register is loaded with an offset into the table before executing a call to that table. The first instruction of the called routine is the ADDWF PCL instruction. The next executed instruction will be one of the RETLW nn instructions that returns the value, 'nn', to the calling function.

The offset value (in WREG) specifies the number of bytes that the PC should advance and should be multiples of 2 (LSb = 0).

In this method, only one byte may be stored in each instruction location, room on the return address stack is required.

EXAMPLE 6-2: COMPUTED GOTO USING AN OFFSET VALUE

```
        MOVF    OFFSET, W
        CALL    TABLE
ORG     nn00h
TABLE   ADDWF   PCL
        RETLW   nnh
        RETLW   nnh
        RETLW   nnh
        .
        .
        .
```

6.1.6.2 Table Reads

A better method of storing data in program memory allows two bytes to be stored in each instruction location.

Look-up table data may be stored two bytes per program word while programming. The Table Pointer (TBLPTR) specifies the byte address, and the Table Latch (TABLAT) contains the data that is read from the program memory. Data is transferred from program memory one byte at a time.

Table read operation is discussed further in **Section 7.1 "Table Reads and Table Writes"**.

6.2 PIC18 Instruction Cycle

6.2.1 CLOCKING SCHEME

The microcontroller clock input, whether from an internal or external source, is internally divided by four to generate four non-overlapping quadrature clocks (Q1, Q2, Q3 and Q4). Internally, the PC is incremented on every Q1; the instruction is fetched from the program memory and latched into the Instruction Register (IR) during Q4. The instruction is decoded and executed during the following Q1 through Q4. Figure 6-4 illustrates the clocks and instruction execution flow.

6.2.2 INSTRUCTION FLOW/PIPELINING

An “Instruction Cycle” consists of four Q cycles, Q1 through Q4. The instruction fetch and execute are pipelined in such a manner that a fetch takes one instruction cycle, while the decode and execute takes another instruction cycle. However, due to the pipelining, each instruction effectively executes in one cycle. If an instruction causes the PC to change (e.g., GOTO), then two cycles are required to complete the instruction (Example 6-3).

A fetch cycle begins with the PC incrementing in Q1.

In the execution cycle, the fetched instruction is latched into the IR in the Q1 cycle. This instruction is then decoded and executed during the Q2, Q3 and Q4 cycles. Data memory is read during Q2 (operand read) and written during Q4 (destination write).

FIGURE 6-4: CLOCK/INSTRUCTION CYCLE

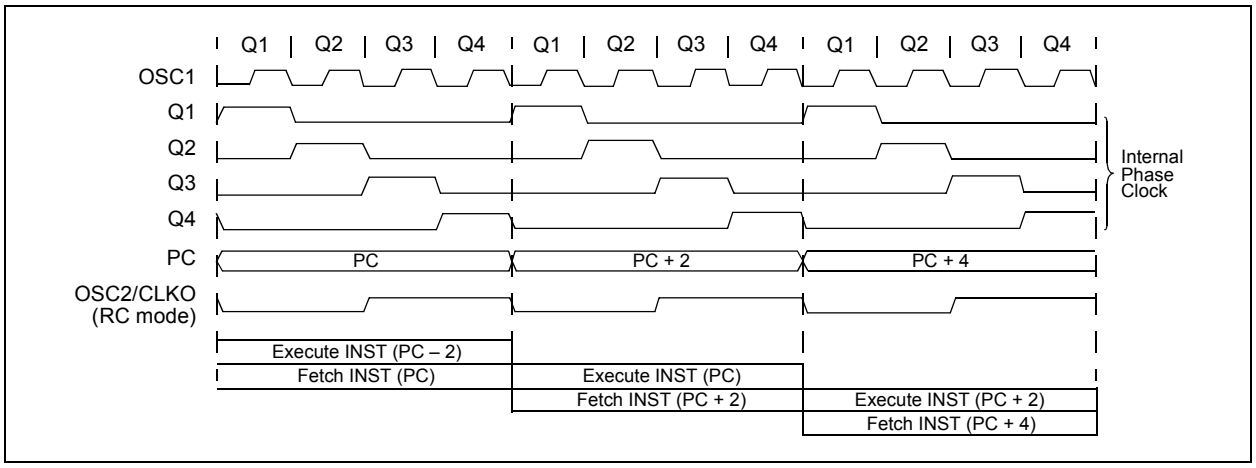

EXAMPLE 6-3: INSTRUCTION PIPELINE FLOW

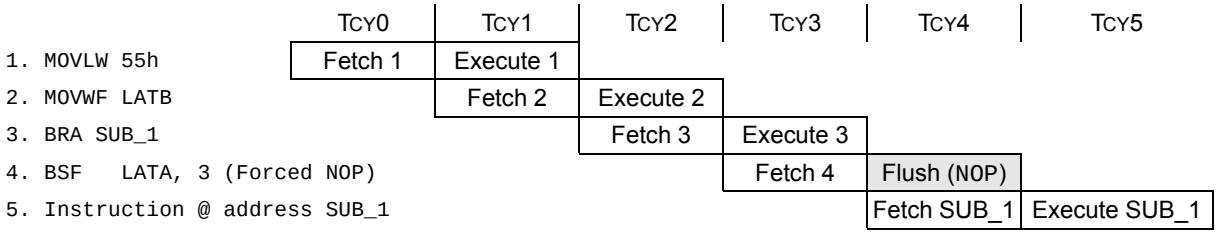

Note: All instructions are single-cycle, except for any program branches. These take two cycles since the fetch instruction is “flushed” from the pipeline while the new instruction is being fetched and then executed.

© 2011 Microchip Technology Inc.

6.2.3 INSTRUCTIONS IN PROGRAM MEMORY

The program memory is addressed in bytes. Instructions are stored as 2 bytes or 4 bytes in program memory. The Least Significant Byte (LSB) of an instruction word is always stored in a program memory location with an even address (LSB = 0). To maintain alignment with instruction boundaries, the PC increments in steps of 2 and the LSB will always read '0' (see **Section 6.1.3 "Program Counter"**).

Figure 6-5 provides an example of how instruction words are stored in the program memory.

The CALL and GOTO instructions have the absolute program memory address embedded into the instruction. Since instructions are always stored on word boundaries, the data contained in the instruction is a word address. The word address is written to PC<20:1>, which accesses the desired byte address in program memory. Instruction #2 in Figure 6-5 displays how the instruction, GOTO 0006h, is encoded in the program memory. Program branch instructions, which encode a relative address offset, operate in the same manner. The offset value stored in a branch instruction represents the number of single-word instructions that the PC will be offset by. **Section 28.0 "Instruction Set Summary"** provides further details of the instruction set.

FIGURE 6-5: INSTRUCTIONS IN PROGRAM MEMORY

Program Memory Byte Locations →

			LSB = 1	LSB = 0	Word Address ↓
					000000h
					000002h
					000004h
					000006h
Instruction 1:	MOVLW	055h	0Fh	55h	000008h
Instruction 2:	GOTO	0006h	EFh	03h	00000Ah
			F0h	00h	00000Ch
Instruction 3:	MOVFF	123h, 456h	C1h	23h	00000Eh
			F4h	56h	000010h
					000012h
					000014h

6.2.4 TWO-WORD INSTRUCTIONS

The standard PIC18 instruction set has four, two-word instructions: CALL, MOVFF, GOTO and LSFR. In all cases, the second word of the instructions always has '1111' as its four Most Significant bits (MSbs); the other 12 bits are literal data, usually a data memory address.

The use of '1111' in the 4 MSbs of an instruction specifies a special form of NOP. If the instruction is executed in proper sequence immediately after the first word, the data in the second word is accessed and used by the instruction sequence. If the first word is skipped for some reason and the second word is executed by itself, a NOP is executed instead. This is necessary for cases when the two-word instruction is preceded by a conditional instruction that changes the PC. Example 6-4 illustrates how this works.

Note: See **Section 6.5 "Program Memory and the Extended Instruction Set"** for information on two-word instructions in the extended instruction set.

EXAMPLE 6-4: TWO-WORD INSTRUCTIONS

CASE 1:

Object Code	Source Code		
0110 0110 0000 0000	TSTFSZ	REG1	; is RAM location 0?
1100 0001 0010 0011	MOVFF	REG1, REG2	; No, skip this word
1111 0100 0101 0110			; Execute this word as a NOP
0010 0100 0000 0000	ADDWF	REG3	; continue code

CASE 2:

Object Code	Source Code		
0110 0110 0000 0000	TSTFSZ	REG1	; is RAM location 0?
1100 0001 0010 0011	MOVFF	REG1, REG2	; Yes, execute this word
1111 0100 0101 0110			; 2nd word of instruction
0010 0100 0000 0000	ADDWF	REG3	; continue code

6.3 Data Memory Organization

Note: The operation of some aspects of data memory are changed when the PIC18 extended instruction set is enabled. See **Section 6.6 "Data Memory and the Extended Instruction Set"** for more information.

The data memory in PIC18 devices is implemented as static RAM. Each register in the data memory has a 12-bit address, allowing up to 4096 bytes of data memory. The memory space is divided into as many as 16 banks that contain 256 bytes each. The PIC18F46J50 family implements all available banks and provides 3.8 Kbytes of data memory available to the user. Figure 6-6 provides the data memory organization for the devices.

The data memory contains Special Function Registers (SFRs) and General Purpose Registers (GPRs). The SFRs are used for control and status of the controller and peripheral functions, while GPRs are used for data storage and scratchpad operations in the user's application. Any read of an unimplemented location will read as '0's.

The instruction set and architecture allow operations across all banks. The entire data memory may be accessed by Direct, Indirect or Indexed Addressing modes. Addressing modes are discussed later in this section.

To ensure that commonly used registers (select SFRs and select GPRs) can be accessed in a single cycle, PIC18 devices implement an Access Bank. This is a 256-byte memory space that provides fast access to select SFRs and the lower portion of GPR Bank 0 without using the BSR. **Section 6.3.3 "Access Bank"** provides a detailed description of the Access RAM.

6.3.1 USB RAM

All 3.8 Kbytes of the GPRs implemented on the PIC18F46J50 family devices can be accessed simultaneously by both the microcontroller core and the Serial Interface Engine (SIE) of the USB module. The SIE uses a dedicated USB DMA engine to store any incoming data packets (OUT/SETUP) directly into main system data memory.

For IN data packets, the SIE can directly read the contents of general purpose SRAM and use it to create USB data packets that are sent to the host.

Note: IN and OUT are always from the USB host's perspective.

SRAM Bank 4 (400h-4FFh) is unique. In addition to being accessible by both the microcontroller core and the USB module, the SIE uses a portion of Bank 4 as Special Function Registers (SFRs). These SFRs compose the Buffer Descriptor Table (BDT).

When the USB module is enabled, the BDT registers are used to control the behavior of the USB DMA operation for each of the enabled endpoints. The exact number of SRAM locations that are used for the BDT depends on how many endpoints are enabled and what USB Ping-Pong mode is used. For more details, see **Section 22.3 "USB RAM"**.

When the USB module is disabled, these SRAM locations behave like any other GPR location. When the USB module is disabled, these locations may be used for any general purpose.

6.3.2 BANK SELECT REGISTER

Large areas of data memory require an efficient addressing scheme to make rapid access to any address possible. Ideally, this means that an entire address does not need to be provided for each read or write operation. For PIC18 devices, this is accomplished with a RAM banking scheme. This divides the memory space into 16 contiguous banks of 256 bytes. Depending on the instruction, each location can be addressed directly by its full 12-bit address, or an 8-bit low-order address and a 4-bit Bank Pointer.

Most instructions in the PIC18 instruction set make use of the Bank Pointer, known as the Bank Select Register (BSR). This SFR holds the 4 MSbs of a location's address; the instruction itself includes the 8 LSbs. Only the four lower bits of the BSR are implemented (BSR<3:0>). The upper four bits are unused; they will always read '0' and cannot be written to. The BSR can be loaded directly by using the MOVLB instruction.

The value of the BSR indicates the bank in data memory. The 8 bits in the instruction show the location in the bank and can be thought of as an offset from the bank's lower boundary. The relationship between the BSR's value and the bank division in data memory is illustrated in Figure 6-7.

Since, up to 16 registers may share the same low-order address, the user must always be careful to ensure that the proper bank is selected before performing a data read or write. For example, writing what should be program data to an 8-bit address of F9h while the BSR is 0Fh, will end up resetting the PC.

While any bank can be selected, only those banks that are actually implemented can be read or written to. Writes to unimplemented banks are ignored, while reads from unimplemented banks will return '0's. Even so, the STATUS register will still be affected as if the operation was successful. The data memory map in Figure 6-6 indicates which banks are implemented.

In the core PIC18 instruction set, only the MOVFF instruction fully specifies the 12-bit address of the source and target registers. This instruction ignores the BSR completely when it executes. All other instructions include only the low-order address as an operand and must use either the BSR or the Access Bank to locate their target registers.

© 2011 Microchip Technology Inc.

FIGURE 6-6: DATA MEMORY MAP FOR PIC18F46J50 FAMILY DEVICES

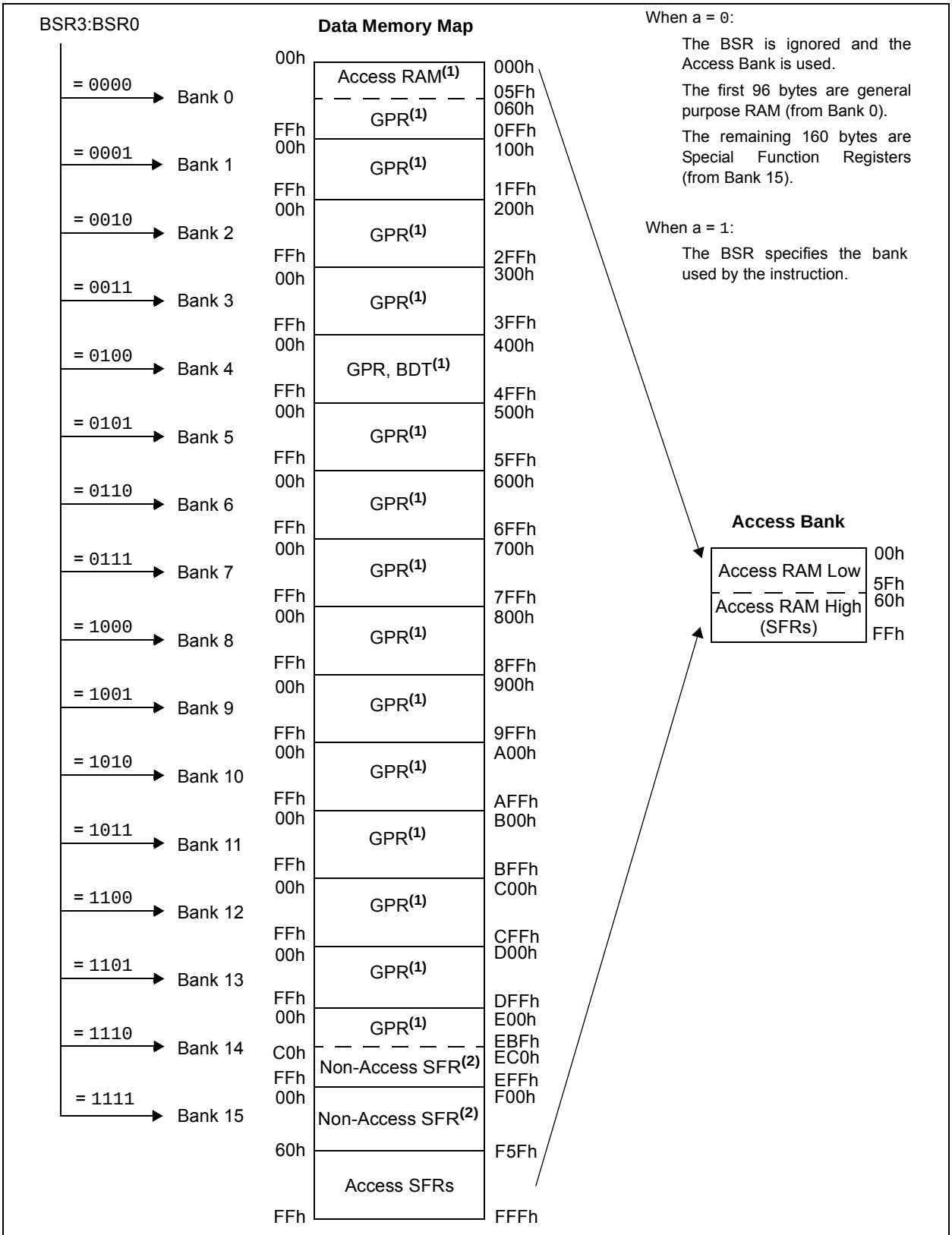

Note 1: These banks also serve as RAM buffers for USB operation. See **Section 6.3.1 "USB RAM"** for more information.

2: Addresses, EC0h through F5Fh, are not part of the Access Bank. Either the BANKED or the MOVFF instruction should be used to access these SFRs.

FIGURE 6-7: USE OF THE BANK SELECT REGISTER (DIRECT ADDRESSING)

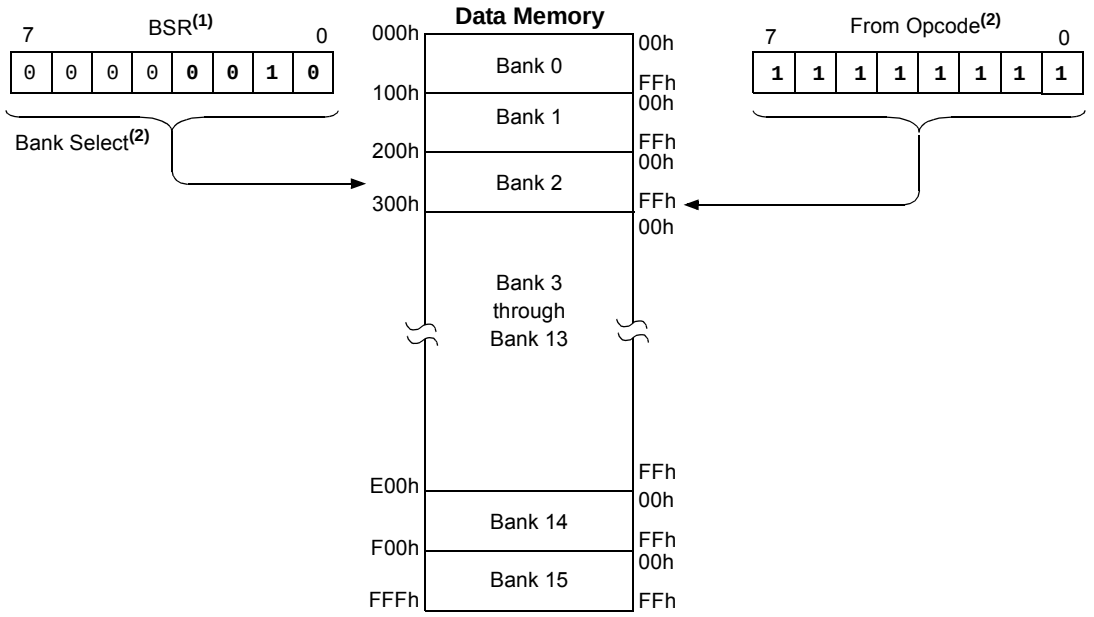

Note 1: The Access RAM bit of the instruction can be used to force an override of the selected bank (BSR<3:0>) to the registers of the Access Bank.

2: The MOVFF instruction embeds the entire 12-bit address in the instruction.

6.3.3 ACCESS BANK

While the use of the BSR with an embedded 8-bit address allows users to address the entire range of data memory, it also means that the user must always ensure that the correct bank is selected. Otherwise, data may be read from or written to the wrong location. This can be disastrous if a GPR is the intended target of an operation, but an SFR is written to instead. Verifying and/or changing the BSR for each read or write to data memory can become very inefficient.

To streamline access for the most commonly used data memory locations, the data memory is configured with an Access Bank, which allows users to access a mapped block of memory without specifying a BSR. The Access Bank consists of the first 96 bytes of memory (00h-5Fh) in Bank 0 and the last 160 bytes of memory (60h-FFh) in Bank 15. The lower half is known as the Access RAM and is composed of GPRs. The upper half is where the device's SFRs are mapped. These two areas are mapped contiguously in the Access Bank and can be addressed in a linear fashion by an 8-bit address (Figure 6-6).

The Access Bank is used by core PIC18 instructions that include the Access RAM bit (the 'a' parameter in the instruction). When 'a' is equal to '1', the instruction uses the BSR and the 8-bit address included in the opcode for the data memory address. When 'a' is '0', however, the instruction is forced to use the Access Bank address map; the current value of the BSR is ignored entirely.

Using this "forced" addressing allows the instruction to operate on a data address in a single cycle without updating the BSR first. For 8-bit addresses of 60h and above, this means that users can evaluate and operate on SFRs more efficiently. The Access RAM below 60h is a good place for data values that the user might need to access rapidly, such as immediate computational results or common program variables. Access RAM also allows for faster and more code efficient context saving and switching of variables.

The mapping of the Access Bank is slightly different when the extended instruction set is enabled (XINST Configuration bit = 1). This is discussed in more detail in **Section 6.6.3 "Mapping the Access Bank in Indexed Literal Offset Mode"**.

6.3.4 GENERAL PURPOSE REGISTER FILE

PIC18 devices may have banked memory in the GPR area. This is data RAM, which is available for use by all instructions. GPRs start at the bottom of Bank 0 (address 000h) and grow upward toward the bottom of the SFR area. GPRs are not initialized by a POR and are unchanged on all other Resets.

© 2011 Microchip Technology Inc.

6.3.5 SPECIAL FUNCTION REGISTERS

The SFRs are registers used by the CPU and peripheral modules for controlling the desired operation of the device. These registers are implemented as static RAM. SFRs start at the top of data memory (FFFh) and extend downward to occupy more than the top half of Bank 15 (F40h to FFFh). Table 6-2, Table 6-3 and Table 6-4 provide a list of these registers.

The SFRs can be classified into two sets: those associated with the "core" device functionality (ALU, Resets and interrupts) and those related to the peripheral functions. The Reset and Interrupt registers are described in their corresponding chapters, while the ALU's STATUS register is described later in this section. Registers related to the operation of the peripheral features are described in the chapter for that peripheral.

The SFRs are typically distributed among the peripherals whose functions they control. Unused SFR locations are unimplemented and read as '0's

Note: The SFRs, located between EC0h and F5Fh, are not part of the Access Bank. Either BANKED instructions (using BSR) or the MOVFF instruction should be used to access these locations. When programming in MPLAB® C18, the compiler will automatically use the appropriate addressing mode.

TABLE 6-2: ACCESS BANK SPECIAL FUNCTION REGISTER MAP

Address	Name	Address	Name	Address	Name	Address	Name	Address	Name
FFFh	TOSU	FDFh	INDF2(1)	FBFh	PSTR1CON	F9Fh	IPR1	F7Fh	SPBRGH1
FFEh	TOSH	FDEh	POSTINC2(1)	FBEh	ECCP1AS	F9Eh	PIR1	F7Eh	BAUDCON1
FFDh	TOSL	FDDh	POSTDEC2(1)	FBDh	ECCP1DEL	F9Dh	PIE1	F7Dh	SPBRGH2
FFCh	STKPTR	FDCh	PREINC2(1)	FBCh	CCPR1H	F9Ch	RCSTA2	F7Ch	BAUDCON2
FFBh	PCLATU	FDBh	PLUSW2(1)	FBBh	CCPR1L	F9Bh	OSCTUNE	F7Bh	TMR3H
FFAh	PCLATH	FDAh	FSR2H	FBAh	CCP1CON	F9Ah	T1GCON	F7Ah	TMR3L
FF9h	PCL	FD9h	FSR2L	FB9h	PSTR2CON	F99h	RTCVALH	F79h	T3CON
FF8h	TBLPTRU	FD8h	STATUS	FB8h	ECCP2AS	F98h	RTCVALL	F78h	TMR4
FF7h	TBLPTRH	FD7h	TMR0H	FB7h	ECCP2DEL	F97h	T3GCON	F77h	PR4
FF6h	TBLPTRL	FD6h	TMR0L	FB6h	CCPR2H	F96h	TRISE	F76h	T4CON
FF5h	TABLAT	FD5h	T0CON	FB5h	CCPR2L	F95h	TRISD	F75h	SSP2BUF
FF4h	PRODH	FD4h	—(5)	FB4h	CCP2CON	F94h	TRISC	F74h	SSP2ADD(3)
FF3h	PRODL	FD3h	OSCCON	FB3h	CTMUCONH	F93h	TRISB	F73h	SSP2STAT
FF2h	INTCON	FD2h	CM1CON	FB2h	CTMUCONL	F92h	TRISA	F72h	SSP2CON1
FF1h	INTCON2	FD1h	CM2CON	FB1h	CTMUICON	F91h	ALRMCFG	F71h	SSP2CON2
FF0h	INTCON3	FD0h	RCON	FB0h	SPBRG1	F90h	ALRMRPT	F70h	CMSTAT
FEFh	INDF0(1)	FCFh	TMR1H	FAFh	RCREG1	F8Fh	ALRMVALH	F6Fh	PMADDRH(2,4)
FEEh	POSTINC0(1)	FCEh	TMR1L	FAEh	TXREG1	F8Eh	ALRMVALL	F6Eh	PMADDRL(2,4)
FEDh	POSTDEC0(1)	FCDh	T1CON	FADh	TXSTA1	F8Dh	LATE(2)	F6Dh	PMDIN1H(2)
FECh	PREINC0(1)	FCCh	TMR2	FACh	RCSTA1	F8Ch	LATD(2)	F6Ch	PMDIN1L(2)
FEBh	PLUSW0(1)	FCBh	PR2	FABh	SPBRG2	F8Bh	LATC	F6Bh	TXADDRL
FEAh	FSR0H	FCAh	T2CON	FAAh	RCREG2	F8Ah	LATB	F6Ah	TXADDRH
FE9h	FSR0L	FC9h	SSP1BUF	FA9h	TXREG2	F89h	LATA	F69h	RXADDRL
FE8h	WREG	FC8h	SSP1ADD(3)	FA8h	TXSTA2	F88h	DMACON1	F68h	RXADDRH
FE7h	INDF1(1)	FC7h	SSP1STAT	FA7h	EECON2	F87h	—(5)	F67h	DMABCL
FE6h	POSTINC1(1)	FC6h	SSP1CON1	FA6h	EECON1	F86h	DMACON2	F66h	DMABCH
FE5h	POSTDEC1(1)	FC5h	SSP1CON2	FA5h	IPR3	F85h	HLVDCON	F65h	UCON
FE4h	PREINC1(1)	FC4h	ADRESH	FA4h	PIR3	F84h	PORTE(2)	F64h	USTAT
FE3h	PLUSW1(1)	FC3h	ADRESL	FA3h	PIE3	F83h	PORTD(2)	F63h	UEIR
FE2h	FSR1H	FC2h	ADCON0	FA2h	IPR2	F82h	PORTC	F62h	UIR
FE1h	FSR1L	FC1h	ADCON1	FA1h	PIR2	F81h	PORTB	F61h	UFRMH
FE0h	BSR	FC0h	WDTCON	FA0h	PIE2	F80h	PORTA	F60h	UFRML

Note 1: This is not a physical register.
2: This register is not available on 28-pin devices.
3: SSPxADD and SSPxMSK share the same address.
4: PMADDRH and PMDOUTH share the same address, and PMADDRL and PMDOUTL share the same address. PMADDRx is used in Master modes and PMDOUTx is used in Slave modes.
5: Reserved; do not write to this location.

TABLE 6-3: NON-ACCESS BANK SPECIAL FUNCTION REGISTER MAP

Address	Name	Address	Name	Address	Name	Address	Name	Address	Name
F5Fh	PMCONH	F3Fh	RTCCFG	F1Fh	—	EFFh	PPSCON	EDFh	—
F5Eh	PMCONL	F3Eh	RTCCAL	F1Eh	—	EFEh	RPINR24	EDEh	RPOR24(1)
F5Dh	PMMODEH	F3Dh	REFOCON	F1Dh	—	EFDh	RPINR23	EDDh	RPOR23(1)
F5Ch	PMMODEL	F3Ch	PADCFG1	F1Ch	—	EFCh	RPINR22	EDCh	RPOR22(1)
F5Bh	PMDOUT2H	F3Bh	—	F1Bh	—	EFBh	RPINR21	EDBh	RPOR21(1)
F5Ah	PMDOUT2L	F3Ah	—	F1Ah	—	EFAh	—	EDAh	RPOR20(1)
F59h	PMDIN2H	F39h	UCFG	F19h	—	EF9h	—	ED9h	RPOR19(1)
F58h	PMDIN2L	F38h	UADDR	F18h	—	EF8h	—	ED8h	RPOR18
F57h	PMEH	F37h	UEIE	F17h	—	EF7h	RPINR17	ED7h	RPOR17
F56h	PMEL	F36h	UIE	F16h	—	EF6h	RPINR16	ED6h	—
F55h	PMSTATH	F35h	UEP15	F15h	—	EF5h	—	ED5h	—
F54h	PMSTATL	F34h	UEP14	F14h	—	EF4h	—	ED4h	—
F53h	CVRCON	F33h	UEP13	F13h	—	EF3h	RPINR13	ED3h	RPOR13
F52h	TCLKCON	F32h	UEP12	F12h	—	EF2h	RPINR12	ED2h	RPOR12
F51h	—	F31h	UEP11	F11h	—	EF1h	—	ED1h	RPOR11
F50h	—	F30h	UEP10	F10h	—	EF0h	—	ED0h	RPOR10
F4Fh	DSGPR1	F2Fh	UEP9	F0Fh	—	EEFh	—	ECFh	RPOR9
F4Eh	DSGPR0	F2Eh	UEP8	F0Eh	—	EEEh	RPINR8	ECEh	RPOR8
F4Dh	DSCONH	F2Dh	UEP7	F0Dh	—	EEDh	RPINR7	ECDh	RPOR7
F4Ch	DSCONL	F2Ch	UEP6	F0Ch	—	EECh	RPINR6	ECCh	RPOR6
F4Bh	DSWAKEH	F2Bh	UEP5	F0Bh	—	EEBh	—	ECBh	RPOR5
F4Ah	DSWAKEL	F2Ah	UEP4	F0Ah	—	EEAh	RPINR4	ECAh	RPOR4
F49h	ANCON1	F29h	UEP3	F09h	—	EE9h	RPINR3	EC9h	RPOR3
F48h	ANCON0	F28h	UEP2	F08h	—	EE8h	RPINR2	EC8h	RPOR2
F47h	—	F27h	UEP1	F07h	—	EE7h	RPINR1	EC7h	RPOR1
F46h	—	F26h	UEP0	F06h	—	EE6h	—	EC6h	RPOR0
F45h	—	F25h	—	F05h	—	EE5h	—	EC5h	—
F44h	—	F24h	—	F04h	—	EE4h	—	EC4h	—
F43h	—	F23h	—	F03h	—	EE3h	—	EC3h	—
F42h	ODCON1	F22h	—	F02h	—	EE2h	—	EC2h	—
F41h	ODCON2	F21h	—	F01h	—	EE1h	—	EC1h	—
F40h	ODCON3	F20h	—	F00h	—	EE0h	—	EC0h	—

Note 1: This register is not available on 28-pin devices.

© 2011 Microchip Technology Inc.

6.3.5.1 Context Defined SFRs

There are several registers that share the same address in the SFR space. The register's definition and usage depends on the operating mode of its associated peripheral. These registers are:

- SSPxADD and SSPxMSK: These are two separate hardware registers, accessed through a single SFR address. The operating mode of the MSSP modules determines which register is being accessed. See **Section 19.5.3.4 "7-Bit Address Masking Mode"** for additional details.
- PMADDRH/L and PMDOUT2H/L: In this case, these named buffer pairs are actually the same physical registers. The Parallel Master Port (PMP) module's operating mode determines what function the registers take on. See **Section 11.1.2 "Data Registers"** for additional details.

TABLE 6-4: REGISTER FILE SUMMARY (PIC18F46J50 FAMILY)

File Name	Bit 7	Bit 6	Bit 5	Bit 4	Bit 3	Bit 2	Bit 1	Bit 0	Value on POR, BOR	Details on Page:
TOSU	—	—	—	Top-of-Stack Upper Byte (TOS<20:16>)					---0 0000	69, 81
TOSH	Top-of-Stack High Byte (TOS<15:8>)								0000 0000	69, 79
TOSL	Top-of-Stack Low Byte (TOS<7:0>)								0000 0000	69, 79
STKPTR	STKFUL	STKUNF	—	SP4	SP3	SP2	SP1	SP0	00-0 0000	69, 79
PCLATU	—	—	bit 21(1)	Holding Register for PC<20:16>					---0 0000	69, 79
PCLATH	Holding Register for PC<15:8>								0000 0000	69, 79
PCL	PC Low Byte (PC<7:0>)								0000 0000	69, 79
TBLPTRU	—	—	bit 21	Program Memory Table Pointer Upper Byte (TBLPTR<20:16>)					--00 0000	69, 112
TBLPTRH	Program Memory Table Pointer High Byte (TBLPTR<15:8>)								0000 0000	69, 112
TBLPTRL	Program Memory Table Pointer Low Byte (TBLPTR<7:0>)								0000 0000	69, 112
TABLAT	Program Memory Table Latch								0000 0000	69, 112
PRODH	Product Register High Byte								xxxx xxxx	69, 113
PRODL	Product Register Low Byte								xxxx xxxx	69, 113
INTCON	GIE/GIEH	PEIE/GIEL	TMR0IE	INT0IE	RBIE	TMR0IF	INT0IF	RBIF	0000 000x	69, 117
INTCON2	$\overline{\text{RBPU}}$	INTEDG0	INTEDG1	INTEDG2	INTEDG3	TMR0IP	INT3IP	RBIP	1111 1111	69, 117
INTCON3	INT2IP	INT1IP	INT3IE	INT2IE	INT1IE	INT3IF	INT2IF	INT1IF	1100 0000	69, 117
INDF0	Uses contents of FSR0 to address data memory – value of FSR0 not changed (not a physical register)								**N/A**	69, 98
POSTINC0	Uses contents of FSR0 to address data memory – value of FSR0 post-incremented (not a physical register)								**N/A**	69, 99
POSTDEC0	Uses contents of FSR0 to address data memory – value of FSR0 post-decremented (not a physical register)								**N/A**	69, 99
PREINC0	Uses contents of FSR0 to address data memory – value of FSR0 pre-incremented (not a physical register)								**N/A**	69, 99
PLUSW0	Uses contents of FSR0 to address data memory – value of FSR0 pre-incremented (not a physical register) – value of FSR0 offset by W								**N/A**	69, 99
FSR0H	—	—	—	—	Indirect Data Memory Address Pointer 0 High Byte				---- 0000	69, 98
FSR0L	Indirect Data Memory Address Pointer 0 Low Byte								xxxx xxxx	69, 98
WREG	Working Register								xxxx xxxx	69, 81
INDF1	Uses contents of FSR1 to address data memory – value of FSR1 not changed (not a physical register)								**N/A**	69, 98
POSTINC1	Uses contents of FSR1 to address data memory – value of FSR1 post-incremented (not a physical register)								**N/A**	69, 99
POSTDEC1	Uses contents of FSR1 to address data memory – value of FSR1 post-decremented (not a physical register)								**N/A**	69, 99
PREINC1	Uses contents of FSR1 to address data memory – value of FSR1 pre-incremented (not a physical register)								**N/A**	70, 99
PLUSW1	Uses contents of FSR1 to address data memory – value of FSR1 pre-incremented (not a physical register) – value of FSR1 offset by W								**N/A**	69, 99

Legend: x = unknown, u = unchanged, - = unimplemented, q = value depends on condition, r = reserved. **Bold** indicates shared access SFRs.

Note 1: Bit 21 of the PC is only available in Serial Programming (SP) modes.

2: Reset value is '0' when Two-Speed Start-up is enabled and '1' if disabled.

3: The SSPxMSK registers are only accessible when SSPxCON2<3:0> = 1001.

4: Alternate names and definitions for these bits when the MSSP module is operating in I^2C™ Slave mode. See **Section 19.5.3.2 "Address Masking Modes"** for details.

5: These bits and/or registers are only available on 44-pin devices; otherwise, they are unimplemented and read as '0'. Reset values are shown for 44-pin devices.

6: The PMADDRH/PMDOUT1H and PMADDRL/PMDOUT1L register pairs share the same physical registers and addresses, but have different functions determined by the module's operating mode. See **Section 11.1.2 "Data Registers"** for more information.

7: The TRISA6 and TRISA7 bits are only implemented when the pins are not configured for primary oscillator functions.

TABLE 6-4: REGISTER FILE SUMMARY (PIC18F46J50 FAMILY) (CONTINUED)

File Name	Bit 7	Bit 6	Bit 5	Bit 4	Bit 3	Bit 2	Bit 1	Bit 0	Value on POR, BOR	Details on Page:
FSR1H	—	—	—	—	Indirect Data Memory Address Pointer 1 High Byte				---- 0000	69, 98
FSR1L	Indirect Data Memory Address Pointer 1 Low Byte								xxxx xxxx	69, 98
BSR	—	—	—	—	Bank Select Register				---- 0000	69, 84
INDF2	Uses contents of FSR2 to address data memory – value of FSR2 not changed (not a physical register)								N/A	69, 98
POSTINC2	Uses contents of FSR2 to address data memory – value of FSR2 post-incremented (not a physical register)								N/A	70, 99
POSTDEC2	Uses contents of FSR2 to address data memory – value of FSR2 post-decremented (not a physical register)								N/A	70, 99
PREINC2	Uses contents of FSR2 to address data memory – value of FSR2 pre-incremented (not a physical register)								N/A	70, 99
PLUSW2	Uses contents of FSR2 to address data memory – value of FSR2 pre-incremented (not a physical register) – value of FSR2 offset by W								N/A	70, 99
FSR2H	—	—	—	—	Indirect Data Memory Address Pointer 2 High Byte				---- 0000	70, 98
FSR2L	Indirect Data Memory Address Pointer 2 Low Byte								xxxx xxxx	70, 98
STATUS	—	—	—	N	OV	Z	DC	C	---x xxxx	70, 96
TMR0H	Timer0 Register High Byte								0000 0000	70, 203
TMR0L	Timer0 Register Low Byte								xxxx xxxx	70, 203
T0CON	TMR0ON	T08BIT	T0CS	T0SE	PSA	T0PS2	T0PS1	T0PS0	1111 1111	70, 196
OSCCON	IDLEN	IRCF2	IRCF1	IRCF0	OSTS(2)	—	SCS1	SCS0	0110 q-00	70, 43
CM1CON	CON	COE	CPOL	EVPOL1	EVPOL0	CREF	CCH1	CCH0	0001 1111	70, 391
CM2CON	CON	COE	CPOL	EVPOL1	EVPOL0	CREF	CCH1	CCH0	0001 1111	70, 391
RCON	IPEN	—	$\overline{CM}$	$\overline{RI}$	$\overline{TO}$	$\overline{PD}$	$\overline{POR}$	$\overline{BOR}$	0-11 1100	68, 70, 129
TMR1H	Timer1 Register High Byte								xxxx xxxx	70, 203
TMR1L	Timer1 Register Low Byte								xxxx xxxx	70, 203
T1CON	TMR1CS1	TMR1CS0	T1CKPS1	T1CKPS0	T1OSCEN	$\overline{T1SYNC}$	RD16	TMR1ON	0000 0000	70, 203
TMR2	Timer2 Register								0000 0000	70, 211
PR2	Timer2 Period Register								1111 1111	70, 211
T2CON	—	T2OUTPS3	T2OUTPS2	T2OUTPS1	T2OUTPS0	TMR2ON	T2CKPS1	T2CKPS0	-000 0000	70, 211
SSP1BUF	MSSP1 Receive Buffer/Transmit Register								xxxx xxxx	70, 288, 322
SSP1ADD	MSSP1 Address Register (I^2C™ Slave mode), MSSP1 Baud Rate Reload Register (I^2C Master mode)								0000 0000	70, 293
SSP1MSK(4)	MSK7	MSK6	MSK5	MSK4	MSK3	MSK2	MSK1	MSK0	1111 1111	70, 295
SSP1STAT	SMP	CKE	D/$\overline{A}$	P	S	R/$\overline{W}$	UA	BF	0000 0000	70, 270, 289
SSP1CON1	WCOL	SSPOV	SSPEN	CKP	SSPM3	SSPM2	SSPM1	SSPM0	0000 0000	70, 270, 290
SSP1CON2	GCEN	ACKSTAT	ACKDT	ACKEN	RCEN	PEN	RSEN	SEN	0000 0000	70, 270, 291
	GCEN	ACKSTAT	ADMSK5(4)	ADMSK4(4)	ADMSK3(4)	ADMSK2(4)	ADMSK1(4)	SEN		
ADRESH	A/D Result Register High Byte								xxxx xxxx	70, 356
ADRESL	A/D Result Register Low Byte								xxxx xxxx	70, 356
ADCON0	VCFG1	VCFG0	CHS3	CHS2	CHS1	CHS0	GO/$\overline{DONE}$	ADON	0000 0000	69, 347
ADCON1	ADFM	ADCAL	ACQT2	ACQT1	ACQT0	ADCS2	ADCS1	ADCS0	0000 0000	70, 347
WDTCON	REGSLP	LVDSTAT	ULPLVL	—	DS	ULPEN	ULPSINK	SWDTEN	1qx- q000	70, 427
PSTR1CON	CMPL1	CMPL0	—	STRSYNC	STRD	STRC	STRB	STRA	00-0 0001	70, 265
ECCP1AS	ECCP1ASE	ECCP1AS2	ECCP1AS1	ECCP1AS0	PSS1AC1	PSS1AC0	PSS1BD1	PSS1BD0	0000 0000	70

Legend: x = unknown, u = unchanged, - = unimplemented, q = value depends on condition, r = reserved. **Bold** indicates shared access SFRs.

Note 1: Bit 21 of the PC is only available in Serial Programming (SP) modes.

2: Reset value is '0' when Two-Speed Start-up is enabled and '1' if disabled.

3: The SSPxMSK registers are only accessible when SSPxCON2<3:0> = 1001.

4: Alternate names and definitions for these bits when the MSSP module is operating in I^2C™ Slave mode. See **Section 19.5.3.2 "Address Masking Modes"** for details.

5: These bits and/or registers are only available on 44-pin devices; otherwise, they are unimplemented and read as '0'. Reset values are shown for 44-pin devices.

6: The PMADDRH/PMDOUT1H and PMADDRL/PMDOUT1L register pairs share the same physical registers and addresses, but have different functions determined by the module's operating mode. See **Section 11.1.2 "Data Registers"** for more information.

7: The TRISA6 and TRISA7 bits are only implemented when the pins are not configured for primary oscillator functions.

© 2011 Microchip Technology Inc.

TABLE 6-4: REGISTER FILE SUMMARY (PIC18F46J50 FAMILY) (CONTINUED)

File Name	Bit 7	Bit 6	Bit 5	Bit 4	Bit 3	Bit 2	Bit 1	Bit 0	Value on POR, BOR	Details on Page:
ECCP1DEL	P1RSEN	P1DC6	P1DC5	P1DC4	P1DC3	P1DC2	P1DC1	P1DC0	0000 0000	71
CCPR1H	Capture/Compare/PWM Register 1 HIgh Byte								xxxx xxxx	71
CCPR1L	Capture/Compare/PWM Register 1 Low Byte								xxxx xxxx	71
CCP1CON	P1M1	P1M0	DC1B1	DC1B0	CCP1M3	CCP1M2	CCP1M1	CCP1M0	0000 0000	71
PSTR2CON	CMPL1	CMPL0	—	STRSYNC	STRD	STRC	STRB	STRA	00-0 0001	71, 265
ECCP2AS	ECCP2ASE	ECCP2AS2	ECCP2AS1	ECCP2AS0	PSS2AC1	PSS2AC0	PSS2BD1	PSS2BD0	0000 0000	71
ECCP2DEL	P2RSEN	P2DC6	P2DC5	P2DC4	P2DC3	P2DC2	P2DC1	P2DC0	0000 0000	71
CCPR2H	Capture/Compare/PWM Register 2 High Byte								xxxx xxxx	71
CCPR2L	Capture/Compare/PWM Register 2 Low Byte								xxxx xxxx	71
CCP2CON	P2M1	P2M0	DC2B1	DC2B0	CCP2M3	CCP2M2	CCP2M1	CCP2M0	0000 0000	71
CTMUCONH	CTMUEN	—	CTMUSIDL	TGEN	EDGEN	EDGSEQEN	IDISSEN	—	0-00 000-	71
CTMUCONL	EDG2POL	EDG2SEL1	EDG2SEL0	EDG1POL	EDG1SEL1	EDG1SEL0	EDG2STAT	EDG1STAT	0000 00xx	71
CTMUICON	ITRIM5	ITRIM4	ITRIM3	ITRIM2	ITRIM1	ITRIM0	IRNG1	IRNG0	0000 0000	71
SPBRG1	EUSART1 Baud Rate Generator Register Low Byte								0000 0000	71, 327
RCREG1	EUSART1 Receive Register								0000 0000	71, 336, 328
TXREG1	EUSART1 Transmit Register								xxxx xxxx	71, 336, 335
TXSTA1	CSRC	TX9	TXEN	SYNC	SENDB	BRGH	TRMT	TX9D	0000 0010	71, 333
RCSTA1	SPEN	RX9	SREN	CREN	ADDEN	FERR	OERR	RX9D	0000 000x	71, 336
SPBRG2	EUSART2 Baud Rate Generator Register Low Byte								0000 0000	71, 327
RCREG2	EUSART2 Receive Register								0000 0000	71, 336, 338
TXREG2	EUSART2 Transmit Register								0000 0000	71, 333, 335
TXSTA2	CSRC	TX9	TXEN	SYNC	SENDB	BRGH	TRMT	TX9D	0000 0010	71, 333
EECON2	Program Memory Control Register 2 (not a physical register)								---- ----	71, 104
EECON1	—	—	WPROG	FREE	WRERR	WREN	WR	—	--00 x00-	71, 104
IPR3	SSP2IP	BCL2IP	RC2IP	TX2IP	TMR4IP	CTMUIP	TMR3GIP	RTCCIP	1111 1111	71, 126
PIR3	SSP2IF	BCL2IF	RC2IF	TX2IF	TMR4IF	CTMUIF	TMR3GIF	RTCCIF	0000 0000	71, 120
PIE3	SSP2IE	BCL2IE	RC2IE	TX2IE	TMR4IE	CTMUIE	TMR3GIE	RTCCIE	0000 0000	71, 123
IPR2	OSCFIP	CM2IP	CM1IP	USBIP	BCL1IP	HLVDIP	TMR3IP	CCP2IP	1111 1111	71, 126
PIR2	OSCFIF	CM2IF	CM1IF	USBIF	BCL1IF	HLVDIF	TMR3IF	CCP2IF	0000 0000	71, 120
PIE2	OSCFIE	CM2IE	CM1IE	USBIE	BCL1IE	HLVDIE	TMR3IE	CCP2IE	0000 0000	71, 123
IPR1	PMPIP(5)	ADIP	RC1IP	TX1IP	SSP1IP	CCP1IP	TMR2IP	TMR1IP	1111 1111	71, 126
PIR1	PMPIF(5)	ADIF	RC1IF	TX1IF	SSP1IF	CCP1IF	TMR2IF	TMR1IF	0000 0000	71, 120
PIE1	PMPIE(5)	ADIE	RC1IE	TX1IE	SSP1IE	CCP1IE	TMR2IE	TMR1IE	0000 0000	71, 123
RCSTA2	SPEN	RX9	SREN	CREN	ADDEN	FERR	OERR	RX9D	0000 000x	72, 336
OSCTUNE	INTSRC	PLLEN	TUN5	TUN4	TUN3	TUN2	TUN1	TUN0	0000 0000	72, 39
T1GCON	TMR1GE	T1GPOL	T1GTM	T1GSPM	T1GGO/ T1DONE	T1GVAL	T1GSS1	T1GSS0	0000 0x00	201
RTCVALH	RTCC Value Register Window High Byte, Based on RTCPTR<1:0>								0xxx xxxx	72, 231
RTCVALL	RTCC Value Register Window Low Byte, Based on RTCPTR<1:0>								0xxx xxxx	72, 231

Legend: x = unknown, u = unchanged, - = unimplemented, q = value depends on condition, r = reserved. **Bold** indicates shared access SFRs.

Note 1: Bit 21 of the PC is only available in Serial Programming (SP) modes.

2: Reset value is '0' when Two-Speed Start-up is enabled and '1' if disabled.

3: The SSPxMSK registers are only accessible when SSPxCON2<3:0> = 1001.

4: Alternate names and definitions for these bits when the MSSP module is operating in I^2C™ Slave mode. See **Section 19.5.3.2 "Address Masking Modes"** for details.

5: These bits and/or registers are only available on 44-pin devices; otherwise, they are unimplemented and read as '0'. Reset values are shown for 44-pin devices.

6: The PMADDRH/PMDOUT1H and PMADDRL/PMDOUT1L register pairs share the same physical registers and addresses, but have different functions determined by the module's operating mode. See **Section 11.1.2 "Data Registers"** for more information.

7: The TRISA6 and TRISA7 bits are only implemented when the pins are not configured for primary oscillator functions.

TABLE 6-4: REGISTER FILE SUMMARY (PIC18F46J50 FAMILY) (CONTINUED)

File Name	Bit 7	Bit 6	Bit 5	Bit 4	Bit 3	Bit 2	Bit 1	Bit 0	Value on POR, BOR	Details on Page:
T3GCON	TMR3GE	T3GPOL	T3GTM	T3GSPM	T3GGO/$\overline{\text{T3DONE}}$	T3GVAL	T3GSS1	T3GSS0	0000 0x00	72, 214
TRISE	—	—	—	—	—	TRISE2	TRISE1	TRISE0	---- -111	72
TRISD	TRISD7	TRISD6	TRISD5	TRISD4	TRISD3	TRISD2	TRISD1	TRISD0	1111 1111	72, 146
TRISC	TRISC7	TRISC6	—	—	—	TRISC2	TRISC1	TRISC0	11-- -111	72, 143
TRISB	TRISB7	TRISB6	TRISB5	TRISB4	TRISB3	TRISB2	TRISB1	TRISB0	1111 1111	72, 139
TRISA	TRISA7(7)	TRISA6(7)	TRISA5	—	TRISA3	TRISA2	TRISA1	TRISA0	qq1- 1111	72, 136
ALRMCFG	ALRMEN	CHIME	AMASK3	AMASK2	AMASK1	AMASK0	ALRMPTR1	ALRMPTR0	0000 0000	72, 229
ALRMRPT	ARPT7	ARPT6	ARPT5	ARPT4	ARPT3	ARPT2	ARPT1	ARPT0	0000 0000	72, 230
ALRMVALH	Alarm Value Register Window High Byte, Based on ALRMPTR<1:0>								xxxx xxxx	72, 234
ALRMVALL	Alarm Value Register Window Low Byte, Based on ALRMPTR<1:0>								xxxx xxxx	72, 234
LATE	—	—	—	—	—	LATE2	LATE1	LATE0	---- -xxx	72, 149
LATD	LATD7	LATD6	LATD5	LATD4	LATD3	LATD2	LATD1	LATD0	xxxx xxxx	72, 147
LATC	LATC7	LATC6	—	—	—	LATC2	LATC1	LATC0	xxxx -xxx	72, 142
LATB	LATB7	LATB6	LATB5	LATB4	LATB3	LATB2	LATB1	LATB0	xxxx xxxx	72, 142
LATA	LATA7	LATA6	LATA5	—	LATA3	LATA2	LATA1	LATA0	xxx- xxxx	72, 142
DMACON1	SSCON1	SSCON0	TXINC	RXINC	DUPLEX1	DUPLEX0	DLYINTEN	DMAEN	0000 0000	72, 282
DMATXBUF	SPI DMA Transmit Buffer								xxxx xxxx	72
DMACON2	DLYCYC3	DLYCYC2	DLYCYC1	DLYCYC0	INTLVL3	INTLVL2	INTLVL1	INTLVL0	0000 0000	72, 283
HLVDCON	VDIRMAG	BGVST	IRVST	HLVDEN	HLVDL3	HLVDL2	HLVDL1	HLVDL0	0000 0000	72
PORTE	RDPU	REPU	—	—	—	RE2	RE1	RE0	00-- -xxx	72, 132
PORTD	RD7	RD6	RD5	RD4	RD3	RD2	RD1	RD0	xxxx xxxx	72, 132
PORTC	RC7	RC6	RC5	RC4	—	RC2	RC1	RC0	xxxx -xxx	72, 132
PORTB	RB7	RB6	RB5	RB4	RB3	RB2	RB1	RB0	xxxx xxxx	72, 132
PORTA	RA7	RA6	RA5	—	RA3	RA2	RA1	RA0	xxx- xxxx	72, 356
SPBRGH1	EUSART1 Baud Rate Generator Register High Byte								0000 0000	72, 327
BAUDCON1	ABDOVF	RCIDL	RXDTP	TXCKP	BRG16	—	WUE	ABDEN	0100 0-00	72, 327
SPBRGH2	EUSART2 Baud Rate Generator Register High Byte								0000 0000	72, 327
BAUDCON2	ABDOVF	RCIDL	RXDTP	TXCKP	BRG16	—	WUE	ABDEN	0100 0-00	72, 327
TMR3H	Timer3 Register High Byte								xxxx xxxx	73, 197
TMR3L	Timer3 Register Low Byte								xxxx xxxx	73, 197
T3CON	TMR3CS1	TMR3CS0	T3CKPS1	T3CKPS0	T3OSCEN	$\overline{\text{T3SYNC}}$	RD16	TMR3ON	0000 0000	73, 197
TMR4	Timer4 Register								0000 0000	73, 223
PR4	Timer4 Period Register								1111 1111	73, 197
T4CON	—	T4OUTPS3	T4OUTPS2	T4OUTPS1	T4OUTPS0	TMR4ON	T4CKPS1	T4CKPS0	-000 0000	73, 223
SSP2BUF	MSSP2 Receive Buffer/Transmit Register								xxxx xxxx	73, 288, 322
SSP2ADD/	MSSP2 Address Register (I^2C™ Slave mode), MSSP2 Baud Rate Reload Register (I^2C Master mode)								0000 0000	73, 288
SSP2MSK(4)	MSK7	MSK6	MSK5	MSK4	MSK3	MSK2	MSK1	MSK0	1111 1111	73, 295
SSP2STAT	SMP	CKE	D/$\overline{\text{A}}$	P	S	R/$\overline{\text{W}}$	UA	BF	0000 0000	73, 270, 310
SSP2CON1	WCOL	SSPOV	SSPEN	CKP	SSPM3	SSPM2	SSPM1	SSPM0	0000 0000	73, 270, 322

Legend: x = unknown, u = unchanged, - = unimplemented, q = value depends on condition, r = reserved. **Bold** indicates shared access SFRs.

Note 1: Bit 21 of the PC is only available in Serial Programming (SP) modes.

2: Reset value is '0' when Two-Speed Start-up is enabled and '1' if disabled.

3: The SSPxMSK registers are only accessible when SSPxCON2<3:0> = 1001.

4: Alternate names and definitions for these bits when the MSSP module is operating in I^2C™ Slave mode. See **Section 19.5.3.2 "Address Masking Modes"** for details.

5: These bits and/or registers are only available on 44-pin devices; otherwise, they are unimplemented and read as '0'. Reset values are shown for 44-pin devices.

6: The PMADDRH/PMDOUT1H and PMADDRL/PMDOUT1L register pairs share the same physical registers and addresses, but have different functions determined by the module's operating mode. See **Section 11.1.2 "Data Registers"** for more information.

7: The TRISA6 and TRISA7 bits are only implemented when the pins are not configured for primary oscillator functions.

© 2011 Microchip Technology Inc.

TABLE 6-4: REGISTER FILE SUMMARY (PIC18F46J50 FAMILY) (CONTINUED)

File Name	Bit 7	Bit 6	Bit 5	Bit 4	Bit 3	Bit 2	Bit 1	Bit 0	Value on POR, BOR	Details on Page:
SSP2CON2	GCEN	ACKSTAT	ACKDT	ACKEN	RCEN	PEN	RSEN	SEN	0000 0000	73, 270, 322
	GCEN	ACKSTAT	ADMSK5(4)	ADMSK4(4)	ADMSK3(4)	ADMSK2(4)	ADMSK1(4)	SEN		
CMSTAT	—	—	—	—	—	—	COUT2	COUT1	---- --11	73, 389
PMADDRH/	—	CS1	Parallel Master Port Address High Byte						-000 0000	73, 177
PMDOUT1H(5,6)	Parallel Port Out Data High Byte (Buffer 1)								0000 0000	73, 180
PMADDRL/	Parallel Master Port Address Low Byte								0000 0000	73, 176
PMDOUT1L(5,6)	Parallel Port Out Data Low Byte (Buffer 0)								0000 0000	73, 177
PMDIN1H(5)	Parallel Port In Data High Byte (Buffer 1)								0000 0000	73, 177
PMDIN1L(5)	Parallel Port In Data Low Byte (Buffer 0)								0000 0000	73, 177
TXADDRL	SPI DMA Transit Data Pointer Low Byte								xxxx xxxx	73, 284
TXADDRH	—	—	—	—	SPI DMA Transit Data Pointer High Byte				---- xxxx	73, 284
RXADDRL	SPI DMA Receive Data Pointer Low Byte								xxxx xxxx	73, 284
RXADDRH	—	—	—	—	SPI DMA Receive Data Pointer High Byte				---- xxxx	73, 284
DMABCL	SPI DMA Byte Count Low Byte								xxxx xxxx	73, 284
DMABCH	—	—	—	—	—	—	SPI DMA Byte Count High Byte		---- --xx	73, 284
UCON	—	PPBRST	SE0	PKTDIS	USBEN	RESUME	SUSPND	—	-0x0 000-	73, 359
USTAT	—	ENDP3	ENDP2	ENDP1	ENDP0	DIR	PPBI	—	-xxx xxx-	73, 363
UEIR	BTSEF	—	—	BTOEF	DFN8EF	CRC16EF	CRC5EF	PIDEF	0--0 0000	73, 376
UIR	—	SOFIF	STALLIF	IDLEIF	TRNIF	ACTVIF	UERRIF	URSTIF	-000 0000	73, 373
UFRMH	—	—	—	—	—	FRM10	FRM9	FRM8	---- -xxx	73, 365
UFRML	FRM7	FRM6	FRM5	FRM4	FRM3	FRM2	FRM1	FRM0	xxxx xxxx	73, 365
PMCONH(5)	PMPEN	—	—	ADRMUX1	ADRMUX0	PTBEEN	PTWREN	PTRDEN	0--0 0000	73, 170
PMCONL(5)	CSF1	CSF0	ALP	—	CS1P	BEP	WRSP	RDSP	000- 0000	73, 171
PMMODEH(5)	BUSY	IRQM1	IRQM0	INCM1	INCM0	MODE16	MODE1	MODE0	0000 0000	74, 172
PMMODEL(5)	WAITB1	WAITB0	WAITM3	WAITM2	WAITM1	WAITM0	WAITE1	WAITE0	0000 0000	74, 173
PMDOUT2H(5)	Parallel Port Out Data High Byte (Buffer 3)								0000 0000	74, 176
PMDOUT2L(5)	Parallel Port Out Data Low Byte (Buffer 2)								0000 0000	74, 176
PMDIN2H(5)	Parallel Port In Data High Byte (Buffer 3)								0000 0000	74, 176
PMDIN2L(5)	Parallel Port In Data Low Byte (Buffer 2)								0000 0000	74, 176
PMEH(5)	PTEN15	PTEN14	PTEN13	PTEN12	PTEN11	PTEN10	PTEN9	PTEN8	0000 0000	74, 174
PMEL(5)	PTEN7	PTEN6	PTEN5	PTEN4	PTEN3	PTEN2	PTEN1	PTEN0	0000 0000	74, 174
PMSTATH(5)	IBF	IBOV	—	—	IB3F	IB2F	IB1F	IB0F	00-- 0000	74, 175
PMSTATL(5)	OBE	OBUF	—	—	OB3E	OB2E	OB1E	OB0E	10-- 1111	74, 175
CVRCON	CVREN	CVROE	CVRR	r	CVR3	CVR2	CVR1	CVR0	0000 0000	74, 392
TCLKCON	—	—	—	T1RUN	—	—	T3CCP2	T3CCP1	---0 --00	202
DSGPR1	Deep Sleep Persistent General Purpose Register (contents retained even in Deep Sleep)								uuuu uuuu	58
DSGPR0	Deep Sleep Persistent General Purpose Register (contents retained even in Deep Sleep)								uuuu uuuu	58
DSCONH	DSEN	—	—	—	—	r	DSULPEN	RTCWDIS	0--- -000	57
DSCONL	—	—	—	—	—	ULPWDIS	DSBOR	RELEASE	---- -000	57
DSWAKEH	—	—	—	—	—	—	—	DSINT0	---- ---0	59
DSWAKEL	DSFLT	—	DSULP	DSWDT	DSRTC	DSMCLR	—	DSPOR	0-00 00-1	59

Legend: x = unknown, u = unchanged, - = unimplemented, q = value depends on condition, r = reserved. **Bold** indicates shared access SFRs.

Note 1: Bit 21 of the PC is only available in Serial Programming (SP) modes.

2: Reset value is '0' when Two-Speed Start-up is enabled and '1' if disabled.

3: The SSPxMSK registers are only accessible when SSPxCON2<3:0> = 1001.

4: Alternate names and definitions for these bits when the MSSP module is operating in I^2C™ Slave mode. See **Section 19.5.3.2 "Address Masking Modes"** for details.

5: These bits and/or registers are only available on 44-pin devices; otherwise, they are unimplemented and read as '0'. Reset values are shown for 44-pin devices.

6: The PMADDRH/PMDOUT1H and PMADDRL/PMDOUT1L register pairs share the same physical registers and addresses, but have different functions determined by the module's operating mode. See **Section 11.1.2 "Data Registers"** for more information.

7: The TRISA6 and TRISA7 bits are only implemented when the pins are not configured for primary oscillator functions.

TABLE 6-4: REGISTER FILE SUMMARY (PIC18F46J50 FAMILY) (CONTINUED)

File Name	Bit 7	Bit 6	Bit 5	Bit 4	Bit 3	Bit 2	Bit 1	Bit 0	Value on POR, BOR	Details on Page:
ANCON1	VBGEN	r	—	PCFG12	PCFG11	PCFG10	PCFG9	PCFG8	00-0 0000	74, 348
ANCON0	PCFG7(5)	PCFG6(5)	PCFG5(5)	PCFG4	PCFG3	PCFG2	PCFG1	PCFG0	0000 0000	74, 347
ODCON1	—	—	—	—	—	—	ECCP20D	ECCP10D	---- --00	74, 134
ODCON2	—	—	—	—	—	—	U2OD	U1OD	---- --00	74, 134
ODCON3	—	—	—	—	—	—	SPI2OD	SPI1OD	---- --00	74, 135
RTCCFG	RTCEN	—	RTCWREN	RTCSYNC	HALFSEC	RTCOE	RTCPTR1	RTCPTR0	0-00 0000	74, 227
RTCCAL	CAL7	CAL6	CAL5	CAL4	CAL3	CAL2	CAL1	CAL0	0000 0000	74, 228
REFOCON	ROON	—	ROSSLP	ROSEL	RODIV3	RODIV2	RODIV1	RODIV0	0-00 0000	74, 44
PADCFG1	—	—	—	—	—	RTSECSEL1	RTSECSEL0	PMPTTL	---- -000	74, 135
UCFG	UTEYE	UOEMON	—	UPUEN	UTRDIS	FSEN	PPB1	PPB0	00-0 0000	74, 360
UADDR	—	ADDR6	ADDR5	ADDR4	ADDR3	ADDR2	ADDR1	ADDR0	-000 0000	74, 365
UEIE	BTSEE	—	—	BTOEE	DFN8EE	CRC16EE	CRC5EE	PIDEE	0--0 0000	74, 377
UIE	—	SOFIE	STALLIE	IDLEIE	TRNIE	ACTVIE	UERRIE	URSTIE	-000 0000	74, 375
UEP15	—	—	—	EPHSHK	EPCONDIS	EPOUTEN	EPINEN	EPSTALL	---0 0000	74, 364
UEP14	—	—	—	EPHSHK	EPCONDIS	EPOUTEN	EPINEN	EPSTALL	---0 0000	74, 364
UEP13	—	—	—	EPHSHK	EPCONDIS	EPOUTEN	EPINEN	EPSTALL	---0 0000	74, 364
UEP12	—	—	—	EPHSHK	EPCONDIS	EPOUTEN	EPINEN	EPSTALL	---0 0000	74, 364
UEP11	—	—	—	EPHSHK	EPCONDIS	EPOUTEN	EPINEN	EPSTALL	---0 0000	74, 364
UEP10	—	—	—	EPHSHK	EPCONDIS	EPOUTEN	EPINEN	EPSTALL	---0 0000	74, 364
UEP9	—	—	—	EPHSHK	EPCONDIS	EPOUTEN	EPINEN	EPSTALL	---0 0000	74, 364
UEP8	—	—	—	EPHSHK	EPCONDIS	EPOUTEN	EPINEN	EPSTALL	---0 0000	74, 364
UEP7	—	—	—	EPHSHK	EPCONDIS	EPOUTEN	EPINEN	EPSTALL	---0 0000	74, 364
UEP6	—	—	—	EPHSHK	EPCONDIS	EPOUTEN	EPINEN	EPSTALL	---0 0000	75, 364
UEP5	—	—	—	EPHSHK	EPCONDIS	EPOUTEN	EPINEN	EPSTALL	---0 0000	75, 364
UEP4	—	—	—	EPHSHK	EPCONDIS	EPOUTEN	EPINEN	EPSTALL	---0 0000	75, 364
UEP3	—	—	—	EPHSHK	EPCONDIS	EPOUTEN	EPINEN	EPSTALL	---0 0000	75, 364
UEP2	—	—	—	EPHSHK	EPCONDIS	EPOUTEN	EPINEN	EPSTALL	---0 0000	75, 364
UEP1	—	—	—	EPHSHK	EPCONDIS	EPOUTEN	EPINEN	EPSTALL	---0 0000	75, 364
UEP0	—	—	—	EPHSHK	EPCONDIS	EPOUTEN	EPINEN	EPSTALL	---0 0000	75, 364
PPSCON	—	—	—	—	—	—	—	IOLOCK	---- ---0	155
RPINR24	—	—	—	Input Function FLT0 to Input Pin Mapping Bits					---1 1111	75, 160
RPINR23	—	—	—	Input Function $\overline{SS2}$ to Input Pin Mapping Bits					---1 1111	75, 160
RPINR22	—	—	—	Input Function SCK2 to Input Pin Mapping Bits					---1 1111	75, 160
RPINR21	—	—	—	Input Function SDI2 to Input Pin Mapping Bits					---1 1111	75, 159
RPINR17	—	—	—	Input Function CK2 to Input Pin Mapping Bits					---1 1111	75, 159
RPINR16	—	—	—	Input Function RX2DT2 to Input Pin Mapping Bits					---1 1111	75
RPINR13	—	—	—	Input Function T3G to Input Pin Mapping Bits					---1 1111	75
RPINR12	—	—	—	Input Function T1G to Input Pin Mapping Bits					---1 1111	75, 158
RPINR8	—	—	—	Input Function IC2 to Input Pin Mapping Bits					---1 1111	75, 158
RPINR7	—	—	—	Input Function IC1 to Input Pin Mapping Bits					---1 1111	75, 157
RPINR6	—	—	—	Input Function T3CKI to Input Pin Mapping Bits					---1 1111	75, 157
RPINR4	—	—	—	Input Function T0CKI to Input Pin Mapping Bits					---1 1111	75, 157

Legend: x = unknown, u = unchanged, - = unimplemented, q = value depends on condition, r = reserved. **Bold** indicates shared access SFRs.

Note 1: Bit 21 of the PC is only available in Serial Programming (SP) modes.

2: Reset value is '0' when Two-Speed Start-up is enabled and '1' if disabled.

3: The SSPxMSK registers are only accessible when SSPxCON2<3:0> = 1001.

4: Alternate names and definitions for these bits when the MSSP module is operating in I^2C™ Slave mode. See **Section 19.5.3.2 "Address Masking Modes"** for details.

5: These bits and/or registers are only available on 44-pin devices; otherwise, they are unimplemented and read as '0'. Reset values are shown for 44-pin devices.

6: The PMADDRH/PMDOUT1H and PMADDRL/PMDOUT1L register pairs share the same physical registers and addresses, but have different functions determined by the module's operating mode. See **Section 11.1.2 "Data Registers"** for more information.

7: The TRISA6 and TRISA7 bits are only implemented when the pins are not configured for primary oscillator functions.

© 2011 Microchip Technology Inc.

TABLE 6-4: REGISTER FILE SUMMARY (PIC18F46J50 FAMILY) (CONTINUED)

File Name	Bit 7	Bit 6	Bit 5	Bit 4	Bit 3	Bit 2	Bit 1	Bit 0	Value on POR, BOR	Details on Page:
RPINR3	—	—	—	Input Function INT3 to Input Pin Mapping Bits					---1 1111	76, 156
RPINR2	—	—	—	Input Function INT2 to Input Pin Mapping Bits					---1 1111	76
RPINR1	—	—	—	Input Function INT1 to Input Pin Mapping Bits					---1 1111	76, 156
RPOR24(5)	—	—	—	Remappable Pin RP24 Output Signal Select Bits					---0 0000	76, 168
RPOR23(5)	—	—	—	Remappable Pin RP23 Output Signal Select Bits					---0 0000	76, 167
RPOR22(5)	—	—	—	Remappable Pin RP22 Output Signal Select Bits					---0 0000	76, 167
RPOR21(5)	—	—	—	Remappable Pin RP21 Output Signal Select Bits					---0 0000	76, 167
RPOR20(5)	—	—	—	Remappable Pin RP20 Output Signal Select Bits					---0 0000	76, 166
RPOR19(5)	—	—	—	Remappable Pin RP19 Output Signal Select Bits					---0 0000	76, 166
RPOR18	—	—	—	Remappable Pin RP18 Output Signal Select Bits					---0 0000	76, 166
RPOR17	—	—	—	Remappable Pin RP17 Output Signal Select Bits					---0 0000	76, 165
RPOR13	—	—	—	Remappable Pin RP13 Output Signal Select Bits					---0 0000	76, 165
RPOR12	—	—	—	Remappable Pin RP12 Output Signal Select Bits					---0 0000	76, 165
RPOR11	—	—	—	Remappable Pin RP11 Output Signal Select Bits					---0 0000	76, 164
RPOR10	—	—	—	Remappable Pin RP10 Output Signal Select Bits					---0 0000	76, 164
RPOR9	—	—	—	Remappable Pin RP9 Output Signal Select Bits					---0 0000	76, 164
RPOR8	—	—	—	Remappable Pin RP8 Output Signal Select Bits					---0 0000	76, 163
RPOR7	—	—	—	Remappable Pin RP7 Output Signal Select Bits					---0 0000	76, 163
RPOR6	—	—	—	Remappable Pin RP6 Output Signal Select Bits					---0 0000	76, 163
RPOR5	—	—	—	Remappable Pin RP5 Output Signal Select Bits					---0 0000	76, 162
RPOR4	—	—	—	Remappable Pin RP4 Output Signal Select Bits					---0 0000	76, 162
RPOR3	—	—	—	Remappable Pin RP3 Output Signal Select Bits					---0 0000	76, 162
RPOR2	—	—	—	Remappable Pin RP2 Output Signal Select Bits					---0 0000	76, 161
RPOR1	—	—	—	Remappable Pin RP1 Output Signal Select Bits					---0 0000	76, 161
RPOR0	—	—	—	Remappable Pin RP0 Output Signal Select Bits					---0 0000	76, 161

Legend: x = unknown, u = unchanged, - = unimplemented, q = value depends on condition, r = reserved. **Bold** indicates shared access SFRs.

Note 1: Bit 21 of the PC is only available in Serial Programming (SP) modes.

2: Reset value is '0' when Two-Speed Start-up is enabled and '1' if disabled.

3: The SSPxMSK registers are only accessible when SSPxCON2<3:0> = 1001.

4: Alternate names and definitions for these bits when the MSSP module is operating in I^2C™ Slave mode. See **Section 19.5.3.2 "Address Masking Modes"** for details.

5: These bits and/or registers are only available on 44-pin devices; otherwise, they are unimplemented and read as '0'. Reset values are shown for 44-pin devices.

6: The PMADDRH/PMDOUT1H and PMADDRL/PMDOUT1L register pairs share the same physical registers and addresses, but have different functions determined by the module's operating mode. See **Section 11.1.2 "Data Registers"** for more information.

7: The TRISA6 and TRISA7 bits are only implemented when the pins are not configured for primary oscillator functions.

6.3.6 STATUS REGISTER

The STATUS register in Register 6-2, contains the arithmetic status of the ALU. The STATUS register can be the operand for any instruction, as with any other register. If the STATUS register is the destination for an instruction that affects the Z, DC, C, OV or N bits, then the write to these five bits is disabled.

These bits are set or cleared according to the device logic. Therefore, the result of an instruction with the STATUS register as destination may be different than intended. For example, `CLRF STATUS` will set the Z bit but leave the other bits unchanged. The STATUS register then reads back as '`000u u1uu`'. It is recommended, therefore, that only `BCF`, `BSF`, `SWAPF`, `MOVFF` and `MOVWF` instructions are used to alter the STATUS register because these instructions do not affect the Z, C, DC, OV or N bits in the STATUS register.

For other instructions not affecting any Status bits, see the instruction set summary in Table 28-2 and Table 28-3.

Note:	The C and DC bits operate as a $\overline{\text{borrow}}$ and digit $\overline{\text{borrow}}$ bits respectively, in subtraction.

REGISTER 6-2: STATUS REGISTER (ACCESS FD8h)

U-0	U-0	U-0	R/W-x	R/W-x	R/W-x	R/W-x	R/W-x
—	—	—	N	OV	Z	DC(1)	C(2)
bit 7							bit 0

Legend:			
R = Readable bit	W = Writable bit	U = Unimplemented bit, read as '0'	
-n = Value at POR	'1' = Bit is set	'0' = Bit is cleared	x = Bit is unknown

bit 7-5 **Unimplemented:** Read as '0'

bit 4 **N:** Negative bit

This bit is used for signed arithmetic (2's complement). It indicates whether the result was negative (ALU MSB = 1).

1 = Result was negative
0 = Result was positive

bit 3 **OV:** Overflow bit

This bit is used for signed arithmetic (2's complement). It indicates an overflow of the 7-bit magnitude, which causes the sign bit (bit 7) to change state.

1 = Overflow occurred for signed arithmetic (in this arithmetic operation)
0 = No overflow occurred

bit 2 **Z:** Zero bit

1 = The result of an arithmetic or logic operation is zero
0 = The result of an arithmetic or logic operation is not zero

bit 1 **DC:** Digit carry/$\overline{\text{borrow}}$ bit(1)

For `ADDWF`, `ADDLW`, `SUBLW` and `SUBWF` instructions:
1 = A carry-out from the 4th low-order bit of the result occurred
0 = No carry-out from the 4th low-order bit of the result

bit 0 **C:** Carry/$\overline{\text{borrow}}$ bit(2)

For `ADDWF`, `ADDLW`, `SUBLW` and `SUBWF` instructions:
1 = A carry-out from the MSb of the result occurred
0 = No carry-out from the MSb of the result occurred

Note 1: For $\overline{\text{borrow}}$, the polarity is reversed. A subtraction is executed by adding the 2's complement of the second operand. For rotate (`RRF`, `RLF`) instructions, this bit is loaded with either bit 4 or bit 3 of the source register.

2: For $\overline{\text{borrow}}$, the polarity is reversed. A subtraction is executed by adding the 2's complement of the second operand. For rotate (`RRF`, `RLF`) instructions, this bit is loaded with either the high or low-order bit of the source register.

© 2011 Microchip Technology Inc.

6.4 Data Addressing Modes

Note: The execution of some instructions in the core PIC18 instruction set are changed when the PIC18 extended instruction set is enabled. See **Section 6.6 "Data Memory and the Extended Instruction Set"** for more information.

While the program memory can be addressed in only one way, through the PC, information in the data memory space can be addressed in several ways. For most instructions, the addressing mode is fixed. Other instructions may use up to three modes, depending on which operands are used and whether or not the extended instruction set is enabled.

The addressing modes are:

- Inherent
- Literal
- Direct
- Indirect

An additional addressing mode, Indexed Literal Offset, is available when the extended instruction set is enabled (XINST Configuration bit = 1). Its operation is discussed in more detail in **Section 6.6.1 "Indexed Addressing with Literal Offset"**.

6.4.1 INHERENT AND LITERAL ADDRESSING

Many PIC18 control instructions do not need any argument at all; they either perform an operation that globally affects the device, or they operate implicitly on one register. This addressing mode is known as Inherent Addressing. Examples include SLEEP, RESET and DAW.

Other instructions work in a similar way, but require an additional explicit argument in the opcode. This is known as Literal Addressing mode, because they require some literal value as an argument. Examples include ADDLW and MOVLW, which respectively, add or move a literal value to the W register. Other examples include CALL and GOTO, which include a 20-bit program memory address.

6.4.2 DIRECT ADDRESSING

Direct Addressing specifies all or part of the source and/or destination address of the operation within the opcode itself. The options are specified by the arguments accompanying the instruction.

In the core PIC18 instruction set, bit-oriented and byte-oriented instructions use some version of Direct Addressing by default. All of these instructions include some 8-bit Literal Address as their LSB. This address specifies either a register address in one of the banks of data RAM (**Section 6.3.4 "General Purpose Register File"**), or a location in the Access Bank (**Section 6.3.3 "Access Bank"**) as the data source for the instruction.

The Access RAM bit, 'a', determines how the address is interpreted. When 'a' is '1', the contents of the BSR (**Section 6.3.2 "Bank Select Register"**) are used with the address to determine the complete 12-bit address of the register. When 'a' is '0', the address is interpreted as being a register in the Access Bank. Addressing that uses the Access RAM is sometimes also known as Direct Forced Addressing mode.

A few instructions, such as MOVFF, include the entire 12-bit address (either source or destination) in their opcodes. In these cases, the BSR is ignored entirely.

The destination of the operation's results is determined by the destination bit, 'd'. When 'd' is '1', the results are stored back in the source register, overwriting its original contents. When 'd' is '0', the results are stored in the W register. Instructions without the 'd' argument have a destination that is implicit in the instruction; their destination is either the target register being operated on or the W register.

6.4.3 INDIRECT ADDRESSING

Indirect Addressing allows the user to access a location in data memory without giving a fixed address in the instruction. This is done by using File Select Registers (FSRs) as pointers to the locations to be read or written to. Since the FSRs are themselves located in RAM as SFRs, they can also be directly manipulated under program control. This makes FSRs very useful in implementing data structures such as tables and arrays in data memory.

The registers for Indirect Addressing are also implemented with Indirect File Operands (INDFs) that permit automatic manipulation of the pointer value with auto-incrementing, auto-decrementing or offsetting with another value. This allows for efficient code using loops, such as the example of clearing an entire RAM bank in Example 6-5. It also enables users to perform Indexed Addressing and other Stack Pointer operations for program memory in data memory.

EXAMPLE 6-5: HOW TO CLEAR RAM (BANK 1) USING INDIRECT ADDRESSING

```
        LFSR    FSR0, 0x100 ;
NEXT    CLRF    POSTINC0    ; Clear INDF
                            ; register then
                            ; inc pointer
        BTFSS   FSR0H, 1    ; All done with
                            ; Bank1?
        BRA     NEXT        ; NO, clear next
CONTINUE                    ; YES, continue
```

6.4.3.1 FSR Registers and the INDF Operand (INDF)

At the core of Indirect Addressing are three sets of registers: FSR0, FSR1 and FSR2. Each represents a pair of 8-bit registers, FSRnH and FSRnL. The four upper bits of the FSRnH register are not used, so each FSR pair holds a 12-bit value. This represents a value that can address the entire range of the data memory in a linear fashion. The FSR register pairs then serve as pointers to data memory locations.

Indirect Addressing is accomplished with a set of INDF operands, INDF0 through INDF2. These can be presumed as "virtual" registers: they are mapped in the SFR space but are not physically implemented. Reading or writing to a particular INDF register actually accesses its corresponding FSR register pair. A read from INDF1, for example, reads the data at the address indicated by FSR1H:FSR1L. Instructions that use the INDF registers as operands actually use the contents of their corresponding FSR as a pointer to the instruction's target. The INDF operand is just a convenient way of using the pointer.

Because Indirect Addressing uses a full 12-bit address, data RAM banking is not necessary. Thus, the current contents of the BSR and the Access RAM bit have no effect on determining the target address.

FIGURE 6-8: INDIRECT ADDRESSING

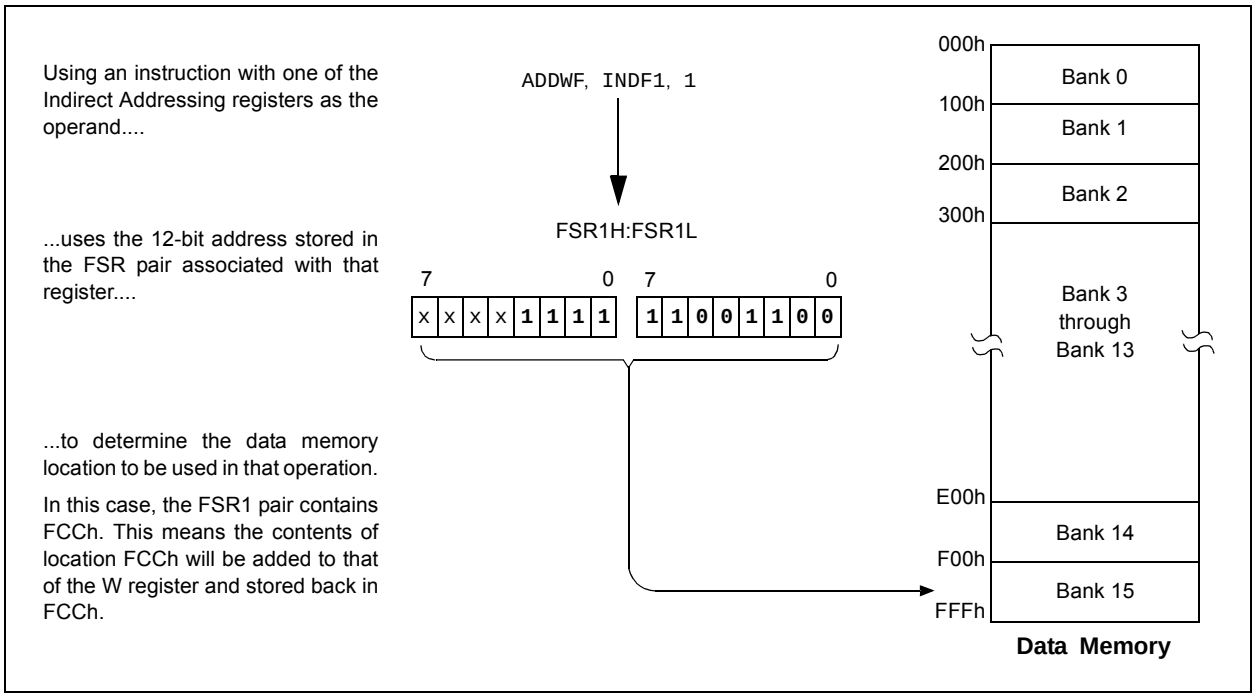

© 2011 Microchip Technology Inc.

6.4.3.2 FSR Registers and POSTINC, POSTDEC, PREINC and PLUSW

In addition to the INDF operand, each FSR register pair also has four additional indirect operands. Like INDF, these are "virtual" registers that cannot be indirectly read or written to. Accessing these registers actually accesses the associated FSR register pair, but also performs a specific action on its stored value. They are:

- POSTDEC: accesses the FSR value, then automatically decrements it by '1' thereafter
- POSTINC: accesses the FSR value, then automatically increments it by '1' thereafter
- PREINC: increments the FSR value by '1', then uses it in the operation
- PLUSW: adds the signed value of the W register (range of -128 to +127) to that of the FSR and uses the new value in the operation

In this context, accessing an INDF register uses the value in the FSR registers without changing them. Similarly, accessing a PLUSW register gives the FSR value offset by the value in the W register; neither value is actually changed in the operation. Accessing the other virtual registers changes the value of the FSR registers.

Operations on the FSRs with POSTDEC, POSTINC and PREINC affect the entire register pair; that is, roll-overs of the FSRnL register from FFh to 00h carry over to the FSRnH register. On the other hand, results of these operations do not change the value of any flags in the STATUS register (e.g., Z, N, OV, etc.).

The PLUSW register can be used to implement a form of Indexed Addressing in the data memory space. By manipulating the value in the W register, users can reach addresses that are fixed offsets from pointer addresses. In some applications, this can be used to implement some powerful program control structure, such as software stacks, inside of data memory.

6.4.3.3 Operations by FSRs on FSRs

Indirect Addressing operations that target other FSRs or virtual registers represent special cases. For example, using an FSR to point to one of the virtual registers will not result in successful operations. As a specific case, assume that FSR0H:FSR0L contains FE7h, the address of INDF1. Attempts to read the value of the INDF1, using INDF0 as an operand, will return 00h. Attempts to write to INDF1, using INDF0 as the operand, will result in a NOP.

On the other hand, using the virtual registers to write to an FSR pair may not occur as planned. In these cases, the value will be written to the FSR pair but without any incrementing or decrementing. Thus, writing to INDF2 or POSTDEC2 will write the same value to the FSR2H:FSR2L.

Since the FSRs are physical registers mapped in the SFR space, they can be manipulated through all direct operations. Users should proceed cautiously when working on these registers, particularly if their code uses Indirect Addressing.

Similarly, operations by Indirect Addressing are generally permitted on all other SFRs. Users should exercise appropriate caution that they do not inadvertently change settings that might affect the operation of the device.

6.5 Program Memory and the Extended Instruction Set

The operation of program memory is unaffected by the use of the extended instruction set.

Enabling the extended instruction set adds five additional two-word commands to the existing PIC18 instruction set: ADDFSR, CALLW, MOVSF, MOVSS and SUBFSR. These instructions are executed as described in **Section 6.2.4 "Two-Word Instructions"**.

6.6 Data Memory and the Extended Instruction Set

Enabling the PIC18 extended instruction set (XINST Configuration bit = 1) significantly changes certain aspects of data memory and its addressing. Specifically, the use of the Access Bank for many of the core PIC18 instructions is different. This is due to the introduction of a new addressing mode for the data memory space. This mode also alters the behavior of Indirect Addressing using FSR2 and its associated operands.

What does not change is just as important. The size of the data memory space is unchanged, as well as its linear addressing. The SFR map remains the same. Core PIC18 instructions can still operate in both Direct and Indirect Addressing mode; inherent and literal instructions do not change at all. Indirect Addressing with FSR0 and FSR1 also remains unchanged.

6.6.1 INDEXED ADDRESSING WITH LITERAL OFFSET

Enabling the PIC18 extended instruction set changes the behavior of Indirect Addressing using the FSR2 register pair and its associated file operands. Under proper conditions, instructions that use the Access Bank, that is, most bit and byte-oriented instructions, can invoke a form of Indexed Addressing using an offset specified in the instruction. This special addressing mode is known as Indexed Addressing with Literal Offset, or Indexed Literal Offset mode.

When using the extended instruction set, this addressing mode requires the following:

- The use of the Access Bank is forced (‘a’ = 0)
- The file address argument is less than or equal to 5Fh

Under these conditions, the file address of the instruction is not interpreted as the lower byte of an address (used with the BSR in Direct Addressing) or as an 8-bit address in the Access Bank. Instead, the value is interpreted as an offset value to an Address Pointer specified by FSR2. The offset and the contents of FSR2 are added to obtain the target address of the operation.

6.6.2 INSTRUCTIONS AFFECTED BY INDEXED LITERAL OFFSET MODE

Any of the core PIC18 instructions that can use Direct Addressing are potentially affected by the Indexed Literal Offset Addressing mode. This includes all byte and bit-oriented instructions, or almost one-half of the standard PIC18 instruction set. Instructions that only use Inherent or Literal Addressing modes are unaffected.

Additionally, byte and bit-oriented instructions are not affected if they do not use the Access Bank (Access RAM bit is ‘1’), or include a file address of 60h or above. Instructions meeting these criteria will continue to execute as before. A comparison of the different possible addressing modes, when the extended instruction set is enabled, is provided in Figure 6-9.

Those who desire to use byte or bit-oriented instructions, in the Indexed Literal Offset mode, should note the changes to assembler syntax for this mode. This is described in more detail in **Section 28.2.1 “Extended Instruction Syntax”**.

© 2011 Microchip Technology Inc.

FIGURE 6-9: COMPARING ADDRESSING OPTIONS FOR BIT-ORIENTED AND BYTE-ORIENTED INSTRUCTIONS (EXTENDED INSTRUCTION SET ENABLED)

EXAMPLE INSTRUCTION: `ADDWF, f, d, a` (Opcode: `0010 01da ffff ffff`)

When a = 0 and f ≥ 60h:

The instruction executes in Direct Forced mode. 'f' is interpreted as a location in the Access RAM between 060h and FFFh. This is the same as locations F60h to FFFh (Bank 15) of data memory.

Locations below 060h are not available in this addressing mode.

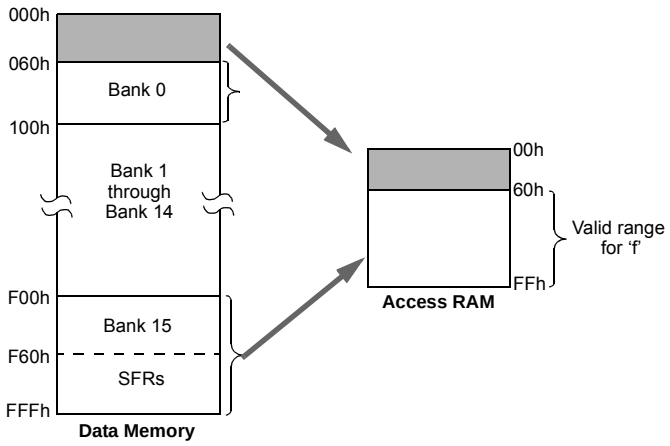

When a = 0 and f ≤ 5Fh:

The instruction executes in Indexed Literal Offset mode. 'f' is interpreted as an offset to the address value in FSR2. The two are added together to obtain the address of the target register for the instruction. The address can be anywhere in the data memory space.

Note that in this mode, the correct syntax is:
`ADDWF [k], d`
where 'k' is same as 'f'.

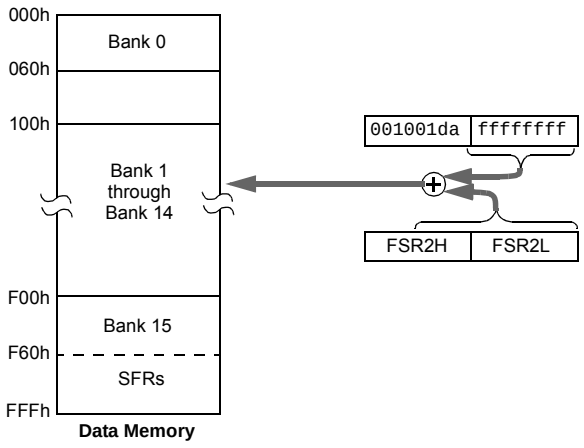

When a = 1 (all values of f):

The instruction executes in Direct mode (also known as Direct Long mode). 'f' is interpreted as a location in one of the 16 banks of the data memory space. The bank is designated by the Bank Select Register (BSR). The address can be in any implemented bank in the data memory space.

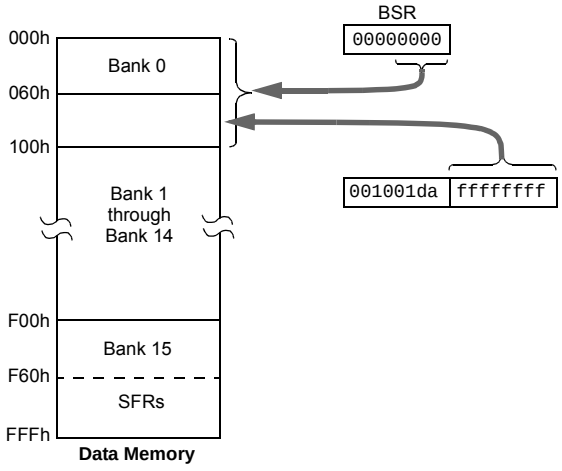

6.6.3 MAPPING THE ACCESS BANK IN INDEXED LITERAL OFFSET MODE

The use of Indexed Literal Offset Addressing mode effectively changes how the lower part of Access RAM (00h to 5Fh) is mapped. Rather than containing just the contents of the bottom part of Bank 0, this mode maps the contents from Bank 0 and a user-defined "window" that can be located anywhere in the data memory space. The value of FSR2 establishes the lower boundary of the addresses mapped to the window, while the upper boundary is defined by FSR2, plus 95 (5Fh). Addresses in the Access RAM above 5Fh are mapped as previously described (see **Section 6.3.3 "Access Bank"**). Figure 6-10 provides an example of Access Bank remapping in this addressing mode.

Remapping of the Access Bank applies *only* to operations using the Indexed Literal Offset mode. Operations that use the BSR (Access RAM bit is '1') will continue to use Direct Addressing as before. Any Indirect or Indexed Addressing operation that explicitly uses any of the indirect file operands (including FSR2) will continue to operate as standard Indirect Addressing. Any instruction that uses the Access Bank, but includes a register address of greater than 05Fh, will use Direct Addressing and the normal Access Bank map.

6.6.4 BSR IN INDEXED LITERAL OFFSET MODE

Although the Access Bank is remapped when the extended instruction set is enabled, the operation of the BSR remains unchanged. Direct Addressing, using the BSR to select the data memory bank, operates in the same manner as previously described.

FIGURE 6-10: REMAPPING THE ACCESS BANK WITH INDEXED LITERAL OFFSET ADDRESSING

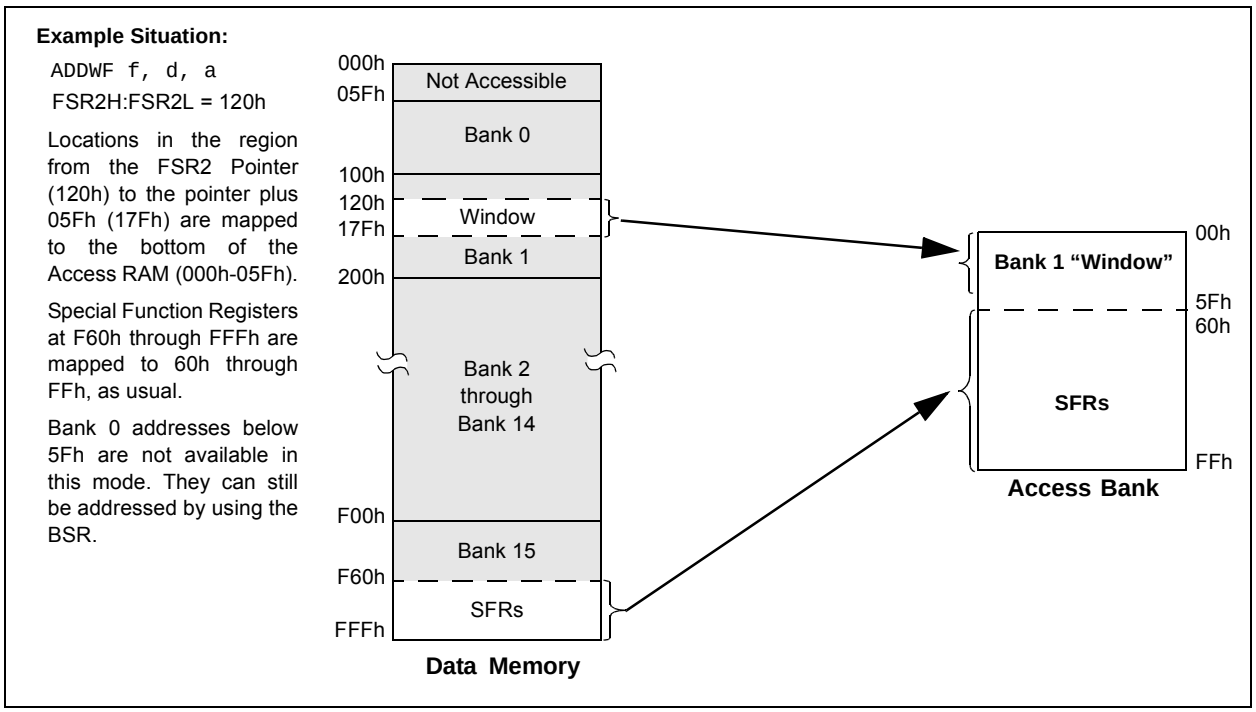

© 2011 Microchip Technology Inc.

7.0 FLASH PROGRAM MEMORY

The Flash program memory is fully readable, writable and erasable during normal operation.

A read from program memory is executed on 1 byte at a time. A write to program memory is executed on blocks of 64 bytes at a time or 2 bytes at a time. Program memory is erased in blocks of 1024 bytes at a time. A bulk erase operation may not be issued from user code.

Writing or erasing program memory will cease instruction fetches until the operation is complete. The program memory cannot be accessed during the write or erase, therefore, code cannot execute. An internal programming timer terminates program memory writes and erases.

A value written to program memory does not need to be a valid instruction. Executing a program memory location that forms an invalid instruction results in a NOP.

7.1 Table Reads and Table Writes

In order to read and write program memory, there are two operations that allow the processor to move bytes between the program memory space and the data RAM:

- Table Read (TBLRD)
- Table Write (TBLWT)

The program memory space is 16 bits wide, while the data RAM space is 8 bits wide. Table reads and table writes move data between these two memory spaces through an 8-bit register (TABLAT).

Table read operations retrieve data from program memory and place it into the data RAM space. Figure 7-1 illustrates the operation of a table read with program memory and data RAM.

Table write operations store data from the data memory space into holding registers in program memory. The procedure to write the contents of the holding registers into program memory is detailed in **Section 7.5 "Writing to Flash Program Memory"**. Figure 7-2 illustrates the operation of a table write with program memory and data RAM.

Table operations work with byte entities. A table block containing data, rather than program instructions, is not required to be word-aligned. Therefore, a table block can start and end at any byte address. If a table write is being used to write executable code into program memory, program instructions will need to be word-aligned.

FIGURE 7-1: TABLE READ OPERATION

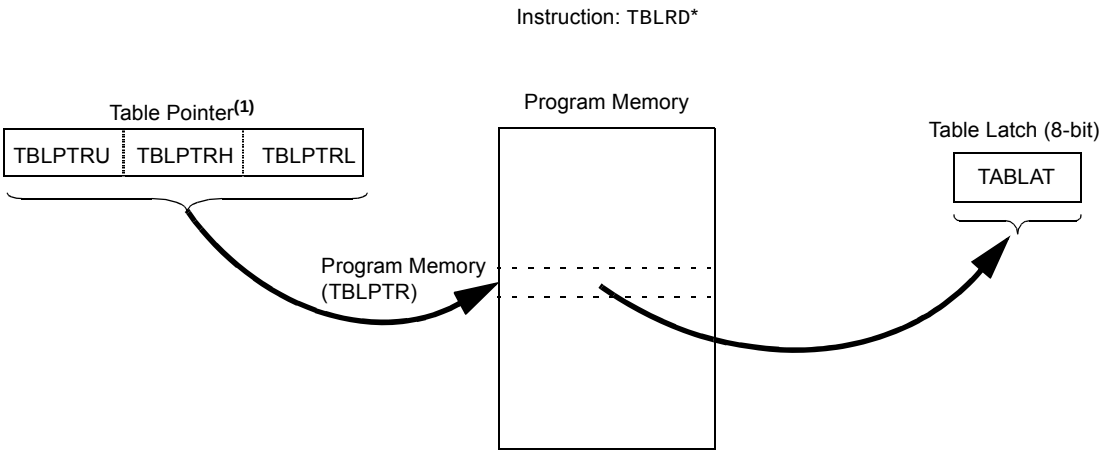

Note 1: The Table Pointer register points to a byte in program memory.

FIGURE 7-2: TABLE WRITE OPERATION

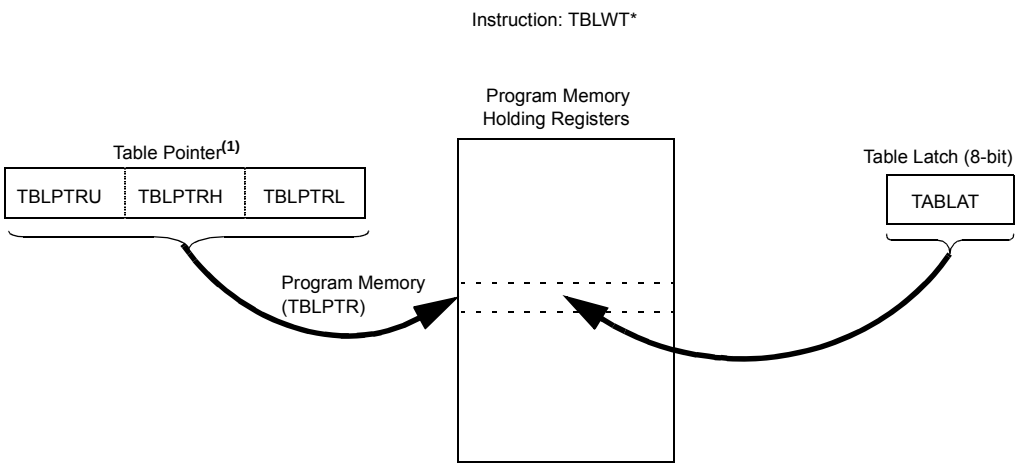

Note 1: The Table Pointer actually points to one of 64 holding registers, the address of which is determined by TBLPTRL<5:0>. The process for physically writing data to the program memory array is discussed in **Section 7.5 "Writing to Flash Program Memory"**.

7.2 Control Registers

Several control registers are used in conjunction with the TBLRD and TBLWT instructions. Those are:

- EECON1 register
- EECON2 register
- TABLAT register
- TBLPTR registers

7.2.1 EECON1 AND EECON2 REGISTERS

The EECON1 register (Register 7-1) is the control register for memory accesses. The EECON2 register is not a physical register; it is used exclusively in the memory write and erase sequences. Reading EECON2 will read all '0's.

The WPROG bit, when set, will allow programming two bytes per word on the execution of the WR command. If this bit is cleared, the WR command will result in programming on a block of 64 bytes.

The FREE bit, when set, will allow a program memory erase operation. When FREE is set, the erase operation is initiated on the next WR command. When FREE is clear, only writes are enabled.

The WREN bit, when set, will allow a write operation. On power-up, the WREN bit is clear. The WRERR bit is set in hardware when the WR bit is set and cleared when the internal programming timer expires and the write operation is complete.

Note:	During normal operation, the WRERR is read as '1'. This can indicate that a write operation was prematurely terminated by a Reset, or a write operation was attempted improperly.

The WR control bit initiates write operations. The bit cannot be cleared, only set, in software. It is cleared in hardware at the completion of the write operation.

© 2011 Microchip Technology Inc.

REGISTER 7-1: EECON1: EEPROM CONTROL REGISTER 1 (ACCESS FA6h)

U-0	U-0	R/W-0	R/W-0	R/W-x	R/W-0	R/S-0	U-0
—	—	WPROG	FREE	WRERR	WREN	WR	—
bit 7							bit 0

Legend:	S = Settable bit (cannot be cleared in software)		
R = Readable bit	W = Writable bit	U = Unimplemented bit, read as '0'	
-n = Value at POR	'1' = Bit is set	'0' = Bit is cleared	x = Bit is unknown

bit 7-6 **Unimplemented:** Read as '0'

bit 5 **WPROG:** One Word-Wide Program bit
1 = Program 2 bytes on the next WR command
0 = Program 64 bytes on the next WR command

bit 4 **FREE:** Flash Erase Enable bit
1 = Perform an erase operation on the next WR command (cleared by hardware after completion of erase)
0 = Perform write only

bit 3 **WRERR:** Flash Program Error Flag bit
1 = A write operation is prematurely terminated (any Reset during self-timed programming in normal operation or an improper write attempt)
0 = The write operation is complete

bit 2 **WREN:** Flash Program Write Enable bit
1 = Allows write cycles to Flash program memory
0 = Inhibits write cycles to Flash program memory

bit 1 **WR:** Write Control bit
1 = Initiates a program memory erase cycle or write cycle
(The operation is self-timed and the bit is cleared by hardware once the write is complete. The WR bit can only be set (not cleared) in software.)
0 = Write cycle is complete

bit 0 **Unimplemented:** Read as '0'

7.2.2 TABLE LATCH REGISTER (TABLAT)

The Table Latch (TABLAT) is an 8-bit register mapped into the Special Function Register (SFR) space. The Table Latch register is used to hold 8-bit data during data transfers between program memory and data RAM.

7.2.3 TABLE POINTER REGISTER (TBLPTR)

The Table Pointer (TBLPTR) register addresses a byte within the program memory. The TBLPTR comprises three SFR registers: Table Pointer Upper Byte, Table Pointer High Byte and Table Pointer Low Byte (TBLPTRU:TBLPTRH:TBLPTRL). These three registers join to form a 22-bit wide pointer. The low-order 21 bits allow the device to address up to 2 Mbytes of program memory space. The 22nd bit allows access to the device ID, the user ID and the Configuration bits.

The Table Pointer register, TBLPTR, is used by the TBLRD and TBLWT instructions. These instructions can update the TBLPTR in one of four ways based on the table operation.

Table 7-1 provides these operations. These operations on the TBLPTR only affect the low-order 21 bits.

7.2.4 TABLE POINTER BOUNDARIES

TBLPTR is used in reads, writes and erases of the Flash program memory.

When a TBLRD is executed, all 22 bits of the TBLPTR determine which byte is read from program memory into TABLAT.

When a TBLWT is executed, the seven Least Significant bits (LSbs) of the Table Pointer register (TBLPTR<6:0>) determine which of the 64 program memory holding registers is written to. When the timed write to program memory begins (via the WR bit), the 12 Most Significant bits (MSbs) of the TBLPTR (TBLPTR<21:10>) determine which program memory block of 1024 bytes is written to. For more information, see **Section 7.5 "Writing to Flash Program Memory"**.

When an erase of program memory is executed, the 12 MSbs of the Table Pointer register point to the 1024-byte block that will be erased. The LSbs are ignored.

Figure 7-3 illustrates the relevant boundaries of TBLPTR based on Flash program memory operations.

TABLE 7-1: TABLE POINTER OPERATIONS WITH TBLRD AND TBLWT INSTRUCTIONS

Example	Operation on Table Pointer
TBLRD* TBLWT*	TBLPTR is not modified
TBLRD*+ TBLWT*+	TBLPTR is incremented after the read/write
TBLRD*- TBLWT*-	TBLPTR is decremented after the read/write
TBLRD+* TBLWT+*	TBLPTR is incremented before the read/write

FIGURE 7-3: TABLE POINTER BOUNDARIES BASED ON OPERATION

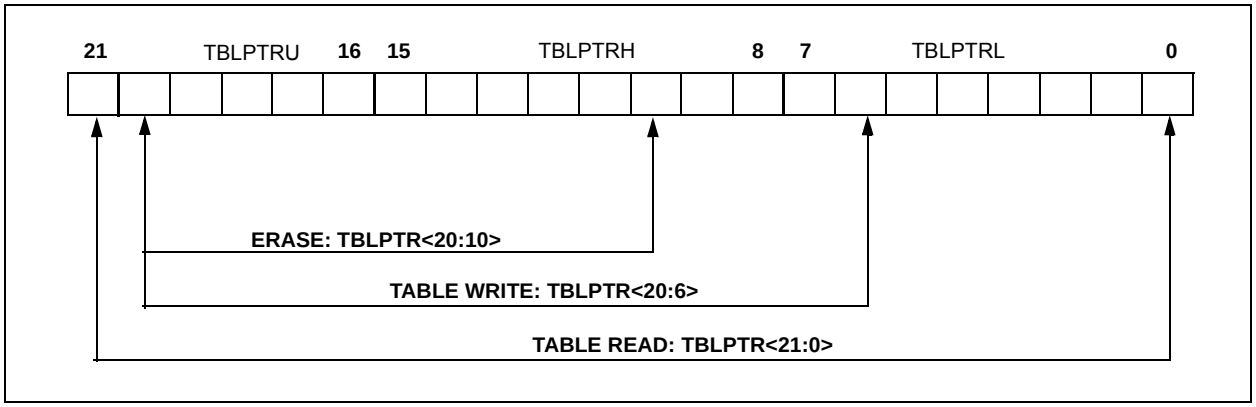

© 2011 Microchip Technology Inc.

7.3 Reading the Flash Program Memory

The TBLRD instruction is used to retrieve data from program memory and places it into data RAM. Table reads from program memory are performed one byte at a time.

TBLPTR points to a byte address in program space. Executing TBLRD places the byte pointed to into TABLAT. In addition, TBLPTR can be modified automatically for the next table read operation.

The internal program memory is typically organized by words. The LSb of the address selects between the high and low bytes of the word.

Figure 7-4 illustrates the interface between the internal program memory and the TABLAT.

FIGURE 7-4: READS FROM FLASH PROGRAM MEMORY

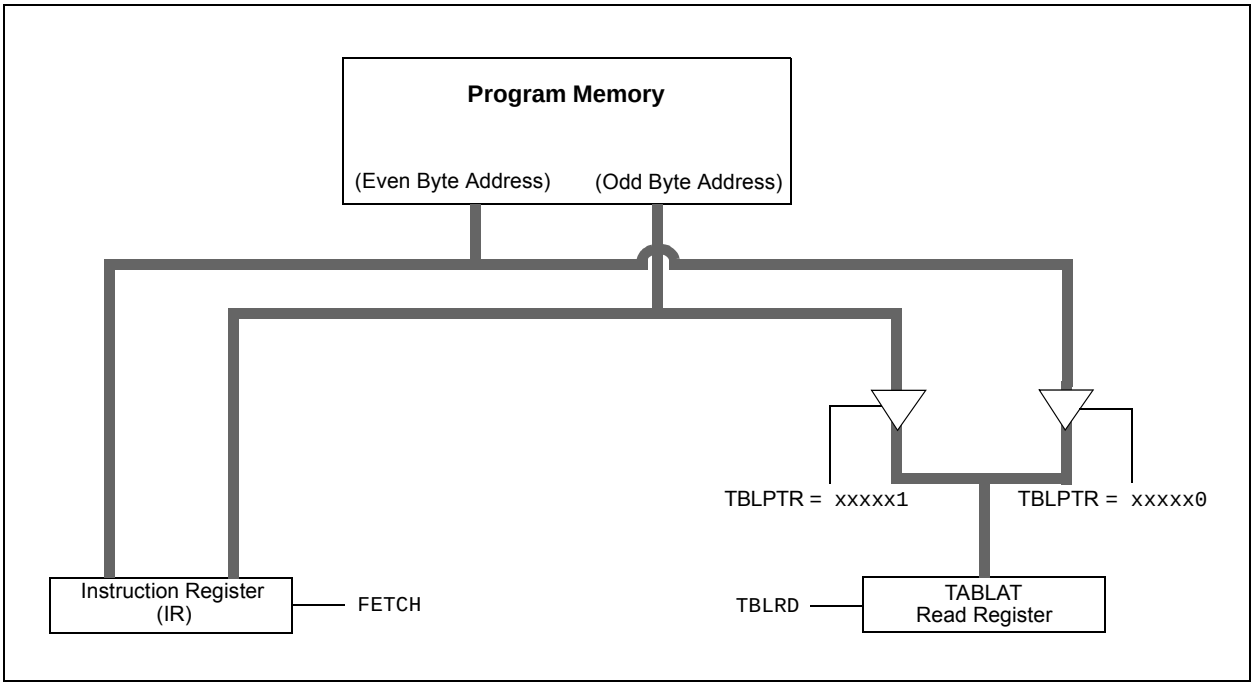

EXAMPLE 7-1: READING A FLASH PROGRAM MEMORY WORD

```
            MOVLW   CODE_ADDR_UPPER       ; Load TBLPTR with the base
            MOVWF   TBLPTRU               ; address of the word
            MOVLW   CODE_ADDR_HIGH
            MOVWF   TBLPTRH
            MOVLW   CODE_ADDR_LOW
            MOVWF   TBLPTRL
READ_WORD
            TBLRD*+                       ; read into TABLAT and increment
            MOVF    TABLAT, W             ; get data
            MOVWF   WORD_EVEN
            TBLRD*+                       ; read into TABLAT and increment
            MOVF    TABLAT, W             ; get data
            MOVWF   WORD_ODD
```

7.4 Erasing Flash Program Memory

The minimum erase block is 512 words or 1024 bytes. Only through the use of an external programmer, or through ICSP control, can larger blocks of program memory be bulk erased. Word erase in the Flash array is not supported.

When initiating an erase sequence from the microcontroller itself, a block of 1024 bytes of program memory is erased. The Most Significant 12 bits of the TBLPTR<21:10> point to the block being erased; TBLPTR<9:0> are ignored.

The EECON1 register commands the erase operation. The WREN bit must be set to enable write operations. The FREE bit is set to select an erase operation. For protection, the write initiate sequence for EECON2 must be used.

A long write is necessary for erasing the internal Flash. Instruction execution is halted while in a long write cycle. The long write will be terminated by the internal programming timer.

7.4.1 FLASH PROGRAM MEMORY ERASE SEQUENCE

The sequence of events for erasing a block of internal program memory location is:

1. Load Table Pointer register with the address of the row being erased.
2. Set the WREN and FREE bits (EECON1<2,4>) to enable the erase operation.
3. Disable interrupts.
4. Write 0x55 to EECON2.
5. Write 0xAA to EECON2.
6. Set the WR bit; this will begin the erase cycle.
7. The CPU will stall for the duration of the erase for TIE (see Parameter D133B).
8. Re-enable interrupts.

EXAMPLE 7-2: ERASING FLASH PROGRAM MEMORY

```
                MOVLW   CODE_ADDR_UPPER     ; load TBLPTR with the base
                MOVWF   TBLPTRU             ; address of the memory block
                MOVLW   CODE_ADDR_HIGH
                MOVWF   TBLPTRH
                MOVLW   CODE_ADDR_LOW
                MOVWF   TBLPTRL
    ERASE_ROW
                BSF     EECON1, WREN        ; enable write to memory
                BSF     EECON1, FREE        ; enable Erase operation
                BCF     INTCON, GIE         ; disable interrupts
Required        MOVLW   0x55
Sequence        MOVWF   EECON2              ; write 0x55
                MOVLW   0xAA
                MOVWF   EECON2              ; write 0xAA
                BSF     EECON1, WR          ; start erase (CPU stall)
                BSF     INTCON, GIE         ; re-enable interrupts
```


© 2011 Microchip Technology Inc.

7.5 Writing to Flash Program Memory

The programming block is 32 words or 64 bytes. Programming one word or 2 bytes at a time is also supported.

Table writes are used internally to load the holding registers needed to program the Flash memory. There are 64 holding registers used by the table writes for programming.

Since the Table Latch (TABLAT) is only a single byte, the TBLWT instruction may need to be executed 64 times for each programming operation (if WPROG = 0). All of the table write operations will essentially be short writes because only the holding registers are written. At the end of updating the 64 holding registers, the EECON1 register must be written to in order to start the programming operation with a long write.

The long write is necessary for programming the internal Flash. Instruction execution is halted while in a long write cycle. The long write will be terminated by the internal programming timer.

The on-chip timer controls the write time. The write/erase voltages are generated by an on-chip charge pump, rated to operate over the voltage range of the device.

Note 1: Unlike previous PIC® devices, devices of the PIC18F46J50 family do not reset the holding registers after a write occurs. The holding registers must be cleared or overwritten before a programming sequence.

2: To maintain the endurance of the program memory cells, each Flash byte should not be programmed more than once between erase operations. Before attempting to modify the contents of the target cell a second time, an erase of the target page, or a bulk erase of the entire memory, must be performed.

FIGURE 7-5: TABLE WRITES TO FLASH PROGRAM MEMORY

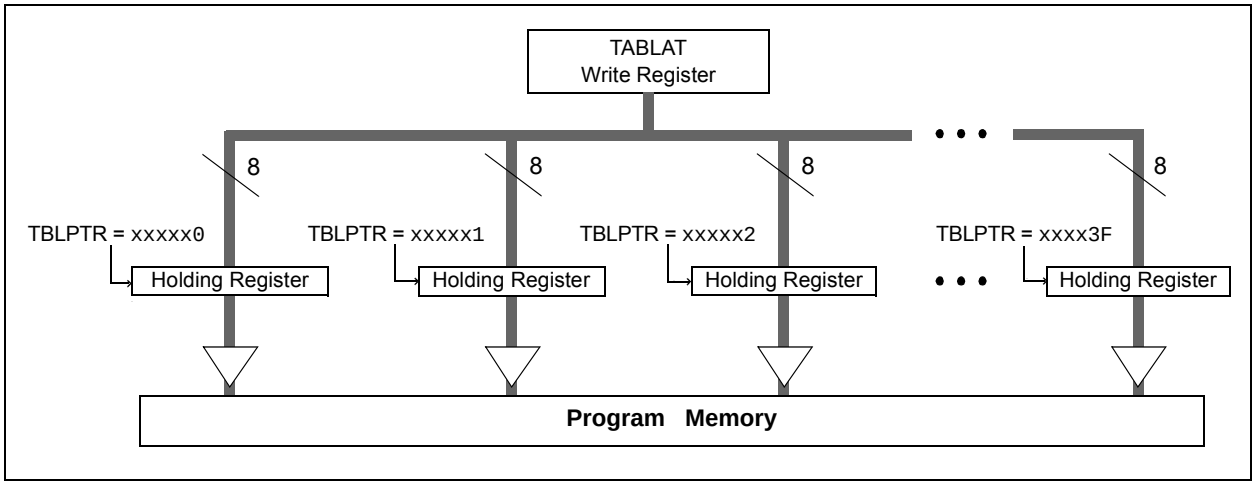

7.5.1 FLASH PROGRAM MEMORY WRITE SEQUENCE

The sequence of events for programming an internal program memory location should be:

1. Read 1024 bytes into RAM.
2. Update data values in RAM as necessary.
3. Load the Table Pointer register with the address being erased.
4. Execute the erase procedure.
5. Load the Table Pointer register with the address of the first byte being written, minus 1.
6. Write the 64 bytes into the holding registers with auto-increment.
7. Set the WREN bit (EECON1<2>) to enable byte writes.
8. Disable interrupts.
9. Write 0x55 to EECON2.
10. Write 0xAA to EECON2.
11. Set the WR bit. This will begin the write cycle.
12. The CPU will stall for the duration of the write for TIW (see Parameter D133A).
13. Re-enable interrupts.
14. Repeat Steps 6 through 13 until all 1024 bytes are written to program memory.
15. Verify the memory (table read).

An example of the required code is provided in Example 7-3 on the following page.

Note: Before setting the WR bit, the Table Pointer address needs to be within the intended address range of the 64 bytes in the holding register.

EXAMPLE 7-3: WRITING TO FLASH PROGRAM MEMORY

```
                    MOVLW   CODE_ADDR_UPPER       ; Load TBLPTR with the base address
                    MOVWF   TBLPTRU               ; of the memory block, minus 1
                    MOVLW   CODE_ADDR_HIGH
                    MOVWF   TBLPTRH
                    MOVLW   CODE_ADDR_LOW
                    MOVWF   TBLPTRL
ERASE_BLOCK
                    BSF     EECON1, WREN          ; enable write to memory
                    BSF     EECON1, FREE          ; enable Erase operation
                    BCF     INTCON, GIE           ; disable interrupts
                    MOVLW   0x55
                    MOVWF   EECON2                ; write 0x55
                    MOVLW   0xAA
                    MOVWF   EECON2                ; write 0xAA
                    BSF     EECON1, WR            ; start erase (CPU stall)
                    BSF     INTCON, GIE           ; re-enable interrupts
                    MOVLW   D'16'
                    MOVWF   WRITE_COUNTER         ; Need to write 16 blocks of 64 to write
                                                  ; one erase block of 1024
RESTART_BUFFER
                    MOVLW   D'64'
                    MOVWF   COUNTER
                    MOVLW   BUFFER_ADDR_HIGH      ; point to buffer
                    MOVWF   FSR0H
                    MOVLW   BUFFER_ADDR_LOW
                    MOVWF   FSR0L
FILL_BUFFER
                    ...                           ; read the new data from I2C, SPI,
                                                  ; PSP, USART, etc.
WRITE_BUFFER
                    MOVLW   D’64’                 ; number of bytes in holding register
                    MOVWF   COUNTER
WRITE_BYTE_TO_HREGS
                    MOVFF   POSTINC0, WREG        ; get low byte of buffer data
                    MOVWF   TABLAT                ; present data to table latch
                    TBLWT+*                       ; write data, perform a short write
                                                  ; to internal TBLWT holding register.
                    DECFSZ  COUNTER               ; loop until buffers are full
                    BRA     WRITE_BYTE_TO_HREGS
PROGRAM_MEMORY
                    BSF     EECON1, WREN          ; enable write to memory
                    BCF     INTCON, GIE           ; disable interrupts
                    MOVLW   0x55
   Required         MOVWF   EECON2                ; write 0xAA
   Sequence         MOVLW   0xAA
                    MOVWF   EECON2                ; write 0xAA
                    BSF     EECON1, WR            ; start program (CPU stall)
                    BSF     INTCON, GIE           ; re-enable interrupts
                    BCF     EECON1, WREN          ; disable write to memory

                    DECFSZ  WRITE_COUNTER         ; done with one write cycle
                    BRA     RESTART_BUFFER        ; if not done replacing the erase block
```


© 2011 Microchip Technology Inc.

7.5.2 FLASH PROGRAM MEMORY WRITE SEQUENCE (WORD PROGRAMMING)

The PIC18F46J50 family of devices has a feature that allows programming a single word (two bytes). This feature is enabled when the WPROG bit is set. If the memory location is already erased, the following sequence is required to enable this feature:

1. Load the Table Pointer register with the address of the data to be written. (It must be an even address.)
2. Write the 2 bytes into the holding registers by performing table writes. (Do not post-increment on the second table write.)
3. Set the WREN bit (EECON1<2>) to enable writes and the WPROG bit (EECON1<5>) to select Word Write mode.
4. Disable interrupts.
5. Write 0x55 to EECON2.
6. Write 0xAA to EECON2.
7. Set the WR bit; this will begin the write cycle.
8. The CPU will stall for the duration of the write for TIW (see Parameter D133A).
9. Re-enable interrupts.

EXAMPLE 7-4: SINGLE-WORD WRITE TO FLASH PROGRAM MEMORY

```
                MOVLW   CODE_ADDR_UPPER       ; Load TBLPTR with the base address
                MOVWF   TBLPTRU
                MOVLW   CODE_ADDR_HIGH
                MOVWF   TBLPTRH
                MOVLW   CODE_ADDR_LOW         ; The table pointer must be loaded with an even
                                                address
                MOVWF   TBLPTRL

                MOVLW   DATA0                 ; LSB of word to be written
                MOVWF   TABLAT
                TBLWT*+
                MOVLW   DATA1                 ; MSB of word to be written
                MOVWF   TABLAT
                TBLWT*                        ; The last table write must not increment the table
                                                pointer! The table pointer needs to point to the
                                                MSB before starting the write operation.


PROGRAM_MEMORY
                BSF     EECON1, WPROG         ; enable single word write
                BSF     EECON1, WREN          ; enable write to memory
                BCF     INTCON, GIE           ; disable interrupts
                MOVLW   0x55
    Required    MOVWF   EECON2                ; write 0x55
    Sequence    MOVLW   0xAA
                MOVWF   EECON2                ; write 0xAA
                BSF     EECON1, WR            ; start program (CPU stall)
                BSF     INTCON, GIE           ; re-enable interrupts
                BCF     EECON1, WPROG         ; disable single word write
                BCF     EECON1, WREN          ; disable write to memory
```

7.5.3 WRITE VERIFY

Depending on the application, good programming practice may dictate that the value written to the memory should be verified against the original value. This should be used in applications where excessive writes can stress bits near the specification limit.

7.5.4 UNEXPECTED TERMINATION OF WRITE OPERATION

If a write is terminated by an unplanned event, such as loss of power or an unexpected Reset, the memory location just programmed should be verified and reprogrammed if needed. If the write operation is interrupted by a $\overline{\text{MCLR}}$ Reset or a WDT time-out Reset during normal operation, the user can check the WRERR bit and rewrite the location(s) as needed.

7.6 Flash Program Operation During Code Protection

See **Section 27.6 "Program Verification and Code Protection"** for details on code protection of Flash program memory.

TABLE 7-2: REGISTERS ASSOCIATED WITH PROGRAM FLASH MEMORY

Name	Bit 7	Bit 6	Bit 5	Bit 4	Bit 3	Bit 2	Bit 1	Bit 0	Reset Values on Page:
TBLPTRU	—	—	bit 21	Program Memory Table Pointer Upper Byte (TBLPTR<20:16>)					69
TBPLTRH	Program Memory Table Pointer High Byte (TBLPTR<15:8>)								69
TBLPTRL	Program Memory Table Pointer Low Byte (TBLPTR<7:0>)								69
TABLAT	Program Memory Table Latch								69
INTCON	GIE/GIEH	PEIE/GIEL	TMR0IE	INT0IE	RBIE	TMR0IF	INT0IF	RBIF	69
EECON2	Program Memory Control Register 2 (not a physical register)								71
EECON1	—	—	WPROG	FREE	WRERR	WREN	WR	—	71

Legend: — = unimplemented, read as '0'. Shaded cells are not used during Flash program memory access.

© 2011 Microchip Technology Inc.

8.0 8 x 8 HARDWARE MULTIPLIER

8.1 Introduction

All PIC18 devices include an 8 x 8 hardware multiplier as part of the ALU. The multiplier performs an unsigned operation and yields a 16-bit result that is stored in the product register pair, PRODH:PRODL. The multiplier's operation does not affect any flags in the STATUS register.

Making multiplication a hardware operation allows it to be completed in a single instruction cycle. This has the advantages of higher computational throughput and reduced code size for multiplication algorithms and allows the PIC18 devices to be used in many applications previously reserved for digital signal processors. Table 8-1 provides a comparison of various hardware and software multiply operations, along with the savings in memory and execution time.

8.2 Operation

Example 8-1 provides the instruction sequence for an 8 x 8 unsigned multiplication. Only one instruction is required when one of the arguments is already loaded in the WREG register.

Example 8-2 provides the instruction sequence for an 8 x 8 signed multiplication. To account for the sign bits of the arguments, each argument's Most Significant bit (MSb) is tested and the appropriate subtractions are done.

EXAMPLE 8-1: 8 x 8 UNSIGNED MULTIPLY ROUTINE

```
MOVF    ARG1, W     ;
MULWF   ARG2        ; ARG1 * ARG2 ->
                    ; PRODH:PRODL
```

EXAMPLE 8-2: 8 x 8 SIGNED MULTIPLY ROUTINE

```
MOVF    ARG1, W
MULWF   ARG2        ; ARG1 * ARG2 ->
                    ; PRODH:PRODL
BTFSC   ARG2, SB    ; Test Sign Bit
SUBWF   PRODH, F    ; PRODH = PRODH
                    ;         - ARG1
MOVF    ARG2, W
BTFSC   ARG1, SB    ; Test Sign Bit
SUBWF   PRODH, F    ; PRODH = PRODH
                    ;         - ARG2
```

TABLE 8-1: PERFORMANCE COMPARISON FOR VARIOUS MULTIPLY OPERATIONS

Routine	Multiply Method	Program Memory (Words)	Cycles (Max)	Time		
				@ 48 MHz	@ 10 MHz	@ 4 MHz
8 x 8 unsigned	Without hardware multiply	13	69	5.7 µs	27.6 µs	69 µs
	Hardware multiply	1	1	83.3 ns	400 ns	1 µs
8 x 8 signed	Without hardware multiply	33	91	7.5 µs	36.4 µs	91 µs
	Hardware multiply	6	6	500 ns	2.4 µs	6 µs
16 x 16 unsigned	Without hardware multiply	21	242	20.1 µs	96.8 µs	242 µs
	Hardware multiply	28	28	2.3 µs	11.2 µs	28 µs
16 x 16 signed	Without hardware multiply	52	254	21.6 µs	102.6 µs	254 µs
	Hardware multiply	35	40	3.3 µs	16.0 µs	40 µs

© 2011 Microchip Technology Inc.

Example 8-3 provides the instruction sequence for a 16 x 16 unsigned multiplication. Equation 8-1 provides the algorithm that is used. The 32-bit result is stored in four registers (RES<3:0>).

EQUATION 8-1: 16 x 16 UNSIGNED MULTIPLICATION ALGORITHM

$$
\begin{aligned}
RES3:RES0 &= ARG1H:ARG1L \cdot ARG2H:ARG2L \\
&= (ARG1H \cdot ARG2H \cdot 2^{16}) + \\
&\quad (ARG1H \cdot ARG2L \cdot 2^{8}) + \\
&\quad (ARG1L \cdot ARG2H \cdot 2^{8}) + \\
&\quad (ARG1L \cdot ARG2L)
\end{aligned}
$$

EXAMPLE 8-3: 16 x 16 UNSIGNED MULTIPLY ROUTINE

```
    MOVF    ARG1L, W
    MULWF   ARG2L           ; ARG1L * ARG2L->
                            ; PRODH:PRODL
    MOVFF   PRODH, RES1     ;
    MOVFF   PRODL, RES0     ;

    MOVF    ARG1H, W
    MULWF   ARG2H           ; ARG1H * ARG2H->
                            ; PRODH:PRODL
    MOVFF   PRODH, RES3     ;
    MOVFF   PRODL, RES2     ;

    MOVF    ARG1L, W
    MULWF   ARG2H           ; ARG1L * ARG2H->
                            ; PRODH:PRODL
    MOVF    PRODL, W        ;
    ADDWF   RES1, F         ; Add cross
    MOVF    PRODH, W        ; products
    ADDWFC  RES2, F         ;
    CLRF    WREG            ;
    ADDWFC  RES3, F         ;

    MOVF    ARG1H, W        ;
    MULWF   ARG2L           ; ARG1H * ARG2L->
                            ; PRODH:PRODL
    MOVF    PRODL, W        ;
    ADDWF   RES1, F         ; Add cross
    MOVF    PRODH, W        ; products
    ADDWFC  RES2, F         ;
    CLRF    WREG            ;
    ADDWFC  RES3, F         ;
```

Example 8-4 provides the sequence to do a 16 x 16 signed multiply. Equation 8-2 provides the algorithm used. The 32-bit result is stored in four registers (RES<3:0>). To account for the sign bits of the arguments, the MSb for each argument pair is tested and the appropriate subtractions are done.

EQUATION 8-2: 16 x 16 SIGNED MULTIPLICATION ALGORITHM

$$
\begin{aligned}
RES3:RES0 &= ARG1H:ARG1L \cdot ARG2H:ARG2L \\
&= (ARG1H \cdot ARG2H \cdot 2^{16}) + \\
&\quad (ARG1H \cdot ARG2L \cdot 2^{8}) + \\
&\quad (ARG1L \cdot ARG2H \cdot 2^{8}) + \\
&\quad (ARG1L \cdot ARG2L) + \\
&\quad (-1 \cdot ARG2H\langle 7\rangle \cdot ARG1H:ARG1L \cdot 2^{16}) + \\
&\quad (-1 \cdot ARG1H\langle 7\rangle \cdot ARG2H:ARG2L \cdot 2^{16})
\end{aligned}
$$

EXAMPLE 8-4: 16 x 16 SIGNED MULTIPLY ROUTINE

```
    MOVF    ARG1L, W
    MULWF   ARG2L           ; ARG1L * ARG2L ->
                            ; PRODH:PRODL
    MOVFF   PRODH, RES1     ;
    MOVFF   PRODL, RES0     ;

    MOVF    ARG1H, W
    MULWF   ARG2H           ; ARG1H * ARG2H ->
                            ; PRODH:PRODL
    MOVFF   PRODH, RES3     ;
    MOVFF   PRODL, RES2     ;

    MOVF    ARG1L, W
    MULWF   ARG2H           ; ARG1L * ARG2H ->
                            ; PRODH:PRODL
    MOVF    PRODL, W        ;
    ADDWF   RES1, F         ; Add cross
    MOVF    PRODH, W        ; products
    ADDWFC  RES2, F         ;
    CLRF    WREG            ;
    ADDWFC  RES3, F         ;

    MOVF    ARG1H, W        ;
    MULWF   ARG2L           ; ARG1H * ARG2L ->
                            ; PRODH:PRODL
    MOVF    PRODL, W        ;
    ADDWF   RES1, F         ; Add cross
    MOVF    PRODH, W        ; products
    ADDWFC  RES2, F         ;
    CLRF    WREG            ;
    ADDWFC  RES3, F         ;

    BTFSS   ARG2H, 7        ; ARG2H:ARG2L neg?
    BRA     SIGN_ARG1       ; no, check ARG1
    MOVF    ARG1L, W        ;
    SUBWF   RES2            ;
    MOVF    ARG1H, W        ;
    SUBWFB  RES3

SIGN_ARG1
    BTFSS   ARG1H, 7        ; ARG1H:ARG1L neg?
    BRA     CONT_CODE       ; no, done
    MOVF    ARG2L, W        ;
    SUBWF   RES2            ;
    MOVF    ARG2H, W        ;
    SUBWFB  RES3

CONT_CODE
   :
```


© 2011 Microchip Technology Inc.

9.0 INTERRUPTS

Devices of the PIC18F46J50 family have multiple interrupt sources and an interrupt priority feature that allows most interrupt sources to be assigned a high-priority level or a low-priority level. The high-priority interrupt vector is at 0008h and the low-priority interrupt vector is at 0018h. High-priority interrupt events will interrupt any low-priority interrupts that may be in progress.

There are 13 registers, which are used to control interrupt operation. These registers are:

- RCON
- INTCON
- INTCON2
- INTCON3
- PIR1, PIR2, PIR3
- PIE1, PIE2, PIE3
- IPR1, IPR2, IPR3

It is recommended that the Microchip header files supplied with MPLAB® IDE be used for the symbolic bit names in these registers. This allows the assembler/compiler to automatically take care of the placement of these bits within the specified register.

In general, interrupt sources have three bits to control their operation. They are:

- **Flag bit** to indicate that an interrupt event occurred
- **Enable bit** that allows program execution to branch to the interrupt vector address when the flag bit is set
- **Priority bit** to select high priority or low priority

The interrupt priority feature is enabled by setting the IPEN bit (RCON<7>). When interrupt priority is enabled, there are two bits which enable interrupts globally. Setting the GIEH bit (INTCON<7>) enables all interrupts that have the priority bit set (high priority). Setting the GIEH and GIEL bits (INTCON<7:6>) enables interrupts that have the priority bit cleared (low priority). When the interrupt flag, enable bit and appropriate Global Interrupt Enable bits are set, the interrupt will vector immediately to address, 0008h or 0018h, depending on the priority bit setting. Individual interrupts can be disabled through their corresponding enable bits.

When the IPEN bit is cleared (default state), the interrupt priority feature is disabled and interrupts are compatible with PIC® mid-range devices. In Compatibility mode, the interrupt priority bits for each source have no effect. INTCON<6> is the PEIE bit, which enables/disables all peripheral interrupt sources. INTCON<7> is the GIE bit, which enables/disables all interrupt sources. All interrupts branch to address, 0008h, in Compatibility mode.

When an interrupt is responded to, the Global Interrupt Enable bit is automatically cleared by hardware to disable further interrupts. If the IPEN bit is cleared, this is the GIE bit. If interrupt priority levels are used, this will be either the GIEH bit, if the interrupt was configured for high-priority, or the GIEL bit, if the interrupt was configured for low-priority. When executing in the interrupt context, application firmware should not attempt to manually re-enable the respective GIEH or GIEL bit that was cleared in hardware. High-priority interrupt sources can interrupt a low-priority interrupt. Low-priority interrupts are not processed while high-priority interrupts are in progress.

When an interrupt occurs, the return address is pushed onto the stack and the PC is loaded with the interrupt vector address (0008h or 0018h). Once in the Interrupt Service Routine (ISR), the source(s) of the interrupt can be determined by polling the interrupt flag bits. The interrupt flag bit, or individual PIEx enable bit, must be cleared in software before returning from the interrupt handler to avoid recursive interrupts.

The “return from interrupt” instruction, `RETFIE`, exits the interrupt routine and sets the GIE bit (GIEH or GIEL if priority levels are used), which re-enables interrupts.

For external interrupt events, such as the INTx pins or the PORTB input change interrupt, the interrupt latency will be three to four instruction cycles. The exact latency is the same for one or two-cycle instructions. Individual interrupt flag bits are set regardless of the status of their corresponding enable bit or the GIE bit.

Note:	Do not use the `MOVFF` instruction to modify any of the interrupt control registers while **any** interrupt is enabled. Doing so may cause erratic microcontroller behavior.

FIGURE 9-1: PIC18F46J50 FAMILY INTERRUPT LOGIC

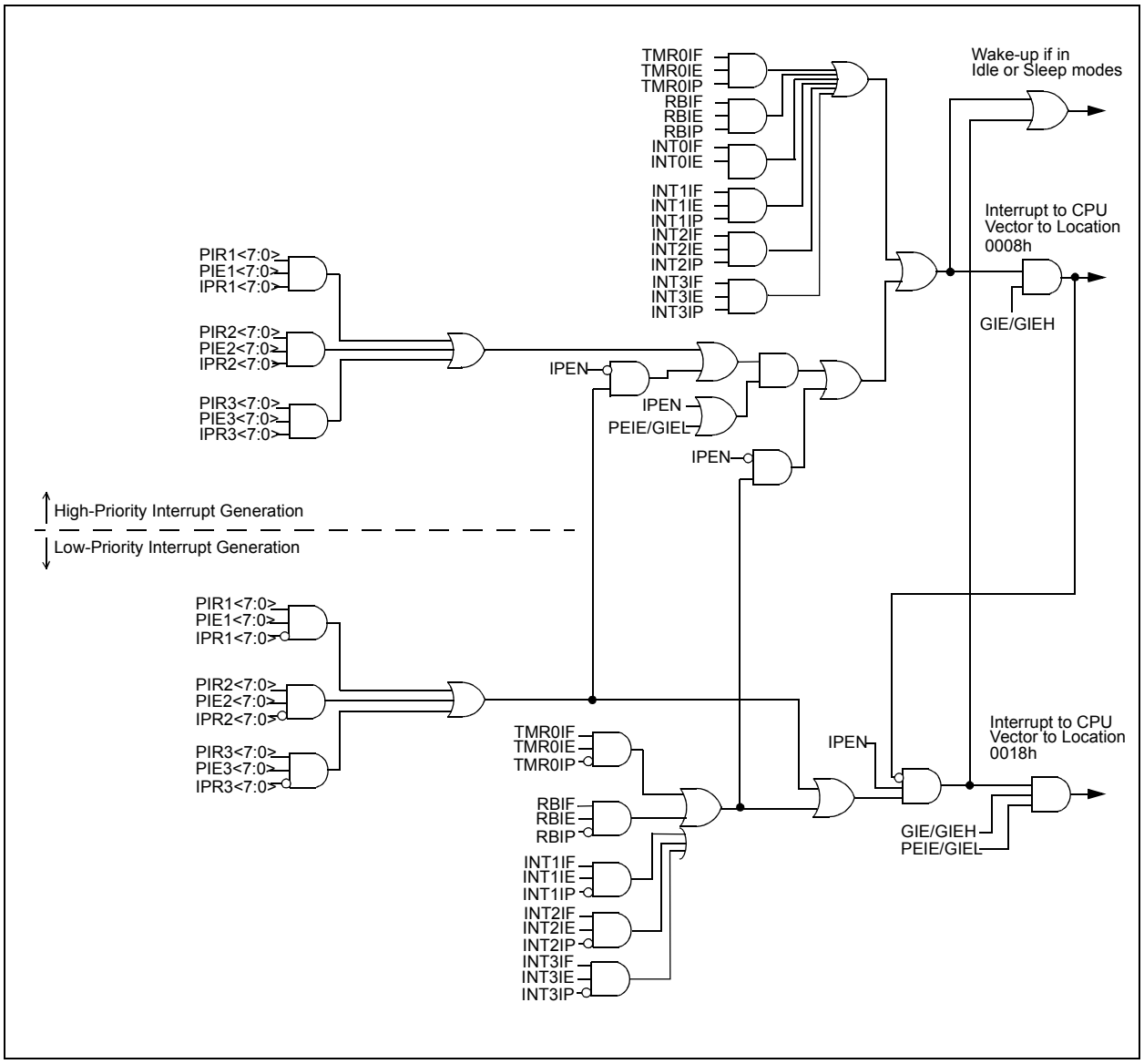

© 2011 Microchip Technology Inc.

9.1 INTCON Registers

The INTCON registers are readable and writable registers, which contain various enable, priority and flag bits.

Note: Interrupt flag bits are set when an interrupt condition occurs regardless of the state of its corresponding enable bit or the Global Interrupt Enable bit. User software should ensure the appropriate interrupt flag bits are clear prior to enabling an interrupt. This feature allows for software polling.

REGISTER 9-1: INTCON: INTERRUPT CONTROL REGISTER (ACCESS FF2h)

R/W-0	R/W-0	R/W-0	R/W-0	R/W-0	R/W-0	R/W-0	R/W-x
GIE/GIEH	PEIE/GIEL	TMR0IE	INT0IE	RBIE	TMR0IF	INT0IF	RBIF(1)
bit 7							bit 0

Legend:			
R = Readable bit	W = Writable bit	U = Unimplemented bit, read as '0'	
-n = Value at POR	'1' = Bit is set	'0' = Bit is cleared	x = Bit is unknown

bit 7 **GIE/GIEH:** Global Interrupt Enable bit
When IPEN = 0:
1 = Enables all unmasked interrupts
0 = Disables all interrupts
When IPEN = 1:
1 = Enables all high-priority interrupts (also enables low-priority interrupts when GIEL is also set)
0 = Disables all interrupts

bit 6 **PEIE/GIEL:** Peripheral/Low-Priority Interrupt Enable bit
When IPEN = 0:
1 = Enables all unmasked peripheral interrupts (when GIE is also set)
0 = Disables all peripheral interrupts
When IPEN = 1:
1 = Enables all interrupts configured for low priority (when GIEH is also set)
0 = Disables all interrupts configured for low priority

bit 5 **TMR0IE:** TMR0 Overflow Interrupt Enable bit
1 = Enables the TMR0 overflow interrupt
0 = Disables the TMR0 overflow interrupt

bit 4 **INT0IE:** INT0 External Interrupt Enable bit
1 = Enables the INT0 external interrupt
0 = Disables the INT0 external interrupt

bit 3 **RBIE:** RB Port Change Interrupt Enable bit
1 = Enables the RB port change interrupt
0 = Disables the RB port change interrupt

bit 2 **TMR0IF:** TMR0 Overflow Interrupt Flag bit
1 = TMR0 register has overflowed (must be cleared in software)
0 = TMR0 register did not overflow

bit 1 **INT0IF:** INT0 External Interrupt Flag bit
1 = The INT0 external interrupt occurred (must be cleared in software)
0 = The INT0 external interrupt did not occur

bit 0 **RBIF:** RB Port Change Interrupt Flag bit(1)
1 = At least one of the RB<7:4> pins changed state (must be cleared in software)
0 = None of the RB<7:4> pins have changed state

Note 1: A mismatch condition will continue to set this bit. Reading PORTB and waiting 1 TCY will end the mismatch condition and allow the bit to be cleared.

REGISTER 9-2: INTCON2: INTERRUPT CONTROL REGISTER 2 (ACCESS FF1h)

R/W-1	R/W-1	R/W-1	R/W-1	R/W-1	R/W-1	R/W-1	R/W-1
$\overline{\text{RBPU}}$	INTEDG0	INTEDG1	INTEDG2	INTEDG3	TMR0IP	INT3IP	RBIP
bit 7							bit 0

Legend:			
R = Readable bit	W = Writable bit	U = Unimplemented bit, read as '0'	
-n = Value at POR	'1' = Bit is set	'0' = Bit is cleared	x = Bit is unknown

bit 7 **$\overline{\text{RBPU}}$:** PORTB Pull-up Enable bit
1 = All PORTB pull-ups are disabled
0 = PORTB pull-ups are enabled by individual PORT TRIS values

bit 6 **INTEDG0:** External Interrupt 0 Edge Select bit
1 = Interrupt on rising edge
0 = Interrupt on falling edge

bit 5 **INTEDG1:** External Interrupt 1 Edge Select bit
1 = Interrupt on rising edge
0 = Interrupt on falling edge

bit 4 **INTEDG2:** External Interrupt 2 Edge Select bit
1 = Interrupt on rising edge
0 = Interrupt on falling edge

bit 3 **INTEDG3:** External Interrupt 3 Edge Select bit
1 = Interrupt on rising edge
0 = Interrupt on falling edge

bit 2 **TMR0IP:** TMR0 Overflow Interrupt Priority bit
1 = High priority
0 = Low priority

bit 1 **INT3IP:** INT3 External Interrupt Priority bit
1 = High priority
0 = Low priority

bit 0 **RBIP:** RB Port Change Interrupt Priority bit
1 = High priority
0 = Low priority

Note: Interrupt flag bits are set when an interrupt condition occurs, regardless of the state of its corresponding enable bit or the Global Interrupt Enable bit. User software should ensure the appropriate interrupt flag bits are clear prior to enabling an interrupt. This feature allows for software polling.

© 2011 Microchip Technology Inc.

REGISTER 9-3: INTCON3: INTERRUPT CONTROL REGISTER 3 (ACCESS FF0h)

R/W-1	R/W-1	R/W-0	R/W-0	R/W-0	R/W-0	R/W-0	R/W-0
INT2IP	INT1IP	INT3IE	INT2IE	INT1IE	INT3IF	INT2IF	INT1IF
bit 7							bit 0

Legend:			
R = Readable bit	W = Writable bit	U = Unimplemented bit, read as '0'	
-n = Value at POR	'1' = Bit is set	'0' = Bit is cleared	x = Bit is unknown

bit 7 **INT2IP:** INT2 External Interrupt Priority bit
1 = High priority
0 = Low priority

bit 6 **INT1IP:** INT1 External Interrupt Priority bit
1 = High priority
0 = Low priority

bit 5 **INT3IE:** INT3 External Interrupt Enable bit
1 = Enables the INT3 external interrupt
0 = Disables the INT3 external interrupt

bit 4 **INT2IE:** INT2 External Interrupt Enable bit
1 = Enables the INT2 external interrupt
0 = Disables the INT2 external interrupt

bit 3 **INT1IE:** INT1 External Interrupt Enable bit
1 = Enables the INT1 external interrupt
0 = Disables the INT1 external interrupt

bit 2 **INT3IF:** INT3 External Interrupt Flag bit
1 = The INT3 external interrupt occurred (must be cleared in software)
0 = The INT3 external interrupt did not occur

bit 1 **INT2IF:** INT2 External Interrupt Flag bit
1 = The INT2 external interrupt occurred (must be cleared in software)
0 = The INT2 external interrupt did not occur

bit 0 **INT1IF:** INT1 External Interrupt Flag bit
1 = The INT1 external interrupt occurred (must be cleared in software)
0 = The INT1 external interrupt did not occur

Note: Interrupt flag bits are set when an interrupt condition occurs, regardless of the state of its corresponding enable bit or the Global Interrupt Enable bit. User software should ensure the appropriate interrupt flag bits are clear prior to enabling an interrupt. This feature allows for software polling.

9.2 PIR Registers

The PIR registers contain the individual flag bits for the peripheral interrupts. Due to the number of peripheral interrupt sources, there are three Peripheral Interrupt Request (Flag) registers (PIR1, PIR2, PIR3).

Note 1: Interrupt flag bits are set when an interrupt condition occurs, regardless of the state of its corresponding enable bit or the Global Interrupt Enable bit, GIE (INTCON<7>).

2: User software should ensure the appropriate interrupt flag bits are cleared prior to enabling an interrupt and after servicing that interrupt.

REGISTER 9-4: PIR1: PERIPHERAL INTERRUPT REQUEST (FLAG) REGISTER 1 (ACCESS F9Eh)

R/W-0	R/W-0	R-0	R-0	R/W-0	R/W-0	R/W-0	R/W-0
PMPIF(1)	ADIF	RC1IF	TX1IF	SSP1IF	CCP1IF	TMR2IF	TMR1IF
bit 7							bit 0

Legend:			
R = Readable bit	W = Writable bit	U = Unimplemented bit, read as '0'	
-n = Value at POR	'1' = Bit is set	'0' = Bit is cleared	x = Bit is unknown

bit 7 **PMPIF:** Parallel Master Port Read/Write Interrupt Flag bit(1)
1 = A read or a write operation has taken place (must be cleared in software)
0 = No read or write has occurred

bit 6 **ADIF:** A/D Converter Interrupt Flag bit
1 = An A/D conversion completed (must be cleared in software)
0 = The A/D conversion is not complete

bit 5 **RC1IF:** EUSART1 Receive Interrupt Flag bit
1 = The EUSART1 receive buffer, RCREG1, is full (cleared when RCREG1 is read)
0 = The EUSART1 receive buffer is empty

bit 4 **TX1IF:** EUSART1 Transmit Interrupt Flag bit
1 = The EUSART1 transmit buffer, TXREG1, is empty (cleared when TXREG1 is written)
0 = The EUSART1 transmit buffer is full

bit 3 **SSP1IF:** Master Synchronous Serial Port 1 Interrupt Flag bit
1 = The transmission/reception is complete (must be cleared in software)
0 = Waiting to transmit/receive

bit 2 **CCP1IF:** ECCP1 Interrupt Flag bit
Capture mode:
1 = A TMR1/TMR3 register capture occurred (must be cleared in software)
0 = No TMR1/TMR3 register capture occurred
Compare mode:
1 = A TMR1/TMR3 register compare match occurred (must be cleared in software)
0 = No TMR1/TMR3 register compare match occurred
PWM mode:
Unused in this mode.

bit 1 **TMR2IF:** TMR2 to PR2 Match Interrupt Flag bit
1 = TMR2 to PR2 match occurred (must be cleared in software)
0 = No TMR2 to PR2 match occurred

bit 0 **TMR1IF:** TMR1 Overflow Interrupt Flag bit
1 = TMR1 register overflowed (must be cleared in software)
0 = TMR1 register did not overflow

Note 1: These bits are unimplemented on 28-pin devices.

© 2011 Microchip Technology Inc.

REGISTER 9-5: PIR2: PERIPHERAL INTERRUPT REQUEST (FLAG) REGISTER 2 (ACCESS FA1h)

R/W-0	R/W-0	R/W-0	R/W-0	R/W-0	R/W-0	R/W-0	R/W-0
OSCFIF	CM2IF	CM1IF	USBIF	BCL1IF	HLVDIF	TMR3IF	CCP2IF
bit 7							bit 0

Legend:			
R = Readable bit	W = Writable bit	U = Unimplemented bit, read as '0'	
-n = Value at POR	'1' = Bit is set	'0' = Bit is cleared	x = Bit is unknown

bit 7 **OSCFIF:** Oscillator Fail Interrupt Flag bit
1 = Device oscillator failed, clock input has changed to INTOSC (must be cleared in software)
0 = Device clock is operating

bit 6 **CM2IF:** Comparator 2 Interrupt Flag bit
1 = Comparator input has changed (must be cleared in software)
0 = Comparator input has not changed

bit 5 **CM1IF:** Comparator 1 Interrupt Flag bit
1 = Comparator input has changed (must be cleared in software)
0 = Comparator input has not changed

bit 4 **USBIF:** USB Interrupt Flag bit
1 = USB has requested an interrupt (must be cleared in software)
0 = No USB interrupt request

bit 3 **BCL1IF:** Bus Collision Interrupt Flag bit (MSSP1 module)
1 = A bus collision occurred (must be cleared in software)
0 = No bus collision occurred

bit 2 **HLVDIF/LVDIF:** High/Low-Voltage Detect (HLVD) Interrupt Flag bit
1 = A High/Low-Voltage Detect condition occurred (must be cleared in software)
0 = An HLVD event has not occurred

bit 1 **TMR3IF:** TMR3 Overflow Interrupt Flag bit
1 = TMR3 register overflowed (must be cleared in software)
0 = TMR3 register did not overflow

bit 0 **CCP2IF:** ECCP2 Interrupt Flag bit
Capture mode:
1 = A TMR1/TMR3 register capture occurred (must be cleared in software)
0 = No TMR1/TMR3 register capture occurred
Compare mode:
1 = A TMR1/TMR3 register compare match occurred (must be cleared in software)
0 = No TMR1/TMR3 register compare match occurred
PWM mode:
Unused in this mode.

REGISTER 9-6: PIR3: PERIPHERAL INTERRUPT REQUEST (FLAG) REGISTER 3 (ACCESS FA4h)

R/W-0	R/W-0	R-0	R-0	R/W-0	R/W-0	R/W-0	R/W-0
SSP2IF	BCL2IF	RC2IF	TX2IF	TMR4IF	CTMUIF	TMR3GIF	RTCCIF
bit 7							bit 0

Legend:			
R = Readable bit	W = Writable bit	U = Unimplemented bit, read as '0'	
-n = Value at POR	'1' = Bit is set	'0' = Bit is cleared	x = Bit is unknown

bit 7 **SSP2IF:** Master Synchronous Serial Port 2 Interrupt Flag bit
1 = The transmission/reception is complete (must be cleared in software)
0 = Waiting to transmit/receive

bit 6 **BCL2IF:** Bus Collision Interrupt Flag bit (MSSP2 module)
1 = A bus collision occurred (must be cleared in software)
0 = No bus collision occurred

bit 5 **RC2IF:** EUSART2 Receive Interrupt Flag bit
1 = The EUSART2 receive buffer, RCREG2, is full (cleared when RCREG2 is read)
0 = The EUSART2 receive buffer is empty

bit 4 **TX2IF:** EUSART2 Transmit Interrupt Flag bit
1 = The EUSART2 transmit buffer, TXREG2, is empty (cleared when TXREG2 is written)
0 = The EUSART2 transmit buffer is full

bit 3 **TMR4IF:** TMR4 to PR4 Match Interrupt Flag bit
1 = TMR4 to PR4 match occurred (must be cleared in software)
0 = No TMR4 to PR4 match occurred

bit 2 **CTMUIF:** Charge Time Measurement Unit Interrupt Flag bit
1 = A CTMU event has occurred (must be cleared in software)
0 = CTMU event has not occurred

bit 1 **TMR3GIF:** Timer3 Gate Event Interrupt Flag bit
1 = A Timer3 gate event completed (must be cleared in software)
0 = No Timer3 gate event completed

bit 0 **RTCCIF:** RTCC Interrupt Flag bit
1 = RTCC interrupt occurred (must be cleared in software)
0 = No RTCC interrupt occurred

© 2011 Microchip Technology Inc.

9.3 PIE Registers

The PIE registers contain the individual enable bits for the peripheral interrupts. Due to the number of peripheral interrupt sources, there are three Peripheral Interrupt Enable registers (PIE1, PIE2, PIE3). When IPEN = 0, the PEIE bit must be set to enable any of these peripheral interrupts.

REGISTER 9-7: PIE1: PERIPHERAL INTERRUPT ENABLE REGISTER 1 (ACCESS F9Dh)

R/W-0	R/W-0	R/W-0	R/W-0	R/W-0	R/W-0	R/W-0	R/W-0
PMPIE(1)	ADIE	RC1IE	TX1IE	SSP1IE	CCP1IE	TMR2IE	TMR1IE
bit 7							bit 0

Legend:			
R = Readable bit	W = Writable bit	U = Unimplemented bit, read as '0'	
-n = Value at POR	'1' = Bit is set	'0' = Bit is cleared	x = Bit is unknown

bit 7 **PMPIE:** Parallel Master Port Read/Write Interrupt Enable bit(1)
1 = Enables the PMP read/write interrupt
0 = Disables the PMP read/write interrupt

bit 6 **ADIE:** A/D Converter Interrupt Enable bit
1 = Enables the A/D interrupt
0 = Disables the A/D interrupt

bit 5 **RC1IE:** EUSART1 Receive Interrupt Enable bit
1 = Enables the EUSART1 receive interrupt
0 = Disables the EUSART1 receive interrupt

bit 4 **TX1IE:** EUSART1 Transmit Interrupt Enable bit
1 = Enables the EUSART1 transmit interrupt
0 = Disables the EUSART1 transmit interrupt

bit 3 **SSP1IE:** Master Synchronous Serial Port 1 Interrupt Enable bit
1 = Enables the MSSP1 interrupt
0 = Disables the MSSP1 interrupt

bit 2 **CCP1IE:** ECCP1 Interrupt Enable bit
1 = Enables the ECCP1 interrupt
0 = Disables the ECCP1 interrupt

bit 1 **TMR2IE:** TMR2 to PR2 Match Interrupt Enable bit
1 = Enables the TMR2 to PR2 match interrupt
0 = Disables the TMR2 to PR2 match interrupt

bit 0 **TMR1IE:** TMR1 Overflow Interrupt Enable bit
1 = Enables the TMR1 overflow interrupt
0 = Disables the TMR1 overflow interrupt

Note 1: These bits are unimplemented on 28-pin devices.

REGISTER 9-8: PIE2: PERIPHERAL INTERRUPT ENABLE REGISTER 2 (ACCESS FA0h)

R/W-0	R/W-0	R/W-0	R/W-0	R/W-0	R/W-0	R/W-0	R/W-0
OSCFIE	CM2IE	CM1IE	USBIE	BCL1IE	HLVDIE	TMR3IE	CCP2IE
bit 7							bit 0

Legend:			
R = Readable bit	W = Writable bit	U = Unimplemented bit, read as '0'	
-n = Value at POR	'1' = Bit is set	'0' = Bit is cleared	x = Bit is unknown

bit 7 **OSCFIE:** Oscillator Fail Interrupt Enable bit
1 = Enabled
0 = Disabled

bit 6 **CM2IE:** Comparator 2 Interrupt Enable bit
1 = Enabled
0 = Disabled

bit 5 **CM1IE:** Comparator 1 Interrupt Enable bit
1 = Enabled
0 = Disabled

bit 4 **USBIE:** USB Interrupt Enable bit
1 = Enabled
0 = Disabled

bit 3 **BCL1IE:** Bus Collision Interrupt Enable bit (MSSP1 module)
1 = Enabled
0 = Disabled

bit 2 **HLVDIE:** High/Low-Voltage Detect Interrupt Enable bit
1 = Enabled
0 = Disabled

bit 1 **TMR3IE:** TMR3 Overflow Interrupt Enable bit
1 = Enabled
0 = Disabled

bit 0 **CCP2IE:** ECCP2 Interrupt Enable bit
1 = Enabled
0 = Disabled

© 2011 Microchip Technology Inc.

REGISTER 9-9: PIE3: PERIPHERAL INTERRUPT ENABLE REGISTER 3 (ACCESS FA3h)

R/W-0	R/W-0	R/W-0	R/W-0	R/W-0	R/W-0	R/W-0	R/W-0
SSP2IE	BCL2IE	RC2IE	TX2IE	TMR4IE	CTMUIE	TMR3GIE	RTCCIE
bit 7							bit 0

Legend:			
R = Readable bit	W = Writable bit	U = Unimplemented bit, read as '0'	
-n = Value at POR	'1' = Bit is set	'0' = Bit is cleared	x = Bit is unknown

bit 7 **SSP2IE:** Master Synchronous Serial Port 2 Interrupt Enable bit
1 = Enabled
0 = Disabled

bit 6 **BCL2IE:** Bus Collision Interrupt Enable bit (MSSP2 module)
1 = Enabled
0 = Disabled

bit 5 **RC2IE:** EUSART2 Receive Interrupt Enable bit
1 = Enabled
0 = Disabled

bit 4 **TX2IE:** EUSART2 Transmit Interrupt Enable bit
1 = Enabled
0 = Disabled

bit 3 **TMR4IE:** TMR4 to PR4 Match Interrupt Enable bit
1 = Enabled
0 = Disabled

bit 2 **CTMUIE:** Charge Time Measurement Unit (CTMU) Interrupt Enable bit
1 = Enabled
0 = Disabled

bit 1 **TMR3GIE**: Timer3 Gate Interrupt Enable bit
1 = Enabled
0 = Disabled

bit 0 **RTCCIE**: RTCC Interrupt Enable bit
1 = Enabled
0 = Disabled

9.4 IPR Registers

The IPR registers contain the individual priority bits for the peripheral interrupts. Due to the number of peripheral interrupt sources, there are three Peripheral Interrupt Priority registers (IPR1, IPR2, IPR3). Using the priority bits requires that the Interrupt Priority Enable (IPEN) bit be set.

REGISTER 9-10: IPR1: PERIPHERAL INTERRUPT PRIORITY REGISTER 1 (ACCESS F9Fh)

R/W-1	R/W-1	R/W-1	R/W-1	R/W-1	R/W-1	R/W-1	R/W-1
PMPIP(1)	ADIP	RC1IP	TX1IP	SSP1IP	CCP1IP	TMR2IP	TMR1IP
bit 7							bit 0

Legend:			
R = Readable bit	W = Writable bit	U = Unimplemented bit, read as '0'	
-n = Value at POR	'1' = Bit is set	'0' = Bit is cleared	x = Bit is unknown

bit 7 **PMPIP:** Parallel Master Port Read/Write Interrupt Priority bit(1)
1 = High priority
0 = Low priority

bit 6 **ADIP:** A/D Converter Interrupt Priority bit
1 = High priority
0 = Low priority

bit 5 **RC1IP:** EUSART1 Receive Interrupt Priority bit
1 = High priority
0 = Low priority

bit 4 **TX1IP:** EUSART1 Transmit Interrupt Priority bit
1 = High priority
0 = Low priority

bit 3 **SSP1IP:** Master Synchronous Serial Port Interrupt Priority bit (MSSP1 module)
1 = High priority
0 = Low priority

bit 2 **CCP1IP:** ECCP1 Interrupt Priority bit
1 = High priority
0 = Low priority

bit 1 **TMR2IP:** TMR2 to PR2 Match Interrupt Priority bit
1 = High priority
0 = Low priority

bit 0 **TMR1IP:** TMR1 Overflow Interrupt Priority bit
1 = High priority
0 = Low priority

Note 1: These bits are unimplemented on 28-pin devices.

© 2011 Microchip Technology Inc.

REGISTER 9-11: IPR2: PERIPHERAL INTERRUPT PRIORITY REGISTER 2 (ACCESS FA2h)

R/W-1	R/W-1	R/W-1	R/W-1	R/W-1	R/W-1	R/W-1	R/W-1
OSCFIP	CM2IP	CM1IP	USBIP	BCL1IP	HLVDIP	TMR3IP	CCP2IP
bit 7							bit 0

Legend:			
R = Readable bit	W = Writable bit	U = Unimplemented bit, read as '0'	
-n = Value at POR	'1' = Bit is set	'0' = Bit is cleared	x = Bit is unknown

bit 7 **OSCFIP:** Oscillator Fail Interrupt Priority bit
1 = High priority
0 = Low priority

bit 6 **CM2IP:** Comparator 2 Interrupt Priority bit
1 = High priority
0 = Low priority

bit 5 **C12IP:** Comparator 1 Interrupt Priority bit
1 = High priority
0 = Low priority

bit 4 **USBIP:** USB Interrupt Priority bit
1 = High priority
0 = Low priority

bit 3 **BCL1IP:** Bus Collision Interrupt Priority bit (MSSP1 module)
1 = High priority
0 = Low priority

bit 2 **HLVDIP:** High/Low-Voltage Detect Interrupt Priority bit
1 = High priority
0 = Low priority

bit 1 **TMR3IP:** TMR3 Overflow Interrupt Priority bit
1 = High priority
0 = Low priority

bit 0 **CCP2IP:** ECCP2 Interrupt Priority bit
1 = High priority
0 = Low priority

REGISTER 9-12: IPR3: PERIPHERAL INTERRUPT PRIORITY REGISTER 3 (ACCESS FA5h)

R/W-1	R/W-1	R/W-1	R/W-1	R/W-1	R/W-1	R/W-1	R/W-1
SSP2IP	BCL2IP	RC2IP	TX2IP	TMR4IP	CTMUIP	TMR3GIP	RTCCIP
bit 7							bit 0

Legend:			
R = Readable bit	W = Writable bit	U = Unimplemented bit, read as '0'	
-n = Value at POR	'1' = Bit is set	'0' = Bit is cleared	x = Bit is unknown

bit 7 **SSP2IP:** Master Synchronous Serial Port 2 Interrupt Priority bit
1 = High priority
0 = Low priority

bit 6 **BCL2IP:** Bus Collision Interrupt Priority bit (MSSP2 module)
1 = High priority
0 = Low priority

bit 5 **RC2IP:** EUSART2 Receive Interrupt Priority bit
1 = High priority
0 = Low priority

bit 4 **TX2IP:** EUSART2 Transmit Interrupt Priority bit
1 = High priority
0 = Low priority

bit 3 **TMR4IE:** TMR4 to PR4 Interrupt Priority bit
1 = High priority
0 = Low priority

bit 2 **CTMUIP:** Charge Time Measurement Unit (CTMU) Interrupt Priority bit
1 = High priority
0 = Low priority

bit 1 **TMR3GIP:** Timer3 Gate Interrupt Priority bit
1 = High priority
0 = Low priority

bit 0 **RTCCIP:** RTCC Interrupt Priority bit
1 = High priority
0 = Low priority

© 2011 Microchip Technology Inc.

9.5 RCON Register

The RCON register contains bits used to determine the cause of the last Reset or wake-up from Idle or Sleep mode. RCON also contains the bit that enables interrupt priorities (IPEN).

REGISTER 9-13: RCON: RESET CONTROL REGISTER (ACCESS FD0h)

R/W-0	U-0	R/W-1	R/W-1	R-1	R-1	R/W-0	R/W-0
IPEN	—	$\overline{CM}$	$\overline{RI}$	$\overline{TO}$	$\overline{PD}$	$\overline{POR}$	$\overline{BOR}$
bit 7							bit 0

Legend:			
R = Readable bit	W = Writable bit	U = Unimplemented bit, read as ‘0’	
-n = Value at POR	‘1’ = Bit is set	‘0’ = Bit is cleared	x = Bit is unknown

bit 7 **IPEN:** Interrupt Priority Enable bit
1 = Enable priority levels on interrupts
0 = Disable priority levels on interrupts (PIC16CXXX Compatibility mode)

bit 6 **Unimplemented:** Read as ‘0’

bit 5 **$\overline{CM}$:** Configuration Mismatch Flag bit
For details on bit operation, see Register 5-1.

bit 4 **$\overline{RI}$:** RESET Instruction Flag bit
For details on bit operation, see Register 5-1.

bit 3 **$\overline{TO}$:** Watchdog Timer Time-out Flag bit
For details on bit operation, see Register 5-1.

bit 2 **$\overline{PD}$:** Power-Down Detection Flag bit
For details on bit operation, see Register 5-1.

bit 1 **$\overline{POR}$:** Power-on Reset Status bit
For details on bit operation, see Register 5-1.

bit 0 **$\overline{BOR}$:** Brown-out Reset Status bit
For details on bit operation, see Register 5-1.

9.6 INTx Pin Interrupts

External interrupts on the INT0, INT1, INT2 and INT3 pins are edge-triggered. If the corresponding INTEDGx bit in the INTCON2 register is set (= 1), the interrupt is triggered by a rising edge; if the bit is clear, the trigger is on the falling edge. When a valid edge appears on the INTx pin, the corresponding flag bit and INTxIF are set. This interrupt can be disabled by clearing the corresponding enable bit, INTxIE. Flag bit, INTxIF, must be cleared in software in the Interrupt Service Routine before re-enabling the interrupt.

All external interrupts (INT0, INT1, INT2 and INT3) can wake-up the processor from Sleep and Idle modes if bit, INTxIE, was set prior to going into the power-managed modes. After waking from Sleep or Idle mode, the processor will branch to the interrupt vector if the GIEH (and GIEL if configured for low priority) bit(s) are set. Deep Sleep mode can wake-up from INT0, but the processor will start execution from the Power-on Reset vector rather than branch to the interrupt vector.

Interrupt priority for INT1, INT2 and INT3 is determined by the value contained in the Interrupt Priority bits, INT1IP (INTCON3<6>), INT2IP (INTCON3<7>) and INT3IP (INTCON2<1>). There is no priority bit associated with INT0; it is always a high-priority interrupt source.

9.7 TMR0 Interrupt

In 8-bit mode (which is the default), an overflow in the TMR0 register (FFh → 00h) will set flag bit, TMR0IF. In 16-bit mode, an overflow in the TMR0H:TMR0L register pair (FFFFh → 0000h) will set TMR0IF. The interrupt can be enabled/disabled by setting/clearing enable bit, TMR0IE (INTCON<5>). Interrupt priority for Timer0 is determined by the value contained in the interrupt priority bit, TMR0IP (INTCON2<2>). See **Section 12.0 "Timer0 Module"** for further details on the Timer0 module.

9.8 PORTB Interrupt-on-Change

An input change on PORTB<7:4> sets flag bit, RBIF (INTCON<0>). The interrupt can be enabled/disabled by setting/clearing enable bit, RBIE (INTCON<3>). Interrupt priority for PORTB interrupt-on-change is determined by the value contained in the interrupt priority bit, RBIP (INTCON2<0>).

9.9 Context Saving During Interrupts

During interrupts, the return PC address is saved on the stack. Additionally, the WREG, STATUS and BSR registers are saved on the Fast Return Stack. If a fast return from interrupt is not used (see **Section 6.3 "Data Memory Organization"**), the user may need to save the WREG, STATUS and BSR registers on entry to the Interrupt Service Routine. Depending on the user's application, other registers may also need to be saved. Example 9-1 saves and restores the WREG, STATUS and BSR registers during an Interrupt Service Routine.

EXAMPLE 9-1: SAVING STATUS, WREG AND BSR REGISTERS IN RAM

```
MOVWF   W_TEMP                  ; W_TEMP is in access bank
MOVFF   STATUS, STATUS_TEMP     ; STATUS_TEMP located anywhere
MOVFF   BSR, BSR_TEMP           ; BSR_TEMP located anywhere
;
; USER ISR CODE
;
MOVFF   BSR_TEMP, BSR           ; Restore BSR
MOVF    W_TEMP, W               ; Restore WREG
MOVFF   STATUS_TEMP, STATUS     ; Restore STATUS
```


© 2011 Microchip Technology Inc.

10.0 I/O PORTS

Depending on the device selected and features enabled, there are up to five ports available. Some pins of the I/O ports are multiplexed with an alternate function from the peripheral features on the device. In general, when a peripheral is enabled, that pin may not be used as a general purpose I/O pin.

Each port has three registers for its operation. These registers are:

- TRIS register (Data Direction register)
- PORT register (reads the levels on the pins of the device)
- LAT register (Data Latch)

Pins that are multiplexed with analog functionality (ANx pins) also have ANCON register bits associated with them.

The TRISx registers control which pins should be configured as digital outputs (output buffer enabled) and which pins should be left high-impedance. Writing '0' to a TRIS bit configures the specified pin as a digital output. Writing a '1' to a TRIS bit disables the output driver, so the pin can be used as a digital or analog input. This can be easily remembered by observing that '0' is similar to the letter, O (as in Output), and that '1' is similar to the letter, I (as in Input).

The PORTx registers can be used to read the logic level externally presented on pins that have been configured as digital inputs. If a pin is configured as a digital input, the corresponding port bit will be read as '1' if the externally applied voltage is greater than the V_{IH} level for that pin. If the externally applied voltage is below V_{IL}, then the PORTx bit will read as '0'. If the I/O pin is multiplexed with analog functionality (an ANx pin), then the corresponding PCFG bit, in the appropriate ANCONx register, must also be set, in order to correctly read the externally applied voltage on the pin. See the following information regarding the ANCONx registers.

If the application firmware writes to a PORTx register, this will cause the corresponding LATx register to be updated. It is usually not recommended to perform read-modify-write instructions (ex: BTG, BSF, BCF) on a PORTx register. If the application firmware wishes to change the output state of a pin that has been configured as a digital output (TRIS bit = 0), it is recommended that the firmware use the corresponding LATx register instead.

The LATx registers hold the digital value that is output onto a pin when the pin has been configured as a digital output (TRIS bit = 0). Writing a '1' to the LATx bit will drive the output pin to the logic high output state. Similarly, writing a '0' to the LAT bit will drive the output pin to a logic low output state. It is safe to perform all types of read, write and read-modify-write instructions on the LATx registers.

The ANCONx registers are used to configure pins with ANx analog functionality for either Digital Input or Analog Input mode. Setting a PCFG bit in an ANCONx register enables the digital input buffer, allowing reads from the PORTx register to correctly reflect the externally applied voltage on the digital input pin. If the PCFG bit is clear, the digital input buffer is disabled, to eliminate CMOS input buffer cross conduction currents, when a mid-V_{DD} scale analog voltage is applied to the pin. This allows analog input voltages (between V_{DD} and V_{SS}) to be applied to the pin without increasing the current consumption of the device. If the appropriate PCFG bit in the ANCONx register is not set, this will cause the PORTx register bit for that pin to read as '0', regardless of the actually applied external voltage.

At power-up, the default state of the ANCONx registers is to configure the ANx pins for Analog mode (digital input buffer off). Therefore, to use ANx pins as digital inputs, the application firmware must first update the ANCONx register(s). See **Section 21.0 "10-bit Analog-to-Digital Converter (A/D) Module"** for more details regarding the ANCONx registers.

Figure 10-1 displays a simplified model of a generic I/O port, without the interfaces to other peripherals.

FIGURE 10-1: GENERIC I/O PORT OPERATION

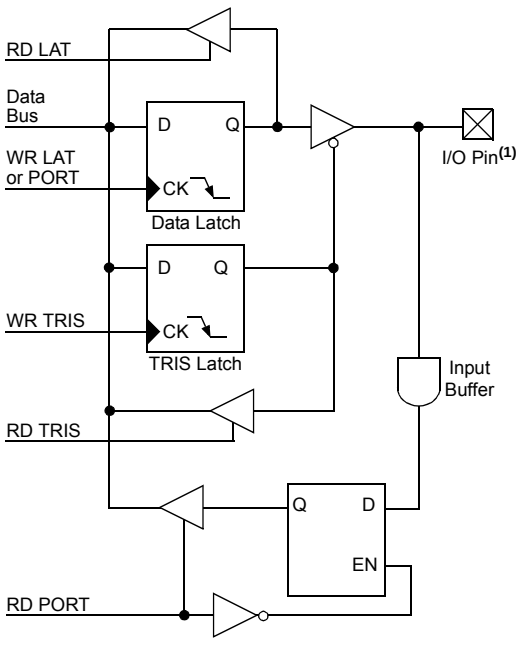

Note 1: I/O pins without 5.5V tolerance have diode protection to V_{DD} and V_{SS}. I/O pins with 5.5V tolerance have diode protection from Vss.

10.1 I/O Port Pin Capabilities

When developing an application, the capabilities of the port pins must be considered. Outputs on some pins have higher output drive strength than others. Similarly, some pins can tolerate higher than VDD input levels.

10.1.1 PIN OUTPUT DRIVE

General purpose output buffers are implemented with CMOS transistors, for rail to rail output capability, when lightly loaded. The output pin drive strengths vary for groups of pins intended to meet the needs for a variety of applications. PORTB and PORTC are designed to drive higher loads, such as LEDs. All other ports are designed for small loads; typically, indication only. Table 10-1 summarizes the output capabilities. Refer to **Section 30.0 "Electrical Characteristics"** for more details.

TABLE 10-1: OUTPUT DRIVE LEVELS

Port	Drive	Description
PORTA (except RA6)	Minimum	Intended for indication.
PORTD		
PORTE		
PORTB	High	Suitable for strong LED drive levels.
PORTC		
PORTA<6>		

10.1.2 INPUT PINS AND VOLTAGE CONSIDERATIONS

The voltage tolerance of pins used as device inputs is dependent on the pin's input function. Pins that are used as digital only inputs are able to handle DC voltages up to 5.5V; a level typical for digital logic circuits. In contrast, pins that also have analog input functions of any kind can only tolerate voltages up to VDD. Voltage excursions beyond VDD on these pins should be avoided. Table 10-2 summarizes the input capabilities. Refer to **Section 30.0 "Electrical Characteristics"** for more details.

TABLE 10-2: INPUT VOLTAGE LEVELS

Port or Pin	Tolerated Input	Description
PORTA<7:0>	VDD	Only VDD input levels are tolerated.
PORTB<3:0>		
PORTC<2:0>		
PORTE<2:0>		
PORTB<7:4>	5.5V	Tolerates input levels above VDD, useful for most standard logic.
PORTC<7:6>		
PORTD<7:0>		
PORTC<5:4>	(USB)	Designed for USB specifications.

© 2011 Microchip Technology Inc.

10.1.3 INTERFACING TO A 5V SYSTEM

Though the V_{DDMAX} of the PIC18F46J50 family is 3.6V, these devices are still capable of interfacing with 5V systems, even if the V_{IH} of the target system is above 3.6V. This is accomplished by adding a pull-up resistor to the port pin (Figure 10-2), clearing the LAT bit for that pin and manipulating the corresponding TRIS bit (Figure 10-1) to either allow the line to be pulled high, or to drive the pin low. Only port pins that are tolerant of voltages up to 5.5V can be used for this type of interface (refer to **Section 10.1.2 "Input Pins and Voltage Considerations"**).

FIGURE 10-2: +5V SYSTEM HARDWARE INTERFACE

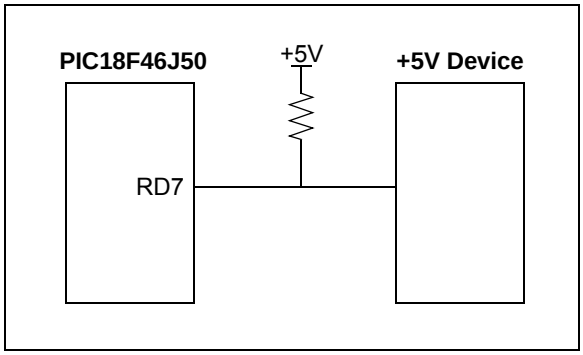

EXAMPLE 10-1: COMMUNICATING WITH THE +5V SYSTEM

```
BCF   LATD, 7   ; set up LAT register so
                ; changing TRIS bit will
                ; drive line low
BCF   TRISD, 7  ; send a 0 to the 5V system
BSF   TRISD, 7  ; send a 1 to the 5V system
```

10.1.4 OPEN-DRAIN OUTPUTS

The output pins for several peripherals are also equipped with a configurable open-drain output option. This allows the peripherals to communicate with external digital logic, operating at a higher voltage level, without the use of level translators.

The open-drain option is implemented on port pins specifically associated with the data and clock outputs of the EUSARTs, the MSSP modules (in SPI mode) and the ECCP modules. It is selectively enabled by setting the open-drain control bit for the corresponding module in the ODCON registers (Register 10-1, Register 10-2 and Register 10-3). Their configuration is discussed in more detail with the individual port where these peripherals are multiplexed. Output functions that are routed through the PPS module may also use the open-drain option. The open-drain functionality will follow the I/O pin assignment in the PPS module.

When the open-drain option is required, the output pin must also be tied through an external pull-up resistor, provided by the user, to a higher voltage level, up to 5.5V (Figure 10-3). When a digital logic high signal is output, it is pulled up to the higher voltage level.

FIGURE 10-3: USING THE OPEN-DRAIN OUTPUT (USART SHOWN AS EXAMPLE)

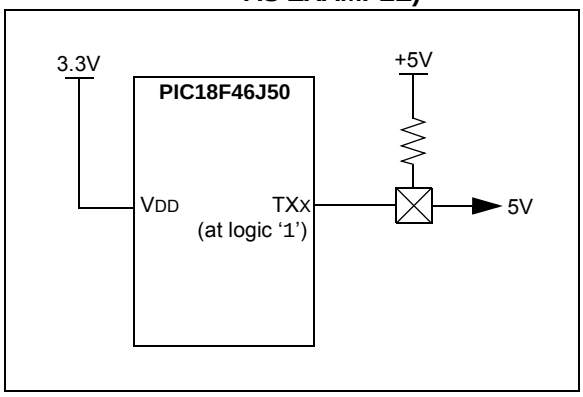

10.1.5 TTL INPUT BUFFER OPTION

Many of the digital I/O ports use Schmitt Trigger (ST) input buffers. While this form of buffering works well with many types of input, some applications may require TTL level signals to interface with external logic devices. This is particularly true for the Parallel Master Port (PMP), which is likely to be interfaced to TTL level logic or memory devices.

The inputs for the PMP can be optionally configured for TTL buffers with the PMPTTL bit in the PADCFG1 register (Register 10-4). Setting this bit configures all data and control input pins for the PMP to use TTL buffers. By default, these PMP inputs use the port's ST buffers.

REGISTER 10-1: ODCON1: PERIPHERAL OPEN-DRAIN CONTROL REGISTER 1 (BANKED F42h)

U-0	U-0	U-0	U-0	U-0	U-0	R/W-0	R/W-0
—	—	—	—	—	—	ECCP2OD	ECCP1OD
bit 7							bit 0

Legend:			
R = Readable bit	W = Writable bit	U = Unimplemented bit, read as ‘0’	
-n = Value at POR	‘1’ = Bit is set	‘0’ = Bit is cleared	x = Bit is unknown

bit 7-2 **Unimplemented:** Read as ‘0’

bit 1 **ECCP2OD:** ECCP2 Open-Drain Output Enable bit
1 = Open-drain capability is enabled
0 = Open-drain capability is disabled

bit 0 **ECCP1OD:** ECCP1 Open-Drain Output Enable bit
1 = Open-drain capability is enabled
0 = Open-drain capability is disabled

REGISTER 10-2: ODCON2: PERIPHERAL OPEN-DRAIN CONTROL REGISTER 2 (BANKED F41h)

U-0	U-0	U-0	U-0	U-0	U-0	R/W-0	R/W-0
—	—	—	—	—	—	U2OD	U1OD
bit 7							bit 0

Legend:			
R = Readable bit	W = Writable bit	U = Unimplemented bit, read as ‘0’	
-n = Value at POR	‘1’ = Bit is set	‘0’ = Bit is cleared	x = Bit is unknown

bit 7-2 **Unimplemented:** Read as ‘0’

bit 1 **U2OD:** USART2 Open-Drain Output Enable bit
1 = Open-drain capability is enabled
0 = Open-drain capability is disabled

bit 0 **U1OD:** USART1 Open-Drain Output Enable bit
1 = Open-drain capability is enabled
0 = Open-drain capability is disabled

© 2011 Microchip Technology Inc.

REGISTER 10-3: ODCON3: PERIPHERAL OPEN-DRAIN CONTROL REGISTER 3 (BANKED F40h)

U-0	U-0	U-0	U-0	U-0	U-0	R/W-0	R/W-0
—	—	—	—	—	—	SPI2OD	SPI1OD
bit 7							bit 0

Legend:			
R = Readable bit	W = Writable bit	U = Unimplemented bit, read as '0'	
-n = Value at POR	'1' = Bit is set	'0' = Bit is cleared	x = Bit is unknown

bit 7-2 **Unimplemented:** Read as '0'

bit 1 **SPI2OD:** SPI2 Open-Drain Output Enable bit
1 = Open-drain capability is enabled
0 = Open-drain capability is disabled

bit 0 **SPI1OD:** SPI1 Open-Drain Output Enable bit
1 = Open-drain capability is enabled
0 = Open-drain capability is disabled

REGISTER 10-4: PADCFG1: PAD CONFIGURATION CONTROL REGISTER 1 (BANKED F3Ch)

U-0	U-0	U-0	U-0	U-0	R/W-0	R/W-0	R/W-0
—	—	—	—	—	RTSECSEL1(1)	RTSECSEL0(1)	PMPTTL
bit 7							bit 0

Legend:			
R = Readable bit	W = Writable bit	U = Unimplemented bit, read as '0'	
-n = Value at POR	'1' = Bit is set	'0' = Bit is cleared	x = Bit is unknown

bit 7-3 **Unimplemented:** Read as '0'

bit 2-1 **RTSECSEL<1:0>:** RTCC Seconds Clock Output Select bits(1)
11 = Reserved; do not use
10 = RTCC source clock is selected for the RTCC pin (can be INTRC, T1OSC or T1CKI, depending upon the RTCOSC (CONFIG3L<1>) and T1OSCEN (T1CON<3>) bit settings)
01 = RTCC seconds clock is selected for the RTCC pin
00 = RTCC alarm pulse is selected for the RTCC pin

bit 0 **PMPTTL:** PMP Module TTL Input Buffer Select bit
1 = PMP module uses TTL input buffers
0 = PMP module uses Schmitt Trigger input buffers

Note 1: To enable the actual RTCC output, the RTCOE (RTCCFG<2>) bit needs to be set.

10.2 PORTA, TRISA and LATA Registers

PORTA is a 7-bit wide, bidirectional port. It may also function as a 5-bit or 6-bit port, depending on the oscillator mode selected. Setting a TRISA bit (= 1) will make the corresponding PORTA pin an input (i.e., put the corresponding output driver in a High-Impedance mode). Clearing a TRISA bit (= 0) will make the corresponding PORTA pin an output (i.e., put the contents of the output latch on the selected pin).

Reading the PORTA register reads the status of the pins, whereas writing to it, will write to the port latch.

The Data Latch (LATA) register is also memory mapped. Read-modify-write operations on the LATA register read and write the latched output value for PORTA.

Most PORTA pins are multiplexed with analog (ANx) functionality. In order to use the analog capable pins as digital inputs, the corresponding PCFG bits in the ANCON0 register must be set.

Pins, RA0 through RA3, may also be used as comparator inputs by setting the appropriate bits in the CMxCON registers and configuring the pins as analog inputs.

Note:	On a Power-on Reset (POR), RA5 and RA<3:0> are configured as analog inputs and read as '0'.

All PORTA pins have full CMOS output drivers.

The TRISA register controls the direction of the PORTA pins, even when they are being used as analog inputs.

EXAMPLE 10-2: INITIALIZING PORTA

```
CLRF    LATA              ;Clearing the PORTA latches
                          ;will cause the pins to drive
                          ;low if configured as outputs
MOVLW   0x1F              ;Configure AN0-AN4 pins
MOVFF   WREG,ANCON0       ;for digital input mode
MOVLW   0xCF              ;Example value used to
                          ;initialize data direction
MOVWF   TRISA             ;Set RA<3:0> as inputs
                          ;RA4 is unimplemented
                          ;RA5 as output
                          ;RA6 and RA7 as inputs
                          ;(unless overridden by osc settings)
```


© 2011 Microchip Technology Inc.

TABLE 10-3: PORTA I/O SUMMARY

Pin	Function	TRIS Setting	I/O	I/O Type	Description
RA0/AN0/C1INA/ ULPWU/PMA6/ RP0	RA0	1	I	TTL	PORTA<0> data input; disabled when analog input is enabled.
		0	O	DIG	LATA<0> data output; not affected by analog input.
	AN0	1	I	ANA	A/D Input Channel 0 and Comparator C1- input. Default input configuration on POR; does not affect digital output.
	C1INA	1	I	ANA	Comparator 1 Input A.
	ULPWU	1	I	ANA	Ultra Low-Power Wake-up input.
	PMA6(1)	0	O	DIG	Parallel Master Port address.
	RP0	1	I	ST	Remappable Peripheral Pin 0 input.
		0	O	DIG	Remappable Peripheral Pin 0 output.
RA1/AN1/C2INA/ PMA7/RP1	RA1	1	I	TTL	PORTA<1> data input; disabled when analog input is enabled.
		0	O	DIG	LATA<1> data output; not affected by analog input.
	AN1	1	I	ANA	A/D Input Channel 1 and Comparator C2- input. Default input configuration on POR; does not affect digital output.
	C2INA	1	I	ANA	Comparator 1 Input A.
	PMA7(1)	0	O	DIG	Parallel Master Port address.
	RP1	1	I	ST	Remappable Peripheral Pin 1 input.
		0	O	DIG	Remappable Peripheral Pin 1 output
RA2/AN2/ VREF-/CVREF/ C2INB	RA2	0	O	DIG	LATA<2> data output; not affected by analog input. Disabled when CVREF output is enabled.
		1	I	TTL	PORTA<2> data input. Disabled when analog functions are enabled; disabled when CVREF output is enabled.
	AN2	1	I	ANA	A/D Input Channel 2 and Comparator C2+ input. Default input configuration on POR; not affected by analog output.
	VREF-	1	I	ANA	A/D and comparator voltage reference low input.
	CVREF	x	O	ANA	Comparator voltage reference output. Enabling this feature disables digital I/O.
	C2INB	I	I	ANA	Comparator 2 Input B.
		0	O	ANA	CTMU pulse generator charger for the C2INB comparator input.
RA3/AN3/VREF+/ C1INB	RA3	0	O	DIG	LATA<3> data output; not affected by analog input.
		1	I	TTL	PORTA<3> data input; disabled when analog input is enabled.
	AN3	1	I	ANA	A/D Input Channel 3 and Comparator C1+ input. Default input configuration on POR.
	VREF+	1	I	ANA	A/D and comparator voltage reference high input.
	C1INB	1	I	ANA	Comparator 1 Input B

Legend: DIG = Digital level output; TTL = TTL input buffer; ST = Schmitt Trigger input buffer; ANA = Analog level input/output; x = Don't care (TRIS bit does not affect port direction or is overridden for this option)

Note 1: This bit is only available on 44-pin devices.

TABLE 10-3: PORTA I/O SUMMARY (CONTINUED)

Pin	Function	TRIS Setting	I/O	I/O Type	Description
RA5/AN4/$\overline{SS1}$/ HLVDIN/RCV/ RP2	RA5	0	O	DIG	LATA<5> data output; not affected by analog input.
		1	I	TTL	PORTA<5> data input; disabled when analog input is enabled.
	AN4	1	I	ANA	A/D Input Channel 4. Default configuration on POR.
	$\overline{SS1}$	1	I	TTL	Slave select input for MSSP1.
	HLVDIN	1	I	ANA	High/Low-Voltage Detect external trip point reference input.
	RCV	1	I	TTL	External USB transceiver RCV input.
	RP2	1	I	ST	Remappable Peripheral Pin 2 input.
		0	O	DIG	Remappable Peripheral Pin 2 output.
OSC2/CLKO/ RA6	OSC2	x	O	ANA	Main oscillator feedback output connection (HS mode).
	CLKO	x	O	DIG	System cycle clock output (FOSC/4) in RC and EC Oscillator modes.
	RA6	1	I	TTL	PORTA<6> data input.
		0	O	DIG	LATA<6> data output.
OSC1/CLKI/RA7	OSC1	1	I	ANA	Main oscillator input connection.
	CLKI	1	I	ANA	Main clock input connection.
	RA7	1	I	TTL	PORTA<6> data input.
		0	O	DIG	LATA<6> data output.

Legend: DIG = Digital level output; TTL = TTL input buffer; ST = Schmitt Trigger input buffer; ANA = Analog level input/output; x = Don't care (TRIS bit does not affect port direction or is overridden for this option)

Note 1: This bit is only available on 44-pin devices.

TABLE 10-4: SUMMARY OF REGISTERS ASSOCIATED WITH PORTA

Name	Bit 7	Bit 6	Bit 5	Bit 4	Bit 3	Bit 2	Bit 1	Bit 0	Reset Values on Page
PORTA	RA7	RA6	RA5	—	RA3	RA2	RA1	RA0	87
LATA	LAT7	LAT6	LAT5	—	LAT3	LAT2	LAT1	LAT0	92
TRISA	TRIS7	TRIS6	TRISA5	—	TRISA3	TRISA2	TRISA1	TRISA0	92
ANCON0	PCFG7(1)	PCFG6(1)	PCFG5(1)	PCFG4	PCFG3	PCFG2	PCFG1	PCFG0	90
CMxCON	CON	COE	CPOL	EVPOL1	EVPOL0	CREF	CCH1	CCH0	90
CVRCON	CVREN	CVROE	CVRR	r	CVR3	CVR2	CVR1	CVR0	93

Legend: — = unimplemented, read as '0', r = reserved. Shaded cells are not used by PORTA.

Note 1: These bits are only available on 44-pin devices.

© 2011 Microchip Technology Inc.

10.3 PORTB, TRISB and LATB Registers

PORTB is an 8-bit wide, bidirectional port. The corresponding Data Direction register is TRISB. Setting a TRISB bit (= 1) will make the corresponding PORTB pin an input (i.e., put the corresponding output driver in a High-Impedance mode). Clearing a TRISB bit (= 0) will make the corresponding PORTB pin an output (i.e., put the contents of the output latch on the selected pin).

The Data Latch register (LATB) is also memory mapped. Read-modify-write operations on the LATB register read and write the latched output value for PORTB.

Each of the PORTB pins has a weak internal pull-up. A single control bit can turn on all the pull-ups. This is performed by clearing bit, $\overline{\text{RBPU}}$ (INTCON2<7>). The weak pull-up is automatically turned off when the port pin is configured as an output. The pull-ups are disabled on a POR. The integrated weak pull-ups consist of a semiconductor structure similar to, but somewhat different, from a discrete resistor. On an unloaded I/O pin, the weak pull-ups are intended to provide logic high indication, but will not necessarily pull the pin all the way to V_{DD} levels.

Note: On a POR, the RB<3:0> bits are configured as analog inputs by default and read as '0'; RB<7:4> bits are configured as digital inputs.

Four of the PORTB pins (RB<7:4>) have an interrupt-on-change feature. Only pins configured as inputs can cause this interrupt to occur (i.e., any RB<7:4> pin configured as an output is excluded from the interrupt-on-change comparison). The input pins (of RB<7:4>) are compared with the old value latched on the last read of PORTB. The "mismatch" outputs of RB<7:4> are ORed together to generate the RB Port Change Interrupt with Flag bit, RBIF (INTCON<0>).

This interrupt can wake the device from Sleep mode or any of the Idle modes. Application software can clear the interrupt flag by following these steps:

1. Any read or write of PORTB (except with the MOVFF (ANY), PORTB instruction).
2. Wait one instruction cycle (such as executing a NOP instruction).
3. Clear flag bit, RBIF.

A mismatch condition continues to set flag bit, RBIF. Reading PORTB will end the mismatch condition and allow flag bit, RBIF, to be cleared after one instruction cycle of delay.

The interrupt-on-change feature is recommended for wake-up on key depression operation and operations where PORTB is only used for the interrupt-on-change feature. Polling of PORTB is not recommended while using the interrupt-on-change feature.

The RB5 pin is multiplexed with the Timer0 module clock input and one of the comparator outputs to become the RB5/PMA0/KBI1/SDI1/SDA1/RP8 pin.

EXAMPLE 10-3: INITIALIZING PORTB

```
MOVLW       0x08                        ; Initialize output data
MOVWF       LATB                        ; latch values for digital
                                        ; output pins.
MOVLB       0x0F                        ; ANCONx registers are
                                        ; not in access bank
BSF         ANCON1, PCFG12, BANKED      ; Configure RB0/AN12 for digital input mode
BCF         ANCON1, PCFG10, BANKED      ; Configure RB1/AN10 for analog input mode
MOVLW       0xC3                        ; RB0 configured as digital input
MOVWF       TRISB                       ; RB1 configured as analog input
                                        ; RB2 configured as output low
                                        ; RB3 configured as output high
                                        ; RB4 configured as output low
                                        ; RB5 configured as output low
                                        ; RB6 configured as digital input
                                        ; RB7 configured as digital input
```

TABLE 10-5: PORTB I/O SUMMARY

Pin	Function	TRIS Setting	I/O	I/O Type	Description
RB0/AN12/ INT0/RP3	RB0	1	I	TTL	PORTB<0> data input; weak pull-up when $\overline{\text{RBPU}}$ bit is cleared. Disabled when analog input is enabled.(1)
		0	O	DIG	LATB<0> data output; not affected by analog input.
	AN12	1	I	ANA	A/D Input Channel 12.(1)
	INT0	1	I	ST	External Interrupt 0 input.
	RP3	1	I	ST	Remappable Peripheral Pin 3 input.
		0	O	DIG	Remappable Peripheral Pin 3 output.
RB1/AN10/ PMBE/RTCC/ RP4	RB1	1	I	TTL	PORTB<1> data input; weak pull-up when $\overline{\text{RBPU}}$ bit is cleared. Disabled when analog input is enabled.(1)
		0	O	DIG	LATB<1> data output; not affected by analog input.
	AN10	1	I	ANA	A/D Input Channel 10.(1)
	PMBE(3)	0	O	DIG	Parallel Master Port byte enable output.
	RTCC	0	O	DIG	Real-Time Clock Calender output.
	RP4	1	I	ST	Remappable Peripheral Pin 4 input.
		0	O	DIG	Remappable Peripheral Pin 4 output.
RB2/AN8/ CTED1/PMA3/ VMO/REFO/ RP5	RB2	1	I	TTL	PORTB<2> data input; weak pull-up when $\overline{\text{RBPU}}$ bit is cleared. Disabled when analog input is enabled.(1)
		0	O	DIG	LATB<2> data output; not affected by analog input.
	AN8	1	I	ANA	A/D Input Channel 8.(1)
	CTED1	1	I	ST	CTMU Edge 1 input.
	PMA3(3)	0	O	DIG	Parallel Master Port address.
	VMO	0	O	DIG	External USB transceiver D – data output.
	REFO	0	O	DIG	Reference output clock.
	RP5	1	I	ST	Remappable Peripheral Pin 5 input.
		0	O	DIG	Remappable Peripheral Pin 5 output.
RB3/AN9/ CTED2/PMA2/ VPO/RP6	RB3	0	O	DIG	LATB<3> data output; not affected by analog input.
		1	I	TTL	PORTB<3> data input; weak pull-up when $\overline{\text{RBPU}}$ bit is cleared. Disabled when analog input is enabled.(1)
	AN9	1	I	ANA	A/D Input Channel 9.(1)
	CTED2	1	I	ST	CTMU Edge 2 input.
	PMA2(3)	0	O	DIG	Parallel Master Port address.
	VPO	0	I	DIG	External USB transceiver D+ data output.
	RP6	1	I	ST	Remappable Peripheral Pin 6 input.
		0	O	DIG	Remappable Peripheral Pin 6 output.

Legend: DIG = Digital level output; TTL = TTL input buffer; ST = Schmitt Trigger input buffer; ANA = Analog level input/output; x = Don't care (TRIS bit does not affect port direction or is overridden for this option)

Note 1: Pins are configured as analog inputs by default on POR. Using these pins for digital inputs requires setting the appropriate bits in the ANCONx register first.

2: All other pin functions are disabled when ICSP™ or MPLAB® ICD are enabled.

3: This functionality is only available on 44-pin devices.

© 2011 Microchip Technology Inc.

TABLE 10-5: PORTB I/O SUMMARY (CONTINUED)

Pin	Function	TRIS Setting	I/O	I/O Type	Description
RB4/PMA1/ KBI0/SCK1/ SCL1/RP7	RB4	0	O	DIG	LATB<4> data output; not affected by analog input.
		1	I	TTL	PORTB<4> data input; weak pull-up when $\overline{\text{RBPU}}$ bit is cleared. Disabled when analog input is enabled.(1)
	PMA1(3)	1	I	ST/TTL	Parallel Slave Port Address input.
		0	O	DIG	Parallel Master Port Address output.
	KBI0	1	I	TTL	Interrupt-on-change pin.
	SCK1	1	I	ST	SPI clock input (MSSP1 module).
		0	O	DIG	SPI clock output (MSSP1 module).
	SCL1	1	I	I^2C/ SMBus	I^2C™ clock input (MSSP1 module).
		0	O	I^2C	I^2C clock output (MSSP1 module).
	RP7	1	I	ST	Remappable Peripheral Pin 7 input.
		0	O	DIG	Remappable Peripheral Pin 7 output.
RB5/PMA0/ KBI1/SDI1/ SDA1/RP8	RB5	0	O	DIG	LATB<5> data output.
		1	I	TTL	PORTB<5> data input; weak pull-up when $\overline{\text{RBPU}}$ bit is cleared.
	KBI1	1	I	TTL	Interrupt-on-change pin.
	PMA0(3)	1	I	ST/TTL	Parallel Slave Port Address input
		0	O	DIG	Parallel Master Port Address output
	SDI1	1	I	ST	SPI data input (MSSP1 module).
	SDA1	1	I	I^2C/ SMBus	I^2C data input (MSSP1 module).
		0	O	I^2C	I^2C™/SMBus.
	RP8	1	I	ST	Remappable Peripheral Pin 8 input.
		0	O	DIG	Remappable Peripheral Pin 8 output.
RB6/KBI2/ PGC/RP9	RB6	0	O	DIG	LATB<6> data output.
		1	I	TTL	PORTB<6> data input; weak pull-up when $\overline{\text{RBPU}}$ bit is cleared.
	KBI2	1	I	TTL	Interrupt-on-change pin.
	PGC	x	I	ST	Serial execution (ICSP™) clock input for ICSP and ICD operation.(2)
	RP9	1	I	ST	Remappable Peripheral Pin 9 input.
		0	O	DIG	Remappable Peripheral Pin 9 output.

Legend: DIG = Digital level output; TTL = TTL input buffer; ST = Schmitt Trigger input buffer; ANA = Analog level input/output; x = Don't care (TRIS bit does not affect port direction or is overridden for this option)

Note 1: Pins are configured as analog inputs by default on POR. Using these pins for digital inputs requires setting the appropriate bits in the ANCONx register first.

2: All other pin functions are disabled when ICSP™ or MPLAB® ICD are enabled.

3: This functionality is only available on 44-pin devices.

TABLE 10-5: PORTB I/O SUMMARY (CONTINUED)

Pin	Function	TRIS Setting	I/O	I/O Type	Description
RB7/KBI3/ PGD/RP10	RB7	0	O	DIG	LATB<7> data output.
		1	I	TTL	PORTB<7> data input; weak pull-up when $\overline{\text{RBPU}}$ bit is cleared.
	KBI3	1	I	TTL	Interrupt-on-change pin.
	PGD	x	O	DIG	Serial execution data output for ICSP and ICD operation.(2)
		x	I	ST	Serial execution data input for ICSP and ICD operation.(2)
	RP10	1	I	ST	Remappable Peripheral Pin 10 input.
		0	O	ST	Remappable Peripheral Pin 10 output.

Legend: DIG = Digital level output; TTL = TTL input buffer; ST = Schmitt Trigger input buffer; ANA = Analog level input/output; x = Don't care (TRIS bit does not affect port direction or is overridden for this option)

Note 1: Pins are configured as analog inputs by default on POR. Using these pins for digital inputs requires setting the appropriate bits in the ANCONx register first.

2: All other pin functions are disabled when ICSP™ or MPLAB® ICD are enabled.

3: This functionality is only available on 44-pin devices.

TABLE 10-6: SUMMARY OF REGISTERS ASSOCIATED WITH PORTB

Name	Bit 7	Bit 6	Bit 5	Bit 4	Bit 3	Bit 2	Bit 1	Bit 0	Reset Values on Page
PORTB	RB7	RB6	RB5	RB4	RB3	RB2	RB1	RB0	92
LATB	LATB7	LATB6	LATB5	LATB4	LATB3	LATB2	LATB1	LATB0	92
TRISB	TRISB7	TRISB6	TRISB5	TRISB4	TRISB3	TRISB2	TRISB1	TRISB0	92
INTCON	GIE/GIEH	PEIE/GIEL	TMR0IE	INT0IE	RBIE	TMR0IF	INT0IF	RBIF	89
INTCON2	$\overline{\text{RBPU}}$	INTEDG0	INTEDG1	INTEDG2	INTEDG3	TMR0IP	INT3IP	RBIP	89
INTCON3	INT2IP	INT1IP	INT3IE	INT2IE	INT1IE	INT3IF	INT2IF	INT1IF	89
ADCON0	PCFG7	PCFG6	PCFG5	PCFG4	PCFG3	PCFG2	PCFG1	PCFG0	90

Legend: — = unimplemented, read as '0'. Shaded cells are not used by PORTB.

© 2011 Microchip Technology Inc.

10.4 PORTC, TRISC and LATC Registers

PORTC is an 8-bit wide, bidirectional port. The corresponding Data Direction register is TRISC. Setting a TRISC bit (= 1) will make the corresponding PORTC pin an input (i.e., put the corresponding output driver in a High-Impedance mode). Clearing a TRISC bit (= 0) will make the corresponding PORTC pin an output (i.e., put the contents of the output latch on the selected pin).

The Data Latch register (LATC) is also memory mapped. Read-modify-write operations on the LATC register read and write the latched output value for PORTC.

PORTC is multiplexed with several peripheral functions (see Table 10-7). The pins have Schmitt Trigger input buffers.

When enabling peripheral functions, care should be taken in defining TRIS bits for each PORTC pin. Some peripherals override the TRIS bit to make a pin an output, while other peripherals override the TRIS bit to make a pin an input. The user should refer to the corresponding peripheral section for additional information.

Pins, RC4 and RC5, are multiplexed with the USB module. Depending on the configuration of the module, they can serve as the differential data lines for the on-chip USB transceiver, or the data inputs from an external USB transceiver. When used as general purpose inputs, both RC4 and RC5 input buffers depend on the level of the voltage applied to the V_{USB} pin, instead of V_{DD}, like all other general purpose I/O pins. Therefore, if the RC4 or RC5 general purpose input capability will be used, the V_{USB} pin should not be left floating.

Unlike other PORTC pins, RC4 and RC5 do not have TRISC bits associated with them. As digital ports, they can only function as digital inputs. When configured for USB operation, the data direction is determined by the configuration and status of the USB module at a given time. If an external transceiver is used, RC4 and RC5 always function as inputs from the transceiver. If the on-chip transceiver is used, the data direction is determined by the operation being performed by the module at that time.

Note:	On a Power-on Reset, PORTC pins (except RC2, RC4 and RC5) are configured as digital inputs. RC2 will default as an analog input (controlled by the ANCON1 register). To use pins, RC4 and RC5, as digital inputs, the USB module must be disabled (UCON<3> = 0) and the on-chip USB transceiver must be disabled (UCFG<3> = 1). The internal USB transceiver has a POR value of enabled.

The contents of the TRISC register are affected by peripheral overrides. Reading TRISC always returns the current contents, even though a peripheral device may be overriding one or more of the pins.

EXAMPLE 10-4: INITIALIZING PORTC

```
CLRF       LATC                 ; Initialize output data
                                ; latch values for logic
                                ; output low value.
MOVLB      0x0F                 ; ANCONx registers are
                                ; not in access bank
                                ;Configure RC2/AN11 for digital input mode
BSF        ANCON1, PCFG11, BANKED
                                ;Disable USB transceiver to use RC4/RC5 as
                                ;general purpose inputs
BCF        UCON, USBEN          ;Disable USB module
BSF        UCFG, UTRDIS         ;Disable USB transceiver

MOVLW      0x3F                 ; RC0 configured as digital input
MOVWF      TRISC                ; RC1 configured as digital input
                                ; RC2 configured as digital input
                                ; RC4 configured as digital input
                                ; RC5 configured as digital input
                                ; RC6 configured as digital output
                                ; RC7 configured as digital output
```

TABLE 10-7: PORTC I/O SUMMARY

Pin	Function	TRIS Setting	I/O	I/O Type	Description
RC0/T1OSO/ T1CKI/RP11	RC0	1	I	ST	PORTC<0> data input.
		0	O	DIG	LATC<0> data output.
	T1OSO	x	O	ANA	Timer1 oscillator output; enabled when Timer1 oscillator is enabled. Disables digital I/O.
	T1CKI	1	I	ST	Timer1 digital clock input.
	RP11	1	I	ST	Remappable Peripheral Pin 11 input.
		0	O	DIG	Remappable Peripheral Pin 11 output.
RC1/T1OSI/ $\overline{UOE}$/RP12	RC1	1	I	ST	PORTC<1> data input.
		0	O	DIG	LATC<1> data output.
	T1OSI	x	I	ANA	Timer1 oscillator input; enabled when Timer1 oscillator is enabled. Disables digital I/O.
	$\overline{UOE}$	0	O	DIG	External USB transceiver NOE output.
	RP12	1	I	ST	Remappable Peripheral Pin 12 input.
		0	O	DIG	Remappable Peripheral Pin 12 output.
RC2/AN11/ CTPLS/RP13	RC2	1	I	ST	PORTC<2> data input.
		0	O	DIG	PORTC<2> data output.
	AN11	1	I	ANA	A/D Input Channel 11.
	CTPLS	0	O	DIG	CTMU pulse generator output.
	RP13	1	I	ST	Remappable Peripheral Pin 13 input.
		0	O	DIG	Remappable Peripheral Pin 13 output.
RC4/D-/VM	RC4	x	I	TTL	PORTC<4> data input.
	D-	x	I	XCVR	USB bus minus line output.
		x	O	XCVR	USB bus minus line input.
	VM	1	I	TTL	External USB transceiver VP input.
RC5/D+/VP	RC5	x	I	TTL	PORTC<5> data input.
	D+	x	I	XCVR	USB bus plus line input.
		x	O	XCVR	USB bus plus line output.
	VP	1	I	TTL	External USB transceiver VP input.

Legend: DIG = Digital level output; TTL = TTL input buffer; ST = Schmitt Trigger input buffer; ANA = Analog level input/output; I^2C/SMB = I^2C/SMBus input buffer; x = Don't care (TRIS bit does not affect port direction or is overridden for this option)

Note 1: This functionality is only available on 44-pin devices.

© 2011 Microchip Technology Inc.

TABLE 10-7: PORTC I/O SUMMARY (CONTINUED)

Pin	Function	TRIS Setting	I/O	I/O Type	Description
RC6/PMA5/ TX1/CK1/RP17	RC6	1	I	ST	PORTC<6> data input.
		0	O	DIG	LATC<6> data output.
	PMA5(1)	0	O	DIG	Parallel Master Port address.
	TX1	0	O	DIG	Asynchronous serial transmit data output (EUSART module); takes priority over port data. User must configure as an output.
	CK1	1	I	ST	Synchronous serial clock input (EUSART module).
		0	O	DIG	Synchronous serial clock output (EUSART module); takes priority over port data.
	RP17	1	I	ST	Remappable Peripheral Pin 17 input.
		0	O	DIG	Remappable Peripheral Pin 17 output.
RC7/PMA4/ RX1/DT1/ SDO1/RP18	RC7	1	I	ST	PORTC<7> data input.
		0	O	DIG	LATC<7> data output.
	PMA4(1)	0	O	DIG	Parallel Master Port address.
	RX1	1	I	ST	Asynchronous serial receive data input (EUSART module).
	DT1	1	1	ST	Synchronous serial data input (EUSART module). User must configure as an input.
		0	O	DIG	Synchronous serial data output (EUSART module); takes priority over port data.
	SDO1	0	O	DIG	SPI data output (MSSP1 module).
	RP18	1	I	ST	Remappable Peripheral Pin 18 input.
		0	O	DIG	Remappable Peripheral Pin 18 output.

Legend: DIG = Digital level output; TTL = TTL input buffer; ST = Schmitt Trigger input buffer; ANA = Analog level input/output; I^2C/SMB = I^2C/SMBus input buffer; x = Don't care (TRIS bit does not affect port direction or is overridden for this option)

Note 1: This functionality is only available on 44-pin devices.

TABLE 10-8: SUMMARY OF REGISTERS ASSOCIATED WITH PORTC

Name	Bit 7	Bit 6	Bit 5	Bit 4	Bit 3	Bit 2	Bit 1	Bit 0	Reset Values on Page:
PORTC	RC7	RC6	RC5	RC4	—	RC2	RC1	RC0	92
LATC	LATC7	LATC6	—	—	—	LATC2	LATC1	LATC0	92
TRISC	TRISC7	TRISC6	—	—	—	TRISC2	TRISC1	TRISC0	92

10.5 PORTD, TRISD and LATD Registers

Note: PORTD is available only on 44-pin devices.

PORTD is an 8-bit wide, bidirectional port. The corresponding Data Direction register is TRISD. Setting a TRISD bit (= 1) will make the corresponding PORTD pin an input (i.e., put the corresponding output driver in a High-Impedance mode). Clearing a TRISD bit (= 0) will make the corresponding PORTD pin an output (i.e., put the contents of the output latch on the selected pin).

The Data Latch register (LATD) is also memory mapped. Read-modify-write operations on the LATD register read and write the latched output value for PORTD.

All pins on PORTD are implemented with Schmitt Trigger input buffers. Each pin is individually configurable as an input or an output.

Note: On a POR, these pins are configured as digital inputs.

EXAMPLE 10-5: INITIALIZING PORTD

```
CLRF    LATD        ;Initialize output data
                    ;levels for output pins
MOVLW   0x7F        ;Example value used to
                    ;initialize data direction
MOVWF   TRISD       ;RD0-RD6 as inputs
                    ;RD7 as output
```

Each of the PORTD pins has a weak internal pull-up. A single control bit can turn on all the pull-ups. This is performed by setting bit, RDPU (PORTE<7>). The weak pull-up is automatically turned off when the port pin is configured as an output. The pull-ups are disabled on a POR. The integrated weak pull-ups consist of a semiconductor structure similar to, but somewhat different, from a discrete resistor. On an unloaded I/O pin, the weak pull-ups are intended to provide logic high indication, but will not necessarily pull the pin all the way to V_{DD} levels.

Note that the pull-ups can be used for any set of features, similar to the pull-ups found on PORTB.

TABLE 10-9: PORTD I/O SUMMARY

Pin	Function	TRIS Setting	I/O	I/O Type	Description
RD0/PMD0/ SCL2	RD0	1	I	ST	PORTD<0> data input.
		0	O	DIG	LATD<0> data output.
	PMD0	1	I	ST/TTL	Parallel Master Port data in.
		0	O	DIG	Parallel Master Port data out.
	SCL2	1	I	I^2C/ SMB	I^2C™ clock input (MSSP2 module); input type depends on module setting.
		0	O	I^2C	I^2C clock output (MSSP2 module); takes priority over port data.
RD1/PMD1/ SDA2	RD1	1	I	ST	PORTD<1> data input.
		0	O	DIG	LATD<1> data output.
	PMD1	1	I	ST/TTL	Parallel Master Port data in.
		0	O	DIG	Parallel Master Port data out.
	SDA2	1	I	I^2C/ SMB	I^2C data input (MSSP2 module); input type depends on module setting.
		0	O	I^2C	I^2C data output (MSSP2 module); takes priority over port data.
RD2/PMD2/ RP19	RD2	1	I	ST	PORTD<2> data input.
		0	O	DIG	LATD<2> data output.
	PMD2	1	I	ST/TTL	Parallel Master Port data in.
		0	O	DIG	Parallel Master Port data out.
	RP19	1	I	ST	Remappable Peripheral Pin 19 input.
		0	O	DIG	Remappable Peripheral Pin 19 output.

Legend: DIG = Digital level output; TTL = TTL input buffer; ST = Schmitt Trigger input buffer; I^2C/SMB = I^2C/SMBus input buffer; x = Don't care (TRIS bit does not affect port direction or is overridden for this option).

© 2011 Microchip Technology Inc.

TABLE 10-9: PORTD I/O SUMMARY (CONTINUED)

Pin	Function	TRIS Setting	I/O	I/O Type	Description
RD3/PMD3/ RP20	RD3	1	I	DIG	PORTD<3> data input.
		0	O	DIG	LATD<3> data output.
	PMD3	1	I	ST/TTL	Parallel Master Port data in.
		0	O	DIG	Parallel Master Port data out.
	RP20	1	I	ST	Remappable Peripheral Pin 20 input.
		0	O	DIG	Remappable Peripheral Pin 20 output.
RD4/PMD4/ RP21	RD4	1	I	ST	PORTD<4> data input.
		0	O	DIG	LATD<4> data output.
	PMD4	1	I	ST/TTL	Parallel Master Port data in.
		0	O	DIG	Parallel Master Port data out.
	RP21	1	I	ST	Remappable Peripheral Pin 21 input.
		0	O	DIG	Remappable Peripheral Pin 21 output.
RD5/PMD5/ RP22	RD5	1	I	ST	PORTD<5> data input.
		0	O	DIG	LATD<5> data output.
	PMD5	1	I	ST/TTL	Parallel Master Port data in.
		0	O	DIG	Parallel Master Port data out.
	RP22	1	I	ST	Remappable Peripheral Pin 22 input.
		0	O	DIG	Remappable Peripheral Pin 22 output.
RD6/PMD6/ RP23	RD6	1	I	ST	PORTD<6> data input.
		0	O	DIG	LATD<6> data output.
	PMD6	1	I	ST/TTL	Parallel Master Port data in.
		0	O	DIG	Parallel Master Port data out.
	RP23	1	I	ST	Remappable Peripheral Pin 23 input.
		0	O	DIG	Remappable Peripheral Pin 23 output.
RD7/PMD7/ RP24	RD7	1	I	ST	PORTD<7> data input.
		0	O	DIG	LATD<7> data output.
	PMD7	1	I	ST/TTL	Parallel Master Port data in.
		0	O	DIG	Parallel Master Port data out.
	RP24	1	I	ST	Remappable Peripheral Pin 24 input.
		0	O	DIG	Remappable Peripheral Pin 24 output.

Legend: DIG = Digital level output; TTL = TTL input buffer; ST = Schmitt Trigger input buffer; I^2C/SMB = I^2C/SMBus input buffer; x = Don't care (TRIS bit does not affect port direction or is overridden for this option).

TABLE 10-10: SUMMARY OF REGISTERS ASSOCIATED WITH PORTD

Name	Bit 7	Bit 6	Bit 5	Bit 4	Bit 3	Bit 2	Bit 1	Bit 0	Reset Values on Page
PORTD(1)	RD7	RD6	RD5	RD4	RD3	RD2	RD1	RD0	92
LATD(1)	LATD7	LATD6	LATD5	LATD4	LATD3	LATD2	LATD1	LATD0	92
TRISD(1)	TRISD7	TRISD6	TRISD5	TRISD4	TRISD3	TRISD2	TRISD1	TRISD0	92

Legend: — = unimplemented, read as '0'. Shaded cells are not used by PORTD.

Note 1: These registers are not available on 28-pin devices.

10.6 PORTE, TRISE and LATE Registers

Note: PORTE is available only on 44-pin devices.

Depending on the particular PIC18F46J50 family device selected, PORTE is implemented in two different ways.

For 44-pin devices, PORTE is a 3-bit wide port. Three pins (RE0/AN5/PMRD, RE1/AN6/PMWR and RE2/AN7/PMCS) are individually configurable as inputs or outputs. These pins have Schmitt Trigger input buffers. When selected as analog inputs, these pins will read as '0's.

The corresponding Data Direction register is TRISE. Setting a TRISE bit (= 1) will make the corresponding PORTE pin an input (i.e., put the corresponding output driver in a High-Impedance mode). Clearing a TRISE bit (= 0) will make the corresponding PORTE pin an output (i.e., put the contents of the output latch on the selected pin).

TRISE controls the direction of the RE pins, even when they are being used as analog inputs. The user must make sure to keep the pins configured as inputs when using them as analog inputs.

Note: On a POR, RE<2:0> are configured as analog inputs.

The Data Latch register (LATE) is also memory mapped. Read-modify-write operations on the LATE register read and write the latched output value for PORTE.

EXAMPLE 10-6: INITIALIZING PORTE

```
CLRF   LATE          ;Initialize LATE output
                     ;latch values
MOVLB  0x0F          ;ANCON registers not
                     ;in access bank
BSF    ANCON0,PCFG5  ;RE0/AN5 as digital
BSF    ANCON0,PCFG6  ;RE1/AN6 as digital
MOVLW  0x03          ;Example value used to
                     ;initialize data direction
MOVWF  TRISE         ;RE0, RE1 as inputs
                     ;RE2 as output
```

Each of the PORTE pins has a weak internal pull-up. A single control bit can turn on all the pull-ups. This is performed by setting bit, REPU (PORTE<6>). The weak pull-up is automatically turned off when the port pin is configured as an output. The pull-ups are disabled on a POR. The integrated weak pull-ups consist of a semiconductor structure similar to, but somewhat different, from a discrete resistor. On an unloaded I/O pin, the weak pull-ups are intended to provide logic high indication, but will not necessarily pull the pin all the way to V_{DD} levels.

Note that the pull-ups can be used for any set of features, similar to the pull-ups found on PORTB

REGISTER 10-5: PORTE REGISTER

R/W-0	R/W-0	U-0	U-0	U-0	R/W-0	R/W-0	R/W-0
RDPU	REPU	—	—	—	RE2	RE1	RE0
bit 7							bit 0

Legend:			
R = Readable bit	W = Writable bit	U = Unimplemented bit, read as '0'	
-n = Value at POR	'1' = Bit is set	'0' = Bit is cleared	x = Bit is unknown

bit 7 **RDPU:** PORTD Pull-up Enable bit
1 = PORTD pull-ups are enabled by individual TRIS values
0 = All PORTD pull-ups are disabled

bit 6 **REPU:** PORTE Pull-up Enable bit
1 = PORTE pull-ups are enabled by individual TRIS values
0 = All PORTE pull-ups are disabled

bit 5-3 **Unimplemented:** Read as '0'

bit 2-0 **RE<2:0>:** PORTE Data Input bits

© 2011 Microchip Technology Inc.

TABLE 10-11: PORTE I/O SUMMARY

Pin	Function	TRIS Setting	I/O	I/O Type	Description
RE0/AN5/ PMRD	RE0	1	I	ST	PORTE<0> data input; disabled when analog input is enabled.
		0	O	DIG	LATE<0> data output; not affected by analog input.
	AN5	1	I	ANA	A/D Input Channel 5; default input configuration on POR.
	PMRD	1	I	ST/TTL	Parallel Master Port io_rd_in.
		0	O	DIG	Parallel Master Port read strobe.
RE1/AN6/ PMWR	RE1	1	I	ST	PORTE<1> data input; disabled when analog input is enabled.
		0	O	DIG	LATE<1> data output; not affected by analog input.
	AN6	1	I	ANA	A/D Input Channel 6; default input configuration on POR.
	PMWR	1	I	ST/TTL	Parallel Master Port io_wr_in.
		0	O	DIG	Parallel Master Port write strobe.
RE2/AN7/ PMCS	RE2	1	I	ST	PORTE<2> data input; disabled when analog input is enabled.
		0	O	DIG	LATE<2> data output; not affected by analog input.
	AN7	1	I	ANA	A/D Input Channel 7; default input configuration on POR.
	PMCS	0	O	DIG	Parallel Master Port byte enable.

Legend: DIG = Digital level output; TTL = TTL input buffer; ST = Schmitt Trigger input buffer; ANA = Analog level; I = Input; O = Output; P = Power

TABLE 10-12: SUMMARY OF REGISTERS ASSOCIATED WITH PORTE

Name	Bit 7	Bit 6	Bit 5	Bit 4	Bit 3	Bit 2	Bit 1	Bit 0	Reset Values on Page
PORTE(1)	RDPU	REPU	—	—	—	RE2	RE1	RE0	92
LATE(1)	—	—	—	—	—	LATE2	LATE1	LATE0	92
TRISE(1)	—	—	—	—	—	TRISE2	TRISE1	TRISE0	92
ANCON0	PCFG7(2)	PCFG6(2)	PCFG5(2)	PCFG4	PCFG3	PCFG2	PCFG1	PCFG0	94

Legend: — = unimplemented, read as '0'. Shaded cells are not used by PORTE.

Note 1: These registers are not available on 28-pin devices.

2: These bits are only available on 44-pin devices.

10.7 Peripheral Pin Select (PPS)

A major challenge in general purpose devices is providing the largest possible set of peripheral features while minimizing the conflict of features on I/O pins. The challenge is even greater on low pin count devices similar to the PIC18F46J50 family. In an application that needs to use more than one peripheral multiplexed on a single pin, inconvenient work arounds in application code, or a complete redesign, may be the only option.

The Peripheral Pin Select (PPS) feature provides an alternative to these choices by enabling the user's peripheral set selections and their placement on a wide range of I/O pins. By increasing the pinout options available on a particular device, users can better tailor the microcontroller to their entire application, rather than trimming the application to fit the device.

The PPS feature operates over a fixed subset of digital I/O pins. Users may independently map the input and/or output of any one of the many digital peripherals to any one of these I/O pins. PPS is performed in software and generally does not require the device to be reprogrammed. Hardware safeguards are included that prevent accidental or spurious changes to the peripheral mapping once it has been established.

10.7.1 AVAILABLE PINS

The PPS feature is used with a range of up to 22 pins. The number of available pins is dependent on the particular device and its pin count. Pins that support the PPS feature include the designation "RPn" in their full pin designation, where "RP" designates a remappable peripheral and "n" is the remappable pin number. See Table 1-2 for pinout options in each package offering.

10.7.2 AVAILABLE PERIPHERALS

The peripherals managed by the PPS are all digital only peripherals. These include general serial communications (UART and SPI), general purpose timer clock inputs, timer-related peripherals (input capture and output compare) and external interrupt inputs. Also included are the outputs of the comparator module, since these are discrete digital signals.

The PPS module is not applied to I^2C, change notification inputs, RTCC alarm outputs or peripherals with analog inputs. Additionally, the MSSP1 and EUSART1 modules are not routed through the PPS module.

A key difference between pin select and non-pin select peripherals is that pin select peripherals are not associated with a default I/O pin. The peripheral must always be assigned to a specific I/O pin before it can be used. In contrast, non-pin select peripherals are always available on a default pin, assuming that the peripheral is active and not conflicting with another peripheral.

10.7.2.1 Peripheral Pin Select Function Priority

When a pin-selectable peripheral is active on a given I/O pin, it takes priority over all other digital I/O and digital communication peripherals associated with the pin. Priority is given, regardless of the type of peripheral that is mapped. Pin select peripherals never take priority over any analog functions associated with the pin.

10.7.3 CONTROLLING PERIPHERAL PIN SELECT

PPS features are controlled through two sets of Special Function Registers (SFRs): one to map peripheral inputs and the other to map outputs. Because they are separately controlled, a particular peripheral's input and output (if the peripheral has both) can be placed on any selectable function pin without constraint.

The association of a peripheral to a peripheral-selectable pin is handled in two different ways, depending on whether an input or an output is being mapped.

© 2011 Microchip Technology Inc.

10.7.3.1 Input Mapping

The inputs of the PPS options are mapped on the basis of the peripheral; that is, a control register associated with a peripheral dictates the pin it will be mapped to. The RPINRx registers are used to configure peripheral input mapping (see Register 10-7 through Register 10-21). Each register contains a 5-bit field which is associated with one of the pin-selectable peripherals. Programming a given peripheral's bit field with an appropriate 5-bit value maps the RPn pin with that value to that peripheral. For any given device, the valid range of values for any of the bit fields corresponds to the maximum number of peripheral pin selections supported by the device.

TABLE 10-13: SELECTABLE INPUT SOURCES (MAPS INPUT TO FUNCTION)(1)

Input Name	Function Name	Register	Configuration Bits
External Interrupt 1	INT1	RPINR1	INTR1R<4:0>
External Interrupt 2	INT2	RPINR2	INTR2R<4:0>
External Interrupt 3	INT3	RPINR3	INTR3R<4:0>
Timer0 External Clock Input	T0CKI	RPINR4	T0CKR<4:0>
Timer3 External Clock Input	T3CKI	RPINR6	T3CKR<4:0>
Input Capture 1	CCP1	RPINR7	IC1R<4:0>
Input Capture 2	CCP2	RPINR8	IC2R<4:0>
Timer1 Gate Input	T1G	RPINR12	T1GR<4:0>
Timer3 Gate Input	T3G	RPINR13	T3GR<4:0>
EUSART2 Asynchronous Receive/Synchronous Receive	RX2/DT2	RPINR16	RX2DT2R<4:0>
EUSART2 Asynchronous Clock Input	CK2	RPINR17	CK2R<4:0>
SPI2 Data Input	SDI2	RPINR21	SDI2R<4:0>
SPI2 Clock Input	SCK2IN	RPINR22	SCK2R<4:0>
SPI2 Slave Select Input	SS2IN	RPINR23	SS2R<4:0>
PWM Fault Input	FLT0	RPINR24	OCFAR<4:0>

Note 1: Unless otherwise noted, all inputs use the Schmitt Trigger input buffers.

10.7.3.2 Output Mapping

In contrast to inputs, the outputs of the PPS options are mapped on the basis of the pin. In this case, a control register associated with a particular pin dictates the peripheral output to be mapped. The RPORx registers are used to control output mapping. The value of the bit field corresponds to one of the peripherals and that peripheral's output is mapped to the pin (see Table 10-14).

Because of the mapping technique, the list of peripherals for output mapping also includes a null value of '00000'. This permits any given pin to remain disconnected from the output of any of the pin-selectable peripherals.

TABLE 10-14: SELECTABLE OUTPUT SOURCES (MAPS FUNCTION TO OUTPUT)

Function	Output Function Number(1)	Output Name
NULL	0	NULL(2)
C1OUT	1	Comparator 1 Output
C2OUT	2	Comparator 2 Output
TX2/CK2	5	EUSART2 Asynchronous Transmit/Asynchronous Clock Output
DT2	6	EUSART2 Synchronous Transmit
SDO2	9	SPI2 Data Output
SCK2	10	SPI2 Clock Output
SSDMA	12	SPI DMA Slave Select
ULPOUT	13	Ultra Low-Power Wake-up Event
CCP1/P1A	14	ECCP1 Compare or PWM Output Channel A
P1B	15	ECCP1 Enhanced PWM Output, Channel B
P1C	16	ECCP1 Enhanced PWM Output, Channel C
P1D	17	ECCP1 Enhanced PWM Output, Channel D
CCP2/P2A	18	ECCP2 Compare or PWM Output
P2B	19	ECCP2 Enhanced PWM Output, Channel B
P2C	20	ECCP2 Enhanced PWM Output, Channel C
P2D	21	ECCP2 Enhanced PWM Output, Channel D

Note 1: Value assigned to the RP<4:0> pins corresponds to the peripheral output function number.

2: The NULL function is assigned to all RPn outputs at device Reset and disables the RPn output function.

© 2011 Microchip Technology Inc.

10.7.3.3 Mapping Limitations

The control schema of the PPS is extremely flexible. Other than systematic blocks that prevent signal contention caused by two physical pins being configured as the same functional input, or two functional outputs configured as the same pin, there are no hardware enforced lock outs. The flexibility extends to the point of allowing a single input to drive multiple peripherals or a single functional output to drive multiple output pins.

10.7.4 CONTROLLING CONFIGURATION CHANGES

Because peripheral remapping can be changed during run time, some restrictions on peripheral remapping are needed to prevent accidental configuration changes. PIC18F devices include three features to prevent alterations to the peripheral map:

- Control register lock sequence
- Continuous state monitoring
- Configuration bit remapping lock

10.7.4.1 Control Register Lock

Under normal operation, writes to the RPINRx and RPORx registers are not allowed. Attempted writes will appear to execute normally, but the contents of the registers will remain unchanged. To change these registers, they must be unlocked in hardware. The register lock is controlled by the IOLOCK bit (PPSCON<0>). Setting IOLOCK prevents writes to the control registers; clearing IOLOCK allows writes.

To set or clear IOLOCK, a specific command sequence must be executed:

1. Write 55h to EECON2<7:0>.
2. Write AAh to EECON2<7:0>.
3. Clear (or set) IOLOCK as a single operation.

IOLOCK remains in one state until changed. This allows all of the PPS registers to be configured with a single unlock sequence, followed by an update to all control registers, then locked with a second lock sequence.

10.7.4.2 Continuous State Monitoring

In addition to being protected from direct writes, the contents of the RPINRx and RPORx registers are constantly monitored in hardware by shadow registers. If an unexpected change in any of the registers occurs (such as cell disturbances caused by ESD or other external events), a Configuration Mismatch Reset will be triggered.

10.7.4.3 Configuration Bit Pin Select Lock

As an additional level of safety, the device can be configured to prevent more than one write session to the RPINRx and RPORx registers. The IOL1WAY (CONFIG3H<0>) Configuration bit blocks the IOLOCK bit from being cleared after it has been set once. If IOLOCK remains set, the register unlock procedure will not execute and the PPS Control registers cannot be written to. The only way to clear the bit and re-enable peripheral remapping is to perform a device Reset.

In the default (unprogrammed) state, IOL1WAY is set, restricting users to one write session. Programming IOL1WAY allows users unlimited access (with the proper use of the unlock sequence) to the PPS registers.

10.7.5 CONSIDERATIONS FOR PERIPHERAL PIN SELECTION

The ability to control Peripheral Pin Selection introduces several considerations into application design that could be overlooked. This is particularly true for several common peripherals that are available only as remappable peripherals.

The main consideration is that the PPS is not available on default pins in the device's default (Reset) state. Since all RPINRx registers reset to '11111' and all RPORx registers reset to '00000', all PPS inputs are tied to RP31 and all PPS outputs are disconnected.

Note:	In tying PPS inputs to RP31, RP31 does not have to exist on a device for the registers to be reset to it.

This situation requires the user to initialize the device with the proper peripheral configuration before any other application code is executed. Since the IOLOCK bit resets in the unlocked state, it is not necessary to execute the unlock sequence after the device has come out of Reset.

For application safety, however, it is best to set IOLOCK and lock the configuration after writing to the control registers.

The unlock sequence is timing-critical. Therefore, it is recommended that the unlock sequence be executed as an assembly language routine with interrupts temporarily disabled. If the bulk of the application is written in 'C' or another high-level language, the unlock sequence should be performed by writing in-line assembly.

Choosing the configuration requires the review of all PPSs and their pin assignments, especially those that will not be used in the application. In all cases, unused pin-selectable peripherals should be disabled completely. Unused peripherals should have their inputs assigned to an unused RPn pin function. I/O pins with unused RPn functions should be configured with the NULL peripheral output.

The assignment of a peripheral to a particular pin does not automatically perform any other configuration of the pin's I/O circuitry. In theory, this means adding a pin-selectable output to a pin may mean inadvertently driving an existing peripheral input when the output is driven. Users must be familiar with the behavior of other fixed peripherals that share a remappable pin and know when to enable or disable them. To be safe, fixed digital peripherals that share the same pin should be disabled when not in use.

Along these lines, configuring a remappable pin for a specific peripheral does not automatically turn that feature on. The peripheral must be specifically configured for operation and enabled, as if it were tied to a fixed pin. Where this happens in the application code (immediately following device Reset and peripheral configuration or inside the main application routine) depends on the peripheral and its use in the application.

A final consideration is that the PPS functions neither override analog inputs nor reconfigure pins with analog functions for digital I/O. If a pin is configured as an analog input on a device Reset, it must be explicitly reconfigured as a digital I/O when used with a PPS.

Example 10-7 provides a configuration for bidirectional communication with flow control using EUSART2. The following input and output functions are used:

- Input Function RX2
- Output Function TX2

EXAMPLE 10-7: CONFIGURING EUSART2 INPUT AND OUTPUT FUNCTIONS

```
;***********************************
; Unlock Registers
;***********************************
                      ; PPS registers are in
                      BANK 14
MOVLB  0x0E
BCF    INTCON, GIE    ; Disable interrupts
                      ; for unlock sequence
MOVLW  0x55
MOVWF  EECON2, 0
MOVLW  0xAA
MOVWF  EECON2, 0
                      ; Turn off PPS Write Protect
BCF    PPSCON, IOLOCK, BANKED

;**************************
; Configure Input Functions
; (See Table 9-13)
;**************************
    ;**************************
    ; Assign RX2 To Pin RP0
    ;**************************
MOVLW  0x00
MOVWF  RPINR16, BANKED

;**************************
; Configure Output Functions
; (See Table 9-14)
;**************************
    ;**************************
    ; Assign TX2 To Pin RP1
    ;**************************
MOVLW  0x05
MOVWF  RPOR1, BANKED

;***********************************
; Lock Registers
;***********************************
MOVLW  0x55
MOVWF  EECON2, 0
MOVLW  0xAA
MOVWF  EECON2, 0

; Write Protect PPS (if desired)
BSF    PPSCON, IOLOCK, BANKED
```

Note: If the Configuration bit, IOL1WAY = 1, once the IOLOCK bit is set, it cannot be cleared, preventing any future RP register changes. The IOLOCK bit is cleared back to '0' on any device Reset.

© 2011 Microchip Technology Inc.

10.7.6 PERIPHERAL PIN SELECT REGISTERS

The PIC18F46J50 family of devices implements a total of 37 registers for remappable peripheral configuration of 44-pin devices. The 28-pin devices have 31 registers for remappable peripheral configuration.

Note: Input and output register values can only be changed if IOLOCK (PPSCON<0>) = 0. See Example 10-7 for a specific command sequence.

REGISTER 10-6: PPSCON: PERIPHERAL PIN SELECT INPUT REGISTER 0 (BANKED EFFh)(1)

U-0	U-0	U-0	U-0	U-0	U-0	U-0	R/W-0
—	—	—	—	—	—	—	IOLOCK
bit 7							bit 0

Legend:			
R = Readable bit	W = Writable bit	U = Unimplemented bit, read as '0'	
-n = Value at POR	'1' = Bit is set	'0' = Bit is cleared	x = Bit is unknown

bit 7-1 **Unimplemented:** Read as '0'

bit 0 **IOLOCK:** I/O Lock Enable bit

1 = I/O lock is active, RPORx and RPINRx registers are write-protected
0 = I/O lock is not active, pin configurations can be changed

Note 1: Register values can only be changed if IOLOCK (PPSCON<0>) = 0.

REGISTER 10-7: RPINR1: PERIPHERAL PIN SELECT INPUT REGISTER 1 (BANKED EE7h)

U-0	U-0	U-0	R/$\overline{W}$-1	R/$\overline{W}$-1	R/$\overline{W}$-1	R/$\overline{W}$-1	R/$\overline{W}$-1
—	—	—	INTR1R4	INTR1R3	INTR1R2	INTR1R1	INTR1R0
bit 7							bit 0

Legend:	R/$\overline{W}$ = Readable, Writable bit if IOLOCK = 0		
R = Readable bit	W = Writable bit	U = Unimplemented bit, read as '0'	
-n = Value at POR	'1' = Bit is set	'0' = Bit is cleared	x = Bit is unknown

bit 7-5 **Unimplemented:** Read as '0'

bit 4-0 **INTR1R<4:0>:** Assign External Interrupt 1 (INT1) to the Corresponding RPn Pin bits

REGISTER 10-8: RPINR2: PERIPHERAL PIN SELECT INPUT REGISTER 2 (BANKED EE8h)

U-0	U-0	U-0	R/$\overline{W}$-1	R/$\overline{W}$-1	R/$\overline{W}$-1	R/$\overline{W}$-1	R/$\overline{W}$-1
—	—	—	INTR2R4	INTR2R3	INTR2R2	INTR2R1	INTR2R0
bit 7							bit 0

Legend:	R/$\overline{W}$ = Readable, Writable bit if IOLOCK = 0		
R = Readable bit	W = Writable bit	U = Unimplemented bit, read as '0'	
-n = Value at POR	'1' = Bit is set	'0' = Bit is cleared	x = Bit is unknown

bit 7-5 **Unimplemented:** Read as '0'

bit 4-0 **INTR2R<4:0>:** Assign External Interrupt 2 (INT2) to the Corresponding RPn Pin bits

REGISTER 10-9: RPINR3: PERIPHERAL PIN SELECT INPUT REGISTER 3 (BANKED EE9h)

U-0	U-0	U-0	R/$\overline{W}$-1	R/$\overline{W}$-1	R/$\overline{W}$-1	R/$\overline{W}$-1	R/$\overline{W}$-1
—	—	—	INTR3R4	INTR3R3	INTR3R2	INTR3R1	INTR3R0
bit 7							bit 0

Legend:	R/$\overline{W}$ = Readable, Writable bit if IOLOCK = 0		
R = Readable bit	W = Writable bit	U = Unimplemented bit, read as '0'	
-n = Value at POR	'1' = Bit is set	'0' = Bit is cleared	x = Bit is unknown

bit 7-5 **Unimplemented:** Read as '0'

bit 4-0 **INTR3R<4:0>:** Assign External Interrupt 3 (INT3) to the Corresponding RPn Pin bits

© 2011 Microchip Technology Inc.

REGISTER 10-10: RPINR4: PERIPHERAL PIN SELECT INPUT REGISTER 4 (BANKED EEAh)

U-0	U-0	U-0	R/$\overline{W}$-1	R/$\overline{W}$-1	R/$\overline{W}$-1	R/$\overline{W}$-1	R/$\overline{W}$-1
—	—	—	T0CKR4	T0CKR3	T0CKR2	T0CKR1	T0CKR0
bit 7							bit 0

Legend:	R/$\overline{W}$ = Readable, Writable bit if IOLOCK = 0		
R = Readable bit	W = Writable bit	U = Unimplemented bit, read as '0'	
-n = Value at POR	'1' = Bit is set	'0' = Bit is cleared	x = Bit is unknown

bit 7-5 **Unimplemented:** Read as '0'

bit 4-0 **T0CKR<4:0>:** Timer0 External Clock Input (T0CKI) to the Corresponding RPn Pin bits

REGISTER 10-11: RPINR6: PERIPHERAL PIN SELECT INPUT REGISTER 6 (BANKED EECh)

U-0	U-0	U-0	R/$\overline{W}$-1	R/$\overline{W}$-1	R/$\overline{W}$-1	R/$\overline{W}$-1	R/$\overline{W}$-1
—	—	—	T3CKR4	T3CKR3	T3CKR2	T3CKR1	T3CKR0
bit 7							bit 0

Legend:	R/$\overline{W}$ = Readable, Writable bit if IOLOCK = 0		
R = Readable bit	W = Writable bit	U = Unimplemented bit, read as '0'	
-n = Value at POR	'1' = Bit is set	'0' = Bit is cleared	x = Bit is unknown

bit 7-5 **Unimplemented:** Read as '0'

bit 4-0 **T3CKR<4:0>:** Timer 3 External Clock Input (T3CKI) to the Corresponding RPn Pin bits

REGISTER 10-12: RPINR7: PERIPHERAL PIN SELECT INPUT REGISTER 7 (BANKED EEDh)

U-0	U-0	U-0	R/$\overline{W}$-1	R/$\overline{W}$-1	R/$\overline{W}$-1	R/$\overline{W}$-1	R/$\overline{W}$-1
—	—	—	IC1R4	IC1R3	IC1R2	IC1R1	IC1R0
bit 7							bit 0

Legend:	R/$\overline{W}$ = Readable, Writable bit if IOLOCK = 0		
R = Readable bit	W = Writable bit	U = Unimplemented bit, read as '0'	
-n = Value at POR	'1' = Bit is set	'0' = Bit is cleared	x = Bit is unknown

bit 7-5 **Unimplemented:** Read as '0'

bit 4-0 **IC1R<4:0>:** Assign Input Capture 1 (ECCP1) to the Corresponding RPn Pin bits

REGISTER 10-13: RPINR8: PERIPHERAL PIN SELECT INPUT REGISTER 8 (BANKED EEEh)

U-0	U-0	U-0	R/$\overline{W}$-1	R/$\overline{W}$-1	R/$\overline{W}$-1	R/$\overline{W}$-1	R/$\overline{W}$-1
—	—	—	IC2R4	IC2R3	IC2R2	IC2R1	IC2R0
bit 7							bit 0

Legend:	R/$\overline{W}$ = Readable, Writable bit if IOLOCK = 0		
R = Readable bit	W = Writable bit	U = Unimplemented bit, read as '0'	
-n = Value at POR	'1' = Bit is set	'0' = Bit is cleared	x = Bit is unknown

bit 7-5 **Unimplemented:** Read as '0'

bit 4-0 **IC2R<4:0>:** Assign Input Capture 2 (ECCP2) to the Corresponding RPn Pin bits

REGISTER 10-14: RPINR12: PERIPHERAL PIN SELECT INPUT REGISTER 12 (BANKED EF2h)

U-0	U-0	U-0	R/$\overline{W}$-1	R/$\overline{W}$-1	R/$\overline{W}$-1	R/$\overline{W}$-1	R/$\overline{W}$-1
—	—	—	T1GR4	T1GR3	T1GR2	T1GR1	T1GR0
bit 7							bit 0

Legend:	R/$\overline{W}$ = Readable, Writable bit if IOLOCK = 0		
R = Readable bit	W = Writable bit	U = Unimplemented bit, read as '0'	
-n = Value at POR	'1' = Bit is set	'0' = Bit is cleared	x = Bit is unknown

bit 7-5 **Unimplemented:** Read as '0'

bit 4-0 **T1GR<4:0>:** Timer1 Gate Input (T1G) to the Corresponding RPn Pin bits

REGISTER 10-15: RPINR13: PERIPHERAL PIN SELECT INPUT REGISTER 13 (BANKED EF3h)

U-0	U-0	U-0	R/$\overline{W}$-1	R/$\overline{W}$-1	R/$\overline{W}$-1	R/$\overline{W}$-1	R/$\overline{W}$-1
—	—	—	T3GR4	T3GR3	T3GR2	T3GR1	T3GR0
bit 7							bit 0

Legend:	R/$\overline{W}$ = Readable, Writable bit if IOLOCK = 0		
R = Readable bit	W = Writable bit	U = Unimplemented bit, read as '0'	
-n = Value at POR	'1' = Bit is set	'0' = Bit is cleared	x = Bit is unknown

bit 7-5 **Unimplemented:** Read as '0'

bit 4-0 **T3GR<4:0>:** Timer3 Gate Input (T3G) to the Corresponding RPn Pin bits

© 2011 Microchip Technology Inc.

REGISTER 10-16: RPINR16: PERIPHERAL PIN SELECT INPUT REGISTER 16 (BANKED EF6h)

U-0	U-0	U-0	R/$\overline{W}$-1	R/$\overline{W}$-1	R/$\overline{W}$-1	R/$\overline{W}$-1	R/$\overline{W}$-1
—	—	—	RX2DT2R4	RX2DT2R3	RX2DT2R2	RX2DT2R1	RX2DT2R0
bit 7							bit 0

Legend:	R/$\overline{W}$ = Readable, Writable bit if IOLOCK = 0		
R = Readable bit	W = Writable bit	U = Unimplemented bit, read as '0'	
-n = Value at POR	'1' = Bit is set	'0' = Bit is cleared	x = Bit is unknown

bit 7-5 **Unimplemented:** Read as '0'

bit 4-0 **RX2DT2R<4:0>:** EUSART2 Synchronous/Asynchronous Receive (RX2/DT2) to the Corresponding RPn Pin bits

REGISTER 10-17: RPINR17: PERIPHERAL PIN SELECT INPUT REGISTER 17 (BANKED EF7h)

U-0	U-0	U-0	R/$\overline{W}$-1	R/$\overline{W}$-1	R/$\overline{W}$-1	R/$\overline{W}$-1	R/$\overline{W}$-1
—	—	—	CK2R4	CK2R3	CK2R2	CK2R1	CK2R0
bit 7							bit 0

Legend:	R/$\overline{W}$ = Readable, Writable bit if IOLOCK = 0		
R = Readable bit	W = Writable bit	U = Unimplemented bit, read as '0'	
-n = Value at POR	'1' = Bit is set	'0' = Bit is cleared	x = Bit is unknown

bit 7-5 **Unimplemented:** Read as '0'

bit 4-0 **CK2R<4:0>:** EUSART2 Clock Input (CK2) to the Corresponding RPn Pin bits

REGISTER 10-18: RPINR21: PERIPHERAL PIN SELECT INPUT REGISTER 21 (BANKED EFBh)

U-0	U-0	U-0	R/$\overline{W}$-1	R/$\overline{W}$-1	R/$\overline{W}$-1	R/$\overline{W}$-1	R/$\overline{W}$-1
—	—	—	SDI2R4	SDI2R3	SDI2R2	SDI2R1	SDI2R0
bit 7							bit 0

Legend:	R/$\overline{W}$ = Readable, Writable bit if IOLOCK = 0		
R = Readable bit	W = Writable bit	U = Unimplemented bit, read as '0'	
-n = Value at POR	'1' = Bit is set	'0' = Bit is cleared	x = Bit is unknown

bit 7-5 **Unimplemented:** Read as '0'

bit 4-0 **SDI2R<4:0>:** Assign SPI2 Data Input (SDI2) to the Corresponding RPn Pin bits

REGISTER 10-19: RPINR22: PERIPHERAL PIN SELECT INPUT REGISTER 22 (BANKED EFCh)

U-0	U-0	U-0	R/$\overline{W}$-1	R/$\overline{W}$-1	R/$\overline{W}$-1	R/$\overline{W}$-1	R/$\overline{W}$-1
—	—	—	SCK2R4	SCK2R3	SCK2R2	SCK2R1	SCK2R0
bit 7							bit 0

Legend:	R/$\overline{W}$ = Readable, Writable bit if IOLOCK = 0		
R = Readable bit	W = Writable bit	U = Unimplemented bit, read as '0'	
-n = Value at POR	'1' = Bit is set	'0' = Bit is cleared	x = Bit is unknown

bit 7-5 **Unimplemented:** Read as '0'

bit 4-0 **SCK2R<4:0>:** Assign SPI2 Clock Input (SCK2) to the Corresponding RPn Pin bits

REGISTER 10-20: RPINR23: PERIPHERAL PIN SELECT INPUT REGISTER 23 (BANKED EFDh)

U-0	U-0	U-0	R/$\overline{W}$-1	R/$\overline{W}$-1	R/$\overline{W}$-1	R/$\overline{W}$-1	R/$\overline{W}$-1
—	—	—	SS2R4	SS2R3	SS2R2	SS2R1	SS2R0
bit 7							bit 0

Legend:	R/$\overline{W}$ = Readable, Writable bit if IOLOCK = 0		
R = Readable bit	W = Writable bit	U = Unimplemented bit, read as '0'	
-n = Value at POR	'1' = Bit is set	'0' = Bit is cleared	x = Bit is unknown

bit 7-5 **Unimplemented:** Read as '0'

bit 4-0 **SS2R<4:0>:** Assign SPI2 Slave Select Input (SS2IN) to the Corresponding RPn Pin bits

REGISTER 10-21: RPINR24: PERIPHERAL PIN SELECT INPUT REGISTER 24 (BANKED EFEh)

U-0	U-0	U-0	R/$\overline{W}$-1	R/$\overline{W}$-1	R/$\overline{W}$-1	R/$\overline{W}$-1	R/$\overline{W}$-1
—	—	—	OCFAR4	OCFAR3	OCFAR2	OCFAR1	OCFAR0
bit 7							bit 0

Legend:	R/$\overline{W}$ = Readable, Writable bit if IOLOCK = 0		
R = Readable bit	W = Writable bit	U = Unimplemented bit, read as '0'	
-n = Value at POR	'1' = Bit is set	'0' = Bit is cleared	x = Bit is unknown

bit 7-5 **Unimplemented:** Read as '0'

bit 4-0 **OCFAR<4:0>:** Assign PWM Fault Input (FLT0) to the Corresponding RPn Pin bits

© 2011 Microchip Technology Inc.

REGISTER 10-22: RPOR0: PERIPHERAL PIN SELECT OUTPUT REGISTER 0 (BANKED EC6h)

U-0	U-0	U-0	R/$\overline{W}$-0	R/$\overline{W}$-0	R/$\overline{W}$-0	R/$\overline{W}$-0	R/$\overline{W}$-0
—	—	—	RP0R4	RP0R3	RP0R2	RP0R1	RP0R0
bit 7							bit 0

Legend:	R/$\overline{W}$ = Readable, Writable bit if IOLOCK = 0		
R = Readable bit	W = Writable bit	U = Unimplemented bit, read as '0'	
-n = Value at POR	'1' = Bit is set	'0' = Bit is cleared	x = Bit is unknown

bit 7-5 **Unimplemented:** Read as '0'

bit 4-0 **RP0R<4:0>:** Peripheral Output Function is Assigned to RP0 Output Pin bits
(see Table 10-14 for peripheral function numbers)

REGISTER 10-23: RPOR1: PERIPHERAL PIN SELECT OUTPUT REGISTER 1 (BANKED EC7h)

U-0	U-0	U-0	R/$\overline{W}$-0	R/$\overline{W}$-0	R/$\overline{W}$-0	R/$\overline{W}$-0	R/$\overline{W}$-0
—	—	—	RP1R4	RP1R3	RP1R2	RP1R1	RP1R0
bit 7							bit 0

Legend:	R/$\overline{W}$ = Readable, Writable bit if IOLOCK = 0		
R = Readable bit	W = Writable bit	U = Unimplemented bit, read as '0'	
-n = Value at POR	'1' = Bit is set	'0' = Bit is cleared	x = Bit is unknown

bit 7-5 **Unimplemented:** Read as '0'

bit 4-0 **RP1R<4:0>:** Peripheral Output Function is Assigned to RP1 Output Pin bits
(see Table 10-14 for peripheral function numbers)

REGISTER 10-24: RPOR2: PERIPHERAL PIN SELECT OUTPUT REGISTER 2 (BANKED EC8h)

U-0	U-0	U-0	R/$\overline{W}$-0	R/$\overline{W}$-0	R/$\overline{W}$-0	R/$\overline{W}$-0	R/$\overline{W}$-0
—	—	—	RP2R4	RP2R3	RP2R2	RP2R1	RP2R0
bit 7							bit 0

Legend:	R/$\overline{W}$ = Readable, Writable bit if IOLOCK = 0		
R = Readable bit	W = Writable bit	U = Unimplemented bit, read as '0'	
-n = Value at POR	'1' = Bit is set	'0' = Bit is cleared	x = Bit is unknown

bit 7-5 **Unimplemented:** Read as '0'

bit 4-0 **RP2R<4:0>:** Peripheral Output Function is Assigned to RP2 Output Pin bits
(see Table 10-14 for peripheral function numbers)

REGISTER 10-25: RPOR3: PERIPHERAL PIN SELECT OUTPUT REGISTER 3 (BANKED EC9h)

U-0	U-0	U-0	R/$\overline{W}$-0	R/$\overline{W}$-0	R/$\overline{W}$-0	R/$\overline{W}$-0	R/$\overline{W}$-0
—	—	—	RP3R4	RP3R3	RP3R2	RP3R1	RP3R0
bit 7							bit 0

Legend:	R/$\overline{W}$ = Readable, Writable bit if IOLOCK = 0		
R = Readable bit	W = Writable bit	U = Unimplemented bit, read as '0'	
-n = Value at POR	'1' = Bit is set	'0' = Bit is cleared	x = Bit is unknown

bit 7-5 **Unimplemented:** Read as '0'

bit 4-0 **RP3R<4:0>:** Peripheral Output Function is Assigned to RP3 Output Pin bits
(see Table 10-14 for peripheral function numbers)

REGISTER 10-26: RPOR4: PERIPHERAL PIN SELECT OUTPUT REGISTER 4 (BANKED ECAh)

U-0	U-0	U-0	R/$\overline{W}$-0	R/$\overline{W}$-0	R/$\overline{W}$-0	R/$\overline{W}$-0	R/$\overline{W}$-0
—	—	—	RP4R4	RP4R3	RP4R2	RP4R1	RP4R0
bit 7							bit 0

Legend:	R/$\overline{W}$ = Readable, Writable bit if IOLOCK = 0		
R = Readable bit	W = Writable bit	U = Unimplemented bit, read as '0'	
-n = Value at POR	'1' = Bit is set	'0' = Bit is cleared	x = Bit is unknown

bit 7-5 **Unimplemented:** Read as '0'

bit 4-0 **RP4R<4:0>:** Peripheral Output Function is Assigned to RP4 Output Pin bits
(see Table 10-14 for peripheral function numbers)

REGISTER 10-27: RPOR5: PERIPHERAL PIN SELECT OUTPUT REGISTER 5 (BANKED ECBh)

U-0	U-0	U-0	R/$\overline{W}$-0	R/$\overline{W}$-0	R/$\overline{W}$-0	R/$\overline{W}$-0	R/$\overline{W}$-0
—	—	—	RP5R4	RP5R3	RP5R2	RP5R1	RP5R0
bit 7							bit 0

Legend:	R/$\overline{W}$ = Readable, Writable bit if IOLOCK = 0		
R = Readable bit	W = Writable bit	U = Unimplemented bit, read as '0'	
-n = Value at POR	'1' = Bit is set	'0' = Bit is cleared	x = Bit is unknown

bit 7-5 **Unimplemented:** Read as '0'

bit 4-0 **RP5R<4:0>:** Peripheral Output Function is Assigned to RP5 Output Pin bits
(see Table 10-14 for peripheral function numbers)

© 2011 Microchip Technology Inc.

REGISTER 10-28: RPOR6: PERIPHERAL PIN SELECT OUTPUT REGISTER 6 (BANKED ECCh)

U-0	U-0	U-0	R/$\overline{W}$-0	R/$\overline{W}$-0	R/$\overline{W}$-0	R/$\overline{W}$-0	R/$\overline{W}$-0
—	—	—	RP6R4	RP6R3	RP6R2	RP6R1	RP6R0
bit 7							bit 0

Legend:	R/$\overline{W}$ = Readable, Writable bit if IOLOCK = 0		
R = Readable bit	W = Writable bit	U = Unimplemented bit, read as '0'	
-n = Value at POR	'1' = Bit is set	'0' = Bit is cleared	x = Bit is unknown

bit 7-5 **Unimplemented:** Read as '0'

bit 4-0 **RP6R<4:0>:** Peripheral Output Function is Assigned to RP6 Output Pin bits
(see Table 10-14 for peripheral function numbers)

REGISTER 10-29: RPOR7: PERIPHERAL PIN SELECT OUTPUT REGISTER 7 (BANKED ECDh)

U-0	U-0	U-0	R/$\overline{W}$-0	R/$\overline{W}$-0	R/$\overline{W}$-0	R/$\overline{W}$-0	R/$\overline{W}$-0
—	—	—	RP7R4	RP7R3	RP7R2	RP7R1	RP7R0
bit 7							bit 0

Legend:	R/$\overline{W}$ = Readable, Writable bit if IOLOCK = 0		
R = Readable bit	W = Writable bit	U = Unimplemented bit, read as '0'	
-n = Value at POR	'1' = Bit is set	'0' = Bit is cleared	x = Bit is unknown

bit 7-5 **Unimplemented:** Read as '0'

bit 4-0 **RP7R<4:0>:** Peripheral Output Function is Assigned to RP7 Output Pin bits
(see Table 10-14 for peripheral function numbers)

REGISTER 10-30: RPOR8: PERIPHERAL PIN SELECT OUTPUT REGISTER 8 (BANKED ECEh)

U-0	U-0	U-0	R/$\overline{W}$-0	R/$\overline{W}$-0	R/$\overline{W}$-0	R/$\overline{W}$-0	R/$\overline{W}$-0
—	—	—	RP8R4	RP8R3	RP8R2	RP8R1	RP8R0
bit 7							bit 0

Legend:	R/$\overline{W}$ = Readable, Writable bit if IOLOCK = 0		
R = Readable bit	W = Writable bit	U = Unimplemented bit, read as '0'	
-n = Value at POR	'1' = Bit is set	'0' = Bit is cleared	x = Bit is unknown

bit 7-5 **Unimplemented:** Read as '0'

bit 4-0 **RP8R<4:0>:** Peripheral Output Function is Assigned to RP8 Output Pin bits
(see Table 10-14 for peripheral function numbers)

REGISTER 10-31: RPOR9: PERIPHERAL PIN SELECT OUTPUT REGISTER 9 (BANKED ECFh)

U-0	U-0	U-0	R/$\overline{W}$-0	R/$\overline{W}$-0	R/$\overline{W}$-0	R/$\overline{W}$-0	R/$\overline{W}$-0
—	—	—	RP9R4	RP9R3	RP9R2	RP9R1	RP9R0
bit 7							bit 0

Legend:	R/$\overline{W}$ = Readable, Writable bit if IOLOCK = 0		
R = Readable bit	W = Writable bit	U = Unimplemented bit, read as '0'	
-n = Value at POR	'1' = Bit is set	'0' = Bit is cleared	x = Bit is unknown

bit 7-5 **Unimplemented:** Read as '0'

bit 4-0 **RP9R<4:0>:** Peripheral Output Function is Assigned to RP9 Output Pin bits
(see Table 10-14 for peripheral function numbers)

REGISTER 10-32: RPOR10: PERIPHERAL PIN SELECT OUTPUT REGISTER 10 (BANKED ED0h)

U-0	U-0	U-0	R/$\overline{W}$-0	R/$\overline{W}$-0	R/$\overline{W}$-0	R/$\overline{W}$-0	R/$\overline{W}$-0
—	—	—	RP10R4	RP10R3	RP10R2	RP10R1	RP10R0
bit 7							bit 0

Legend:	R/$\overline{W}$ = Readable, Writable bit if IOLOCK = 0		
R = Readable bit	W = Writable bit	U = Unimplemented bit, read as '0'	
-n = Value at POR	'1' = Bit is set	'0' = Bit is cleared	x = Bit is unknown

bit 7-5 **Unimplemented:** Read as '0'

bit 4-0 **RP10R<4:0>:** Peripheral Output Function is Assigned to RP10 Output Pin bits
(see Table 10-14 for peripheral function numbers)

REGISTER 10-33: RPOR11: PERIPHERAL PIN SELECT OUTPUT REGISTER 11 (BANKED ED1h)

U-0	U-0	U-0	R/$\overline{W}$-0	R/$\overline{W}$-0	R/$\overline{W}$-0	R/$\overline{W}$-0	R/$\overline{W}$-0
—	—	—	RP11R4	RP11R3	RP11R2	RP11R1	RP11R0
bit 7							bit 0

Legend:	R/$\overline{W}$ = Readable, Writable bit if IOLOCK = 0		
R = Readable bit	W = Writable bit	U = Unimplemented bit, read as '0'	
-n = Value at POR	'1' = Bit is set	'0' = Bit is cleared	x = Bit is unknown

bit 7-5 **Unimplemented:** Read as '0'

bit 4-0 **RP11R<4:0>:** Peripheral Output Function is Assigned to RP11 Output Pin bits
(see Table 10-14 for peripheral function numbers)

© 2011 Microchip Technology Inc.

REGISTER 10-34: RPOR12: PERIPHERAL PIN SELECT OUTPUT REGISTER 12 (BANKED ED2h)

U-0	U-0	U-0	R/$\overline{W}$-0	R/$\overline{W}$-0	R/$\overline{W}$-0	R/$\overline{W}$-0	R/$\overline{W}$-0
—	—	—	RP12R4	RP12R3	RP12R2	RP12R1	RP12R0
bit 7							bit 0

Legend:	R/$\overline{W}$ = Readable, Writable bit if IOLOCK = 0		
R = Readable bit	W = Writable bit	U = Unimplemented bit, read as '0'	
-n = Value at POR	'1' = Bit is set	'0' = Bit is cleared	x = Bit is unknown

bit 7-5 **Unimplemented:** Read as '0'

bit 4-0 **RP12R<4:0>:** Peripheral Output Function is Assigned to RP12 Output Pin bits
(see Table 10-14 for peripheral function numbers)

REGISTER 10-35: RPOR13: PERIPHERAL PIN SELECT OUTPUT REGISTER 13 (BANKED ED3h)

U-0	U-0	U-0	R/$\overline{W}$-0	R/$\overline{W}$-0	R/$\overline{W}$-0	R/$\overline{W}$-0	R/$\overline{W}$-0
—	—	—	RP13R4	RP13R3	RP13R2	RP13R1	RP13R0
bit 7							bit 0

Legend:	R/$\overline{W}$ = Readable, Writable bit if IOLOCK = 0		
R = Readable bit	W = Writable bit	U = Unimplemented bit, read as '0'	
-n = Value at POR	'1' = Bit is set	'0' = Bit is cleared	x = Bit is unknown

bit 7-5 **Unimplemented:** Read as '0'

bit 4-0 **RP13R<4:0>:** Peripheral Output Function is Assigned to RP13 Output Pin bits
(see Table 10-14 for peripheral function numbers)

REGISTER 10-36: RPOR17: PERIPHERAL PIN SELECT OUTPUT REGISTER 17 (BANKED ED7h)

U-0	U-0	U-0	R/$\overline{W}$-0	R/$\overline{W}$-0	R/$\overline{W}$-0	R/$\overline{W}$-0	R/$\overline{W}$-0
—	—	—	RP17R4	RP17R3	RP17R2	RP17R1	RP17R0
bit 7							bit 0

Legend:	R/$\overline{W}$ = Readable, Writable bit if IOLOCK = 0		
R = Readable bit	W = Writable bit	U = Unimplemented bit, read as '0'	
-n = Value at POR	'1' = Bit is set	'0' = Bit is cleared	x = Bit is unknown

bit 7-5 **Unimplemented:** Read as '0'

bit 4-0 **RP17R<4:0>:** Peripheral Output Function is Assigned to RP17 Output Pin bits
(see Table 10-14 for peripheral function numbers)

REGISTER 10-37: RPOR18: PERIPHERAL PIN SELECT OUTPUT REGISTER 18 (BANKED ED8h)

U-0	U-0	U-0	R/$\overline{W}$-0	R/$\overline{W}$-0	R/$\overline{W}$-0	R/$\overline{W}$-0	R/$\overline{W}$-0
—	—	—	RP18R4	RP18R3	RP18R2	RP18R1	RP18R0
bit 7							bit 0

Legend:	R/$\overline{W}$ = Readable, Writable bit if IOLOCK = 0		
R = Readable bit	W = Writable bit	U = Unimplemented bit, read as '0'	
-n = Value at POR	'1' = Bit is set	'0' = Bit is cleared	x = Bit is unknown

bit 7-5 **Unimplemented:** Read as '0'

bit 4-0 **RP18R<4:0>:** Peripheral Output Function is Assigned to RP18 Output Pin bits
(see Table 10-14 for peripheral function numbers)

REGISTER 10-38: RPOR19: PERIPHERAL PIN SELECT OUTPUT REGISTER 19 (BANKED ED9h)(1)

U-0	U-0	U-0	R/$\overline{W}$-0	R/$\overline{W}$-0	R/$\overline{W}$-0	R/$\overline{W}$-0	R/$\overline{W}$-0
—	—	—	RP19R4	RP19R3	RP19R2	RP19R1	RP19R0
bit 7							bit 0

Legend:	R/$\overline{W}$ = Readable, Writable bit if IOLOCK = 0		
R = Readable bit	W = Writable bit	U = Unimplemented bit, read as '0'	
-n = Value at POR	'1' = Bit is set	'0' = Bit is cleared	x = Bit is unknown

bit 7-5 **Unimplemented:** Read as '0'

bit 4-0 **RP19R<4:0>:** Peripheral Output Function is Assigned to RP19 Output Pin bits
(see Table 10-14 for peripheral function numbers)

Note 1: RP19 pins are not available on 28-pin devices.

REGISTER 10-39: RPOR20: PERIPHERAL PIN SELECT OUTPUT REGISTER 20 (BANKED EDAh)(1)

U-0	U-0	U-0	R/$\overline{W}$-0	R/$\overline{W}$-0	R/$\overline{W}$-0	R/$\overline{W}$-0	R/$\overline{W}$-0
—	—	—	RP20R4	RP20R3	RP20R2	RP20R1	RP20R0
bit 7							bit 0

Legend:	R/$\overline{W}$ = Readable, Writable bit if IOLOCK = 0		
R = Readable bit	W = Writable bit	U = Unimplemented bit, read as '0'	
-n = Value at POR	'1' = Bit is set	'0' = Bit is cleared	x = Bit is unknown

bit 7-5 **Unimplemented:** Read as '0'

bit 4-0 **RP20R<4:0>:** Peripheral Output Function is Assigned to RP20 Output Pin bits
(see Table 10-14 for peripheral function numbers)

Note 1: RP20 pins are not available on 28-pin devices.

© 2011 Microchip Technology Inc.

REGISTER 10-40: RPOR21: PERIPHERAL PIN SELECT OUTPUT REGISTER 21 (BANKED EDBh)(1)

U-0	U-0	U-0	R/$\overline{W}$-0	R/$\overline{W}$-0	R/$\overline{W}$-0	R/$\overline{W}$-0	R/$\overline{W}$-0
—	—	—	RP21R4	RP21R3	RP21R2	RP21R1	RP21R0
bit 7							bit 0

Legend:	R/$\overline{W}$ = Readable, Writable bit if IOLOCK = 0		
R = Readable bit	W = Writable bit	U = Unimplemented bit, read as '0'	
-n = Value at POR	'1' = Bit is set	'0' = Bit is cleared	x = Bit is unknown

bit 7-5 **Unimplemented:** Read as '0'

bit 4-0 **RP21R<4:0>:** Peripheral Output Function is Assigned to RP21 Output Pin bits
(see Table 10-14 for peripheral function numbers)

Note 1: RP21 pins are not available on 28-pin devices.

REGISTER 10-41: RPOR22: PERIPHERAL PIN SELECT OUTPUT REGISTER 22 (BANKED EDCh)(1)

U-0	U-0	U-0	R/$\overline{W}$-0	R/$\overline{W}$-0	R/$\overline{W}$-0	R/$\overline{W}$-0	R/$\overline{W}$-0
—	—	—	RP22R4	RP22R3	RP22R2	RP22R1	RP22R0
bit 7							bit 0

Legend:	R/$\overline{W}$ = Readable, Writable bit if IOLOCK = 0		
R = Readable bit	W = Writable bit	U = Unimplemented bit, read as '0'	
-n = Value at POR	'1' = Bit is set	'0' = Bit is cleared	x = Bit is unknown

bit 7-5 **Unimplemented:** Read as '0'

bit 4-0 **RP22R<4:0>:** Peripheral Output Function is Assigned to RP22 Output Pin bits
(see Table 10-14 for peripheral function numbers)

Note 1: RP22 pins are not available on 28-pin devices.

REGISTER 10-42: RPOR23: PERIPHERAL PIN SELECT OUTPUT REGISTER 23 (BANKED EDDh)(1)

U-0	U-0	U-0	R/$\overline{W}$-0	R/$\overline{W}$-0	R/$\overline{W}$-0	R/$\overline{W}$-0	R/$\overline{W}$-0
—	—	—	RP23R4	RP23R3	RP23R2	RP23R1	RP23R0
bit 7							bit 0

Legend:	R/$\overline{W}$ = Readable, Writable bit if IOLOCK = 0		
R = Readable bit	W = Writable bit	U = Unimplemented bit, read as '0'	
-n = Value at POR	'1' = Bit is set	'0' = Bit is cleared	x = Bit is unknown

bit 7-5 **Unimplemented:** Read as '0'

bit 4-0 **RP23R<4:0>:** Peripheral Output Function is Assigned to RP23 Output Pin bits
(see Table 10-14 for peripheral function numbers)

Note 1: RP23 pins are not available on 28-pin devices.

REGISTER 10-43: RPOR24: PERIPHERAL PIN SELECT OUTPUT REGISTER 24 (BANKED EDEh)(1)

U-0	U-0	U-0	R/$\overline{W}$-0	R/$\overline{W}$-0	R/$\overline{W}$-0	R/$\overline{W}$-0	R/$\overline{W}$-0
—	—	—	RP24R4	RP24R3	RP24R2	RP24R1	RP24R0
bit 7							bit 0

Legend:	R/$\overline{W}$ = Readable, Writable bit if IOLOCK = 0		
R = Readable bit	W = Writable bit	U = Unimplemented bit, read as '0'	
-n = Value at POR	'1' = Bit is set	'0' = Bit is cleared	x = Bit is unknown

bit 7-5 **Unimplemented:** Read as '0'

bit 4-0 **RP24R<4:0>:** Peripheral Output Function is Assigned to RP24 Output Pin bits (see Table 10-14 for peripheral function numbers)

Note 1: RP24 pins are not available on 28-pin devices.

© 2011 Microchip Technology Inc.

11.0 PARALLEL MASTER PORT (PMP)

The Parallel Master Port module (PMP) is an 8-bit parallel I/O module, specifically designed to communicate with a wide variety of parallel devices, such as communication peripherals, LCDs, external memory devices and microcontrollers. Because the interface to parallel peripherals varies significantly, the PMP is highly configurable. The PMP module can be configured to serve as either a PMP or as a Parallel Slave Port (PSP).

Key features of the PMP module are:

- Up to 16 bits of Addressing when Using Data/Address Multiplexing
- Up to 8 Programmable Address Lines
- One Chip Select Line
- Programmable Strobe Options:
  - Individual Read and Write Strobes or;
  - Read/$\overline{\text{Write}}$ Strobe with Enable Strobe
- Address Auto-Increment/Auto-Decrement
- Programmable Address/Data Multiplexing
- Programmable Polarity on Control Signals
- Legacy Parallel Slave Port Support
- Enhanced Parallel Slave Support:
  - Address Support
  - 4-Byte Deep, Auto-Incrementing Buffer
- Programmable Wait States
- Selectable Input Voltage Levels

FIGURE 11-1: PMP MODULE OVERVIEW

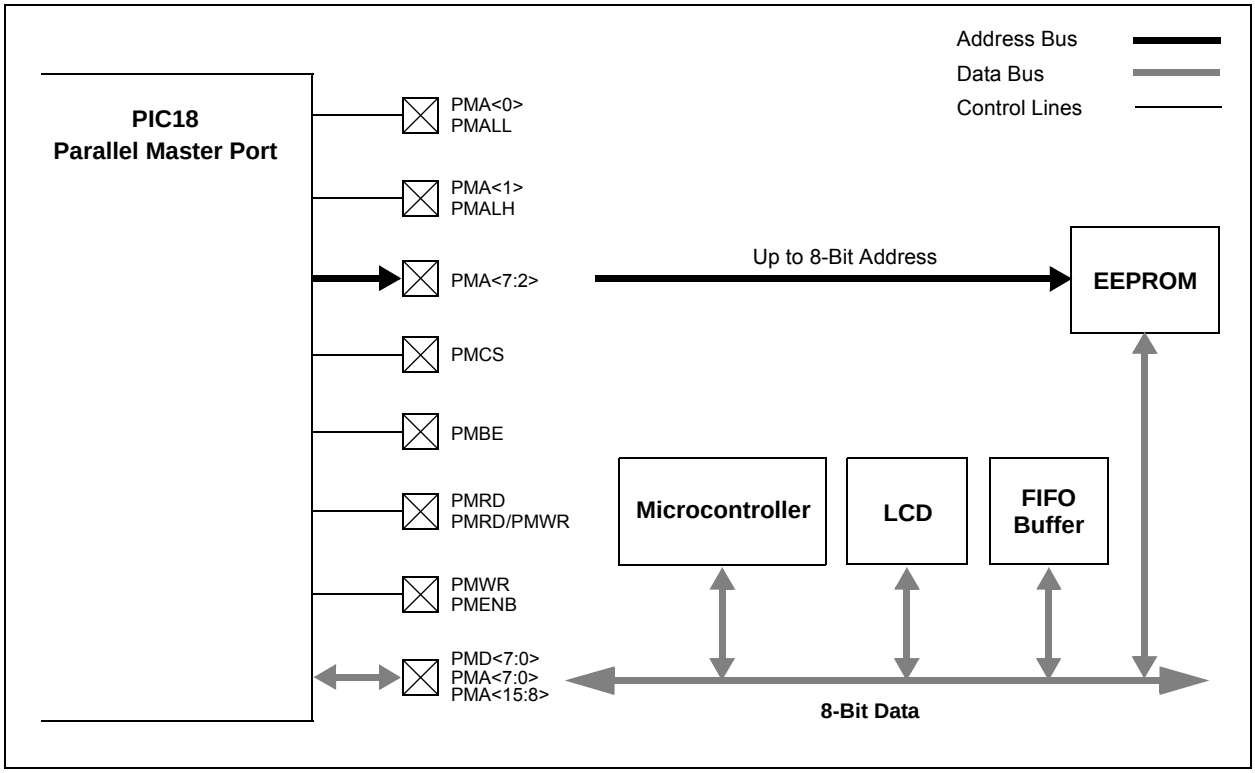

11.1 Module Registers

The PMP module has a total of 14 Special Function Registers (SFRs) for its operation, plus one additional register to set configuration options. Of these, eight registers are used for control and six are used for PMP data transfer.

11.1.1 CONTROL REGISTERS

The eight PMP Control registers are:

- PMCONH and PMCONL
- PMMODEH and PMMODEL
- PMSTATL and PMSTATH
- PMEH and PMEL

The PMCON registers (Register 11-1 and Register 11-2) control basic module operations, including turning the module on or off. They also configure address multiplexing and control strobe configuration.

The PMMODE registers (Register 11-3 and Register 11-4) configure the various Master and Slave modes, the data width and interrupt generation.

The PMEH and PMEL registers (Register 11-5 and Register 11-6) configure the module's operation at the hardware (I/O pin) level.

The PMSTAT registers (Register 11-5 and Register 11-6) provide status flags for the module's input and output buffers, depending on the operating mode.

REGISTER 11-1: PMCONH: PARALLEL PORT CONTROL REGISTER HIGH BYTE (BANKED F5Fh)(1)

R/W-0	U-0	U-0	R/W-0	R/W-0	R/W-0	R/W-0	R/W-0
PMPEN	—	—	ADRMUX1	ADRMUX0	PTBEEN	PTWREN	PTRDEN
bit 7							bit 0

Legend:			
R = Readable bit	W = Writable bit	U = Unimplemented bit, read as '0'	
-n = Value at POR	'1' = Bit is set	'0' = Bit is cleared	x = Bit is unknown

bit 7 **PMPEN:** Parallel Master Port Enable bit
1 = PMP is enabled
0 = PMP is disabled, no off-chip access is performed

bit 6-5 **Unimplemented:** Read as '0'

bit 4-3 **ADRMUX<1:0>:** Address/Data Multiplexing Selection bits
11 = Reserved
10 = All 16 bits of the address are multiplexed on PMD<7:0> pins
01 = Lower 8 bits of the address are multiplexed on PMD<7:0> pins (only eight bits of address are available in this mode)
00 = Address and data appear on separate pins (only eight bits of address are available in this mode)

bit 2 **PTBEEN:** Byte Enable Port Enable bit (16-Bit Master mode)
1 = PMBE port is enabled
0 = PMBE port is disabled

bit 1 **PTWREN:** Write Enable Strobe Port Enable bit
1 = PMWR/PMENB port is enabled
0 = PMWR/PMENB port is disabled

bit 0 **PTRDEN:** Read/Write Strobe Port Enable bit
1 = PMRD/PMWR port is enabled
0 = PMRD/PMWR port is disabled

Note 1: This register is only available on 44-pin devices.

© 2011 Microchip Technology Inc.

REGISTER 11-2: PMCONL: PARALLEL PORT CONTROL REGISTER LOW BYTE (BANKED F5Eh)(1)

R/W-0	R/W-0	R/W-0(2)	R/W-0	R/W-0(2)	R/W-0	R/W-0	R/W-0
CSF1	CSF0	ALP	—	CS1P	BEP	WRSP	RDSP
bit 7							bit 0

Legend:			
R = Readable bit	W = Writable bit	U = Unimplemented bit, read as '0'	
-n = Value at POR	'1' = Bit is set	'0' = Bit is cleared	x = Bit is unknown

bit 7-6 **CSF<1:0>:** Chip Select Function bits
- 11 = Reserved
- 10 = Chip select function is enabled and PMCS acts as chip select (in Master mode). Up to 13 address bits only can be generated.
- 01 = Reserved
- 00 = Chip select function is disabled (in Master mode). All 16 address bits can be generated.

bit 5 **ALP:** Address Latch Polarity bit(2)
- 1 = Active-high (PMALL and PMALH)
- 0 = Active-low ($\overline{\text{PMALL}}$ and $\overline{\text{PMALH}}$)

bit 4 **Unimplemented:** Maintain as '0'

bit 3 **CS1P:** Chip Select Polarity bit(2)
- 1 = Active-high (PMCS)
- 0 = Active-low ($\overline{\text{PMCS}}$)

bit 2 **BEP:** Byte Enable Polarity bit
- 1 = Byte enable is active-high (PMBE)
- 0 = Byte enable is active-low ($\overline{\text{PMBE}}$)

bit 1 **WRSP:** Write Strobe Polarity bit

For Slave modes and Master Mode 2 (PMMODEH<1:0> = 00, 01, 10):
- 1 = Write strobe is active-high (PMWR)
- 0 = Write strobe is active-low ($\overline{\text{PMWR}}$)

For Master Mode 1 (PMMODEH<1:0> = 11):
- 1 = Enable strobe is active-high (PMENB)
- 0 = Enable strobe is active-low ($\overline{\text{PMENB}}$)

bit 0 **RDSP:** Read Strobe Polarity bit

For Slave modes and Master Mode 2 (PMMODEH<1:0> = 00, 01, 10):
- 1 = Read strobe is active-high (PMRD)
- 0 = Read strobe is active-low ($\overline{\text{PMRD}}$)

For Master Mode 1 (PMMODEH<1:0> = 11):
- 1 = Read/write strobe is active-high (PMRD/PMWR)
- 0 = Read/write strobe is active-low ($\overline{\text{PMRD}}$/$\overline{\text{PMWR}}$)

Note 1: This register is only available on 44-pin devices.

2: These bits have no effect when their corresponding pins are used as address lines.

REGISTER 11-3: PMMODEH: PARALLEL PORT MODE REGISTER HIGH BYTE (BANKED F5Dh)(1)

R-0	R/W-0	R/W-0	R/W-0	R/W-0	R/W-0	R/W-0	R/W-0
BUSY	IRQM1	IRQM0	INCM1	INCM0	MODE16	MODE1	MODE0
bit 7							bit 0

Legend:			
R = Readable bit	W = Writable bit	U = Unimplemented bit, read as '0'	
-n = Value at POR	'1' = Bit is set	'0' = Bit is cleared	x = Bit is unknown

bit 7 **BUSY:** Busy bit (Master mode only)
1 = Port is busy
0 = Port is not busy

bit 6-5 **IRQM<1:0>:** Interrupt Request Mode bits
11 = Interrupt is generated when Read Buffer 3 is read or Write Buffer 3 is written (Buffered PSP mode), or on a read or write operation when PMA<1:0> = 11 (Addressable PSP mode only)
10 = No interrupt is generated, processor stall is activated
01 = Interrupt is generated at the end of the read/write cycle
00 = No interrupt is generated

bit 4-3 **INCM<1:0>:** Increment Mode bits
11 = PSP read and write buffers auto-increment (Legacy PSP mode only)
10 = Decrement ADDR<15,13:0> by 1 every read/write cycle
01 = Increment ADDR<15,13:0> by 1 every read/write cycle
00 = No increment or decrement of the address

bit 2 **MODE16:** 8/16-Bit Mode bit
1 = 16-bit mode: Data register is 16 bits, a read or write to the Data register invokes two 8-bit transfers
0 = 8-bit mode: Data register is 8 bits, a read or write to the Data register invokes one 8-bit transfer

bit 1-0 **MODE<1:0>:** Parallel Port Mode Select bits
11 = Master Mode 1 (PMCS, PMRD/PMWR, PMENB, PMBE, PMA<x:0> and PMD<7:0>)
10 = Master Mode 2 (PMCS, PMRD, PMWR, PMBE, PMA<x:0> and PMD<7:0>)
01 = Enhanced PSP, control signals (PMRD, PMWR, PMCS, PMD<7:0> and PMA<1:0>)
00 = Legacy Parallel Slave Port, control signals (PMRD, PMWR, PMCS and PMD<7:0>)

Note 1: This register is only available on 44-pin devices.

© 2011 Microchip Technology Inc.

REGISTER 11-4: PMMODEL: PARALLEL PORT MODE REGISTER LOW BYTE (BANKED F5Ch)(1)

R/W-0	R/W-0	R/W-0	R/W-0	R/W-0	R/W-0	R/W-0	R/W-0
WAITB1(2)	WAITB0(2)	WAITM3	WAITM2	WAITM1	WAITM0	WAITE1(2)	WAITE0(2)
bit 7							bit 0

Legend:			
R = Readable bit	W = Writable bit	U = Unimplemented bit, read as '0'	
-n = Value at POR	'1' = Bit is set	'0' = Bit is cleared	x = Bit is unknown

bit 7-6 **WAITB<1:0>:** Data Setup to Read/Write Wait State Configuration bits(2)
11 = Data wait of 4 TCY; multiplexed address phase of 4 TCY
10 = Data wait of 3 TCY; multiplexed address phase of 3 TCY
01 = Data wait of 2 TCY; multiplexed address phase of 2 TCY
00 = Data wait of 1 TCY; multiplexed address phase of 1 TCY

bit 5-2 **WAITM<3:0>:** Read to Byte Enable Strobe Wait State Configuration bits
1111 = Wait of additional 15 TCY
.
.
.
0001 = Wait of additional 1 TCY
0000 = No additional Wait cycles (operation forced into one TCY)

bit 1-0 **WAITE<1:0>:** Data Hold After Strobe Wait State Configuration bits(2)
11 = Wait of 4 TCY
10 = Wait of 3 TCY
01 = Wait of 2 TCY
00 = Wait of 1 TCY

Note 1: This register is only available on 44-pin devices.
2: WAITBx and WAITEx bits are ignored whenever WAITM<3:0> = 0000.

REGISTER 11-5: PMEH: PARALLEL PORT ENABLE REGISTER HIGH BYTE (BANKED F57h)(1)

R/W-0	R/W-0	R/W-0	R/W-0	R/W-0	R/W-0	R/W-0	R/W-0
—	PTEN14	—	—	—	—	—	—
bit 7							bit 0

Legend:			
R = Readable bit	W = Writable bit	U = Unimplemented bit, read as '0'	
-n = Value at POR	'1' = Bit is set	'0' = Bit is cleared	x = Bit is unknown

bit 7 **Unimplemented:** Maintain as '0'

bit 6 **PTEN14:** PMCS Port Enable bit
1 = PMCS chip select line
0 = PMCS functions as port I/O

bit 5-0 **Unimplemented:** Maintain as '0'

Note 1: This register is only available on 44-pin devices.

REGISTER 11-6: PMEL: PARALLEL PORT ENABLE REGISTER LOW BYTE (BANKED F56h)(1)

R/W-0	R/W-0	R/W-0	R/W-0	R/W-0	R/W-0	R/W-0	R/W-0
PTEN7	PTEN6	PTEN5	PTEN4	PTEN3	PTEN2	PTEN1	PTEN0
bit 7							bit 0

Legend:			
R = Readable bit	W = Writable bit	U = Unimplemented bit, read as '0'	
-n = Value at POR	'1' = Bit is set	'0' = Bit is cleared	x = Bit is unknown

bit 7-2 **PTEN<7:2>:** PMP Address Port Enable bits
1 = PMA<7:2> function as PMP address lines
0 = PMA<7:2> function as port I/O

bit 1-0 **PTEN<1:0>:** PMALH/PMALL Strobe Enable bits
1 = PMA<1:0> function as either PMA<1:0> or PMALH and PMALL
0 = PMA<1:0> pads function as port I/O

Note 1: This register is only available on 44-pin devices.

© 2011 Microchip Technology Inc.

REGISTER 11-7: PMSTATH: PARALLEL PORT STATUS REGISTER HIGH BYTE (BANKED F55h)(1)

R-0	R/W-0	U-0	U-0	R-0	R-0	R-0	R-0
IBF	IBOV	—	—	IB3F	IB2F	IB1F	IB0F
bit 7							bit 0

Legend:			
R = Readable bit	W = Writable bit	U = Unimplemented bit, read as '0'	
-n = Value at POR	'1' = Bit is set	'0' = Bit is cleared	x = Bit is unknown

bit 7 **IBF:** Input Buffer Full Status bit
1 = All writable Input Buffer registers are full
0 = Some or all of the writable Input Buffer registers are empty

bit 6 **IBOV:** Input Buffer Overflow Status bit
1 = A write attempt to a full Input Byte register occurred (must be cleared in software)
0 = No overflow occurred

bit 5-4 **Unimplemented:** Read as '0'

bit 3-0 **IB3F:IB0F:** Input Buffer x Status Full bits
1 = Input buffer contains data that has not been read (reading the buffer will clear this bit)
0 = Input buffer does not contain any unread data

Note 1: This register is only available on 44-pin devices.

REGISTER 11-8: PMSTATL: PARALLEL PORT STATUS REGISTER LOW BYTE (BANKED F54h)(1)

R-1	R/W-0	U-0	U-0	R-1	R-1	R-1	R-1
OBE	OBUF	—	—	OB3E	OB2E	OB1E	OB0E
bit 7							bit 0

Legend:			
R = Readable bit	W = Writable bit	U = Unimplemented bit, read as '0'	
-n = Value at POR	'1' = Bit is set	'0' = Bit is cleared	x = Bit is unknown

bit 7 **OBE:** Output Buffer Empty Status bit
1 = All readable Output Buffer registers are empty
0 = Some or all of the readable Output Buffer registers are full

bit 6 **OBUF:** Output Buffer Underflow Status bit
1 = A read occurred from an empty Output Byte register (must be cleared in software)
0 = No underflow occurred

bit 5-4 **Unimplemented:** Read as '0'

bit 3-0 **OB3E:OB0E:** Output Buffer x Status Empty bits
1 = Output buffer is empty (writing data to the buffer will clear this bit)
0 = Output buffer contains data that has not been transmitted

Note 1: This register is only available on 44-pin devices.

11.1.2 DATA REGISTERS

The PMP module uses eight registers for transferring data into and out of the microcontroller. They are arranged as four pairs to allow the option of 16-bit data operations:

- PMDIN1H and PMDIN1L
- PMDIN2H and PMDIN2L
- PMADDRH/PMDOUT1H and PMADDRL/PMDOUT1L
- PMDOUT2H and PMDOUT2L

The PMDIN1 register is used for incoming data in Slave modes, and both input and output data in Master modes. The PMDIN2 register is used for buffering input data in select Slave modes.

The PMADDR/PMDOUT1 registers are actually a single register pair. The name and function are dictated by the module's operating mode. In Master modes, the registers function as the PMADDRH and PMADDRL registers and contain the address of any incoming or outgoing data. In Slave modes, the registers function as PMDOUT1H and PMDOUT1L and are used for outgoing data.

PMADDRH differs from PMADDRL in that it can also have limited PMP control functions. When the module is operating in select Master mode configurations, the upper two bits of the register can be used to determine the operation of chip select signals. If these are not used, PMADDR simply functions to hold the upper 8 bits of the address. Register 11-9 provides the function of the individual bits in PMADDRH.

The PMDOUT2H and PMDOUT2L registers are only used in Buffered Slave modes and serve as a buffer for outgoing data.

11.1.3 PAD CONFIGURATION CONTROL REGISTER

In addition to the module level configuration options, the PMP module can also be configured at the I/O pin for electrical operation. This option allows users to select either the normal Schmitt Trigger input buffer on digital I/O pins shared with the PMP, or use TTL level compatible buffers instead. Buffer configuration is controlled by the PMPTTL bit in the PADCFG1 register.

© 2011 Microchip Technology Inc.

REGISTER 11-9: PMADDRH: PARALLEL PORT ADDRESS REGISTER HIGH BYTE (MASTER MODES ONLY) (ACCESS F6Fh)(1)

R/W-0	R/W-0	R/W-0	R/W-0	R/W-0	R/W-0	R/W-0	R/W-0
—	CS1	Parallel Master Port Address High Byte<13:8>					
bit 7							bit 0

Legend:			
R = Readable bit	W = Writable bit	U = Unimplemented bit, read as '0'	
-n = Value at POR	'1' = Bit is set	'0' = Bit is cleared	x = Bit is unknown

bit 7 **Unimplemented:** Maintain as '0'

bit 6 **CS1:** Chip Select bit
If PMCON<7:6> = 10:
1 = Chip select is active
0 = Chip select is inactive
If PMCON<7:6> = 11 or 00:
Bit functions as ADDR<14>.

bit 5-0 **Parallel Master Port Address:** High Byte<13:8> bits

Note 1: In Enhanced Slave mode, PMADDRH functions as PMDOUT1H, one of the Output Data Buffer registers.

REGISTER 11-10: PMADDRL: PARALLEL PORT ADDRESS REGISTER LOW BYTE (MASTER MODES ONLY) (ACCESS F6Eh)(1)

R/W-0	R/W-0	R/W-0	R/W-0	R/W-0	R/W-0	R/W-0	R/W-0
Parallel Master Port Address Low Byte<7:0>							
bit 7							bit 0

Legend:			
R = Readable bit	W = Writable bit	U = Unimplemented bit, read as '0'	
-n = Value at POR	'1' = Bit is set	'0' = Bit is cleared	x = Bit is unknown

bit 7-0 **Parallel Master Port Address:** Low Byte<7:0> bits

Note 1: In Enhanced Slave mode, PMADDRL functions as PMDOUT1L, one of the Output Data Buffer registers.

11.2 Slave Port Modes

The primary mode of operation for the module is configured using the MODE<1:0> bits in the PMMODEH register. The setting affects whether the module acts as a slave or a master and it determines the usage of the control pins.

11.2.1 LEGACY MODE (PSP)

In Legacy mode (PMMODEH<1:0> = 00 and PMPEN = 1), the module is configured as a Parallel Slave Port (PSP) with the associated enabled module pins dedicated to the module. In this mode, an external device, such as another microcontroller or microprocessor, can asynchronously read and write data using the 8-bit data bus (PMD<7:0>), the read (PMRD), write (PMWR) and chip select (PMCS1) inputs. It acts as a slave on the bus and responds to the read/write control signals.

Figure 11-2 displays the connection of the PSP. When chip select is active and a write strobe occurs (PMCS = 1 and PMWR = 1), the data from PMD<7:0> is captured into the PMDIN1L register.

FIGURE 11-2: LEGACY PARALLEL SLAVE PORT EXAMPLE

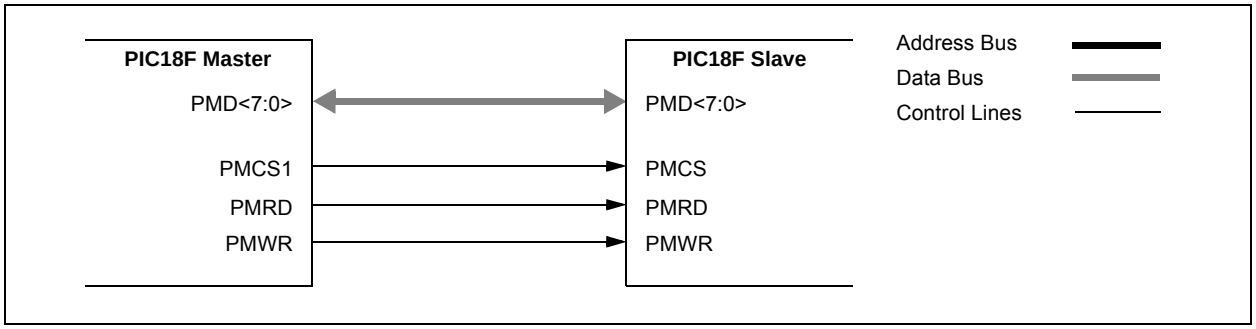

© 2011 Microchip Technology Inc.

11.2.2 WRITE TO SLAVE PORT

When chip select is active and a write strobe occurs (PMCS = 1 and PMWR = 1), the data from PMD<7:0> is captured into the lower PMDIN1L register. The PMPIF and IBF flag bits are set when the write ends.The timing for the control signals in Write mode is displayed in Figure 11-3. The polarity of the control signals are configurable.

11.2.3 READ FROM SLAVE PORT

When chip select is active and a read strobe occurs (PMCS = 1 and PMRD = 1), the data from the PMDOUT1L register (PMDOUT1L<7:0>) is presented onto PMD<7:0>. Figure 11-4 provides the timing for the control signals in Read mode.

FIGURE 11-3: PARALLEL SLAVE PORT WRITE WAVEFORMS

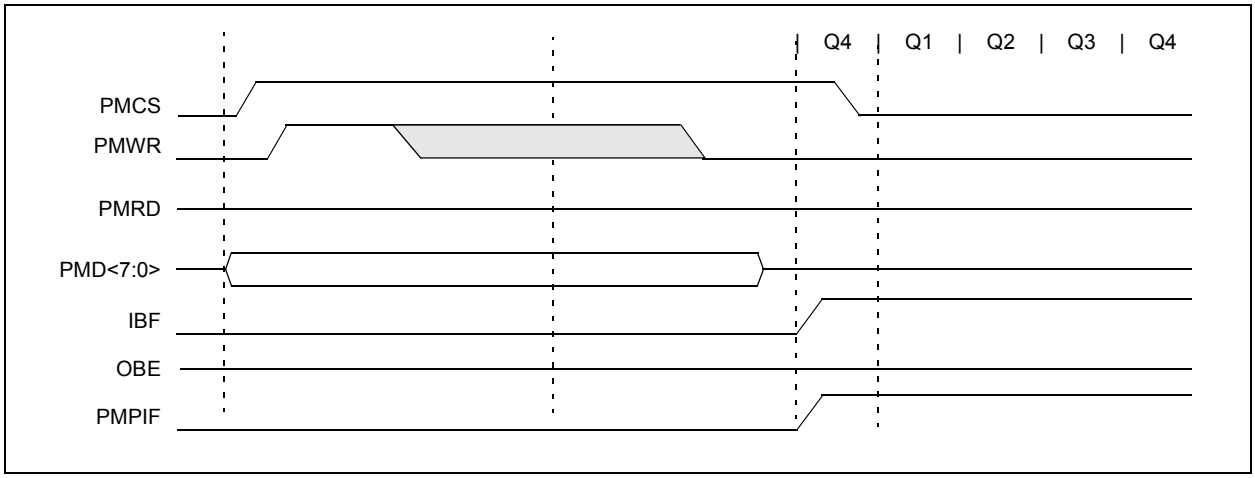

FIGURE 11-4: PARALLEL SLAVE PORT READ WAVEFORMS

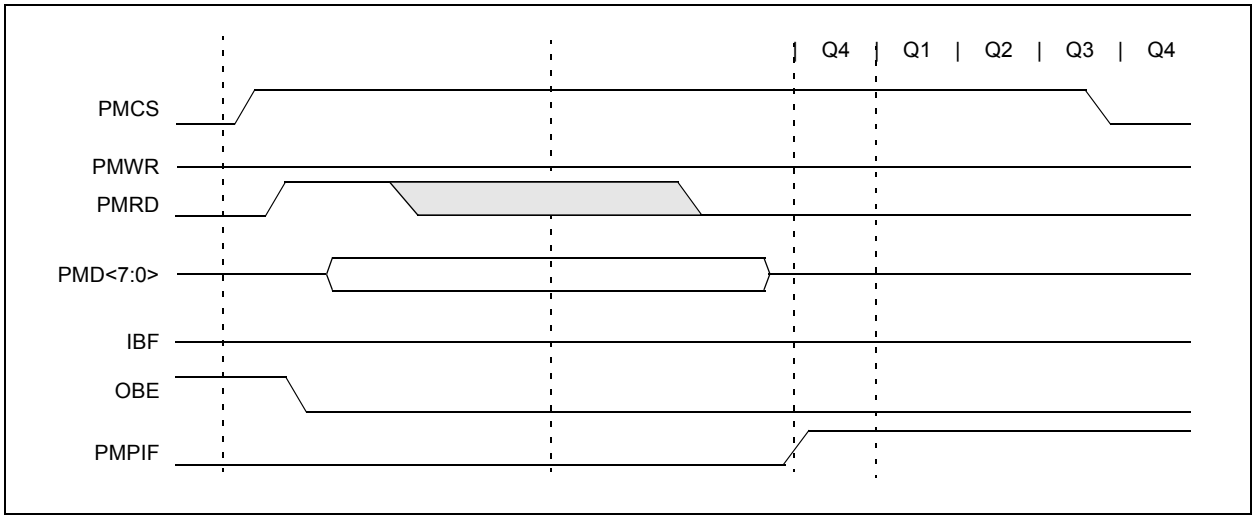

11.2.4 BUFFERED PARALLEL SLAVE PORT MODE

Buffered Parallel Slave Port mode is functionally identical to the legacy PSP mode with one exception, the implementation of 4-level read and write buffers. Buffered PSP mode is enabled by setting the INCM bits in the PMMODEH register. If the INCM<1:0> bits are set to '11', the PMP module will act as the Buffered PSP mode.

When the Buffered PSP mode is active, the PMDIN1L, PMDIN1H, PMDIN2L and PMDIN2H registers become the write buffers and the PMDOUT1L, PMDOUT1H, PMDOUT2L and PMDOUT2H registers become the read buffers. Buffers are numbered, 0 through 3, starting with the lower byte of PMDIN1L to PMDIN2H as the read buffers and PMDOUT1L to PMDOUT2H as the write buffers.

11.2.4.1 READ FROM SLAVE PORT

For read operations, the bytes will be sent out sequentially, starting with Buffer 0 (PMDOUT1L<7:0>) and ending with Buffer 3 (PMDOUT2H<7:0>) for every read strobe. The module maintains an internal pointer to keep track of which buffer is to be read. Each buffer has a corresponding read status bit, OBxE, in the PMSTATL register. This bit is cleared when a buffer contains data that has not been written to the bus and is set when data is written to the bus. If the current buffer location being read from is empty, a buffer underflow is generated, and the Buffer Overflow flag bit (OBUF) is set. If all four OBxE status bits are set, then the Output Buffer Empty flag (OBE) will also be set.

11.2.4.2 WRITE TO SLAVE PORT

For write operations, the data has to be stored sequentially, starting with Buffer 0 (PMDIN1L<7:0>) and ending with Buffer 3 (PMDIN2H<7:0>). As with read operations, the module maintains an internal pointer to the buffer that is to be written next.

The input buffers have their own write status bits, IBxF in the PMSTATH register. The bit is set when the buffer contains unread incoming data, and cleared when the data has been read. The flag bit is set on the write strobe. If a write occurs on a buffer when its associated IBxF bit is set, the Buffer Overflow flag, IBOV, is set; any incoming data in the buffer will be lost. If all four IBxF flags are set, the Input Buffer Full Flag (IBF) is set.

In Buffered Slave mode, the module can be configured to generate an interrupt on every read or write strobe (IRQM<1:0> = 01). It can be configured to generate an interrupt on a read from Read Buffer 3 or a write to Write Buffer 3, which is essentially an interrupt every fourth read or write strobe (RQM<1:0> = 11). When interrupting every fourth byte for input data, all input buffer registers should be read to clear the IBxF flags. If these flags are not cleared, then there is a risk of hitting an overflow condition.

FIGURE 11-5: PARALLEL MASTER/SLAVE CONNECTION BUFFERED EXAMPLE

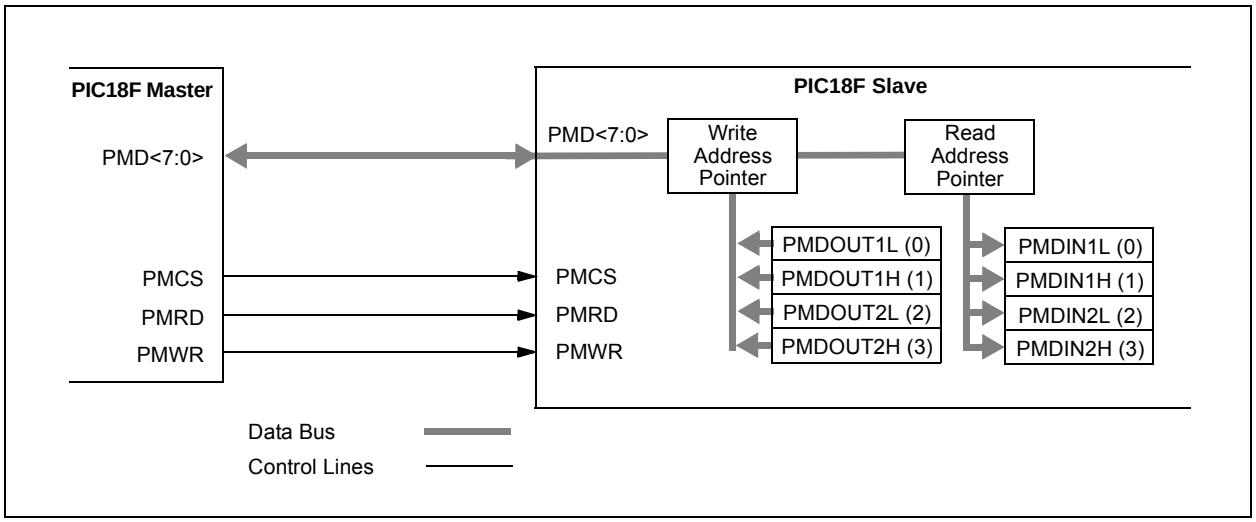

© 2011 Microchip Technology Inc.

11.2.5 ADDRESSABLE PARALLEL SLAVE PORT MODE

In the Addressable Parallel Slave Port mode (PMMODEH<1:0> = 01), the module is configured with two extra inputs, PMA<1:0>, which are the Address Lines 1 and 0. This makes the 4-byte buffer space directly addressable as fixed pairs of read and write buffers. As with Legacy Buffered mode, data is output from PMDOUT1L, PMDOUT1H, PMDOUT2L and PMDOUT2H, and is read in PMDIN1L, PMDIN1H, PMDIN2L and PMDIN2H. Table 11-1 provides the buffer addressing for the incoming address to the input and output registers.

TABLE 11-1: SLAVE MODE BUFFER ADDRESSING

PMA<1:0>	Output Register (Buffer)	Input Register (Buffer)
00	PMDOUT1L (0)	PMDIN1L (0)
01	PMDOUT1H (1)	PMDIN1H (1)
10	PMDOUT2L (2)	PMDIN2L (2)
11	PMDOUT2H((3)	PMDIN2H (3)

FIGURE 11-6: PARALLEL MASTER/SLAVE CONNECTION ADDRESSED BUFFER EXAMPLE

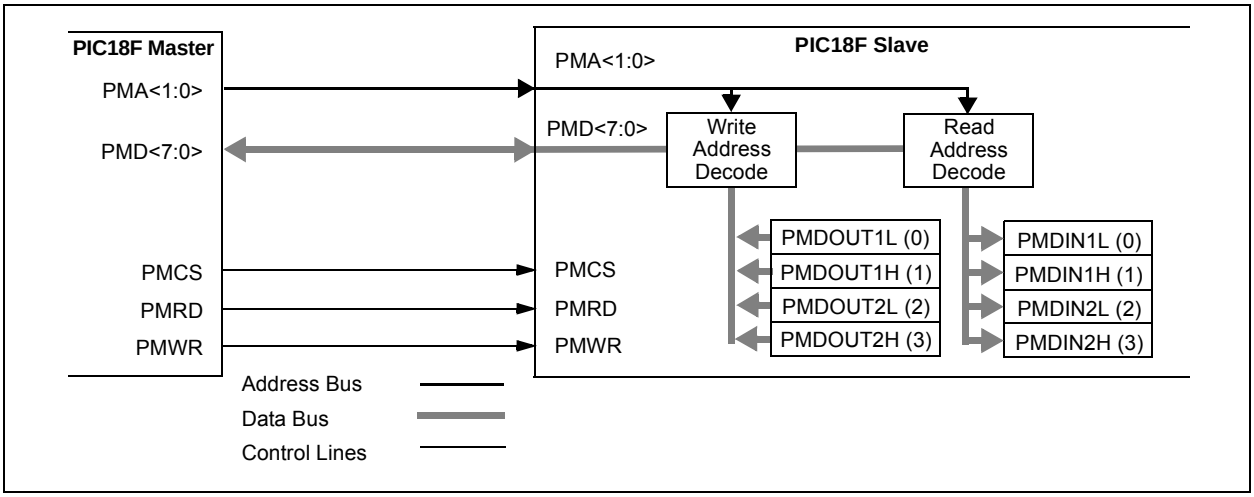

11.2.5.1 READ FROM SLAVE PORT

When chip select is active and a read strobe occurs (PMCS = 1 and PMRD = 1), the data from one of the four output bytes is presented onto PMD<7:0>. Which byte is read depends on the 2-bit address placed on ADDR<1:0>. Table 11-1 provides the corresponding output registers and their associated address. When an output buffer is read, the corresponding OBxE bit is set. The OBxE flag bit is set when all the buffers are empty. If any buffer is already empty, OBxE = 1, the next read to that buffer will generate an OBUF event.

FIGURE 11-7: PARALLEL SLAVE PORT READ WAVEFORMS

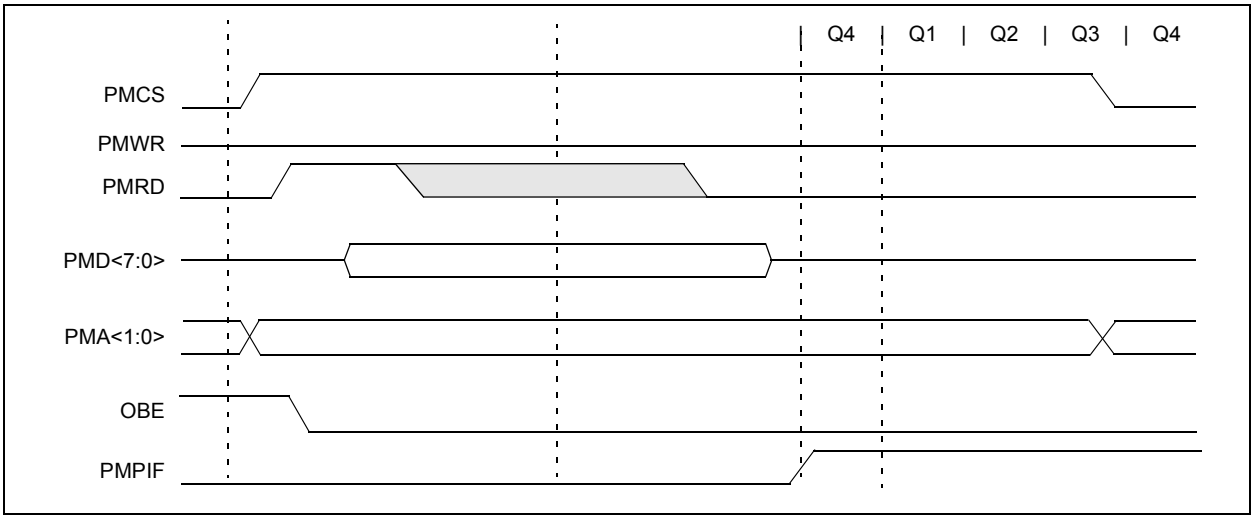

11.2.5.2 WRITE TO SLAVE PORT

When chip select is active and a write strobe occurs (PMCS = 1 and PMWR = 1), the data from PMD<7:0> is captured into one of the four input buffer bytes. Which byte is written depends on the 2-bit address placed on ADDRL<1:0>.

Table 11-1 provides the corresponding input registers and their associated address.

When an input buffer is written, the corresponding IBxF bit is set. The IBF flag bit is set when all the buffers are written. If any buffer is already written (IBxF = 1), the next write strobe to that buffer will generate an OBUF event and the byte will be discarded.

FIGURE 11-8: PARALLEL SLAVE PORT WRITE WAVEFORMS

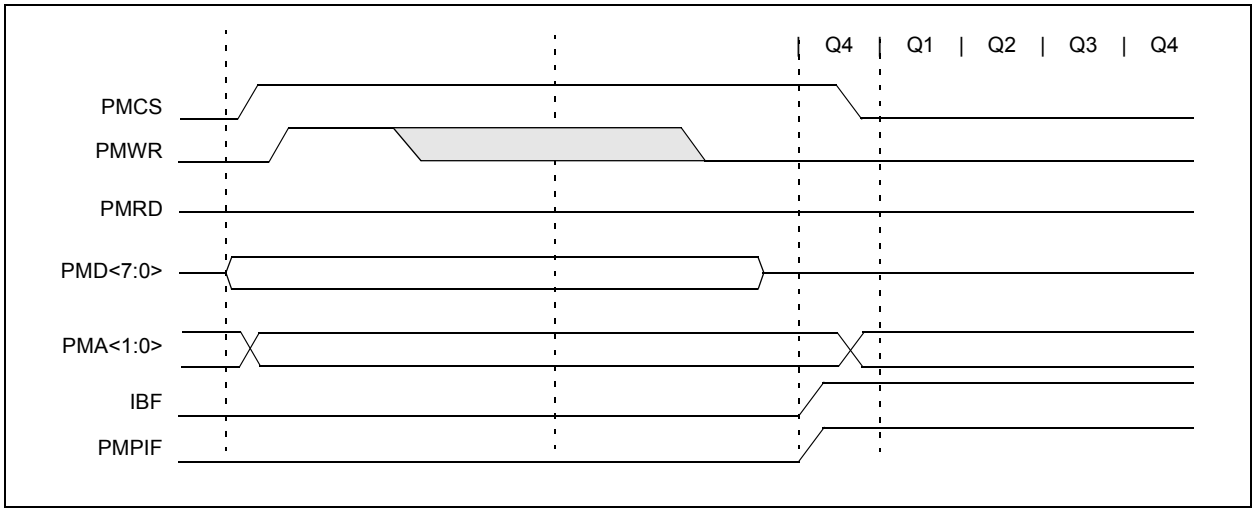

© 2011 Microchip Technology Inc.

11.3 MASTER PORT MODES

In its Master modes, the PMP module provides an 8-bit data bus, up to 16 bits of address, and all the necessary control signals to operate a variety of external parallel devices, such as memory devices, peripherals and slave microcontrollers. To use the PMP as a master, the module must be enabled (PMPEN = 1) and the mode must be set to one of the two possible Master modes (PMMODEH<1:0> = 10 or 11).

Because there are a number of parallel devices with a variety of control methods, the PMP module is designed to be extremely flexible to accommodate a range of configurations. Some of these features include:

- 8-Bit and 16-Bit Data modes on an 8-bit data bus
- Configurable address/data multiplexing
- Up to two chip select lines
- Up to 16 selectable address lines
- Address auto-increment and auto-decrement
- Selectable polarity on all control lines
- Configurable Wait states at different stages of the read/write cycle

11.3.1 PMP AND I/O PIN CONTROL

Multiple control bits are used to configure the presence or absence of control and address signals in the module. These bits are PTBEEN, PTWREN, PTRDEN and PTEN<15:0>. They give the user the ability to conserve pins for other functions and allow flexibility to control the external address. When any one of these bits is set, the associated function is present on its associated pin; when clear, the associated pin reverts to its defined I/O port function.

Setting a PTENx bit will enable the associated pin as an address pin and drive the corresponding data contained in the PMADDR register. Clearing a PTENx bit will force the pin to revert to its original I/O function.

For the pin configured as chip select (PMCS) with the corresponding PTENx bit set, the PTEN0 and PTEN1 bits will also control the PMALL and PMALH signals. When multiplexing is used, the associated address latch signals should be enabled.

11.3.2 READ/WRITE CONTROL

The PMP module supports two distinct read/write signaling methods. In Master Mode 1, read and write strobes are combined into a single control line, PMRD/PMWR. A second control line, PMENB, determines when a read or write action is to be taken. In Master Mode 2, separate read and write strobes (PMRD and PMWR) are supplied on separate pins.

All control signals (PMRD, PMWR, PMBE, PMENB, PMAL and PMCS) can be individually configured as either positive or negative polarity. Configuration is controlled by separate bits in the PMCONL register. Note that the polarity of control signals that share the same output pin (for example, PMWR and PMENB) are controlled by the same bit; the configuration depends on which Master Port mode is being used.

11.3.3 DATA WIDTH

The PMP supports data widths of both 8 bits and 16 bits. The data width is selected by the MODE16 bit (PMMODEH<2>). Because the data path into and out of the module is only 8 bits wide, 16-bit operations are always handled in a multiplexed fashion, with the Least Significant Byte (LSB) of data being presented first. To differentiate data bytes, the byte enable control strobe, PMBE, is used to signal when the Most Significant Byte (MSB) of data is being presented on the data lines.

11.3.4 ADDRESS MULTIPLEXING

In either of the Master modes (PMMODEH<1:0> = 1x), the user can configure the address bus to be multiplexed together with the data bus. This is accomplished by using the ADRMUX<1:0> bits (PMCONH<4:3>). There are three Address Multiplexing modes available. Typical pinout configurations for these modes are displayed in Figure 11-9, Figure 11-10 and Figure 11-11.

In Demultiplexed mode (PMCONH<4:3> = 00), data and address information are completely separated. Data bits are presented on PMD<7:0>, and address bits are presented on PMADDRH<6:0> and PMADDRL<7:0>.

In Partially Multiplexed mode (PMCONH<4:3> = 01), the lower eight bits of the address are multiplexed with the data pins on PMD<7:0>. The upper eight bits of address are unaffected and are presented on PMADDRH<6:0>. The PMA0 pin is used as an address latch and presents the Address Latch Low (PMALL) enable strobe. The read and write sequences are extended by a complete CPU cycle, during which, the address is presented on the PMD<7:0> pins.

In Fully Multiplexed mode (PMCONH<4:3> = 10), the entire 16 bits of the address are multiplexed with the data pins on PMD<7:0>. The PMA0 and PMA1 pins are used to present Address Latch Low (PMALL) enable strobes and Address Latch High (PMALH) enable strobes, respectively. The read and write sequences are extended by two complete CPU cycles. During the first cycle, the lower eight bits of the address are presented on the PMD<7:0> pins with the PMALL strobe active. During the second cycle, the upper eight bits of the address are presented on the PMD<7:0> pins with the PMALH strobe active. In the event the upper address bits are configured as chip select pins, the corresponding address bits are automatically forced to '0'.

© 2011 Microchip Technology Inc.

FIGURE 11-9: DEMULTIPLEXED ADDRESSING MODE (SEPARATE READ AND WRITE STROBES WITH CHIP SELECT)

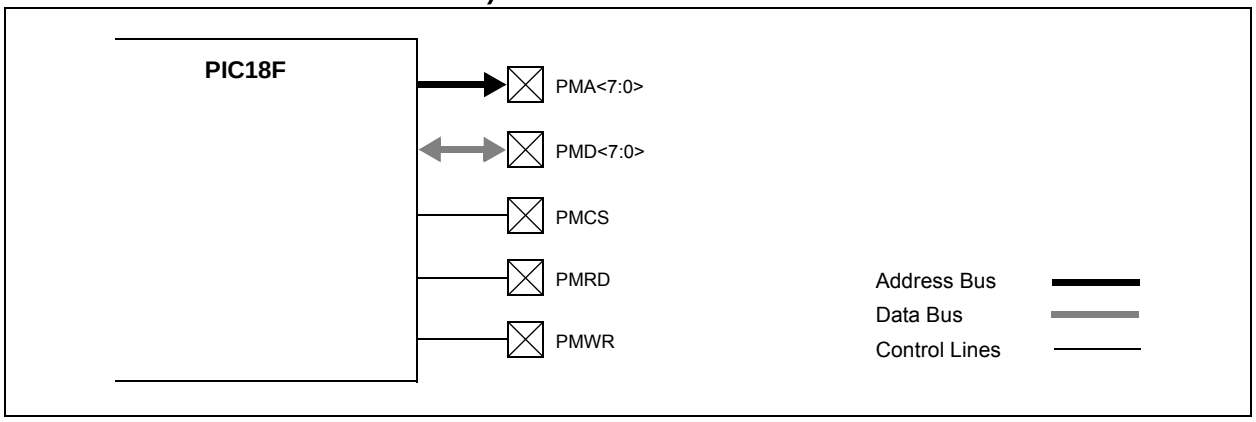

FIGURE 11-10: PARTIALLY MULTIPLEXED ADDRESSING MODE (SEPARATE READ AND WRITE STROBES WITH CHIP SELECT)

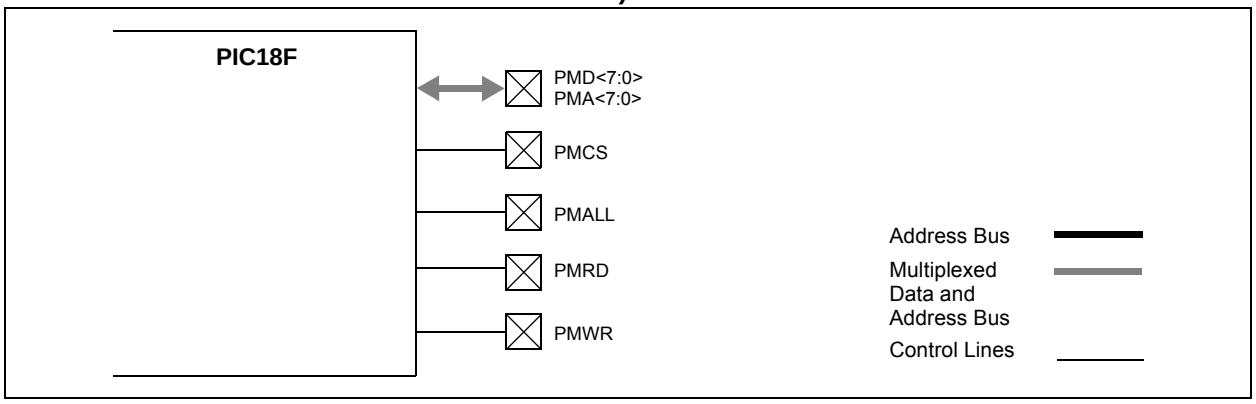

FIGURE 11-11: FULLY MULTIPLEXED ADDRESSING MODE (SEPARATE READ AND WRITE STROBES WITH CHIP SELECT)

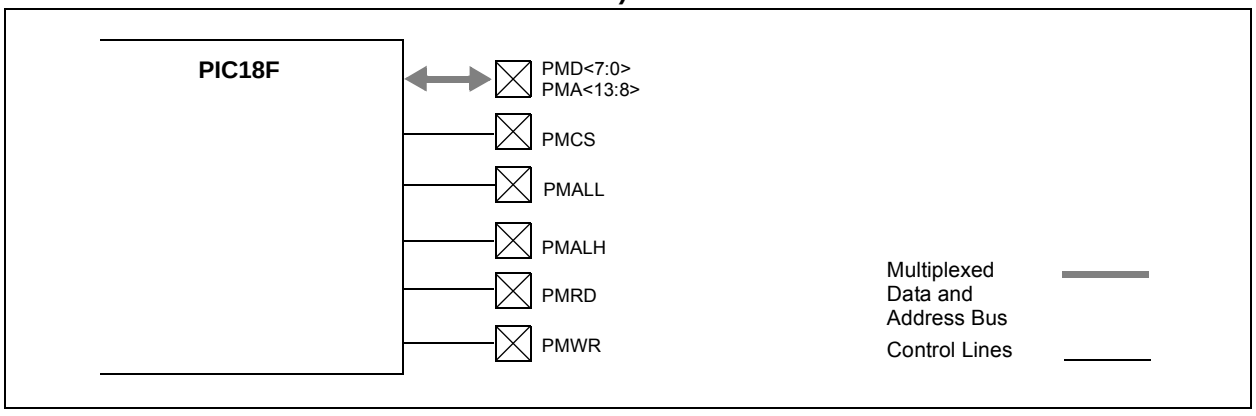

© 2011 Microchip Technology Inc.

11.3.5 CHIP SELECT FEATURES

One chip select line, PMCS, is available for the Master modes of the PMP. The chip select line is controlled by the second Most Significant bit (MSb) of the address bus (PMADDRH<6>). When configured for chip select, the PMADDRH<7:6> bits are not included in any address auto-increment/decrement. The function of the chip select signal is configured using the chip select function bits (PMCONL<7:6>).

11.3.6 AUTO-INCREMENT/DECREMENT

While the module is operating in one of the Master modes, the INCMx bits (PMMODEH<4:3>) control the behavior of the address value. The address can be made to automatically increment or decrement after each read and write operation. The address increments once each operation is completed and the BUSY bit goes to '0'. If the chip select signals are disabled and configured as address bits, the bits will participate in the increment and decrement operations; otherwise, the CS1 bit values will be unaffected.

11.3.7 WAIT STATES

In Master mode, the user has control over the duration of the read, write and address cycles by configuring the module Wait states. Three portions of the cycle, the beginning, middle and end, are configured using the corresponding WAITBx, WAITMx and WAITEx bits in the PMMODEL register.

The WAITBx bits (PMMODEL<7:6>) set the number of Wait cycles for the data setup prior to the PMRD/PMWT strobe in Mode 10, or prior to the PMENB strobe in Mode 11. The WAITMx bits (PMMODEL<5:2>) set the number of Wait cycles for the PMRD/PMWT strobe in Mode 10, or for the PMENB strobe in Mode 11. When this Wait state setting is '0', then WAITB and WAITE have no effect. The WAITE bits (PMMODEL<1:0>) define the number of Wait cycles for the data hold time after the PMRD/PMWT strobe in Mode 10, or after the PMENB strobe in Mode 11.

11.3.8 READ OPERATION

To perform a read on the PMP, the user reads the PMDIN1L register. This causes the PMP to output the desired values on the chip select lines and the address bus. Then the read line (PMRD) is strobed. The read data is placed into the PMDIN1L register.

If the 16-bit mode is enabled (MODE16 = 1), the read of the low byte of the PMDIN1L register will initiate two bus reads. The first read data byte is placed into the PMDIN1L register and the second read data is placed into the PMDIN1H.

Note that the read data obtained from the PMDIN1L register is actually the read value from the previous read operation. Hence, the first user read will be a dummy read to initiate the first bus read and fill the Read register. Also, the requested read value will not be ready until after the BUSY bit is observed low. Thus, in a back-to-back read operation, the data read from the register will be the same for both reads. The next read of the register will yield the new value.

11.3.9 WRITE OPERATION

To perform a write onto the parallel bus, the user writes to the PMDIN1L register. This causes the module to first output the desired values on the chip select lines and the address bus. The write data from the PMDIN1L register is placed onto the PMD<7:0> data bus. Then, the write line (PMWR) is strobed. If the 16-bit mode is enabled (MODE16 = 1), the write to the PMDIN1L register will initiate two bus writes. The first write will consist of the data contained in PMDIN1L and the second write will contain the PMDIN1H.

11.3.10 PARALLEL MASTER PORT STATUS

11.3.10.1 The BUSY Bit

In addition to the PMP interrupt, a BUSY bit is provided to indicate the status of the module. This bit is used only in Master mode. While any read or write operation is in progress, the BUSY bit is set for all but the very last CPU cycle of the operation. In effect, if a single-cycle read or write operation is requested, the BUSY bit will never be active. This allows back-to-back transfers. While the bit is set, any request by the user to initiate a new operation will be ignored (i.e., writing or reading the lower byte of the PMDIN1L register will neither initiate a read nor a write).

11.3.10.2 Interrupts

When the PMP module interrupt is enabled for Master mode, the module will interrupt on every completed read or write cycle; otherwise, the BUSY bit is available to query the status of the module.

11.3.11 MASTER MODE TIMING

This section contains a number of timing examples that represent the common Master mode configuration options. These options vary from 8-bit to 16-bit data, fully demultiplexed to fully multiplexed address and Wait states.

FIGURE 11-12: READ AND WRITE TIMING, 8-BIT DATA, DEMULTIPLEXED ADDRESS

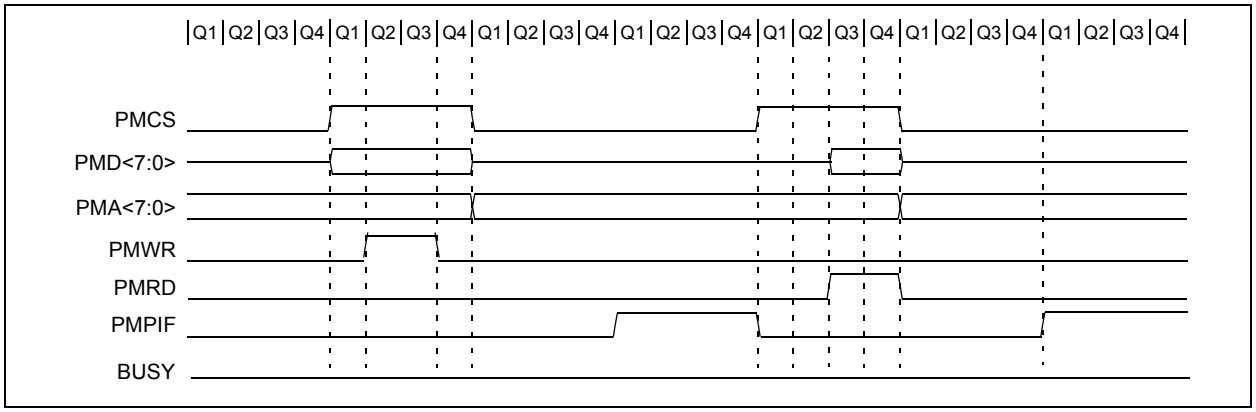

FIGURE 11-13: READ TIMING, 8-BIT DATA, PARTIALLY MULTIPLEXED ADDRESS

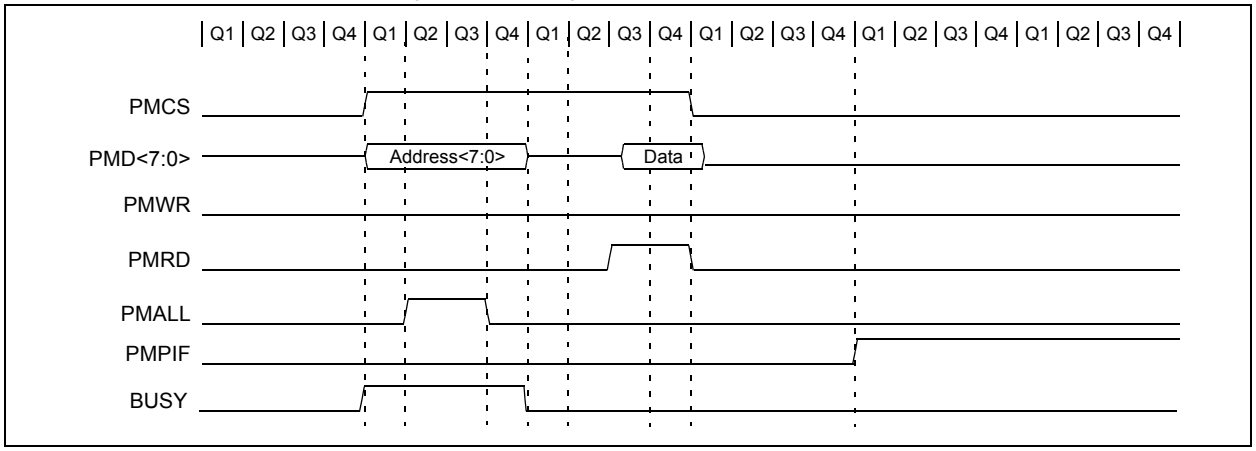

FIGURE 11-14: READ TIMING, 8-BIT DATA, WAIT STATES ENABLED, PARTIALLY MULTIPLEXED ADDRESS

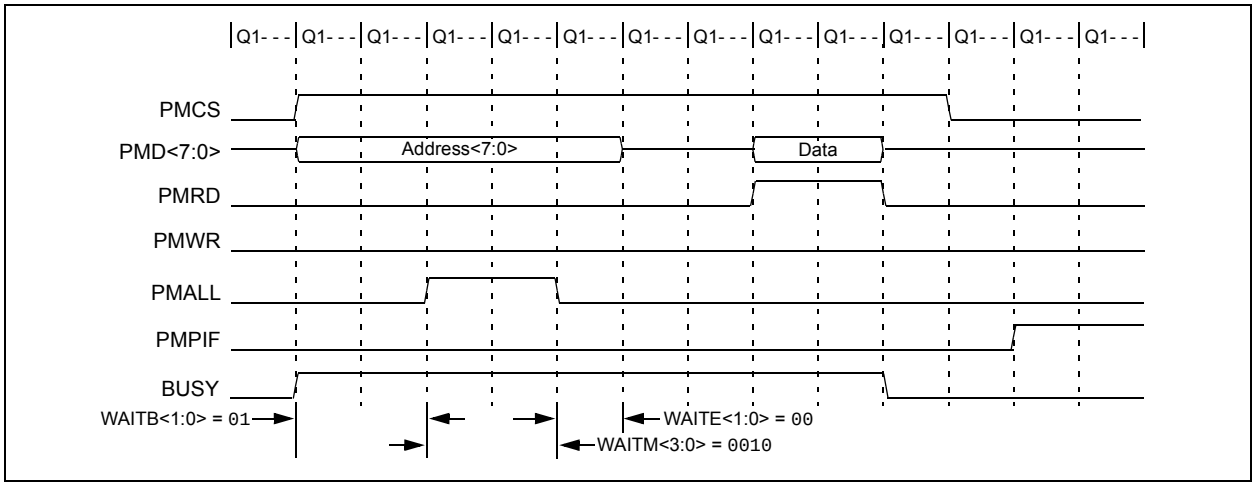

© 2011 Microchip Technology Inc.

FIGURE 11-15: WRITE TIMING, 8-BIT DATA, PARTIALLY MULTIPLEXED ADDRESS

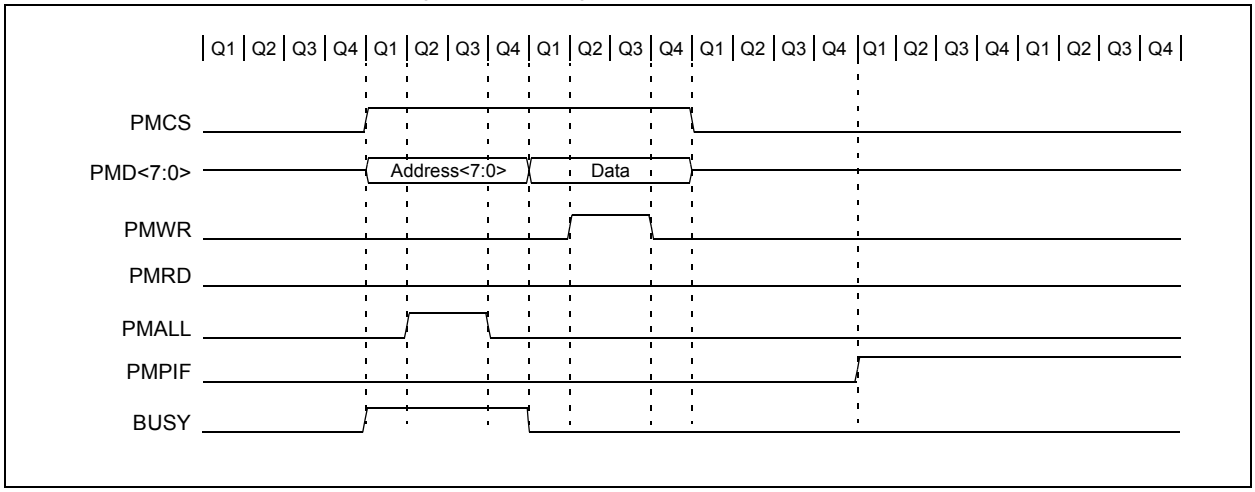

FIGURE 11-16: WRITE TIMING, 8-BIT DATA, WAIT STATES ENABLED, PARTIALLY MULTIPLEXED ADDRESS

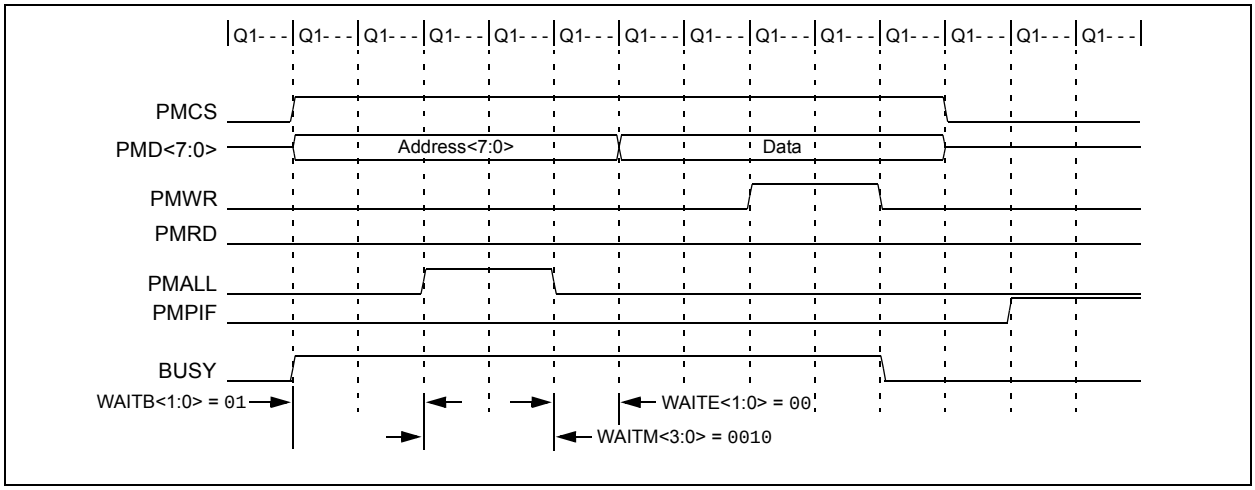

FIGURE 11-17: READ TIMING, 8-BIT DATA, PARTIALLY MULTIPLEXED ADDRESS, ENABLE STROBE

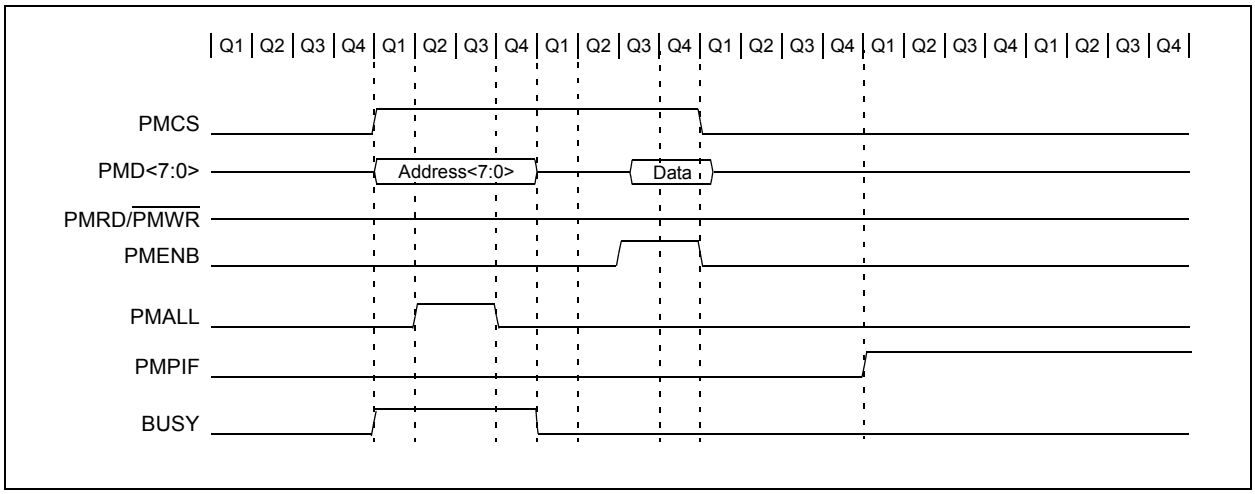

FIGURE 11-18: WRITE TIMING, 8-BIT DATA, PARTIALLY MULTIPLEXED ADDRESS, ENABLE STROBE

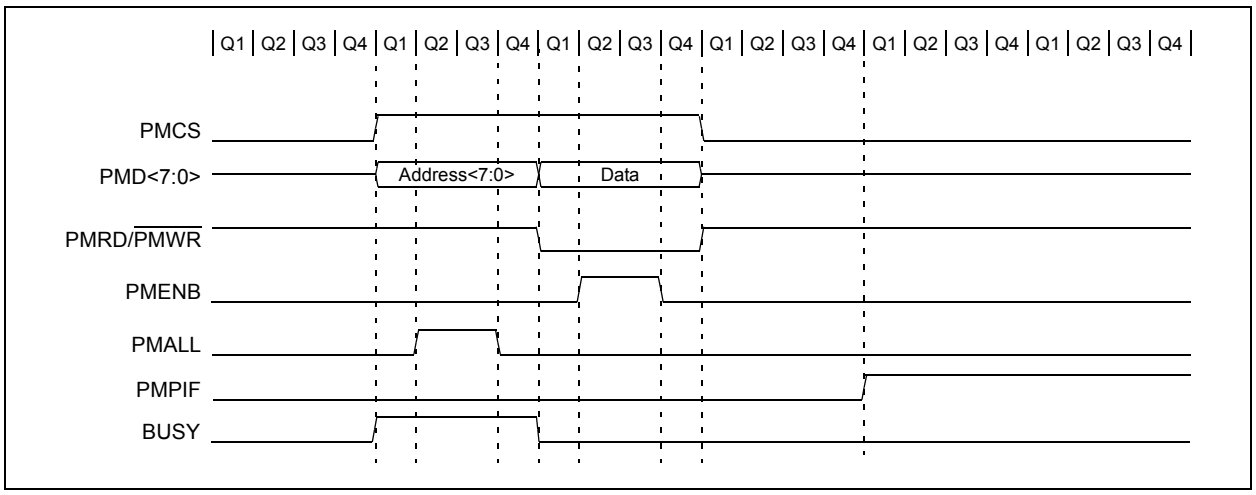

FIGURE 11-19: READ TIMING, 8-BIT DATA, FULLY MULTIPLEXED 16-BIT ADDRESS

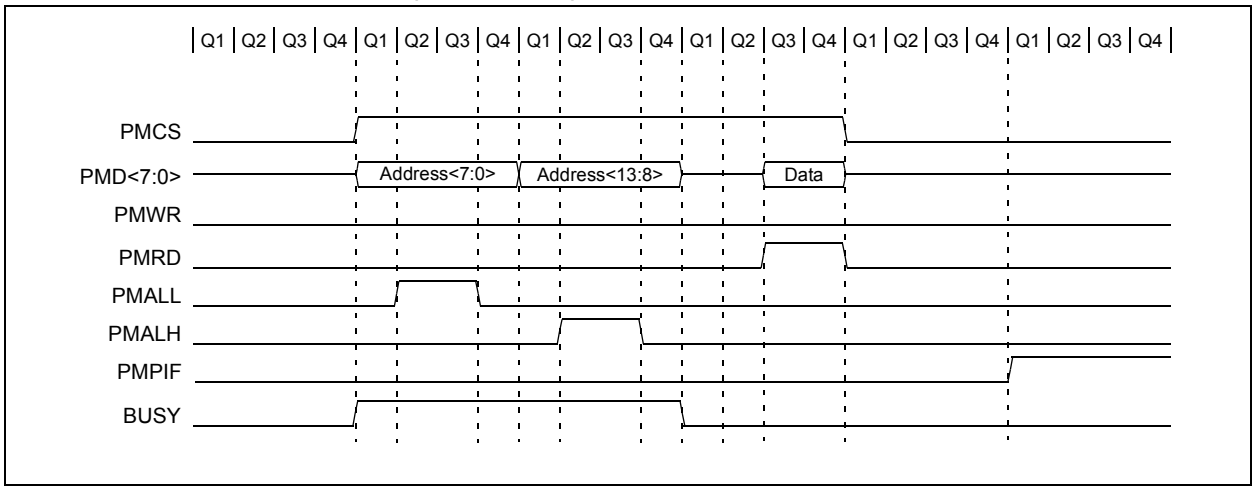

FIGURE 11-20: WRITE TIMING, 8-BIT DATA, FULLY MULTIPLEXED 16-BIT ADDRESS

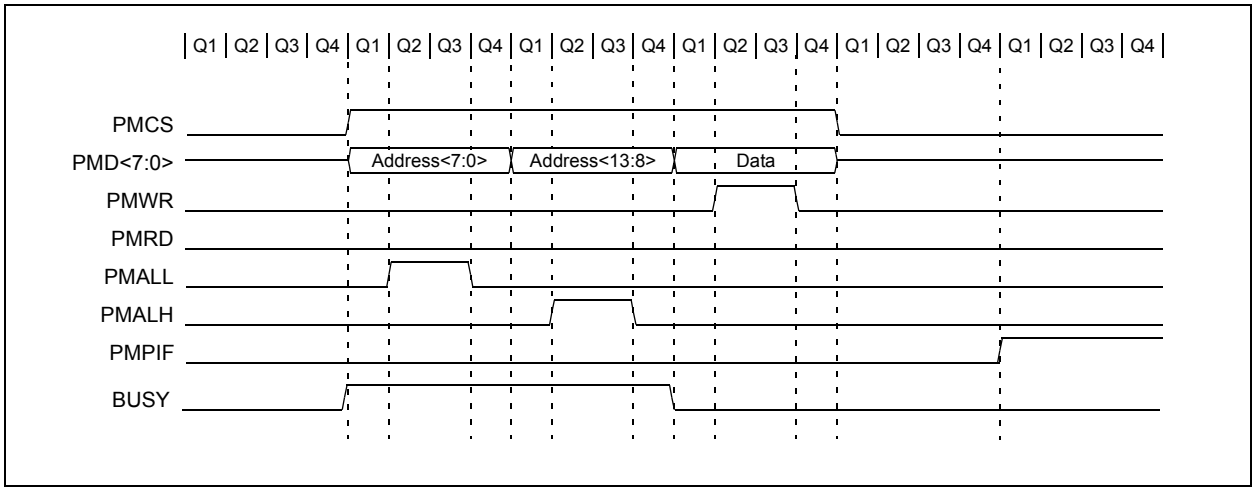

© 2011 Microchip Technology Inc.

FIGURE 11-21: READ TIMING, 16-BIT DATA, DEMULTIPLEXED ADDRESS

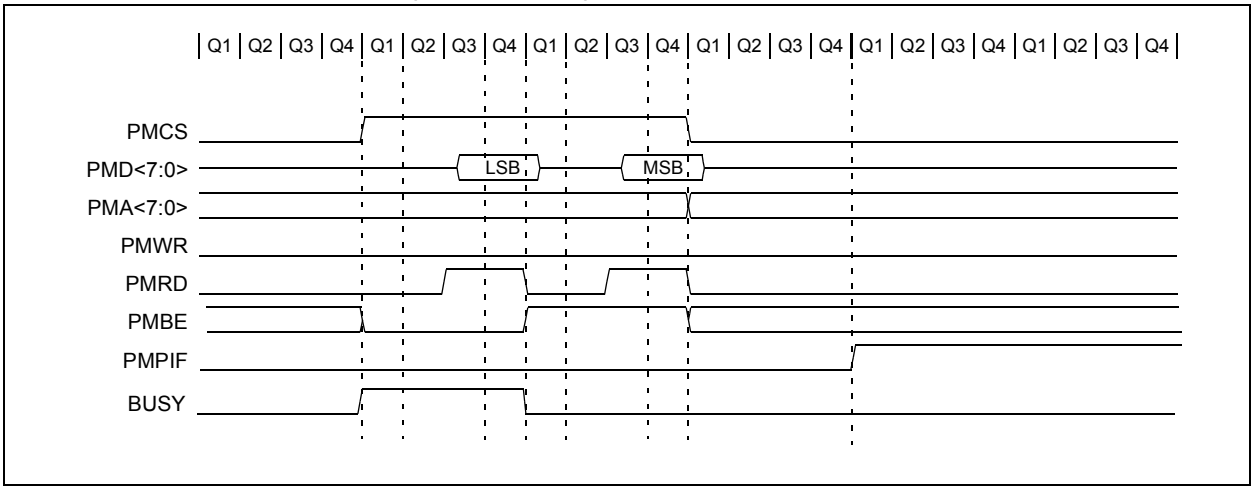

FIGURE 11-22: WRITE TIMING, 16-BIT DATA, DEMULTIPLEXED ADDRESS

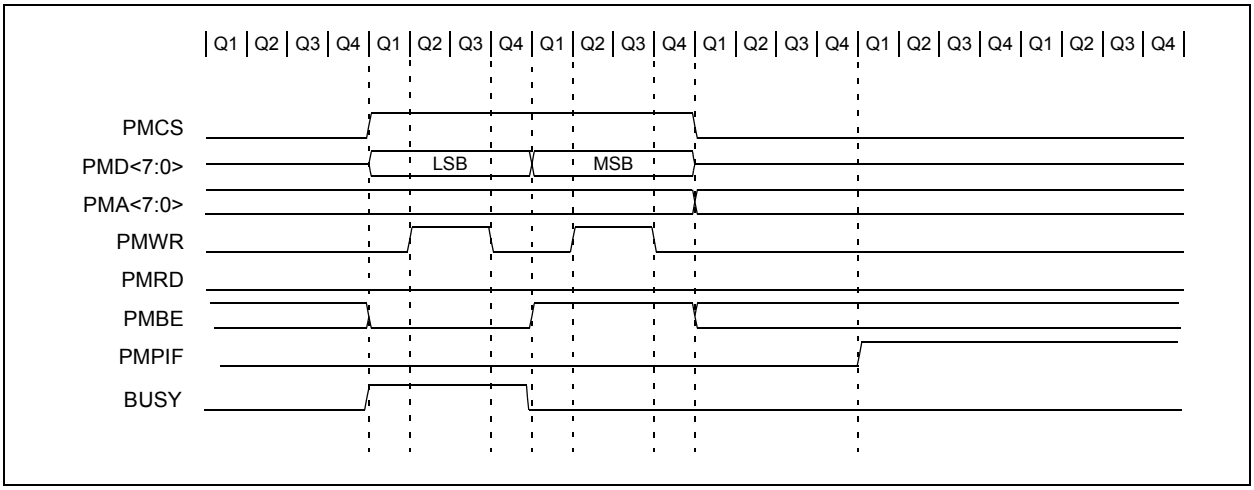

FIGURE 11-23: READ TIMING, 16-BIT MULTIPLEXED DATA, PARTIALLY MULTIPLEXED ADDRESS

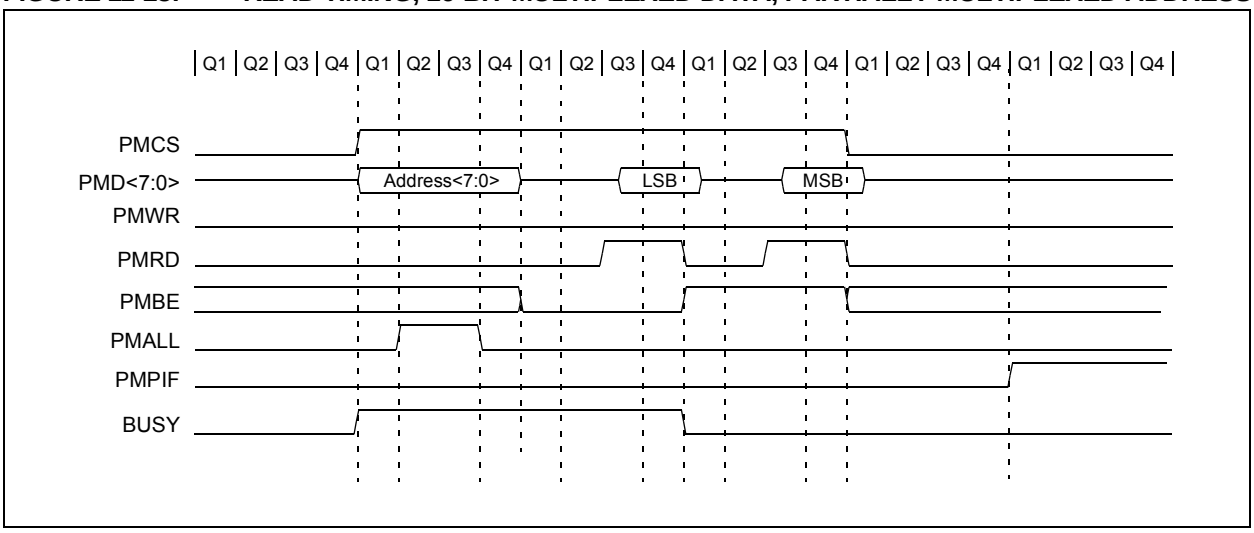

FIGURE 11-24: WRITE TIMING, 16-BIT MULTIPLEXED DATA, PARTIALLY MULTIPLEXED ADDRESS

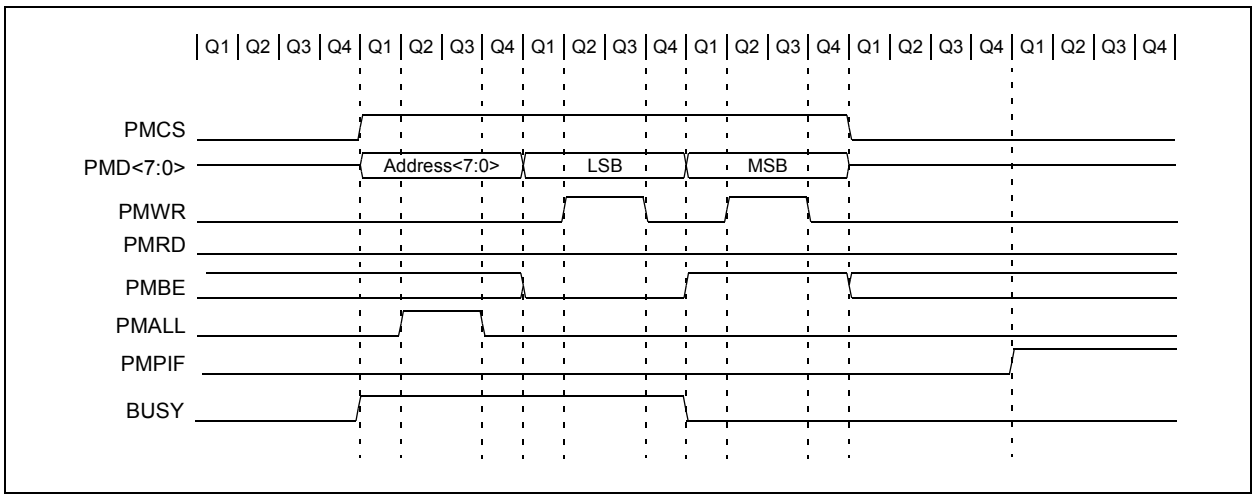

FIGURE 11-25: READ TIMING, 16-BIT MULTIPLEXED DATA, FULLY MULTIPLEXED 16-BIT ADDRESS

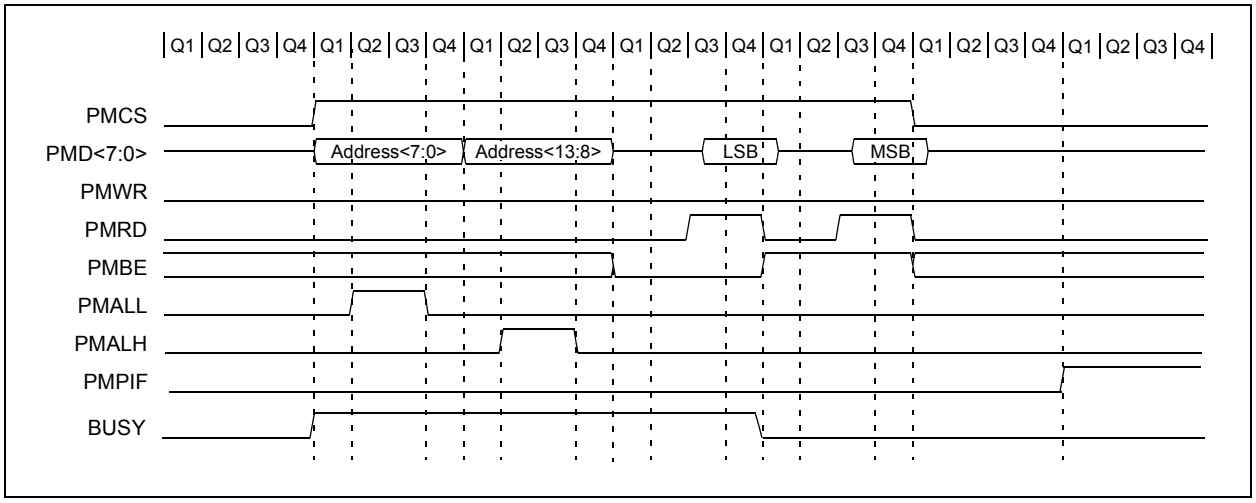

FIGURE 11-26: WRITE TIMING, 16-BIT MULTIPLEXED DATA, FULLY MULTIPLEXED 16-BIT ADDRESS

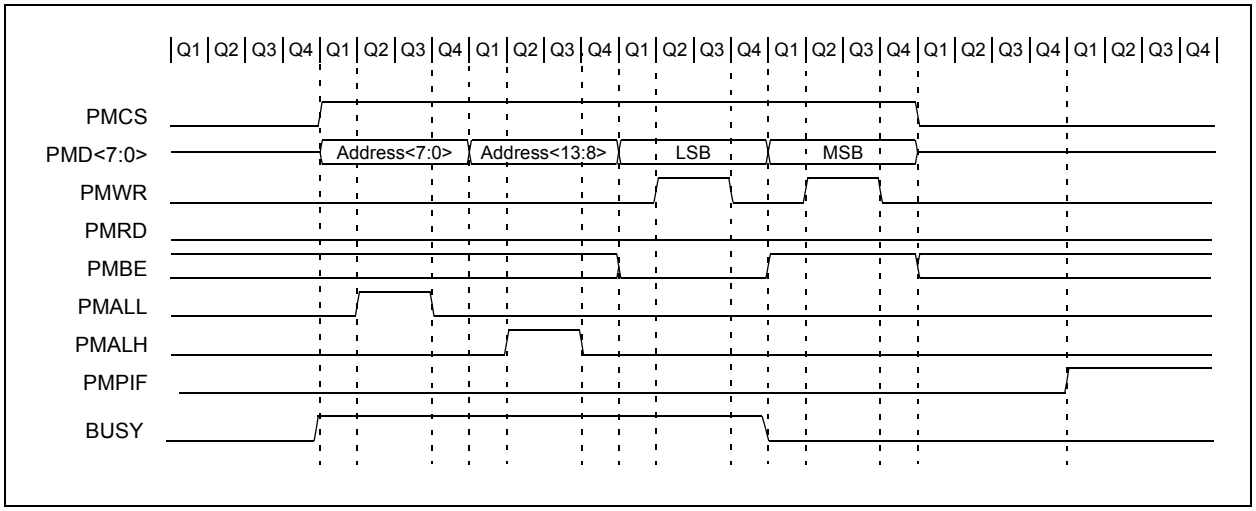

© 2011 Microchip Technology Inc.

11.4 Application Examples

This section introduces some potential applications for the PMP module.

11.4.1 MULTIPLEXED MEMORY OR PERIPHERAL

Figure 11-27 demonstrates the hookup of a memory or another addressable peripheral in Full Multiplex mode. Consequently, this mode achieves the best pin saving from the microcontroller perspective. However, for this configuration, there needs to be some external latches to maintain the address.

FIGURE 11-27: MULTIPLEXED ADDRESSING APPLICATION EXAMPLE

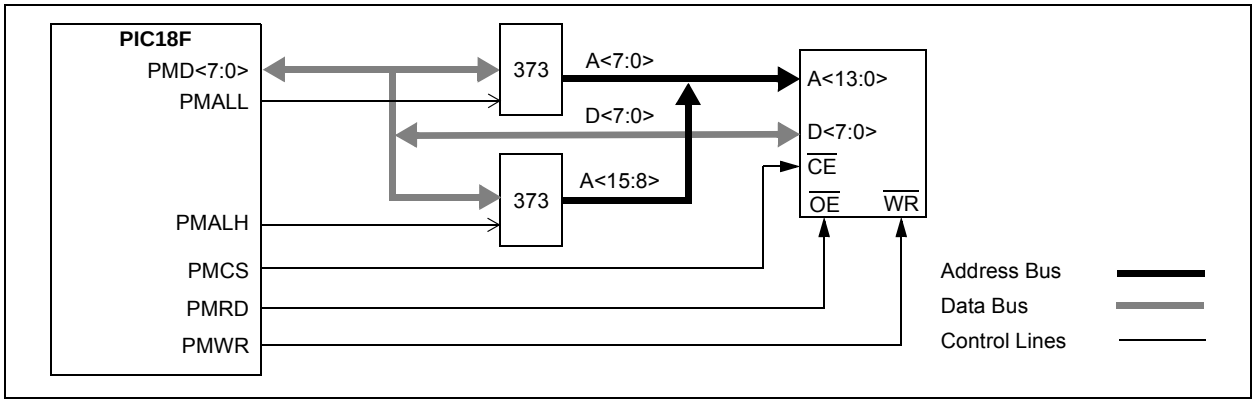

11.4.2 PARTIALLY MULTIPLEXED MEMORY OR PERIPHERAL

Partial multiplexing implies using more pins; however, for a few extra pins, some extra performance can be achieved. Figure 11-28 provides an example of a memory or peripheral that is partially multiplexed with an external latch. If the peripheral has internal latches, as displayed in Figure 11-29, then no extra circuitry is required except for the peripheral itself.

FIGURE 11-28: EXAMPLE OF A PARTIALLY MULTIPLEXED ADDRESSING APPLICATION

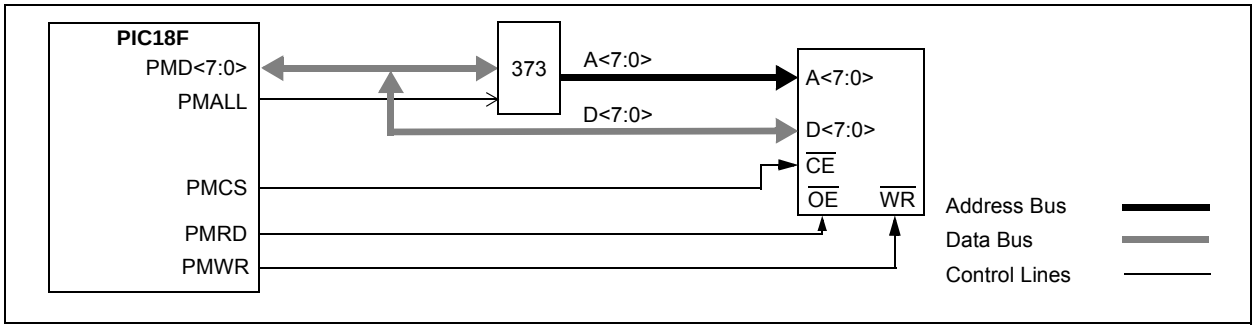

FIGURE 11-29: EXAMPLE OF AN 8-BIT MULTIPLEXED ADDRESS AND DATA APPLICATION

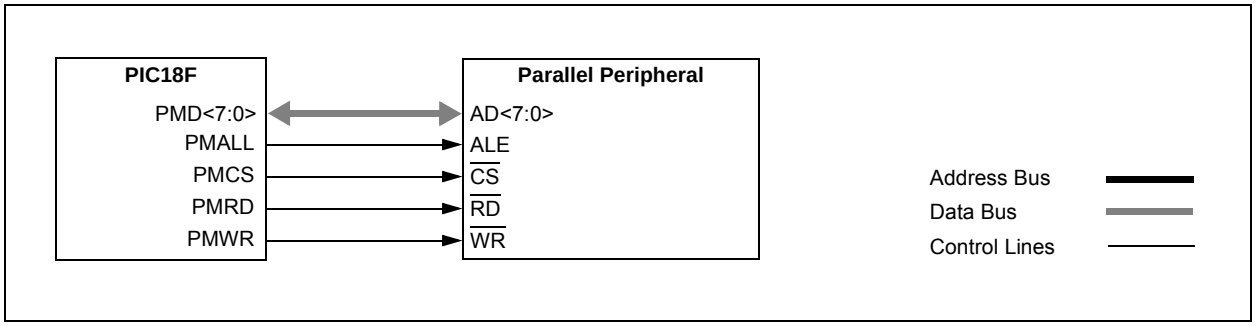

11.4.3 PARALLEL EEPROM EXAMPLE

Figure 11-30 provides an example connecting parallel EEPROM to the PMP. Figure 11-31 demonstrates a slight variation to this, configuring the connection for 16-bit data from a single EEPROM.

FIGURE 11-30: PARALLEL EEPROM EXAMPLE (UP TO 15-BIT ADDRESS, 8-BIT DATA)

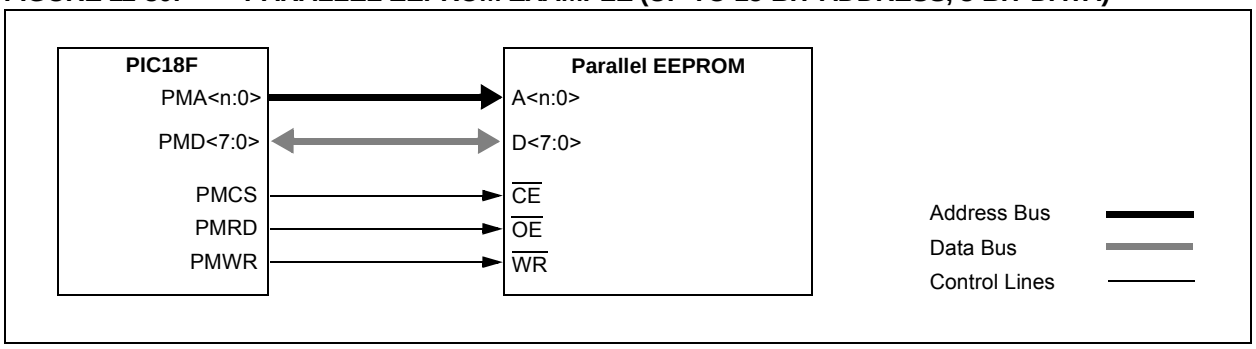

FIGURE 11-31: PARALLEL EEPROM EXAMPLE (UP TO 15-BIT ADDRESS, 16-BIT DATA)

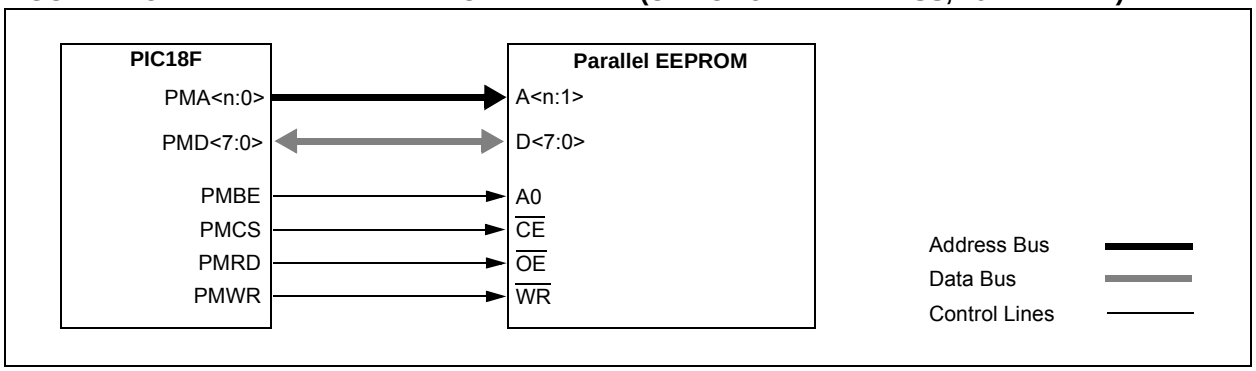

11.4.4 LCD CONTROLLER EXAMPLE

The PMP module can be configured to connect to a typical LCD controller interface, as displayed in Figure 11-32. In this case the PMP module is configured for active-high control signals, since common LCD displays require active-high control.

FIGURE 11-32: LCD CONTROL EXAMPLE (BYTE MODE OPERATION)

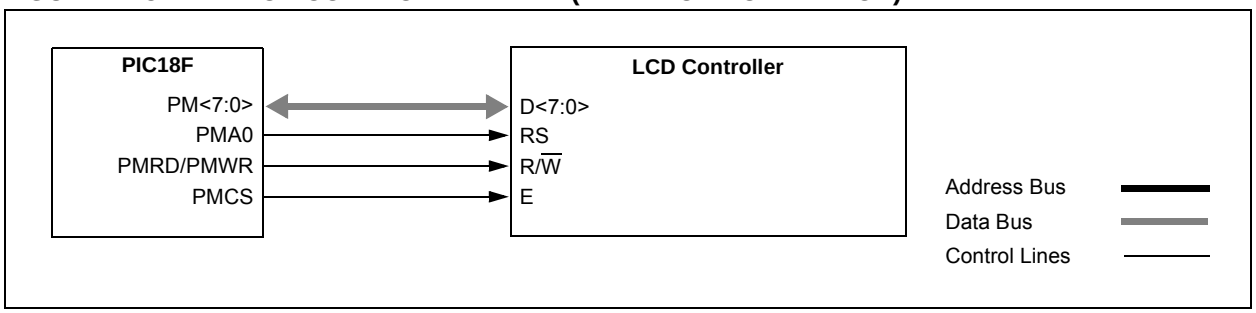

© 2011 Microchip Technology Inc.

TABLE 11-2: REGISTERS ASSOCIATED WITH PMP MODULE

Name	Bit 7	Bit 6	Bit 5	Bit 4	Bit 3	Bit 2	Bit 1	Bit 0	Reset Values on Page:
INTCON	GIE/GIEH	PEIE/GIEL	TMR0IE	INT0IE	RBIE	TMR0IF	INT0IF	RBIF	69
PIR1	PMPIF(2)	ADIF	RC1IF	TX1IF	SSP1IF	CCP1IF	TMR2IF	TMR1IF	72
PIE1	PMPIE(2)	ADIE	RC1IE	TX1IE	SSP1IE	CCP1IE	TMR2IE	TMR1IE	72
IPR1	PMPIP(2)	ADIP	RC1IP	TX1IP	SSP1IP	CCP1IP	TMR2IP	TMR1IP	72
PMCONH(2)	PMPEN	—	—	ADRMUX1	ADRMUX0	PTBEEN	PTWREN	PTRDEN	74
PMCONL(2)	CSF1	CSF0	ALP	—	CS1P	BEP	WRSP	RDSP	74
PMADDRH(1,2)/	—	CS1	Parallel Master Port Address High Byte						73
PMDOUT1H(1,2)	Parallel Port Out Data High Byte (Buffer 1)								73
PMADDRL(1,2)/	Parallel Master Port Address Low Byte								73
PMDOUT1L(1,2)	Parallel Port Out Data Low Byte (Buffer 0)								73
PMDOUT2H(2)	Parallel Port Out Data High Byte (Buffer 3)								74
PMDOUT2L(2)	Parallel Port Out Data Low Byte (Buffer 2)								74
PMDIN1H(2)	Parallel Port In Data High Byte (Buffer 1)								73
PMDIN1L(2)	Parallel Port In Data Low Byte (Buffer 0)								73
PMDIN2H(2)	Parallel Port In Data High Byte (Buffer 3)								74
PMDIN2L(2)	Parallel Port In Data Low Byte (Buffer 2)								74
PMMODEH(2)	BUSY	IRQM1	IRQM0	INCM1	INCM0	MODE16	MODE1	MODE0	74
PMMODEL(2)	WAITB1	WAITB0	WAITM3	WAITM2	WAITM1	WAITM0	WAITE1	WAITE0	74
PMEH(2)	—	PTEN14	—	—	—	—	—	—	74
PMEL(2)	PTEN7	PTEN6	PTEN5	PTEN4	PTEN3	PTEN2	PTEN1	PTEN0	74
PMSTATH(2)	IBF	IBOV	—	—	IB3F	IB2F	IB1F	IB0F	74
PMSTATL(2)	OBE	OBUF	—	—	OB3E	OB2E	OB1E	OB0E	74
PADCFG1	—	—	—	—	—	RTSECSEL1	RTSECSEL0	PMPTTL	74

Legend: — = unimplemented, read as '0'. Shaded cells are not used during PMP operation.

Note 1: The PMADDRH/PMDOUT1H and PMADDRL/PMDOUT1L register pairs share the physical registers and addresses, but have different functions, determined by the module's operating mode.

2: These bits and/or registers are only available on 44-pin devices.

NOTES:

© 2011 Microchip Technology Inc.

12.0 TIMER0 MODULE

The Timer0 module incorporates the following features:

- Software-selectable operation as a timer or counter in both 8-bit or 16-bit modes
- Readable and writable registers
- Dedicated 8-bit, software-programmable prescaler
- Selectable clock source (internal or external)
- Edge select for external clock
- Interrupt-on-overflow

The T0CON register (Register 12-1) controls all aspects of the module's operation, including the prescale selection. It is both readable and writable.

Figure 12-1 provides a simplified block diagram of the Timer0 module in 8-bit mode. Figure 12-2 provides a simplified block diagram of the Timer0 module in 16-bit mode.

REGISTER 12-1: T0CON: TIMER0 CONTROL REGISTER (ACCESS FD5h)

R/W-1	R/W-1	R/W-1	R/W-1	R/W-1	R/W-1	R/W-1	R/W-1
TMR0ON	T08BIT	T0CS	T0SE	PSA	T0PS2	T0PS1	T0PS0
bit 7							bit 0

Legend:			
R = Readable bit	W = Writable bit	U = Unimplemented bit, read as '0'	
-n = Value at POR	'1' = Bit is set	'0' = Bit is cleared	x = Bit is unknown

bit 7 **TMR0ON:** Timer0 On/Off Control bit
1 = Enables Timer0
0 = Stops Timer0

bit 6 **T08BIT**: Timer0 8-Bit/16-Bit Control bit
1 = Timer0 is configured as an 8-bit timer/counter
0 = Timer0 is configured as a 16-bit timer/counter

bit 5 **T0CS**: Timer0 Clock Source Select bit
1 = Transition on T0CKI pin input edge (set by T0SE)
0 = Internal clock (FOSC/4)

bit 4 **T0SE**: Timer0 Source Edge Select bit
1 = Increment on high-to-low transition on T0CKI pin
0 = Increment on low-to-high transition on T0CKI pin

bit 3 **PSA**: Timer0 Prescaler Assignment bit
1 = Timer0 prescaler is not assigned. Timer0 clock input bypasses prescaler.
0 = Timer0 prescaler is assigned. Timer0 clock input comes from prescaler output.

bit 2-0 **T0PS<2:0>**: Timer0 Prescaler Select bits
111 = 1:256 Prescale value
110 = 1:128 Prescale value
101 = 1:64 Prescale value
100 = 1:32 Prescale value
011 = 1:16 Prescale value
010 = 1:8 Prescale value
001 = 1:4 Prescale value
000 = 1:2 Prescale value

© 2011 Microchip Technology Inc.

12.1 Timer0 Operation

Timer0 can operate as either a timer or a counter. The mode is selected with the T0CS bit (T0CON<5>). In Timer mode (T0CS = 0), the module increments on every clock by default unless a different prescaler value is selected (see **Section 12.3 "Prescaler"**). If the TMR0 register is written to, the increment is inhibited for the following two instruction cycles. The user can work around this by writing an adjusted value to the TMR0 register.

The Counter mode is selected by setting the T0CS bit (= 1). In this mode, Timer0 increments either on every rising edge or falling edge of pin, T0CKI. The incrementing edge is determined by the Timer0 Source Edge Select bit, T0SE (T0CON<4>); clearing this bit selects the rising edge. Restrictions on the external clock input are discussed below.

An external clock source can be used to drive Timer0; however, it must meet certain requirements to ensure that the external clock can be synchronized with the internal phase clock (TOSC). There is a delay between synchronization and the onset of incrementing the timer/counter.

12.2 Timer0 Reads and Writes in 16-Bit Mode

TMR0H is not the actual high byte of Timer0 in 16-bit mode. It is actually a buffered version of the real high byte of Timer0, which is not directly readable nor writable (refer to Figure 12-2). TMR0H is updated with the contents of the high byte of Timer0 during a read of TMR0L. This provides the ability to read all 16 bits of Timer0 without having to verify that the read of the high and low byte were valid, due to a rollover between successive reads of the high and low byte.

Similarly, a write to the high byte of Timer0 must also take place through the TMR0H Buffer register. The high byte is updated with the contents of TMR0H when a write occurs to TMR0L. This allows all 16 bits of Timer0 to be updated at once.

FIGURE 12-1: TIMER0 BLOCK DIAGRAM (8-BIT MODE)

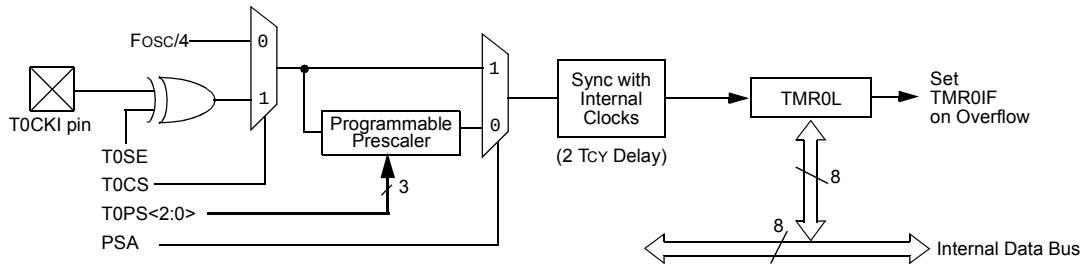

Note: Upon Reset, Timer0 is enabled in 8-bit mode with clock input from T0CKI max. prescale.

FIGURE 12-2: TIMER0 BLOCK DIAGRAM (16-BIT MODE)

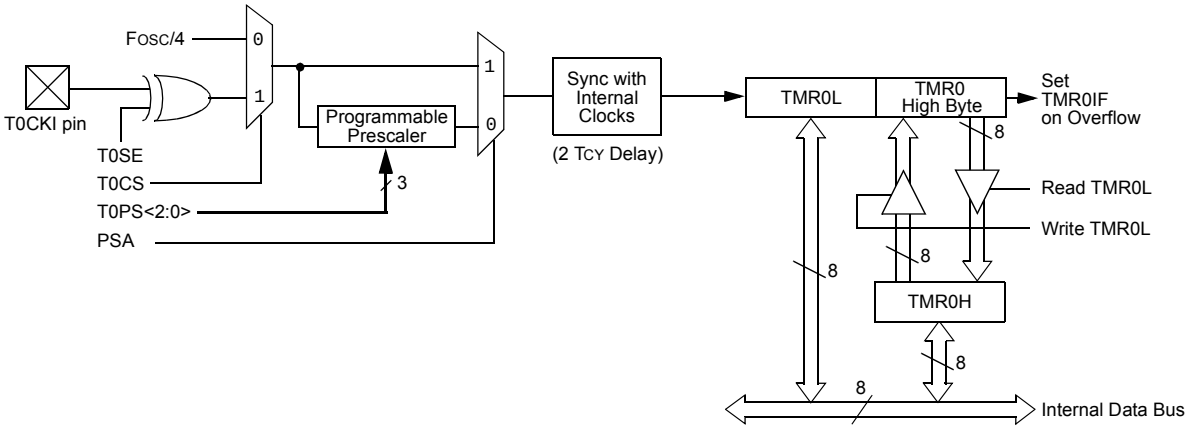

Note: Upon Reset, Timer0 is enabled in 8-bit mode with clock input from T0CKI max. prescale.

© 2011 Microchip Technology Inc.

12.3 Prescaler

An 8-bit counter is available as a prescaler for the Timer0 module. The prescaler is not directly readable or writable. Its value is set by the PSA and T0PS<2:0> bits (T0CON<3:0>), which determine the prescaler assignment and prescale ratio.

Clearing the PSA bit assigns the prescaler to the Timer0 module. When it is assigned, prescale values from 1:2 through 1:256, in power-of-2 increments, are selectable.

When assigned to the Timer0 module, all instructions writing to the TMR0 register (e.g., `CLRF TMR0`, `MOVWF TMR0`, `BSF TMR0`, etc.) clear the prescaler count.

Note:	Writing to TMR0 when the prescaler is assigned to Timer0 will clear the prescaler count but will not change the prescaler assignment.

12.3.1 SWITCHING PRESCALER ASSIGNMENT

The prescaler assignment is fully under software control and can be changed “on-the-fly” during program execution.

12.4 Timer0 Interrupt

The TMR0 interrupt is generated when the TMR0 register overflows from FFh to 00h in 8-bit mode, or from FFFFh to 0000h in 16-bit mode. This overflow sets the TMR0IF flag bit. The interrupt can be masked by clearing the TMR0IE bit (INTCON<5>). Before re-enabling the interrupt, the TMR0IF bit must be cleared in software by the Interrupt Service Routine (ISR).

Since Timer0 is shutdown in Sleep mode, the TMR0 interrupt cannot awaken the processor from Sleep.

TABLE 12-1: REGISTERS ASSOCIATED WITH TIMER0

Name	Bit 7	Bit 6	Bit 5	Bit 4	Bit 3	Bit 2	Bit 1	Bit 0	Reset Values on Page:
TMR0L	Timer0 Register Low Byte								90
TMR0H	Timer0 Register High Byte								90
INTCON	GIE/GIEH	PEIE/GIEL	TMR0IE	INT0IE	RBIE	TMR0IF	INT0IF	RBIF	90
T0CON	TMR0ON	T08BIT	T0CS	T0SE	PSA	T0PS2	T0PS1	T0PS0	90

Legend: — = unimplemented, read as ‘0’. Shaded cells are not used by Timer0.

NOTES:

© 2011 Microchip Technology Inc.

13.0 TIMER1 MODULE

The Timer1 timer/counter module incorporates these features:

- Software-selectable operation as a 16-bit timer or counter
- Readable and writable 8-bit registers (TMR1H and TMR1L)
- Selectable clock source (internal or external) with device clock or Timer1 oscillator internal options
- Interrupt-on-overflow
- Reset on ECCP Special Event Trigger
- Device clock status flag (T1RUN)
- Timer with gated control

Figure 13-1 displays a simplified block diagram of the Timer1 module.

The module incorporates its own low-power oscillator to provide an additional clocking option. The Timer1 oscillator can also be used as a low-power clock source for the microcontroller in power-managed operation.

Timer1 is controlled through the T1CON Control register (Register 13-1). It also contains the Timer1 Oscillator Enable bit (T1OSCEN). Timer1 can be enabled or disabled by setting or clearing control bit, TMR1ON (T1CON<0>).

The FOSC clock source (TMR1CS<1:0> = 01) should not be used with the ECCP capture/compare features. If the timer will be used with the capture or compare features, always select one of the other timer clocking options.

REGISTER 13-1: T1CON: TIMER1 CONTROL REGISTER (ACCESS FCDh)

R/W-0	R/W-0	R/W-0	R/W-0	R/W-0	R/W-0	R/W-0	R/W-0
TMR1CS1	TMR1CS0	T1CKPS1	T1CKPS0	T1OSCEN	$\overline{\text{T1SYNC}}$	RD16	TMR1ON
bit 7							bit 0

Legend:			
R = Readable bit	W = Writable bit	U = Unimplemented bit, read as '0'	
-n = Value at POR	'1' = Bit is set	'0' = Bit is cleared	x = Bit is unknown

bit 7-6 **TMR1CS<1:0>:** Timer1 Clock Source Select bits
10 = Timer1 clock source is the T1OSC or T1CKI pin
01 = Timer1 clock source is the system clock (FOSC)(1)
00 = Timer1 clock source is the instruction clock (FOSC/4)

bit 5-4 **T1CKPS<1:0>:** Timer1 Input Clock Prescale Select bits
11 = 1:8 Prescale value
10 = 1:4 Prescale value
01 = 1:2 Prescale value
00 = 1:1 Prescale value

bit 3 **T1OSCEN:** Timer1 Oscillator Source Select bit
When TMR1CS<1:0> = 10:
1 = Power up the Timer1 crystal driver and supply the Timer1 clock from the crystal output
0 = Timer1 crystal driver is off, Timer1 clock is from the T1CKI input pin(2)
When TMR1CS<1:0> = 0x:
1 = Power up the Timer1 crystal driver
0 = Timer1 crystal driver is off(2)

bit 2 **$\overline{\text{T1SYNC}}$:** Timer1 External Clock Input Synchronization Select bit
TMR1CS<1:0> = 10:
1 = Do not synchronize external clock input
0 = Synchronize external clock input
TMR1CS<1:0> = 0x:
This bit is ignored. Timer1 uses the internal clock when TMR1CS<1:0> = 0x.

Note 1: The FOSC clock source should not be selected if the timer will be used with the ECCP capture/compare features.

2: The Timer1 oscillator crystal driver is powered whenever T1OSCEN (T1CON) or T3OSCEN (T3CON) = 1. The circuit is enabled by the logical OR of these two bits. When disabled, the inverter and feedback resistor are disabled to eliminate power drain. The TMR1ON and TMR3ON bits do not have to be enabled to power up the crystal driver.

© 2011 Microchip Technology Inc.

REGISTER 13-1: T1CON: TIMER1 CONTROL REGISTER (ACCESS FCDh) (CONTINUED)

bit 1 **RD16:** 16-Bit Read/Write Mode Enable bit
1 = Enables register read/write of Timer1 in one 16-bit operation
0 = Enables register read/write of Timer1 in two 8-bit operations

bit 0 **TMR1ON:** Timer1 On bit
1 = Enables Timer1
0 = Stops Timer1

Note 1: The FOSC clock source should not be selected if the timer will be used with the ECCP capture/compare features.

2: The Timer1 oscillator crystal driver is powered whenever T1OSCEN (T1CON) or T3OSCEN (T3CON) = 1. The circuit is enabled by the logical OR of these two bits. When disabled, the inverter and feedback resistor are disabled to eliminate power drain. The TMR1ON and TMR3ON bits do not have to be enabled to power up the crystal driver.

© 2011 Microchip Technology Inc.

13.1 Timer1 Gate Control Register

The Timer1 Gate Control register (T1GCON), displayed in Register 13-2, is used to control the Timer1 gate.

REGISTER 13-2: T1GCON: TIMER1 GATE CONTROL REGISTER (ACCESS F9Ah)(1)

R/W-0	R/W-0	R/W-0	R/W-0	R/W-0	R-x	R/W-0	R/W-0
TMR1GE	T1GPOL	T1GTM	T1GSPM	T1GGO/$\overline{\text{T1DONE}}$	T1GVAL	T1GSS1	T1GSS0
bit 7							bit 0

Legend:			
R = Readable bit	W = Writable bit	U = Unimplemented bit, read as '0'	
-n = Value at POR	'1' = Bit is set	'0' = Bit is cleared	x = Bit is unknown

bit 7 **TMR1GE:** Timer1 Gate Enable bit
If TMR1ON = 0:
This bit is ignored.
If TMR1ON = 1:
1 = Timer1 counting is controlled by the Timer1 gate function
0 = Timer1 counts regardless of the Timer1 gate function

bit 6 **T1GPOL:** Timer1 Gate Polarity bit
1 = Timer1 gate is active-high (Timer1 counts when gate is high)
0 = Timer1 gate is active-low (Timer1 counts when gate is low)

bit 5 **T1GTM:** Timer1 Gate Toggle Mode bit
1 = Timer1 Gate Toggle mode is enabled
0 = Timer1 Gate Toggle mode is disabled and toggle flip-flop is cleared
Timer1 gate flip-flop toggles on every rising edge.

bit 4 **T1GSPM:** Timer1 Gate Single Pulse Mode bit
1 = Timer1 Gate Single Pulse mode is enabled and is controlling Timer1 gate
0 = Timer1 Gate Single Pulse mode is disabled

bit 3 **T1GGO/$\overline{\text{T1DONE}}$:** Timer1 Gate Single Pulse Acquisition Status bit
1 = Timer1 gate single pulse acquisition is ready, waiting for an edge
0 = Timer1 gate single pulse acquisition has completed or has not been started
This bit is automatically cleared when T1GSPM is cleared.

bit 2 **T1GVAL:** Timer1 Gate Current State bit
Indicates the current state of the Timer1 gate that could be provided to TMR1H:TMR1L; unaffected by Timer1 Gate Enable (TMR1GE) bit.

bit 1-0 **T1GSS<1:0>:** Timer1 Gate Source Select bits
00 = Timer1 gate pin
01 = Timer0 overflow output
10 = TMR2 to match PR2 output

Note 1: Programming the T1GCON prior to T1CON is recommended.

REGISTER 13-3: TCLKCON: TIMER CLOCK CONTROL REGISTER (BANKED F52h)

U-0	U-0	U-0	R-0	U-0	U-0	R/W-0	R/W-0
—	—	—	T1RUN	—	—	T3CCP2	T3CCP1
bit 7							bit 0

Legend:			
R = Readable bit	W = Writable bit	U = Unimplemented bit, read as ‘0’	
-n = Value at POR	‘1’ = Bit is set	‘0’ = Bit is cleared	x = Bit is unknown

bit 7-5 **Unimplemented:** Read as ‘0’

bit 4 **T1RUN:** Timer1 Run Status bit
1 = Device is currently clocked by T1OSC/T1CKI
0 = System clock comes from an oscillator other than T1OSC/T1CKI

bit 3-2 **Unimplemented:** Read as ‘0’

bit 1-0 **T3CCP<2:1>:** ECCP Timer Assignment bits
10 = ECCP1 and ECCP2 both use Timer3 (capture/compare) and Timer4 (PWM)
01 = ECCP1 uses Timer1 (compare/capture) and Timer2 (PWM); ECCP2 uses Timer3 (capture/compare) and Timer4 (PWM)
00 = ECCP1 and ECCP2 both use Timer1 (capture/compare) and Timer2 (PWM)

© 2011 Microchip Technology Inc.

13.2 Timer1 Operation

The Timer1 module is an 8-bit or 16-bit incrementing counter, which is accessed through the TMR1H:TMR1L register pair.

When used with an internal clock source, the module is a timer and increments on every instruction cycle. When used with an external clock source, the module can be used as either a timer or counter and increments on every selected edge of the external source.

Timer1 is enabled by configuring the TMR1ON and TMR1GE bits in the T1CON and T1GCON registers, respectively.

When Timer1 is enabled, the RC1/T1OSI/$\overline{\text{UOE}}$/RP12 and RC0/T1OSO/T1CKI/RP11 pins become inputs. This means the values of TRISC<1:0> are ignored and the pins are read as '0'.

13.3 Clock Source Selection

The TMR1CS<1:0> and T1OSCEN bits of the T1CON register are used to select the clock source for Timer1. Register 13-1 displays the clock source selections.

13.3.1 INTERNAL CLOCK SOURCE

When the internal clock source is selected, the TMR1H:TMR1L register pair will increment on multiples of FOSC as determined by the Timer1 prescaler.

13.3.2 EXTERNAL CLOCK SOURCE

When the external clock source is selected, the Timer1 module may work as a timer or a counter.

When enabled to count, Timer1 is incremented on the rising edge of the external clock input, T1CKI, or the capacitive sensing oscillator signal. Either of these external clock sources can be synchronized to the microcontroller system clock or they can run asynchronously.

When used as a timer with a clock oscillator, an external 32.768 kHz crystal can be used in conjunction with the dedicated internal oscillator circuit.

Note: In Counter mode, a falling edge must be registered by the counter prior to the first incrementing rising edge after any one or more of the following conditions:

- Timer1 is enabled after a POR
- Write to TMR1H or TMR1L
- Timer1 is disabled
- Timer1 is disabled (TMR1ON = 0)

when T1CKI is high, then Timer1 is enabled (TMR1ON = 1) when T1CKI is low.

TABLE 13-1: TIMER1 CLOCK SOURCE SELECTION

TMR1CS1	TMR1CS0	T1OSCEN	Clock Source
0	1	x	Clock Source (FOSC)
0	0	x	Instruction Clock (FOSC/4)
1	0	0	External Clock on T1CKI Pin
1	0	1	Oscillator Circuit on T1OSI/T1OSO Pin

FIGURE 13-1: TIMER1 BLOCK DIAGRAM

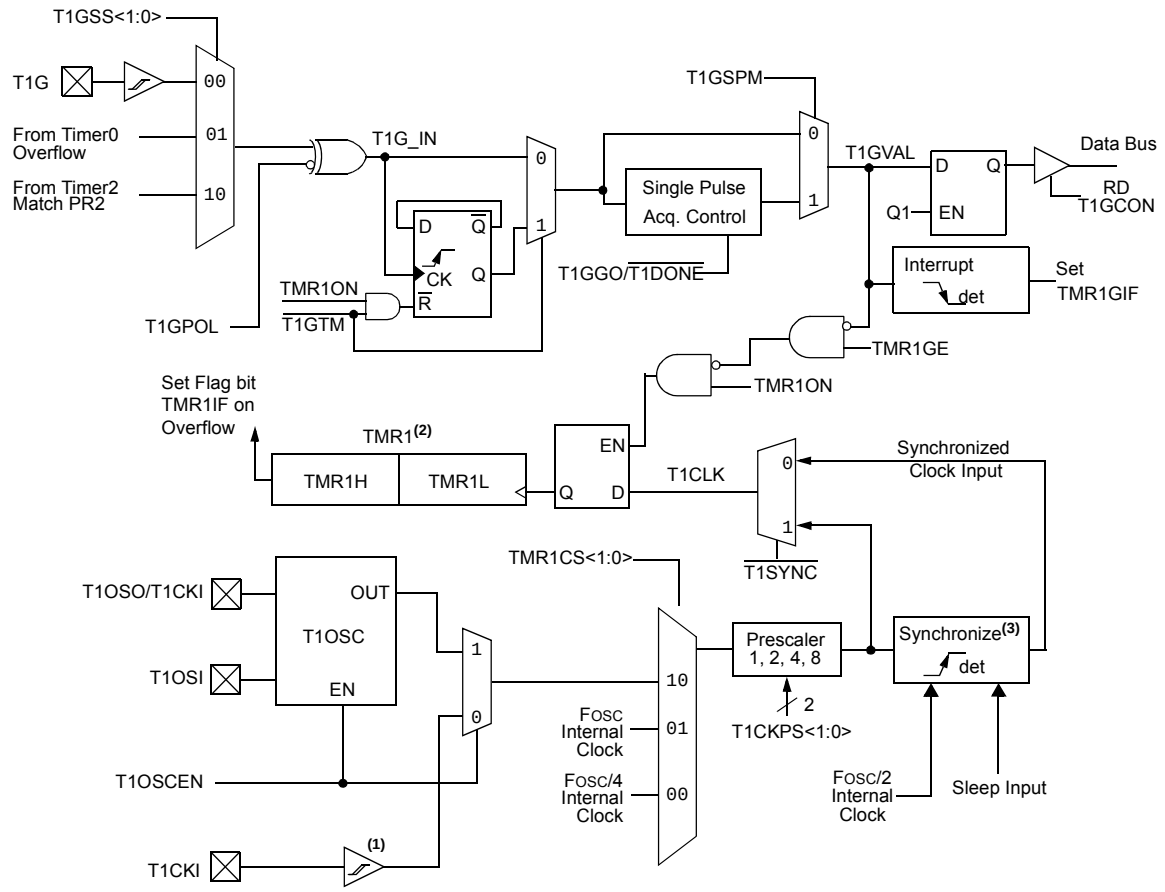

Note 1: ST buffer is a high-speed type when using T1CKI.
2: Timer1 register increments on the rising edge.
3: Synchronization does not operate while in Sleep.

© 2011 Microchip Technology Inc.

13.4 Timer1 16-Bit Read/Write Mode

Timer1 can be configured for 16-bit reads and writes. When the RD16 control bit (T1CON<1>) is set, the address for TMR1H is mapped to a buffer register for the high byte of Timer1. A read from TMR1L loads the contents of the high byte of Timer1 into the Timer1 High Byte Buffer register. This provides the user with the ability to accurately read all 16 bits of Timer1 without having to determine whether a read of the high byte, followed by a read of the low byte, has become invalid due to a rollover between reads.

A write to the high byte of Timer1 must also take place through the TMR1H Buffer register. The Timer1 high byte is updated with the contents of TMR1H when a write occurs to TMR1L. This allows a user to write all 16 bits to both the high and low bytes of Timer1 at once.

The high byte of Timer1 is not directly readable or writable in this mode. All reads and writes must take place through the Timer1 High Byte Buffer register. Writes to TMR1H do not clear the Timer1 prescaler. The prescaler is only cleared on writes to TMR1L.

13.5 Timer1 Oscillator

An on-chip crystal oscillator circuit is incorporated between pins, T1OSI (input) and T1OSO (amplifier output). It is enabled by setting the Timer1 Oscillator Enable bit, T1OSCEN (T1CON<3>). The oscillator is a low-power circuit rated for 32 kHz crystals. It will continue to run during all power-managed modes. The circuit for a typical LP oscillator is depicted in Figure 13-2. Table 13-2 provides the capacitor selection for the Timer1 oscillator.

The user must provide a software time delay to ensure proper start-up of the Timer1 oscillator.

FIGURE 13-2: EXTERNAL COMPONENTS FOR THE TIMER1 LP OSCILLATOR

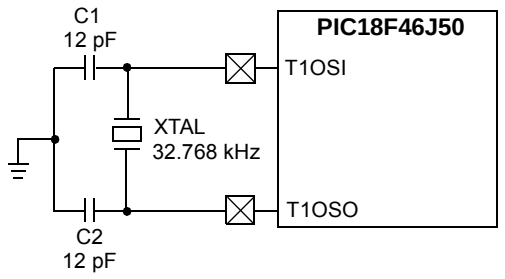

Note: See the Notes with Table 13-2 for additional information about capacitor selection.

TABLE 13-2: CAPACITOR SELECTION FOR THE TIMER OSCILLATOR(2,3,4,5)

Oscillator Type	Freq.	C1	C2
LP	32 kHz	12 pF(1)	12 pF(1)

Note 1: Microchip suggests these values as a starting point in validating the oscillator circuit.

2: Higher capacitance increases the stability of the oscillator but also increases the start-up time.

3: Since each resonator/crystal has its own characteristics, the user should consult the resonator/crystal manufacturer for appropriate values of external components.

4: Capacitor values are for design guidance only. Values listed would be typical of a C_L = 10 pF rated crystal when LPT1OSC = 1.

5: Incorrect capacitance value may result in a frequency not meeting the crystal manufacturer's tolerance specification.

The Timer1 crystal oscillator drive level is determined based on the LPT1OSC (CONFIG2L<4>) Configuration bit. The Higher Drive Level mode, LPT1OSC = 1, is intended to drive a wide variety of 32.768 kHz crystals with a variety of load capacitance (C_L) ratings.

The Lower Drive Level mode is highly optimized for extremely low-power consumption. It is not intended to drive all types of 32.768 kHz crystals. In the Low Drive Level mode, the crystal oscillator circuit may not work correctly if excessively large discrete capacitors are placed on the T1OSI and T1OSO pins. This mode is only designed to work with discrete capacitances of approximately 3 pF-10 pF on each pin.

Crystal manufacturers usually specify a C_L (load capacitance) rating for their crystals. This value is related to, but not necessarily the same as, the values that should be used for C1 and C2 in Figure 13-2. See the crystal manufacturer's applications information for more details on how to select the optimum C1 and C2 for a given crystal. The optimum value depends in part on the amount of parasitic capacitance in the circuit, which is often unknown. Therefore, after values have been selected, it is highly recommended that thorough testing and validation of the oscillator be performed.

13.5.1 USING TIMER1 AS A CLOCK SOURCE

The Timer1 oscillator is also available as a clock source in power-managed modes. By setting the clock select bits, SCS<1:0> (OSCCON<1:0>), to '01', the device switches to SEC_RUN mode; both the CPU and peripherals are clocked from the Timer1 oscillator. If the IDLEN bit (OSCCON<7>) is cleared and a SLEEP instruction is executed, the device enters SEC_IDLE mode. Additional details are available in **Section 4.0 "Low-Power Modes"**.

Whenever the Timer1 oscillator is providing the clock source, the Timer1 system clock status flag, T1RUN (TCLKCON<4>), is set. This can be used to determine the controller's current clocking mode. It can also indicate the clock source currently being used by the Fail-Safe Clock Monitor. If the Clock Monitor is enabled and the Timer1 oscillator fails while providing the clock, polling the T1RUN bit will indicate whether the clock is being provided by the Timer1 oscillator or another source.

13.5.2 TIMER1 OSCILLATOR LAYOUT CONSIDERATIONS

The Timer1 oscillator circuit draws very little power during operation. Due to the low-power nature of the oscillator, it may also be sensitive to rapidly changing signals in close proximity. This is especially true when the oscillator is configured for extremely Low-Power mode (LPT1OSC = 0).

The oscillator circuit, displayed in Figure 13-2, should be located as close as possible to the microcontroller. There should be no circuits passing within the oscillator circuit boundaries other than VSS or VDD.

If a high-speed circuit must be located near the oscillator (such as the ECCP1 pin in Output Compare or PWM mode, or the primary oscillator using the OSC2 pin), a grounded guard ring around the oscillator circuit, as displayed in Figure 13-3, may be helpful when used on a single-sided PCB or in addition to a ground plane.

FIGURE 13-3: OSCILLATOR CIRCUIT WITH GROUNDED GUARD RING

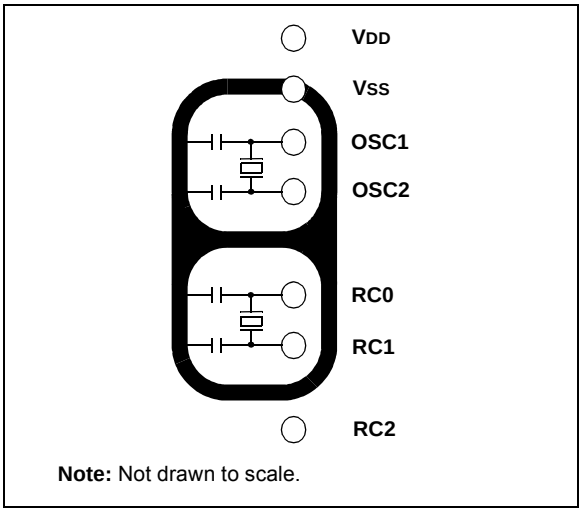

Note: Not drawn to scale.

In the Low Drive Level mode, LPT1OSC = 0, it is critical that the RC2 I/O pin signals be kept away from the oscillator circuit. Configuring RC2 as a digital output, and toggling it, can potentially disturb the oscillator circuit, even with relatively good PCB layout. If possible, it is recommended to either leave RC2 unused, or use it as an input pin with a slew rate limited signal source. If RC2 must be used as a digital output, it may be necessary to use the Higher Drive Level Oscillator mode (LPT1OSC = 1) with many PCB layouts. Even in the High Drive Level mode, careful layout procedures should still be followed when designing the oscillator circuit.

In addition to dV/dt induced noise considerations, it is also important to ensure that the circuit board is clean. Even a very small amount of conductive soldering flux residue can cause PCB leakage currents which can overwhelm the oscillator circuit.

13.6 Timer1 Interrupt

The TMR1 register pair (TMR1H:TMR1L) increments from 0000h to FFFFh and rolls over to 0000h. The Timer1 interrupt, if enabled, is generated on overflow which is latched in interrupt flag bit, TMR1IF (PIR1<0>). This interrupt can be enabled or disabled by setting or clearing the Timer1 Interrupt Enable bit, TMR1IE (PIE1<0>).

© 2011 Microchip Technology Inc.

13.7 Resetting Timer1 Using the ECCP Special Event Trigger

If ECCP1 or ECCP2 is configured to use Timer1 and to generate a Special Event Trigger in Compare mode (CCPxM<3:0> = 1011), this signal will reset Timer3. The trigger from ECCP2 will also start an A/D conversion if the A/D module is enabled (see **Section 18.3.4 "Special Event Trigger"** for more information).

The module must be configured as either a timer or a synchronous counter to take advantage of this feature. When used this way, the CCPRxH:CCPRxL register pair effectively becomes a Period register for Timer1.

If Timer1 is running in Asynchronous Counter mode, this Reset operation may not work.

In the event that a write to Timer1 coincides with a Special Event Trigger, the write operation will take precedence.

Note:	The Special Event Trigger from the ECCPx module will not set the TMR1IF interrupt flag bit (PIR1<0>).

13.8 Timer1 Gate

The Timer1 can be configured to count freely or the count can be enabled and disabled using the Timer1 gate circuitry. This is also referred to as Timer1 gate count enable.

Timer1 gate can also be driven by multiple selectable sources.

13.8.1 TIMER1 GATE COUNT ENABLE

The Timer1 Gate Enable mode is enabled by setting the TMR1GE bit of the T1GCON register. The polarity of the Timer1 Gate Enable mode is configured using the T1GPOL bit of the T1GCON register.

When Timer1 Gate Enable mode is enabled, Timer1 will increment on the rising edge of the Timer1 clock source. When Timer1 Gate Enable mode is disabled, no incrementing will occur and Timer1 will hold the current count. See Figure 13-4 for timing details.

TABLE 13-3: TIMER1 GATE ENABLE SELECTIONS

T1CLK	T1GPOL	T1G	Timer1 Operation
↑	0	0	Counts
↑	0	1	Holds Count
↑	1	0	Holds Count
↑	1	1	Counts

FIGURE 13-4: TIMER1 GATE COUNT ENABLE MODE

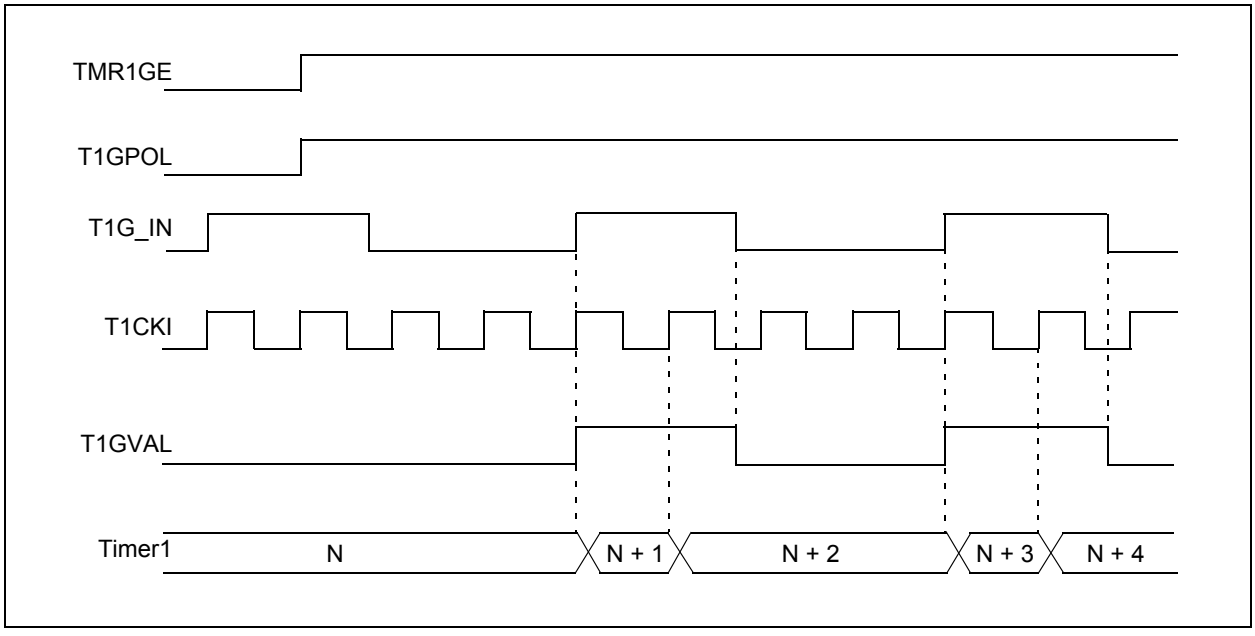

13.8.2 TIMER1 GATE SOURCE SELECTION

The Timer1 gate source can be selected from one of four different sources. Source selection is controlled by the T1GSSx bits of the T1GCON register. The polarity for each available source is also selectable. Polarity selection is controlled by the T1GPOL bit of the T1GCON register.

TABLE 13-4: TIMER1 GATE SOURCES

T1GSS<1:0>	Timer1 Gate Source
00	Timer1 Gate Pin
01	Overflow of Timer0 (TMR0 increments from FFh to 00h)
10	TMR2 to Match PR2 (TMR2 increments to match PR2)

13.8.2.1 T1G Pin Gate Operation

The T1G pin is one source for Timer1 gate control. It can be used to supply an external source to the Timer1 gate circuitry.

13.8.2.2 Timer0 Overflow Gate Operation

When Timer0 increments from FFh to 00h, a low-to-high pulse will automatically be generated and internally supplied to the Timer1 gate circuitry.

13.8.2.3 Timer2 Match Gate Operation

The TMR2 register will increment until it matches the value in the PR2 register. On the very next increment cycle, TMR2 will be reset to 00h. When this Reset occurs, a low-to-high pulse will automatically be generated and internally supplied to the Timer1 gate circuitry.

The pulse remains high for one instruction cycle and returns to low until the next match.

When T1GPOL = 1, Timer1 increments for a single instruction cycle, following TMR2 matching PR2.

With T1GPOL = 0, Timer1 increments, except during the cycle following the match.

13.8.3 TIMER1 GATE TOGGLE MODE

When Timer1 Gate Toggle mode is enabled, it is possible to measure the full cycle length of a Timer1 gate signal, as opposed to the duration of a single level pulse.

The Timer1 gate source is routed through a flip-flop that changes state on every incrementing edge of the signal. See Figure 13-5 for timing details.

The T1GVAL bit will indicate when the Toggled mode is active and the timer is counting.

The Timer1 Gate Toggle mode is enabled by setting the T1GTM bit of the T1GCON register. When the T1GTM bit is cleared, the flip-flop is cleared and held clear. This is necessary in order to control which edge is measured.

FIGURE 13-5: TIMER1 GATE TOGGLE MODE

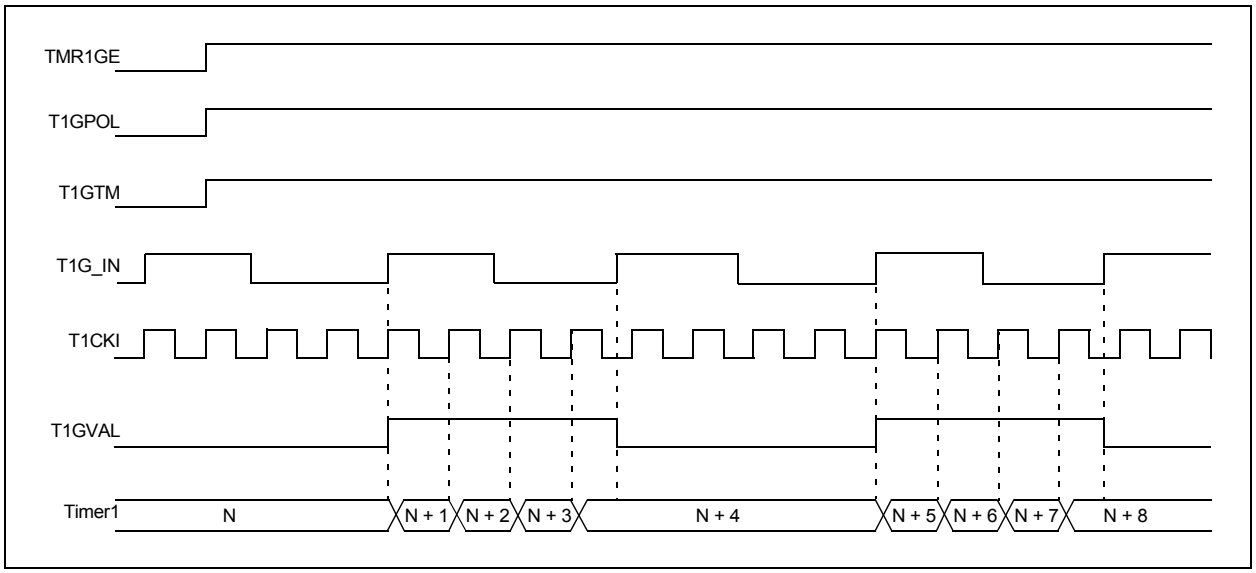

© 2011 Microchip Technology Inc.

13.8.4 TIMER1 GATE SINGLE PULSE MODE

When Timer1 Gate Single Pulse mode is enabled, it is possible to capture a single pulse gate event. Timer1 Gate Single Pulse mode is first enabled by setting the T1GSPM bit in the T1GCON register. Next, the T1GGO/$\overline{\text{T1DONE}}$ bit in the T1GCON register must be set. The Timer1 will be fully enabled on the next incrementing edge. On the next trailing edge of the pulse, the T1GGO/$\overline{\text{T1DONE}}$ bit will automatically be cleared. No other gate events will be allowed to increment Timer1 until the T1GGO/$\overline{\text{T1DONE}}$ bit is once again set in software.

Clearing the T1GSPM bit of the T1GCON register will also clear the T1GGO/$\overline{\text{T1DONE}}$ bit. See Figure 13-6 for timing details.

Enabling the Toggle mode and the Single Pulse mode, simultaneously, will permit both sections to work together. This allows the cycle times on the Timer1 gate source to be measured. See Figure 13-7 for timing details.

13.8.5 TIMER1 GATE VALUE STATUS

When the Timer1 gate value status is utilized, it is possible to read the most current level of the gate control value. The value is stored in the T1GVAL bit in the T1GCON register. The T1GVAL bit is valid even when the Timer1 gate is not enabled (TMR1GE bit is cleared).

FIGURE 13-6: TIMER1 GATE SINGLE PULSE MODE

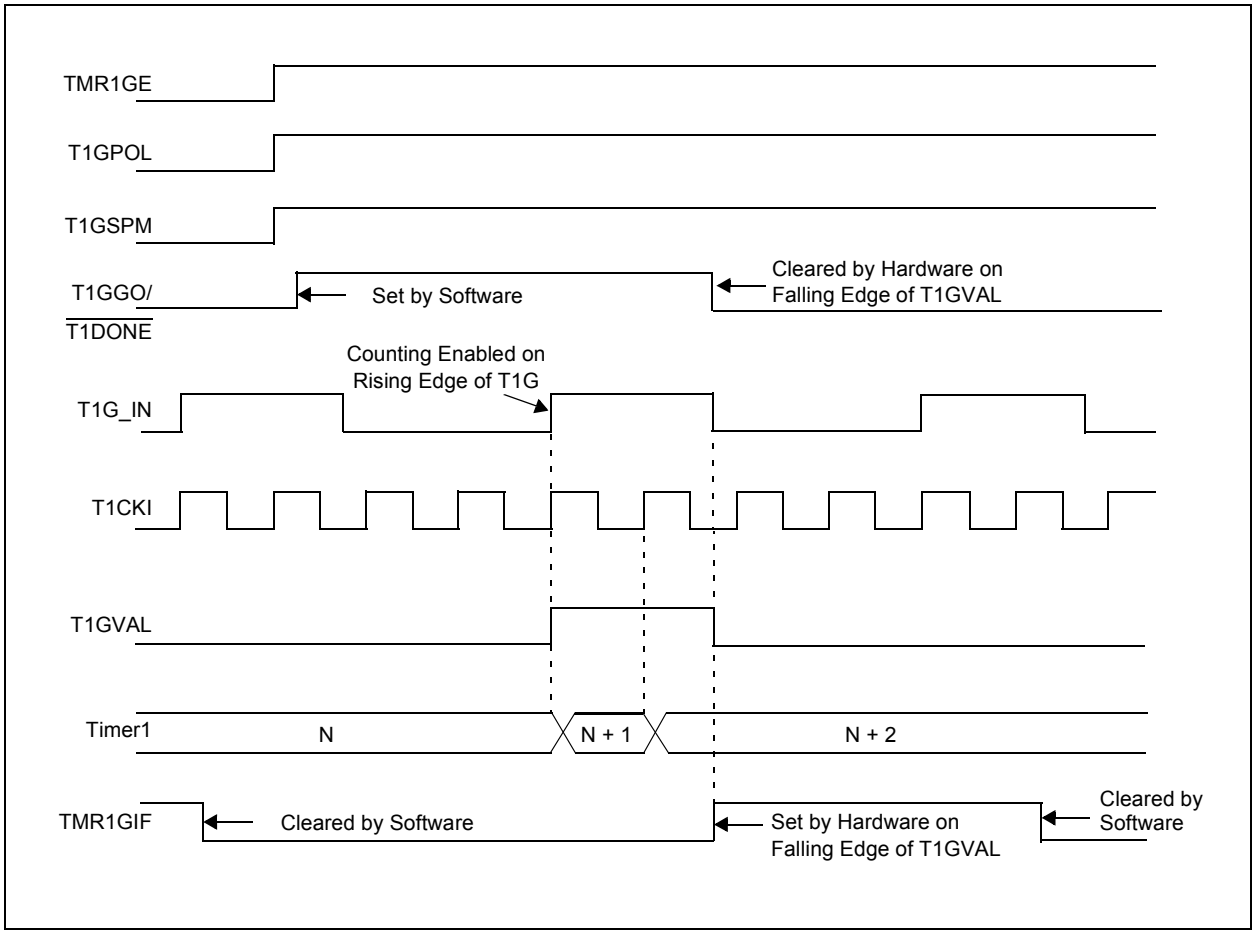

FIGURE 13-7: TIMER1 GATE SINGLE PULSE AND TOGGLE COMBINED MODE

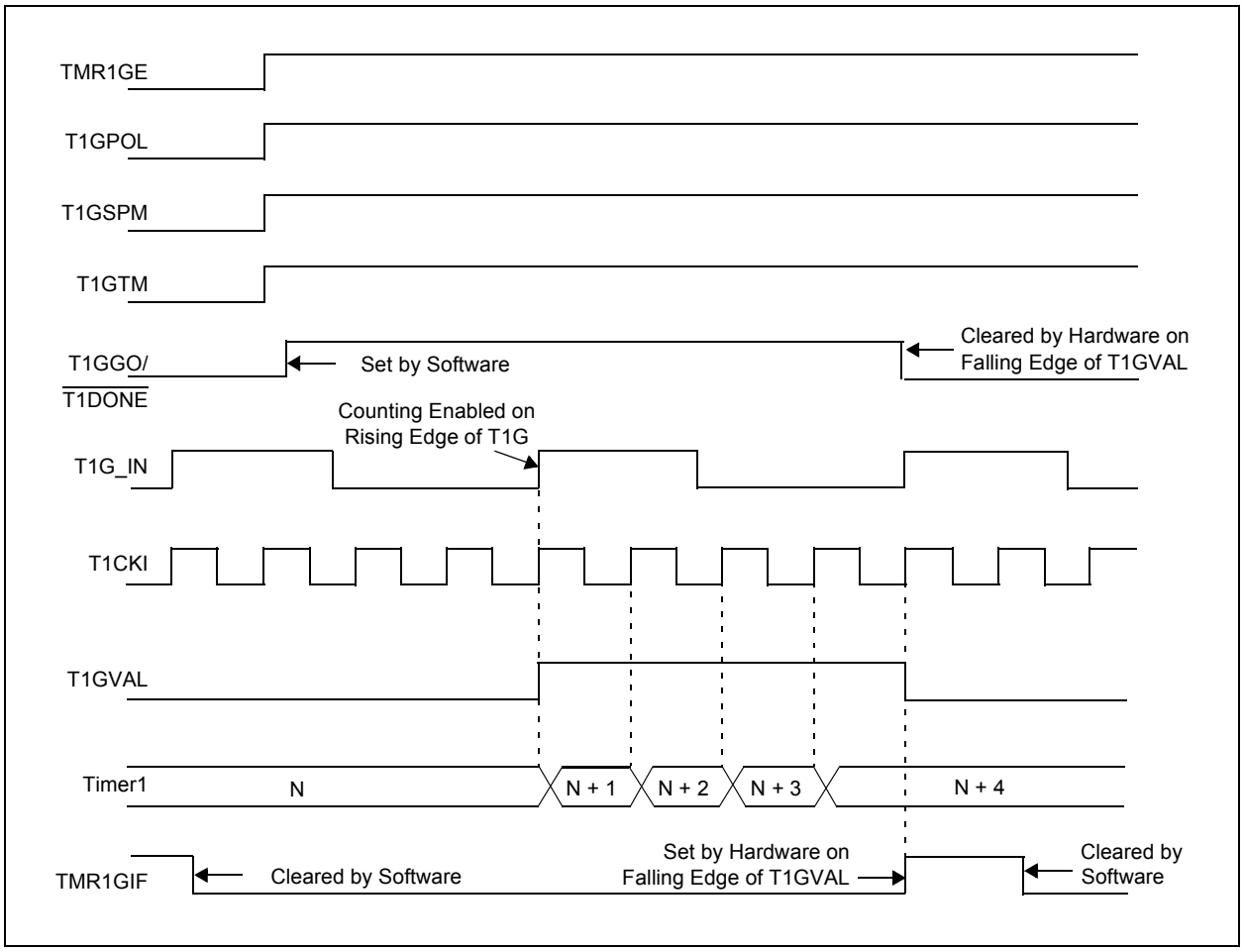

TABLE 13-5: REGISTERS ASSOCIATED WITH TIMER1 AS A TIMER/COUNTER

Name	Bit 7	Bit 6	Bit 5	Bit 4	Bit 3	Bit 2	Bit 1	Bit 0	Reset Values on Page:
INTCON	GIE/GIEH	PEIE/GIEL	TMR0IE	INT0IE	RBIE	TMR0IF	INT0IF	RBIF	89
PIR1	PMPIF(1)	ADIF	RC1IF	TX1IF	SSP1IF	CCP1IF	TMR2IF	TMR1IF	91
PIE1	PMPIE(1)	ADIE	RC1IE	TX1IE	SSP1IE	CCP1IE	TMR2IE	TMR1IE	91
IPR1	PMPIP(1)	ADIP	RC1IP	TX1IP	SSP1IP	CCP1IP	TMR2IP	TMR1IP	91
TMR1L	Timer1 Register Low Byte								90
TMR1H	Timer1 Register High Byte								90
T1CON	TMR1CS1	TMR1CS0	T1CKPS1	T1CKPS0	T1OSCEN	$\overline{\text{T1SYNC}}$	RD16	TMR1ON	90
T1GCON	TMR1GE	T1GPOL	T1GTM	T1GSPM	T1GGO/$\overline{\text{T1DONE}}$	T1GVAL	T1GSS1	T1GSS0	91
TCLKCON	—	—	—	T1RUN	—	—	T3CCP2	T3CCP1	93

Legend: Shaded cells are not used by the Timer1 module.

Note 1: These bits are only available on 44-pin devices.

© 2011 Microchip Technology Inc.

14.0 TIMER2 MODULE

The Timer2 module incorporates the following features:

- 8-bit Timer and Period registers (TMR2 and PR2, respectively)
- Readable and writable (both registers)
- Software-programmable prescaler (1:1, 1:4 and 1:16)
- Software-programmable postscaler (1:1 through 1:16)
- Interrupt on TMR2 to PR2 match
- Optional use as the shift clock for the MSSP modules

The module is controlled through the T2CON register (Register 14-1) which enables or disables the timer and configures the prescaler and postscaler. Timer2 can be shut off by clearing control bit, TMR2ON (T2CON<2>), to minimize power consumption.

A simplified block diagram of the module is shown in Figure 14-1.

14.1 Timer2 Operation

In normal operation, TMR2 is incremented from 00h on each clock (FOSC/4). A 4-bit counter/prescaler on the clock input gives direct input, divide-by-4 and divide-by-16 prescale options. These are selected by the prescaler control bits, T2CKPS<1:0> (T2CON<1:0>). The value of TMR2 is compared to that of the Period register, PR2, on each clock cycle. When the two values match, the comparator generates a match signal as the timer output. This signal also resets the value of TMR2 to 00h on the next cycle and drives the output counter/postscaler (see **Section 14.2 "Timer2 Interrupt"**).

The TMR2 and PR2 registers are both directly readable and writable. The TMR2 register is cleared on any device Reset, while the PR2 register initializes at FFh. Both the prescaler and postscaler counters are cleared on the following events:

- A write to the TMR2 register
- A write to the T2CON register
- Any device Reset (Power-on Reset (POR), $\overline{\text{MCLR}}$ Reset, Watchdog Timer Reset (WDTR) or Brown-out Reset (BOR))

TMR2 is not cleared when T2CON is written.

REGISTER 14-1: T2CON: TIMER2 CONTROL REGISTER (ACCESS FCAh)

U-0	R/W-0	R/W-0	R/W-0	R/W-0	R/W-0	R/W-0	R/W-0
—	T2OUTPS3	T2OUTPS2	T2OUTPS1	T2OUTPS0	TMR2ON	T2CKPS1	T2CKPS0
bit 7							bit 0

Legend:			
R = Readable bit	W = Writable bit	U = Unimplemented bit, read as '0'	
-n = Value at POR	'1' = Bit is set	'0' = Bit is cleared	x = Bit is unknown

bit 7 **Unimplemented:** Read as '0'

bit 6-3 **T2OUTPS<3:0>:** Timer2 Output Postscale Select bits
0000 = 1:1 Postscale
0001 = 1:2 Postscale
•
•
•
1111 = 1:16 Postscale

bit 2 **TMR2ON:** Timer2 On bit
1 = Timer2 is on
0 = Timer2 is off

bit 1-0 **T2CKPS<1:0>:** Timer2 Clock Prescale Select bits
00 = Prescaler is 1
01 = Prescaler is 4
1x = Prescaler is 16

14.2 Timer2 Interrupt

Timer2 can also generate an optional device interrupt. The Timer2 output signal (TMR2 to PR2 match) provides the input for the 4-bit output counter/postscaler. This counter generates the TMR2 Match Interrupt Flag, which is latched in TMR2IF (PIR1<1>). The interrupt is enabled by setting the TMR2 Match Interrupt Enable bit, TMR2IE (PIE1<1>).

A range of 16 postscaler options (from 1:1 through 1:16 inclusive) can be selected with the postscaler control bits, T2OUTPS<3:0> (T2CON<6:3>).

14.3 Timer2 Output

The unscaled output of TMR2 is available primarily to the ECCP modules, where it is used as a time base for operations in PWM mode.

Timer2 can be optionally used as the shift clock source for the MSSP modules operating in SPI mode. Additional information is provided in **Section 19.0 "Master Synchronous Serial Port (MSSP) Module"**.

FIGURE 14-1: TIMER2 BLOCK DIAGRAM

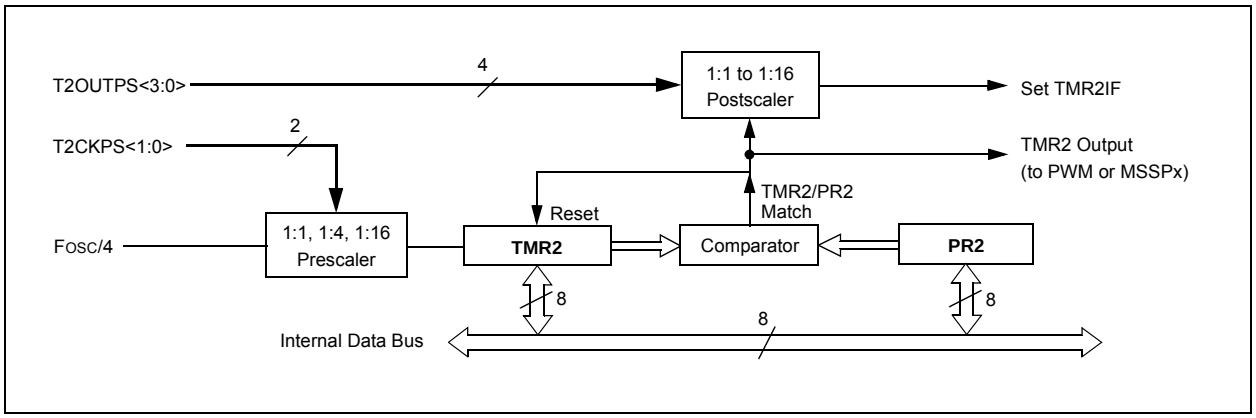

TABLE 14-1: REGISTERS ASSOCIATED WITH TIMER2 AS A TIMER/COUNTER

Name	Bit 7	Bit 6	Bit 5	Bit 4	Bit 3	Bit 2	Bit 1	Bit 0	Reset Values on Page:
INTCON	GIE/GIEH	PEIE/GIEL	TMR0IE	INT0IE	RBIE	TMR0IF	INT0IF	RBIF	89
PIR1	PMPIF(1)	ADIF	RC1IF	TX1IF	SSP1IF	CCP1IF	TMR2IF	TMR1IF	91
PIE1	PMPIE(1)	ADIE	RC1IE	TX1IE	SSP1IE	CCP1IE	TMR2IE	TMR1IE	91
IPR1	PMPIP(1)	ADIP	RC1IP	TX1IP	SSP1IP	CCP1IP	TMR2IP	TMR1IP	91
TMR2	Timer2 Register								90
T2CON	—	T2OUTPS3	T2OUTPS2	T2OUTPS1	T2OUTPS0	TMR2ON	T2CKPS1	T2CKPS0	90
PR2	Timer2 Period Register								90

Legend: — = unimplemented, read as '0'. Shaded cells are not used by the Timer2 module.

Note 1: These bits are only available on 44-pin devices.

© 2011 Microchip Technology Inc.

15.0 TIMER3 MODULE

The Timer3 timer/counter module incorporates these features:

- Software-selectable operation as a 16-bit timer or counter
- Readable and writable 8-bit registers (TMR3H and TMR3L)
- Selectable clock source (internal or external) with device clock or Timer1 oscillator internal options
- Interrupt-on-overflow
- Module Reset on ECCP Special Event Trigger

A simplified block diagram of the Timer3 module is shown in Figure 15-1.

The Timer3 module is controlled through the T3CON register (Register 15-1). It also selects the clock source options for the ECCP modules; see **Section 18.1.1 "ECCP Module and Timer Resources"** for more information.

The FOSC clock source (TMR3CS<1:0> = 01) should not be used with the ECCP capture/compare features. If the timer will be used with the capture or compare features, always select one of the other timer clocking options.

REGISTER 15-1: T3CON: TIMER3 CONTROL REGISTER (ACCESS F79h)

R/W-0	R/W-0	R/W-0	R/W-0	R/W-0	R/W-0	R/W-0	R/W-0
TMR3CS1	TMR3CS0	T3CKPS1	T3CKPS0	T3OSCEN	$\overline{\text{T3SYNC}}$	RD16	TMR3ON
bit 7							bit 0

Legend:			
R = Readable bit	W = Writable bit	U = Unimplemented bit, read as '0'	
-n = Value at POR	'1' = Bit is set	'0' = Bit is cleared	x = Bit is unknown

bit 7-6 **TMR3CS<1:0>:** Timer3 Clock Source Select bits
10 = Timer3 clock source is the Timer1 oscillator or the T3CKI digital input pin (assigned in PPS module)
01 = Timer3 clock source is the system clock (FOSC)(1)
00 = Timer3 clock source is the instruction clock (FOSC/4)

bit 5-4 **T3CKPS<1:0>**: Timer3 Input Clock Prescale Select bits
11 = 1:8 Prescale value
10 = 1:4 Prescale value
01 = 1:2 Prescale value
00 = 1:1 Prescale value

bit 3 **T3OSCEN:** Timer3 Oscillator Source Select bit
When TMR3CS<1:0> = 10:
1 = Power up the Timer1 crystal driver (T1OSC) and supply the Timer3 clock from the crystal output
0 = Timer1 crystal driver is off, Timer3 clock is from the T3CKI digital input pin assigned in PPS module(2)
When TMR3CS<1:0> = 0x:
1 = Power up the Timer1 crystal driver (T1OSC)
0 = Timer1 crystal driver is off(2)

bit 2 **$\overline{\text{T3SYNC}}$:** Timer3 External Clock Input Synchronization Control bit
When TMR3CS<1:0> = 10:
1 = Do not synchronize external clock input
0 = Synchronize external clock input
When TMR3CS<1:0> = 0x:
This bit is ignored; Timer3 uses the internal clock.

bit 1 **RD16:** 16-Bit Read/Write Mode Enable bit
1 = Enables register read/write of Timer3 in one 16-bit operation
0 = Enables register read/write of Timer3 in two 8-bit operations

bit 0 **TMR3ON:** Timer3 On bit
1 = Enables Timer3
0 = Stops Timer3

Note 1: The FOSC clock source should not be selected if the timer will be used with the ECCP capture/compare features.
2: The Timer1 oscillator crystal driver is powered whenever T1OSCEN (T1CON) or T3OSCEN (T3CON) = 1. The circuit is enabled by the logical OR of these two bits. When disabled, the inverter and feedback resistor are disabled to eliminate power drain. The TMR1ON and TMR3ON bits do not have to be enabled to power up the crystal driver.

© 2011 Microchip Technology Inc.

15.1 Timer3 Gate Control Register

The Timer3 Gate Control register (T3GCON), provided in Register 14-2, is used to control the Timer3 gate.

REGISTER 15-2: T3GCON: TIMER3 GATE CONTROL REGISTER (ACCESS F97h)(1)

R/W-0	R/W-0	R/W-0	R/W-0	R/W-0	R-x	R/W-0	R/W-0
TMR3GE	T3GPOL	T3GTM	T3GSPM	T3GGO/$\overline{\text{T3DONE}}$	T3GVAL	T3GSS1	T3GSS0
bit 7							bit 0

Legend:			
R = Readable bit	W = Writable bit	U = Unimplemented bit, read as '0'	
-n = Value at POR	'1' = Bit is set	'0' = Bit is cleared	x = Bit is unknown

bit 7 **TMR3GE:** Timer3 Gate Enable bit

If TMR3ON = 0:
This bit is ignored.

If TMR3ON = 1:
1 = Timer3 counting is controlled by the Timer3 gate function
0 = Timer3 counts regardless of Timer3 gate function

bit 6 **T3GPOL:** Timer3 Gate Polarity bit

1 = Timer3 gate is active-high (Timer3 counts when gate is high)
0 = Timer3 gate is active-low (Timer3 counts when gate is low)

bit 5 **T3GTM:** Timer3 Gate Toggle Mode bit

1 = Timer3 Gate Toggle mode is enabled.
0 = Timer3 Gate Toggle mode is disabled and toggle flip-flop is cleared
Timer3 gate flip-flop toggles on every rising edge.

bit 4 **T3GSPM:** Timer3 Gate Single Pulse Mode bit

1 = Timer3 Gate Single Pulse mode is enabled and is controlling Timer3 gate
0 = Timer3 Gate Single Pulse mode is disabled

bit 3 **T3GGO/$\overline{\text{T3DONE}}$:** Timer3 Gate Single Pulse Acquisition Status bit

1 = Timer3 gate single pulse acquisition is ready, waiting for an edge
0 = Timer3 gate single pulse acquisition has completed or has not been started
This bit is automatically cleared when T3GSPM is cleared.

bit 2 **T3GVAL:** Timer3 Gate Current State bit

Indicates the current state of the Timer3 gate that could be provided to TMR3H:TMR3L. Unaffected by Timer3 Gate Enable bit (TMR3GE).

bit 1-0 **T3GSS<1:0>:** Timer3 Gate Source Select bits

10 = TMR2 to match PR2 output
01 = Timer0 overflow output
00 = Timer3 gate pin (T3G)

Note 1: Programming the T3GCON prior to T3CON is recommended.

© 2011 Microchip Technology Inc.

REGISTER 15-3: TCLKCON: TIMER CLOCK CONTROL REGISTER (BANKED F52h)

U-0	U-0	U-0	R-0	U-0	U-0	R/W-0	R/W-0
—	—	—	T1RUN	—	—	T3CCP2	T3CCP1
bit 7							bit 0

Legend:			
R = Readable bit	W = Writable bit	U = Unimplemented bit, read as '0'	
-n = Value at POR	'1' = Bit is set	'0' = Bit is cleared	x = Bit is unknown

bit 7-5 **Unimplemented:** Read as '0'

bit 4 **T1RUN:** Timer1 Run Status bit
1 = Device is currently clocked by T1OSC/T1CKI
0 = System clock comes from an oscillator other than T1OSC/T1CKI

bit 3-2 **Unimplemented:** Read as '0'

bit 1-0 **T3CCP<2:1>:** ECCP Timer Assignment bits
10 = ECCP1 and ECCP2 both use Timer3 (capture/compare) and Timer4 (PWM)
01 = ECCP1 uses Timer1 (compare/capture) and Timer2 (PWM); ECCP2 uses Timer3 (capture/compare) and Timer4 (PWM)
00 = ECCP1 and ECCP2 both use Timer1 (capture/compare) and Timer2 (PWM)

15.2 Timer3 Operation

Timer3 can operate in one of three modes:

- Timer
- Synchronous Counter
- Asynchronous Counter
- Timer with Gated Control

The operating mode is determined by the clock select bits, TMR3CSx (T3CON<7:6>). When the TMR3CSx bits are cleared (= 00), Timer3 increments on every internal instruction cycle (FOSC/4). When TMR3CSx = 01, the Timer3 clock source is the system clock (FOSC), and when it is '10', Timer3 works as a counter from the external clock from the T3CKI pin (on the rising edge after the first falling edge) or the Timer1 oscillator.

FIGURE 15-1: TIMER3 BLOCK DIAGRAM

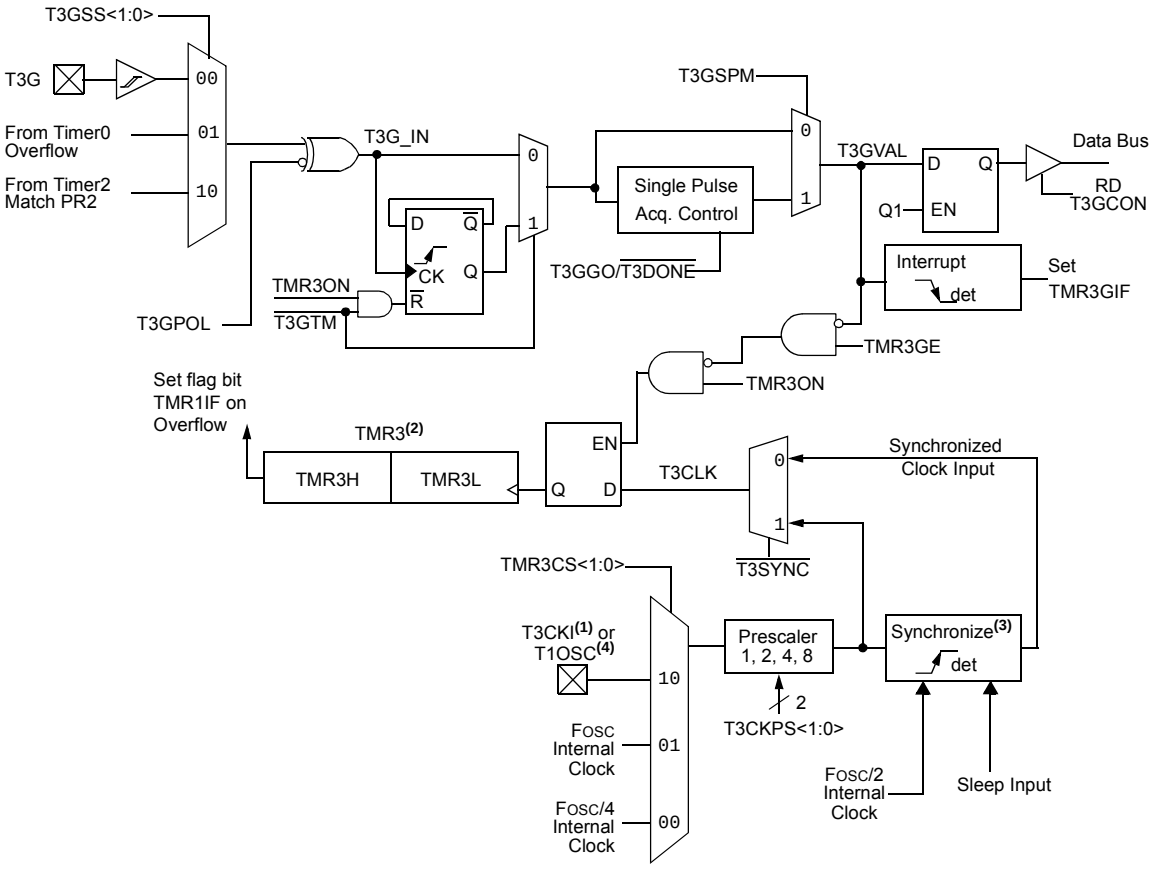

Note 1: ST buffer is a high-speed type when using T3CKI.

2: Timer3 register increments on the rising edge.

3: Synchronization does not operate while in Sleep.

4: If T3OSCEN = 1, the clock is from the Timer1 crystal output. If T3OSCEN = 0, the clock is from the T3CKI digital input pin assigned in the PPS module.

© 2011 Microchip Technology Inc.

15.3 Timer3 16-Bit Read/Write Mode

Timer3 can be configured for 16-bit reads and writes (see **Section 15.3 "Timer3 16-Bit Read/Write Mode"**). When the RD16 control bit (T3CON<1>) is set, the address for TMR3H is mapped to a buffer register for the high byte of Timer3. A read from TMR3L will load the contents of the high byte of Timer3 into the Timer3 High Byte Buffer register. This provides the user with the ability to accurately read all 16 bits of Timer3 without having to determine whether a read of the high byte, followed by a read of the low byte, has become invalid due to a rollover between reads.

A write to the high byte of Timer3 must also take place through the TMR3H Buffer register. The Timer3 high byte is updated with the contents of TMR3H when a write occurs to TMR3L. This allows a user to write all 16 bits to both the high and low bytes of Timer3 at once.

The high byte of Timer3 is not directly readable or writable in this mode. All reads and writes must take place through the Timer3 High Byte Buffer register.

Writes to TMR3H do not clear the Timer3 prescaler. The prescaler is only cleared on writes to TMR3L.

15.4 Using the Timer1 Oscillator as the Timer3 Clock Source

The Timer1 internal oscillator may be used as the clock source for Timer3. The Timer1 oscillator is enabled by setting the T1OSCEN (T1CON<3>) bit. To use it as the Timer3 clock source, the TMR3CS bit must also be set. As previously noted, this also configures Timer3 to increment on every rising edge of the oscillator source.

The Timer1 oscillator is described in **Section 13.0 "Timer1 Module"**.

15.5 Timer3 Gate

Timer3 can be configured to count freely or the count can be enabled and disabled using Timer3 gate circuitry. This is also referred to as Timer3 gate count enable.

Timer3 gate can also be driven by multiple selectable sources.

15.5.1 TIMER3 GATE COUNT ENABLE

The Timer3 Gate Enable mode is enabled by setting the TMR3GE bit of the T3GCON register. The polarity of the Timer3 Gate Enable mode is configured using the T3GPOL bit of the T3GCON register.

When Timer3 Gate Enable mode is enabled, Timer3 will increment on the rising edge of the Timer3 clock source. When Timer3 Gate Enable mode is disabled, no incrementing will occur and Timer3 will hold the current count. See Figure 15-2 for timing details.

TABLE 15-1: TIMER3 GATE ENABLE SELECTIONS

T3CLK	T3GPOL	T3G	Timer3 Operation
↑	0	0	Counts
↑	0	1	Holds Count
↑	1	0	Holds Count
↑	1	1	Counts

FIGURE 15-2: TIMER3 GATE COUNT ENABLE MODE

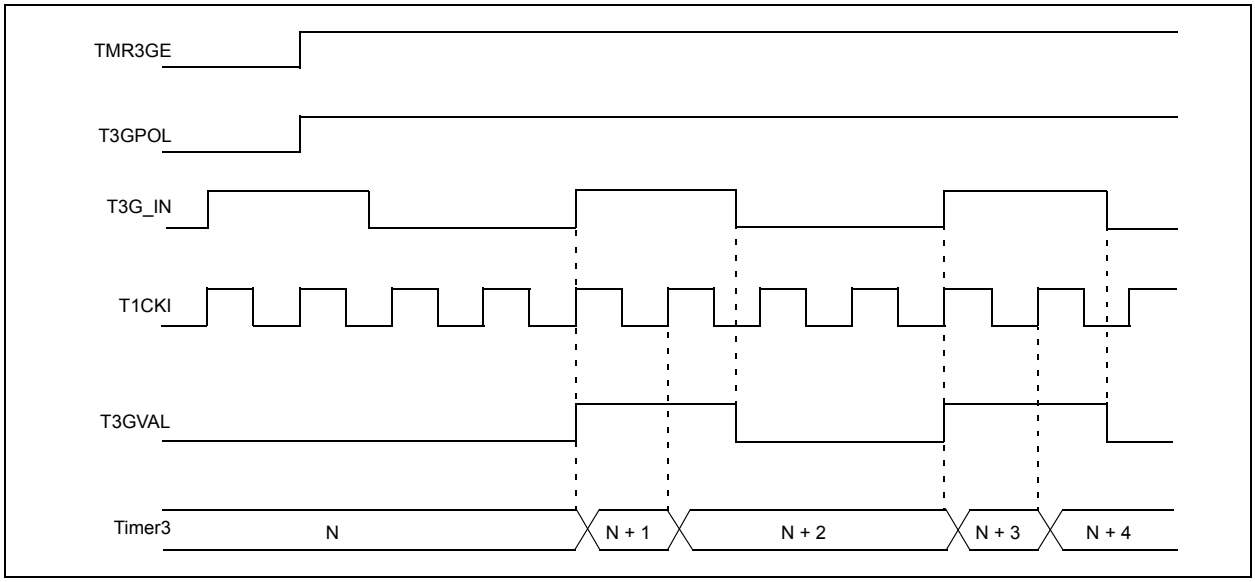

15.5.2 TIMER3 GATE SOURCE SELECTION

The Timer3 gate source can be selected from one of four different sources. Source selection is controlled by the T3GSSx bits of the T3GCON register. The polarity for each available source is also selectable. Polarity selection is controlled by the T3GPOL bit of the T3GCON register.

TABLE 15-2: TIMER3 GATE SOURCES

T3GSS<1:0>	Timer3 Gate Source
00	Timer3 Gate Pin
01	Overflow of Timer0 (TMR0 increments from FFh to 00h)
10	TMR2 to Match PR2 (TMR2 increments to match PR2)
11	Reserved

15.5.2.1 T3G Pin Gate Operation

The T3G pin is one source for Timer3 gate control. It can be used to supply an external source to the Timer3 gate circuitry.

15.5.2.2 Timer0 Overflow Gate Operation

When Timer0 increments from FFh to 00h, a low-to-high pulse will automatically be generated and internally supplied to the Timer3 gate circuitry.

15.5.2.3 Timer2 Match Gate Operation

The TMR2 register will increment until it matches the value in the PR2 register. On the very next increment cycle, TMR2 will be reset to 00h. When this Reset occurs, a low-to-high pulse will automatically be generated and internally supplied to the Timer3 gate circuitry.

15.5.3 TIMER3 GATE TOGGLE MODE

When Timer3 Gate Toggle mode is enabled, it is possible to measure the full cycle length of a Timer3 gate signal, as opposed to the duration of a single level pulse.

The Timer1 gate source is routed through a flip-flop that changes state on every incrementing edge of the signal. See Figure 15-3 for timing details.

The T3GVAL bit will indicate when the Toggled mode is active and the timer is counting.

Timer3 Gate Toggle mode is enabled by setting the T3GTM bit of the T3GCON register. When the T3GTM bit is cleared, the flip-flop is cleared and held clear. This is necessary in order to control which edge is measured.

FIGURE 15-3: TIMER3 GATE TOGGLE MODE

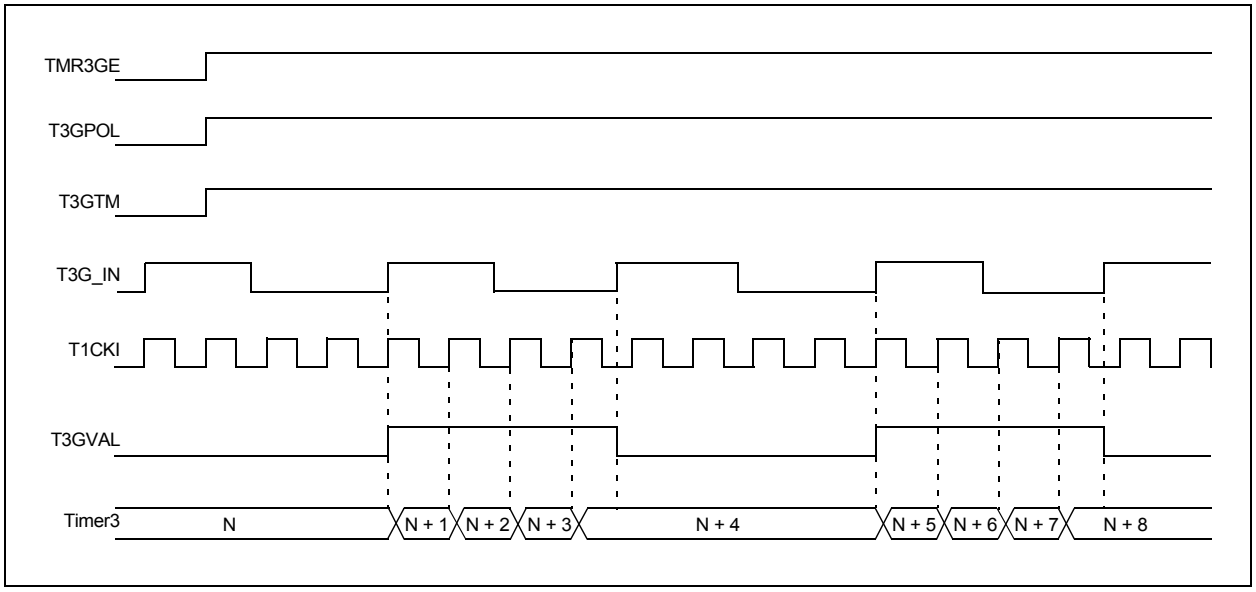

© 2011 Microchip Technology Inc.

15.5.4 TIMER3 GATE SINGLE PULSE MODE

When Timer3 Gate Single Pulse mode is enabled, it is possible to capture a single pulse gate event. Timer3 Gate Single Pulse mode is first enabled by setting the T3GSPM bit in the T3GCON register. Next, the T3GGO/$\overline{\text{T3DONE}}$ bit in the T3GCON register must be set.

The Timer3 will be fully enabled on the next incrementing edge. On the next trailing edge of the pulse, the T3GGO/$\overline{\text{T3DONE}}$ bit will automatically be cleared. No other gate events will be allowed to increment Timer3 until the T3GGO/$\overline{\text{T3DONE}}$ bit is once again set in software.

Clearing the T3GSPM bit of the T3GCON register will also clear the T3GGO/$\overline{\text{T3DONE}}$ bit. See Figure 15-4 for timing details.

Enabling the Toggle mode and the Single Pulse mode, simultaneously, will permit both sections to work together. This allows the cycle times on the Timer3 gate source to be measured. See Figure 15-5 for timing details.

FIGURE 15-4: TIMER3 GATE SINGLE PULSE MODE

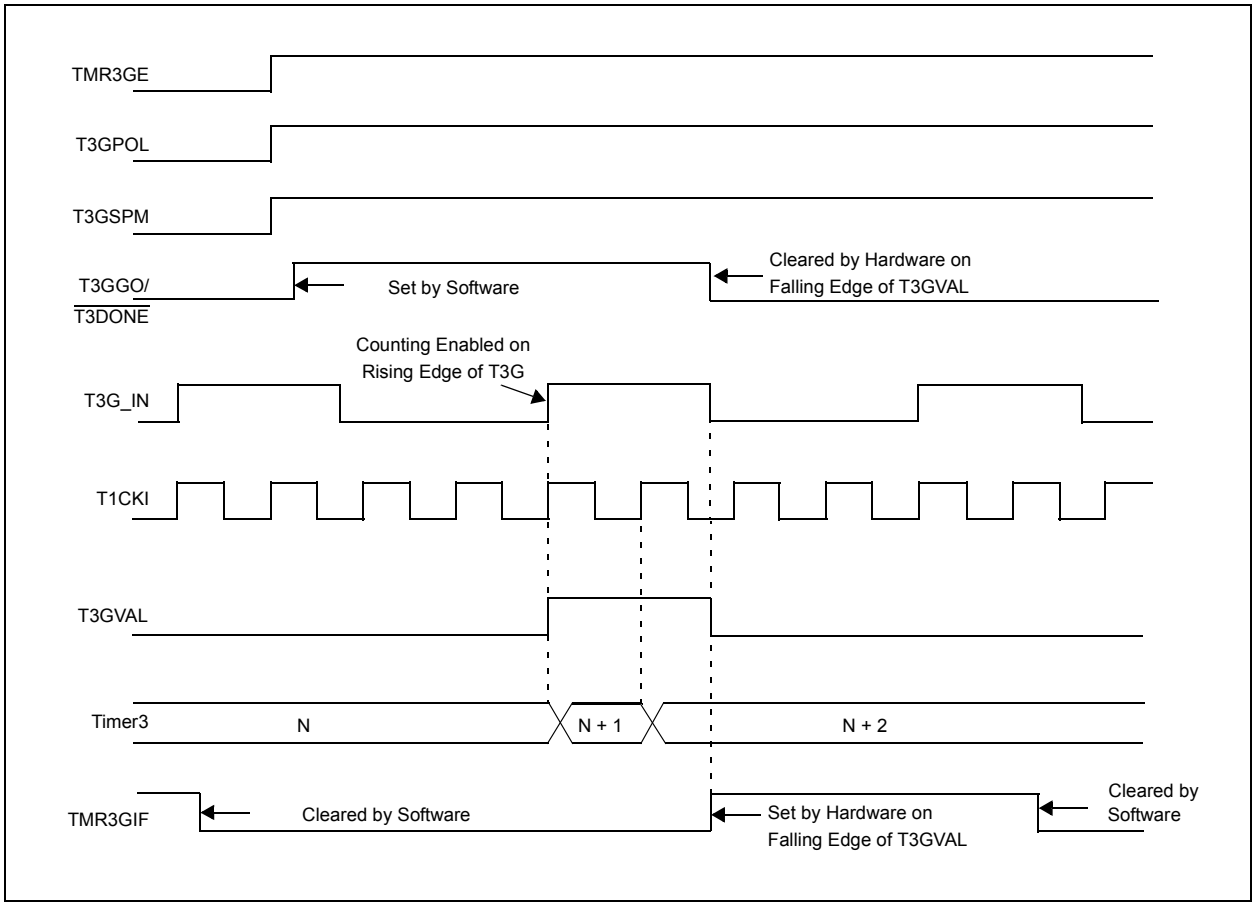

FIGURE 15-5: TIMER3 GATE SINGLE PULSE AND TOGGLE COMBINED MODE

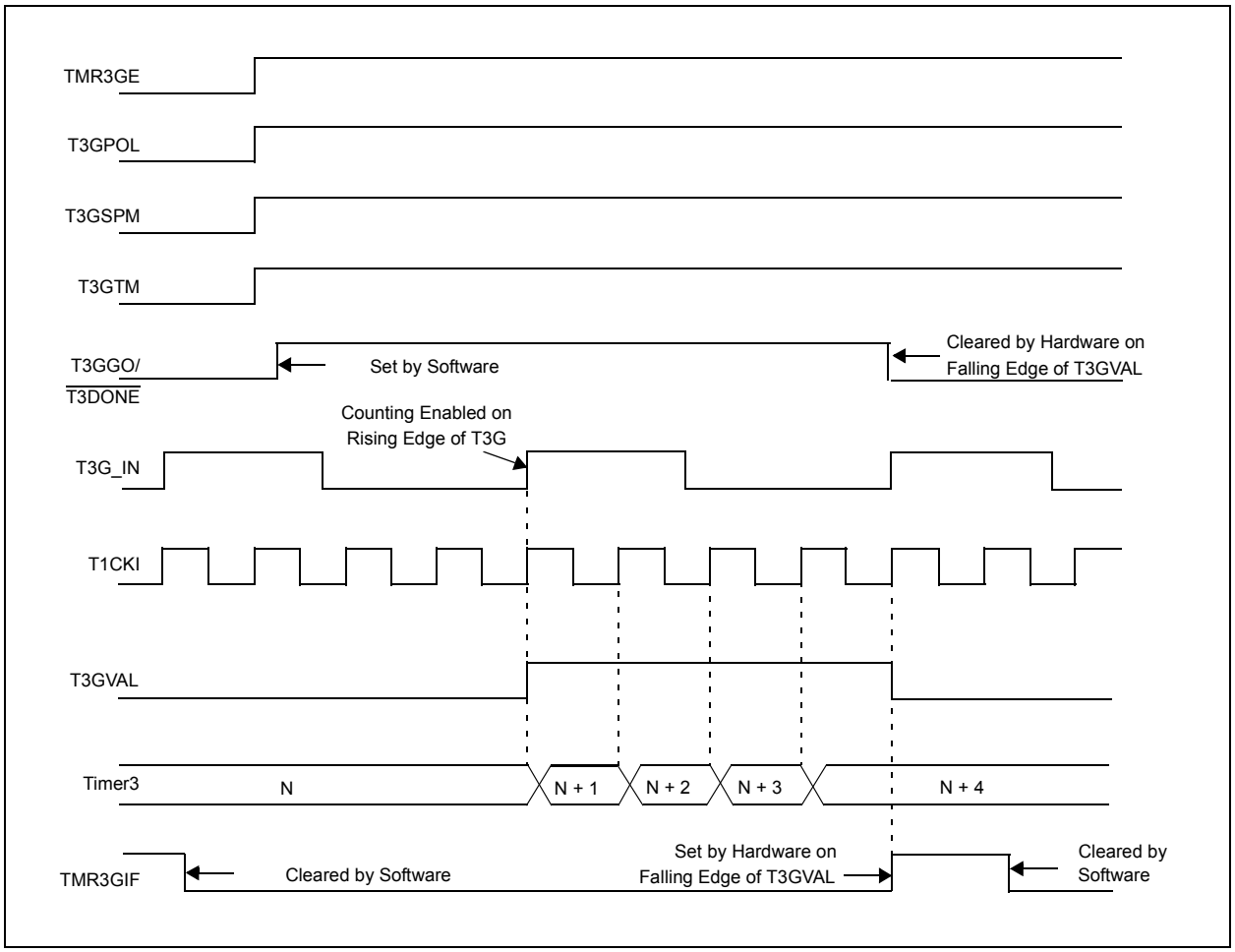

15.5.5 TIMER3 GATE VALUE STATUS

When Timer3 gate value status is utilized, it is possible to read the most current level of the gate control value. The value is stored in the T3GVAL bit in the T3GCON register. The T3GVAL bit is valid even when the Timer3 gate is not enabled (TMR3GE bit is cleared).

15.5.6 TIMER3 GATE EVENT INTERRUPT

When the Timer3 gate event interrupt is enabled, it is possible to generate an interrupt upon the completion of a gate event. When the falling edge of T3GVAL occurs, the TMR3GIF flag bit in the PIR3 register will be set. If the TMR3GIE bit in the PIE3 register is set, then an interrupt will be recognized.

The TMR3GIF flag bit operates even when the Timer3 gate is not enabled (TMR3GE bit is cleared).

© 2011 Microchip Technology Inc.

15.6 Timer3 Interrupt

The TMR3 register pair (TMR3H:TMR3L) increments from 0000h to FFFFh and overflows to 0000h. The Timer3 interrupt, if enabled, is generated on overflow and is latched in interrupt flag bit, TMR3IF (PIR2<1>). This interrupt can be enabled or disabled by setting or clearing the Timer3 Interrupt Enable bit, TMR3IE (PIE2<1>).

15.7 Resetting Timer3 Using the ECCP Special Event Trigger

If ECCP1 or ECCP2 is configured to use Timer3 and to generate a Special Event Trigger in Compare mode (CCPxM<3:0> = 1011), this signal will reset Timer3. The trigger from ECCP2 will also start an A/D conversion if the A/D module is enabled (see **Section 18.3.4 "Special Event Trigger"** for more information).

The module must be configured as either a timer or synchronous counter to take advantage of this feature. When used this way, the CCPRxH:CCPRxL register pair effectively becomes a Period register for Timer3.

If Timer3 is running in Asynchronous Counter mode, the Reset operation may not work.

In the event that a write to Timer3 coincides with a Special Event Trigger from an ECCP module, the write will take precedence.

Note:	The Special Event Triggers from the ECCPx module will not set the TMR3IF interrupt flag bit (PIR1<0>).

TABLE 15-3: REGISTERS ASSOCIATED WITH TIMER3 AS A TIMER/COUNTER

Name	Bit 7	Bit 6	Bit 5	Bit 4	Bit 3	Bit 2	Bit 1	Bit 0	Reset Values on Page:
INTCON	GIE/GIEH	PEIE/GIEL	TMR0IE	INT0IE	RBIE	TMR0IF	INT0IF	RBIF	89
PIR2	OSCFIF	CM2IF	CM1IF	USBIF	BCL1IF	HLVDIF	TMR3IF	CCP2IF	91
PIE2	OSCFIE	CM2IE	CM1IE	USBIE	BCL1IE	HLVDIE	TMR3IE	CCP2IE	91
IPR2	OSCFIP	CM2IP	CM1IP	USBIP	BCL1IP	HLVDIP	TMR3IP	CCP2IP	91
TMR3L	Timer3 Register Low Byte								92
TMR3H	Timer3 Register High Byte								92
T1CON	TMR1CS1	TMR1CS0	T1CKPS1	T1CKPS0	T1OSCEN	$\overline{\text{T1SYNC}}$	RD16	TMR1ON	90
T3CON	TMR3CS1	TMR3CS0	T3CKPS1	T3CKPS0	T3OSCEN	$\overline{\text{T3SYNC}}$	RD16	TMR3ON	92
T3GCON	TMR3GE	T3GPOL	T3GTM	T3GSPM	T3GGO/$\overline{\text{T3DONE}}$	T3GVAL	T3GSS1	T3GSS0	92
TCLKCON	—	—	—	T1RUN	—	—	T3CCP2	T3CCP1	93
PIR3	SSP2IF	BCL2IF	RC2IF	TX2IF	TMR4IF	CTMUIF	TMR3GIF	RTCCIF	91
PIE3	SSP2IE	BCL2IE	RC2IE	TX2IE	TMR4IE	CTMUIE	TMR3GIE	RTCCIE	91
IPR3	SSP2IP	BCL2IP	RC2IP	TX2IP	TMR4IP	CTMUIP	TMR3GIP	RTCCIP	91

Legend: — = unimplemented, read as '0'. Shaded cells are not used by the Timer3 module.

NOTES:

© 2011 Microchip Technology Inc.

16.0 TIMER4 MODULE

The Timer4 timer module has the following features:

- 8-Bit Timer register (TMR4)
- 8-Bit Period register (PR4)
- Readable and writable (both registers)
- Software-programmable prescaler (1:1, 1:4, 1:16)
- Software-programmable postscaler (1:1 to 1:16)
- Interrupt on TMR4 match of PR4

Timer4 has a control register shown in Register 16-1. Timer4 can be shut off by clearing control bit, TMR4ON (T4CON<2>), to minimize power consumption. The prescaler and postscaler selection of Timer4 is also controlled by this register. Figure 16-1 is a simplified block diagram of the Timer4 module.

16.1 Timer4 Operation

Timer4 can be used as the PWM time base for the PWM mode of the ECCP modules. The TMR4 register is readable and writable and is cleared on any device Reset. The input clock (Fosc/4) has a prescale option of 1:1, 1:4 or 1:16, selected by control bits, T4CKPS<1:0> (T4CON<1:0>). The match output of TMR4 goes through a 4-bit postscaler (which gives a 1:1 to 1:16 scaling inclusive) to generate a TMR4 interrupt, latched in flag bit, TMR4IF (PIR3<3>).

The prescaler and postscaler counters are cleared when any of the following occurs:

- A write to the TMR4 register
- A write to the T4CON register
- Any device Reset (Power-on Reset (POR), $\overline{\text{MCLR}}$ Reset, Watchdog Timer Reset (WDTR) or Brown-out Reset (BOR))

TMR4 is not cleared when T4CON is written.

REGISTER 16-1: T4CON: TIMER4 CONTROL REGISTER (ACCESS F76h)

U-0	R/W-0	R/W-0	R/W-0	R/W-0	R/W-0	R/W-0	R/W-0
—	T4OUTPS3	T4OUTPS2	T4OUTPS1	T4OUTPS0	TMR4ON	T4CKPS1	T4CKPS0
bit 7							bit 0

Legend:			
R = Readable bit	W = Writable bit	U = Unimplemented bit, read as ‘0’	
-n = Value at POR	‘1’ = Bit is set	‘0’ = Bit is cleared	x = Bit is unknown

bit 7 **Unimplemented:** Read as ‘0’

bit 6-3 **T4OUTPS<3:0>:** Timer4 Output Postscale Select bits
0000 = 1:1 Postscale
0001 = 1:2 Postscale
•
•
•
1111 = 1:16 Postscale

bit 2 **TMR4ON**: Timer4 On bit
1 = Timer4 is on
0 = Timer4 is off

bit 1-0 **T4CKPS<1:0>:** Timer4 Clock Prescale Select bits
00 = Prescaler is 1
01 = Prescaler is 4
1x = Prescaler is 16

16.2 Timer4 Interrupt

The Timer4 module has an 8-bit Period register, PR4, which is both readable and writable. Timer4 increments from 00h until it matches PR4 and then resets to 00h on the next increment cycle. The PR4 register is initialized to FFh upon Reset.

16.3 Output of TMR4

The output of TMR4 (before the postscaler) is used only as a PWM time base for the ECCP modules. It is not used as a baud rate clock for the MSSP modules as is the Timer2 output.

FIGURE 16-1: TIMER4 BLOCK DIAGRAM

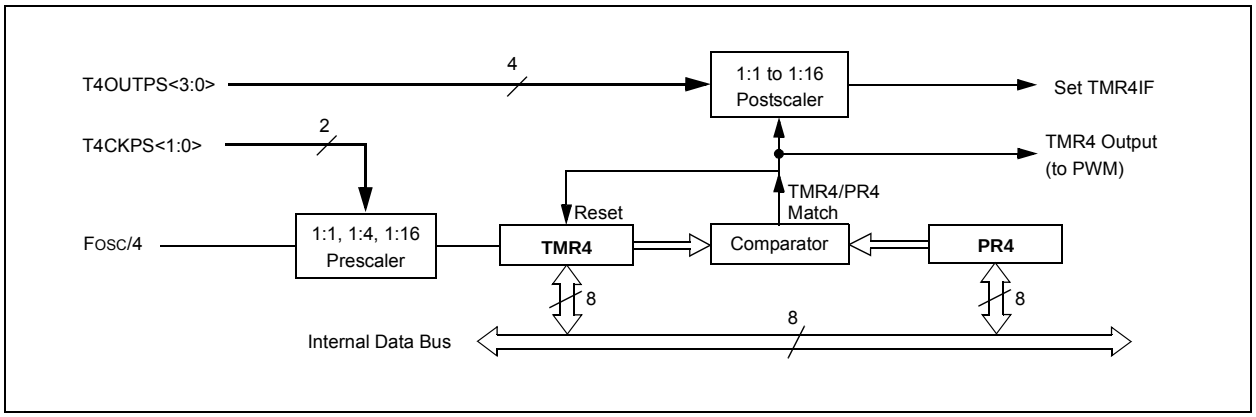

TABLE 16-1: REGISTERS ASSOCIATED WITH TIMER4 AS A TIMER/COUNTER

Name	Bit 7	Bit 6	Bit 5	Bit 4	Bit 3	Bit 2	Bit 1	Bit 0	Reset Values on Page:
INTCON	GIE/GIEH	PEIE/GIEL	TMR0IE	INT0IE	RBIE	TMR0IF	INT0IF	RBIF	89
IPR3	SSP2IP	BCL2IP	RC2IP	TX2IP	TMR4IP	CTMUIP	TMR3GIP	RTCCIP	91
PIR3	SSP2IF	BCL2IF	RC2IF	TX2IF	TMR4IF	CTMUIF	TMR3GIF	RTCCIF	91
PIE3	SSP2IE	BCL2IE	RC2IE	TX2IE	TMR4IE	CTMUIE	TMR3GIE	RTCCIE	91
TMR4	Timer4 Register								92
T4CON	—	T4OUTPS3	T4OUTPS2	T4OUTPS1	T4OUTPS0	TMR4ON	T4CKPS1	T4CKPS0	92
PR4	Timer4 Period Register								92

Legend: — = unimplemented, read as '0'. Shaded cells are not used by the Timer4 module.

© 2011 Microchip Technology Inc.

17.0 REAL-TIME CLOCK AND CALENDAR (RTCC)

The key features of the Real-Time Clock and Calendar (RTCC) module are:

- Time: hours, minutes and seconds
- 24-hour format (military time)
- Calendar: weekday, date, month and year
- Alarm configurable
- Year range: 2000 to 2099
- Leap year correction
- BCD format for compact firmware
- Optimized for low-power operation
- User calibration with auto-adjust
- Calibration range: ±2.64 seconds error per month
- Requirements: external 32.768 kHz clock crystal
- Alarm pulse or seconds clock output on RTCC pin

The RTCC module is intended for applications where accurate time must be maintained for an extended period with minimum to no intervention from the CPU. The module is optimized for low-power usage in order to provide extended battery life while keeping track of time.

The module is a 100-year clock and calendar with automatic leap year detection. The range of the clock is from 00:00:00 (midnight) on January 1, 2000 to 23:59:59 on December 31, 2099. Hours are measured in 24-hour (military time) format. The clock provides a granularity of one second with half-second visibility to the user.

FIGURE 17-1: RTCC BLOCK DIAGRAM

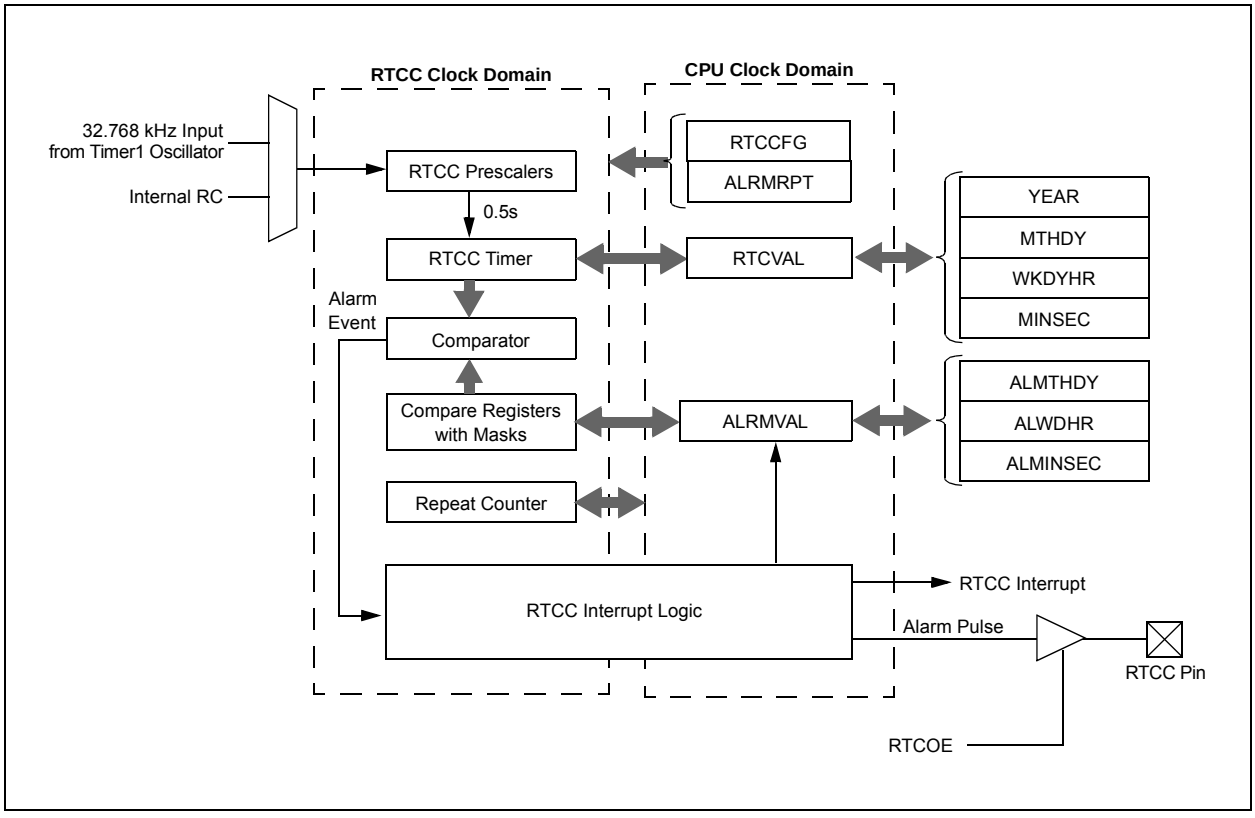

17.1 RTCC MODULE REGISTERS

The RTCC module registers are divided into following categories:

RTCC Control Registers

- RTCCFG
- RTCCAL
- PADCFG1
- ALRMCFG
- ALRMRPT

RTCC Value Registers

- RTCVALH and RTCVALL – Can access the following registers
  - YEAR
  - MONTH
  - DAY
  - WEEKDAY
  - HOUR
  - MINUTE
  - SECOND

Alarm Value Registers

- ALRMVALH and ALRMVALL – Can access the following registers:
  - ALRMMNTH
  - ALRMDAY
  - ALRMWD
  - ALRMHR
  - ALRMMIN
  - ALRMSEC

Note: The RTCVALH and RTCVALL registers can be accessed through RTCRPT<1:0>. ALRMVALH and ALRMVALL can be accessed through ALRMPTR<1:0>.

© 2011 Microchip Technology Inc.

17.1.1 RTCC CONTROL REGISTERS

REGISTER 17-1: RTCCFG: RTCC CONFIGURATION REGISTER (BANKED F3Fh)(1)

R/W-0	U-0	R/W-0	R-0	R-0	R/W-0	R/W-0	R/W-0
RTCEN(2)	—	RTCWREN	RTCSYNC	HALFSEC(3)	RTCOE	RTCPTR1	RTCPTR0
bit 7							bit 0

Legend:			
R = Readable bit	W = Writable bit	U = Unimplemented bit, read as '0'	
-n = Value at POR	'1' = Bit is set	'0' = Bit is cleared	x = Bit is unknown

bit 7 **RTCEN:** RTCC Enable bit(2)
1 = RTCC module is enabled
0 = RTCC module is disabled

bit 6 **Unimplemented:** Read as '0'

bit 5 **RTCWREN:** RTCC Value Registers Write Enable bit
1 = RTCVALH and RTCVALL registers can be written to by the user
0 = RTCVALH and RTCVALL registers are locked out from being written to by the user

bit 4 **RTCSYNC:** RTCC Value Registers Read Synchronization bit
1 = RTCVALH, RTCVALL and ALCFGRPT registers can change while reading due to a rollover ripple resulting in an invalid data read
If the register is read twice and results in the same data, the data can be assumed to be valid.
0 = RTCVALH, RTCVALL or ALCFGRPT registers can be read without concern over a rollover ripple

bit 3 **HALFSEC:** Half-Second Status bit(3)
1 = Second half period of a second
0 = First half period of a second

bit 2 **RTCOE:** RTCC Output Enable bit
1 = RTCC clock output is enabled
0 = RTCC clock output is disabled

bit 1-0 **RTCPTR<1:0>:** RTCC Value Register Window Pointer bits
Points to the corresponding RTCC Value registers when reading the RTCVALH and RTCVALL registers; the RTCPTR<1:0> value decrements on every read or write of RTCVALH until it reaches '00'.
RTCVAL<15:8>:
00 = Minutes
01 = Weekday
10 = Month
11 = Reserved
RTCVAL<7:0>:
00 = Seconds
01 = Hours
10 = Day
11 = Year

Note 1: The RTCCFG register is only affected by a POR.
2: A write to the RTCEN bit is only allowed when RTCWREN = 1.
3: This bit is read-only. It is cleared to '0' on a write to the lower half of the MINSEC register.

REGISTER 17-2: RTCCAL: RTCC CALIBRATION REGISTER (BANKED F3Eh)

R/W-0	R/W-0	R/W-0	R/W-0	R/W-0	R/W-0	R/W-0	R/W-0
CAL7	CAL6	CAL5	CAL4	CAL3	CAL2	CAL1	CAL0
bit 7							bit 0

Legend:			
R = Readable bit	W = Writable bit	U = Unimplemented bit, read as '0'	
-n = Value at POR	'1' = Bit is set	'0' = Bit is cleared	x = Bit is unknown

bit 7-0 **CAL<7:0>:** RTC Drift Calibration bits

01111111 = Maximum positive adjustment; adds 508 RTC clock pulses every minute
.
.
.
00000001 = Minimum positive adjustment; adds four RTC clock pulses every minute
00000000 = No adjustment
11111111 = Minimum negative adjustment; subtracts four RTC clock pulses every minute
.
.
.
10000000 = Maximum negative adjustment; subtracts 512 RTC clock pulses every minute

REGISTER 17-3: PADCFG1: PAD CONFIGURATION REGISTER (BANKED F3Ch)

U-0	U-0	U-0	U-0	U-0	R/W-0	R/W-0	R/W-0
—	—	—	—	—	RTSECSEL1(1)	RTSECSEL0(1)	PMPTTL
bit 7							bit 0

Legend:			
R = Readable bit	W = Writable bit	U = Unimplemented bit, read as '0'	
-n = Value at POR	'1' = Bit is set	'0' = Bit is cleared	x = Bit is unknown

bit 7-3 **Unimplemented:** Read as '0'

bit 2-1 **RTSECSEL<1:0>:** RTCC Seconds Clock Output Select bits(1)

11 = Reserved; do not use
10 = RTCC source clock is selected for the RTCC pin (pin can be INTRC or T1OSC, depending on the RTCOSC (CONFIG3L<1>) setting)
01 = RTCC seconds clock is selected for the RTCC pin
00 = RTCC alarm pulse is selected for the RTCC pin

bit 0 **PMPTTL:** PMP Module TTL Input Buffer Select bit

1 = PMP module uses TTL input buffers
0 = PMP module uses Schmitt input buffers

Note 1: To enable the actual RTCC output, the RTCOE (RTCCFG<2>) bit must be set.

© 2011 Microchip Technology Inc.

REGISTER 17-4: ALRMCFG: ALARM CONFIGURATION REGISTER (ACCESS F91h)

R/W-0	R/W-0	R/W-0	R/W-0	R/W-0	R/W-0	R/W-0	R/W-0
ALRMEN	CHIME	AMASK3	AMASK2	AMASK1	AMASK0	ALRMPTR1	ALRMPTR0
bit 7							bit 0

Legend:			
R = Readable bit	W = Writable bit	U = Unimplemented bit, read as '0'	
-n = Value at POR	'1' = Bit is set	'0' = Bit is cleared	x = Bit is unknown

bit 7 **ALRMEN:** Alarm Enable bit

1 = Alarm is enabled (cleared automatically after an alarm event whenever ARPT<7:0> = 0000 0000 and CHIME = 0)
0 = Alarm is disabled

bit 6 **CHIME:** Chime Enable bit

1 = Chime is enabled; ARPT<7:0> bits are allowed to roll over from 00h to FFh
0 = Chime is disabled; ARPT<7:0> bits stop once they reach 00h

bit 5-2 **AMASK<3:0>:** Alarm Mask Configuration bits

0000 = Every half second
0001 = Every second
0010 = Every 10 seconds
0011 = Every minute
0100 = Every 10 minutes
0101 = Every hour
0110 = Once a day
0111 = Once a week
1000 = Once a month
1001 = Once a year (except when configured for February 29th, once every four years)
101x = Reserved – do not use
11xx = Reserved – do not use

bit 1-0 **ALRMPTR<1:0>:** Alarm Value Register Window Pointer bits

Points to the corresponding Alarm Value registers when reading the ALRMVALH and ALRMVALL registers. The ALRMPTR<1:0> value decrements on every read or write of ALRMVALH until it reaches '00'.

ALRMVAL<15:8>:
00 = ALRMMIN
01 = ALRMWD
10 = ALRMMNTH
11 = Unimplemented

ALRMVAL<7:0>:
00 = ALRMSEC
01 = ALRMHR
10 = ALRMDAY
11 = Unimplemented

REGISTER 17-5: ALRMRPT: ALARM REPEAT COUNTER REGISTER (ACCESS F90h)

R/W-0	R/W-0	R/W-0	R/W-0	R/W-0	R/W-0	R/W-0	R/W-0
ARPT7	ARPT6	ARPT5	ARPT4	ARPT3	ARPT2	ARPT1	ARPT0
bit 7							bit 0

Legend:			
R = Readable bit	W = Writable bit	U = Unimplemented bit, read as ‘0’	
-n = Value at POR	‘1’ = Bit is set	‘0’ = Bit is cleared	x = Bit is unknown

bit 7-0 **ARPT<7:0>:** Alarm Repeat Counter Value bits

11111111 = Alarm will repeat 255 more times

.

.

.

00000000 = Alarm will not repeat

The counter decrements on any alarm event. The counter is prevented from rolling over from 00h to FFh unless CHIME = 1.

© 2011 Microchip Technology Inc.

17.1.2 RTCVALH AND RTCVALL REGISTER MAPPINGS

REGISTER 17-6: RESERVED REGISTER (ACCESS F99h, PTR 11b)

U-0	U-0	U-0	U-0	U-0	U-0	U-0	U-0
—	—	—	—	—	—	—	—
bit 7							bit 0

Legend:			
R = Readable bit	W = Writable bit	U = Unimplemented bit, read as '0'	
-n = Value at POR	'1' = Bit is set	'0' = Bit is cleared	x = Bit is unknown

bit 7-0 **Unimplemented:** Read as '0'

REGISTER 17-7: YEAR: YEAR VALUE REGISTER (ACCESS F98h, PTR 11b)(1)

R/W-x	R/W-x	R/W-x	R/W-x	R/W-x	R/W-x	R/W-x	R/W-x
YRTEN3	YRTEN2	YRTEN1	YRTEN0	YRONE3	YRONE2	YRONE1	YRONE0
bit 7							bit 0

Legend:			
R = Readable bit	W = Writable bit	U = Unimplemented bit, read as '0'	
-n = Value at POR	'1' = Bit is set	'0' = Bit is cleared	x = Bit is unknown

bit 7-4 **YRTEN<3:0>:** Binary Coded Decimal Value of Year's Tens Digit bits
Contains a value from 0 to 9.

bit 3-0 **YRONE<3:0>:** Binary Coded Decimal Value of Year's Ones Digit bits
Contains a value from 0 to 9.

Note 1: A write to the YEAR register is only allowed when RTCWREN = 1.

REGISTER 17-8: MONTH: MONTH VALUE REGISTER (ACCESS F99h, PTR 10b)(1)

U-0	U-0	U-0	R/W-x	R/W-x	R/W-x	R/W-x	R/W-x
—	—	—	MTHTEN0	MTHONE3	MTHONE2	MTHONE1	MTHONE0
bit 7							bit 0

Legend:			
R = Readable bit	W = Writable bit	U = Unimplemented bit, read as '0'	
-n = Value at POR	'1' = Bit is set	'0' = Bit is cleared	x = Bit is unknown

bit 7-5 **Unimplemented:** Read as '0'

bit 4 **MTHTEN0:** Binary Coded Decimal Value of Month's Tens Digit bit
Contains a value of 0 or 1.

bit 3-0 **MTHONE<3:0>:** Binary Coded Decimal Value of Month's Ones Digit bits
Contains a value from 0 to 9.

Note 1: A write to this register is only allowed when RTCWREN = 1.

REGISTER 17-9: DAY: DAY VALUE REGISTER (ACCESS F98h, PTR 10b)(1)

U-0	U-0	R/W-x	R/W-x	R/W-x	R/W-x	R/W-x	R/W-x
—	—	DAYTEN1	DAYTEN0	DAYONE3	DAYONE2	DAYONE1	DAYONE0
bit 7							bit 0

Legend:			
R = Readable bit	W = Writable bit	U = Unimplemented bit, read as '0'	
-n = Value at POR	'1' = Bit is set	'0' = Bit is cleared	x = Bit is unknown

bit 7-6 **Unimplemented:** Read as '0'

bit 5-4 **DAYTEN<1:0>:** Binary Coded Decimal value of Day's Tens Digit bits
Contains a value from 0 to 3.

bit 3-0 **DAYONE<3:0>:** Binary Coded Decimal Value of Day's Ones Digit bits
Contains a value from 0 to 9.

Note 1: A write to this register is only allowed when RTCWREN = 1.

REGISTER 17-10: WKDY: WEEKDAY VALUE REGISTER (ACCESS F99h, PTR 01b)(1)

U-0	U-0	U-0	U-0	U-0	R/W-x	R/W-x	R/W-x
—	—	—	—	—	WDAY2	WDAY1	WDAY0
bit 7							bit 0

Legend:			
R = Readable bit	W = Writable bit	U = Unimplemented bit, read as '0'	
-n = Value at POR	'1' = Bit is set	'0' = Bit is cleared	x = Bit is unknown

bit 7-3 **Unimplemented:** Read as '0'

bit 2-0 **WDAY<2:0>:** Binary Coded Decimal Value of Weekday Digit bits
Contains a value from 0 to 6.

Note 1: A write to this register is only allowed when RTCWREN = 1.

© 2011 Microchip Technology Inc.

REGISTER 17-11: HOURS: HOURS VALUE REGISTER (ACCESS F98h, PTR 01b)(1)

U-0	U-0	R/W-x	R/W-x	R/W-x	R/W-x	R/W-x	R/W-x
—	—	HRTEN1	HRTEN0	HRONE3	HRONE2	HRONE1	HRONE0
bit 7							bit 0

Legend:			
R = Readable bit	W = Writable bit	U = Unimplemented bit, read as '0'	
-n = Value at POR	'1' = Bit is set	'0' = Bit is cleared	x = Bit is unknown

bit 7-6 **Unimplemented:** Read as '0'

bit 5-4 **HRTEN<1:0>:** Binary Coded Decimal Value of Hour's Tens Digit bits
Contains a value from 0 to 2.

bit 3-0 **HRONE<3:0>:** Binary Coded Decimal Value of Hour's Ones Digit bits
Contains a value from 0 to 9.

Note 1: A write to this register is only allowed when RTCWREN = 1.

REGISTER 17-12: MINUTES: MINUTES VALUE REGISTER (ACCESS F99h, PTR 00b)

U-0	R/W-x	R/W-x	R/W-x	R/W-x	R/W-x	R/W-x	R/W-x
—	MINTEN2	MINTEN1	MINTEN0	MINONE3	MINONE2	MINONE1	MINONE0
bit 7							bit 0

Legend:			
R = Readable bit	W = Writable bit	U = Unimplemented bit, read as '0'	
-n = Value at POR	'1' = Bit is set	'0' = Bit is cleared	x = Bit is unknown

bit 7 **Unimplemented:** Read as '0'

bit 6-4 **MINTEN<2:0>:** Binary Coded Decimal Value of Minute's Tens Digit bits
Contains a value from 0 to 5.

bit 3-0 **MINONE<3:0>:** Binary Coded Decimal Value of Minute's Ones Digit bits
Contains a value from 0 to 9.

REGISTER 17-13: SECONDS: SECONDS VALUE REGISTER (ACCESS F98h, PTR 00b)

U-0	R/W-x	R/W-x	R/W-x	R/W-x	R/W-x	R/W-x	R/W-x
—	SECTEN2	SECTEN1	SECTEN0	SECONE3	SECONE2	SECONE1	SECONE0
bit 7							bit 0

Legend:			
R = Readable bit	W = Writable bit	U = Unimplemented bit, read as '0'	
-n = Value at POR	'1' = Bit is set	'0' = Bit is cleared	x = Bit is unknown

bit 7 **Unimplemented:** Read as '0'

bit 6-4 **SECTEN<2:0>:** Binary Coded Decimal Value of Second's Tens Digit bits
Contains a value from 0 to 5.

bit 3-0 **SECONE<3:0>:** Binary Coded Decimal Value of Second's Ones Digit bits
Contains a value from 0 to 9.

17.1.3 ALRMVALH AND ALRMVALL REGISTER MAPPINGS

REGISTER 17-14: ALRMMNTH: ALARM MONTH VALUE REGISTER (ACCESS F8Fh, PTR 10b)(1)

U-0	U-0	U-0	R/W-x	R/W-x	R/W-x	R/W-x	R/W-x
—	—	—	MTHTEN0	MTHONE3	MTHONE2	MTHONE1	MTHONE0
bit 7							bit 0

Legend:			
R = Readable bit	W = Writable bit	U = Unimplemented bit, read as '0'	
-n = Value at POR	'1' = Bit is set	'0' = Bit is cleared	x = Bit is unknown

bit 7-5 **Unimplemented:** Read as '0'

bit 4 **MTHTEN0:** Binary Coded Decimal Value of Month's Tens Digit bit
Contains a value of 0 or 1.

bit 3-0 **MTHONE<3:0>:** Binary Coded Decimal Value of Month's Ones Digit bits
Contains a value from 0 to 9.

Note 1: A write to this register is only allowed when RTCWREN = 1.

REGISTER 17-15: ALRMDAY: ALARM DAY VALUE REGISTER (ACCESS F8Eh, PTR 10b)(1)

U-0	U-0	R/W-x	R/W-x	R/W-x	R/W-x	R/W-x	R/W-x
—	—	DAYTEN1	DAYTEN0	DAYONE3	DAYONE2	DAYONE1	DAYONE0
bit 7							bit 0

Legend:			
R = Readable bit	W = Writable bit	U = Unimplemented bit, read as '0'	
-n = Value at POR	'1' = Bit is set	'0' = Bit is cleared	x = Bit is unknown

bit 7-6 **Unimplemented:** Read as '0'

bit 5-4 **DAYTEN<1:0>:** Binary Coded Decimal Value of Day's Tens Digit bits
Contains a value from 0 to 3.

bit 3-0 **DAYONE<3:0>:** Binary Coded Decimal Value of Day's Ones Digit bits
Contains a value from 0 to 9.

Note 1: A write to this register is only allowed when RTCWREN = 1.

© 2011 Microchip Technology Inc.

REGISTER 17-16: ALRMWD: ALARM WEEKDAY VALUE REGISTER (ACCESS F8Fh, PTR 01b)(1)

U-0	U-0	U-0	U-0	U-0	R/W-x	R/W-x	R/W-x
—	—	—	—	—	WDAY2	WDAY1	WDAY0
bit 7							bit 0

Legend:			
R = Readable bit	W = Writable bit	U = Unimplemented bit, read as '0'	
-n = Value at POR	'1' = Bit is set	'0' = Bit is cleared	x = Bit is unknown

bit 7-3 **Unimplemented:** Read as '0'

bit 2-0 **WDAY<2:0>:** Binary Coded Decimal Value of Weekday Digit bits
Contains a value from 0 to 6.

Note 1: A write to this register is only allowed when RTCWREN = 1.

REGISTER 17-17: ALRMHR: ALARM HOURS VALUE REGISTER (ACCESS F8Eh, PTR 01b)(1)

U-0	U-0	R/W-x	R/W-x	R/W-x	R/W-x	R/W-x	R/W-x
—	—	HRTEN1	HRTEN0	HRONE3	HRONE2	HRONE1	HRONE0
bit 7							bit 0

Legend:			
R = Readable bit	W = Writable bit	U = Unimplemented bit, read as '0'	
-n = Value at POR	'1' = Bit is set	'0' = Bit is cleared	x = Bit is unknown

bit 7-6 **Unimplemented:** Read as '0'

bit 5-4 **HRTEN<1:0>:** Binary Coded Decimal Value of Hour's Tens Digit bits
Contains a value from 0 to 2.

bit 3-0 **HRONE3:HRONE0:** Binary Coded Decimal Value of Hour's Ones Digit bits
Contains a value from 0 to 9.

Note 1: A write to this register is only allowed when RTCWREN = 1.

REGISTER 17-18: ALRMMIN: ALARM MINUTES VALUE REGISTER (ACCESS F8Fh, PTR 00b)

U-0	R/W-x	R/W-x	R/W-x	R/W-x	R/W-x	R/W-x	R/W-x
—	MINTEN2	MINTEN1	MINTEN0	MINONE3	MINONE2	MINONE1	MINONE0
bit 7							bit 0

Legend:			
R = Readable bit	W = Writable bit	U = Unimplemented bit, read as '0'	
-n = Value at POR	'1' = Bit is set	'0' = Bit is cleared	x = Bit is unknown

bit 7 **Unimplemented:** Read as '0'

bit 6-4 **MINTEN<2:0>:** Binary Coded Decimal Value of Minute's Tens Digit bits
Contains a value from 0 to 5.

bit 3-0 **MINONE<3:0>:** Binary Coded Decimal Value of Minute's Ones Digit bits
Contains a value from 0 to 9.

REGISTER 17-19: ALRMSEC: ALARM SECONDS VALUE REGISTER (ACCESS F8Eh, PTR 00b)

U-0	R/W-x	R/W-x	R/W-x	R/W-x	R/W-x	R/W-x	R/W-x
—	SECTEN2	SECTEN1	SECTEN0	SECONE3	SECONE2	SECONE1	SECONE0
bit 7							bit 0

Legend:			
R = Readable bit	W = Writable bit	U = Unimplemented bit, read as '0'	
-n = Value at POR	'1' = Bit is set	'0' = Bit is cleared	x = Bit is unknown

bit 7 **Unimplemented:** Read as '0'

bit 6-4 **SECTEN<2:0>:** Binary Coded Decimal Value of Second's Tens Digit bits
Contains a value from 0 to 5.

bit 3-0 **SECONE<3:0>:** Binary Coded Decimal Value of Second's Ones Digit bits
Contains a value from 0 to 9.

© 2011 Microchip Technology Inc.

17.1.4 RTCEN BIT WRITE

An attempt to write to the RTCEN bit while RTCWREN = 0 will be ignored. RTCWREN must be set before a write to RTCEN can take place.

Like the RTCEN bit, the RTCVALH and RTCVALL registers can only be written to when RTCWREN = 1. A write to these registers, while RTCWREN = 0, will be ignored.

17.2 Operation

17.2.1 REGISTER INTERFACE

The register interface for the RTCC and alarm values is implemented using the Binary Coded Decimal (BCD) format. This simplifies the firmware, when using the module, as each of the digits is contained within its own 4-bit value (see Figure 17-2 and Figure 17-3).

FIGURE 17-2: TIMER DIGIT FORMAT

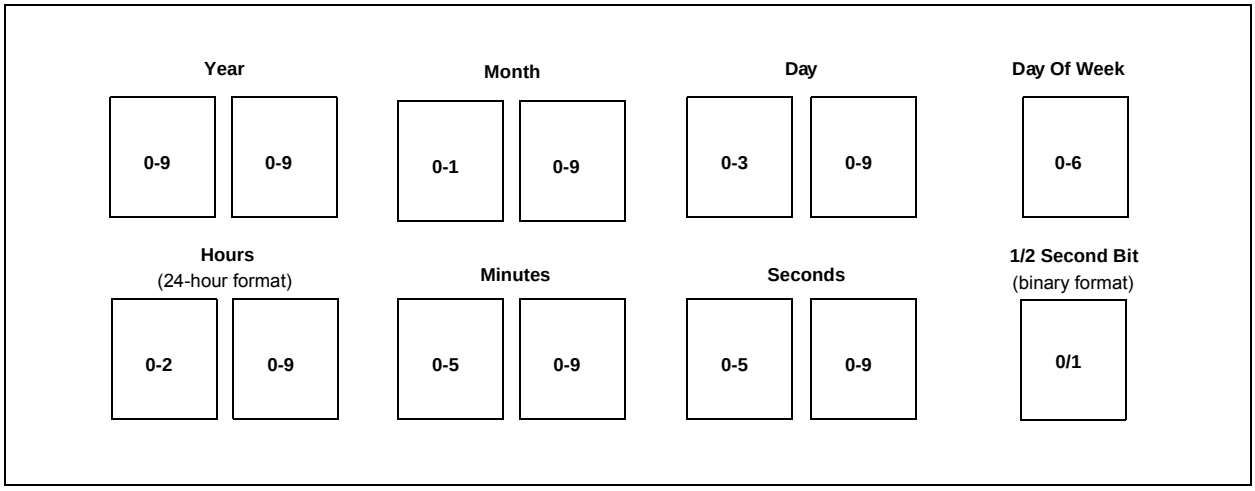

FIGURE 17-3: ALARM DIGIT FORMAT

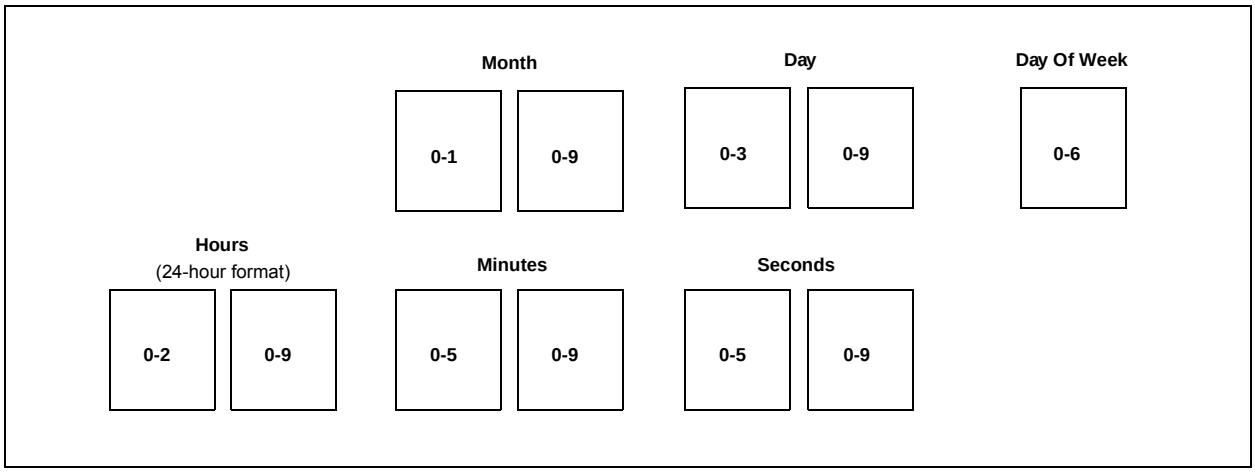

17.2.2 CLOCK SOURCE

As mentioned earlier, the RTCC module is intended to be clocked by an external Real-Time Clock (RTC) crystal oscillating at 32.768 kHz, but can also be clocked by the INTRC. The RTCC clock selection is decided by the RTCOSC bit (CONFIG3L<1>).

Calibration of the crystal can be done through this module to yield an error of 3 seconds or less per month. (For further details, see **Section 17.2.9 "Calibration"**.)

FIGURE 17-4: CLOCK SOURCE MULTIPLEXING

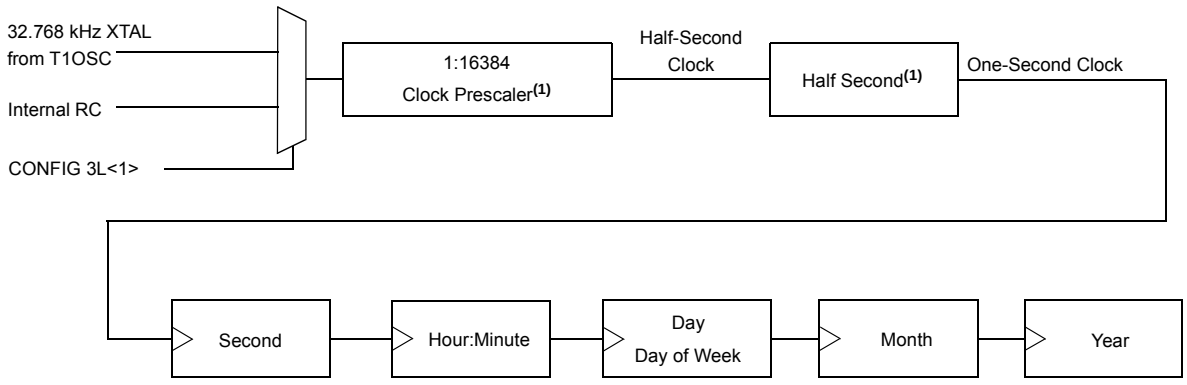

Note 1: Writing to the lower half of the MINSEC register resets all counters, allowing fraction of a second synchronization; clock prescaler is held in Reset when RTCEN = 0.

17.2.2.1 Real-Time Clock Enable

The RTCC module can be clocked by an external, 32.768 kHz crystal (Timer1 oscillator or T1CKI input) or the INTRC oscillator, which can be selected in CONFIG3L<1>.

If the Timer1 oscillator will be used as the clock source for the RTCC, make sure to enable it by setting T1CON<3> (T1OSCEN). The selected RTC clock can be brought out to the RTCC pin by the RTSECSEL<1:0> bits in the PADCFG register.

17.2.3 DIGIT CARRY RULES

This section explains which timer values are affected when there is a rollover.

- Time of Day: From 23:59:59 to 00:00:00 with a carry to the Day field
- Month: From 12/31 to 01/01 with a carry to the Year field
- Day of Week: From 6 to 0 with no carry (see Table 17-1)
- Year Carry: From 99 to 00; this also surpasses the use of the RTCC

For the day to month rollover schedule, see Table 17-2.

Considering that the following values are in BCD format, the carry to the upper BCD digit will occur at a count of 10 and not at 16 (SECONDS, MINUTES, HOURS, WEEKDAY, DAYS and MONTHS).

TABLE 17-1: DAY OF WEEK SCHEDULE

Day of Week	
Sunday	0
Monday	1
Tuesday	2
Wednesday	3
Thursday	4
Friday	5
Saturday	6

© 2011 Microchip Technology Inc.

TABLE 17-2: DAY TO MONTH ROLLOVER SCHEDULE

Month	Maximum Day Field
01 (January)	31
02 (February)	28 or 29(1)
03 (March)	31
04 (April)	30
05 (May)	31
06 (June)	30
07 (July)	31
08 (August)	31
09 (September)	30
10 (October)	31
11 (November)	30
12 (December)	31

Note 1: See **Section 17.2.4 "Leap Year"**.

17.2.4 LEAP YEAR

Since the year range on the RTCC module is 2000 to 2099, the leap year calculation is determined by any year divisible by '4' in the above range. Only February is effected in a leap year.

February will have 29 days in a leap year and 28 days in any other year.

17.2.5 GENERAL FUNCTIONALITY

All Timer registers containing a time value of seconds or greater are writable. The user configures the time by writing the required year, month, day, hour, minutes and seconds to the Timer registers, via Register Pointers (see **Section 17.2.8 "Register Mapping"**).

The timer uses the newly written values and proceeds with the count from the required starting point.

The RTCC is enabled by setting the RTCEN bit (RTCCFGL<7>). If enabled, while adjusting these registers, the timer still continues to increment. However, any time the MINSEC register is written to, both of the timer prescalers are reset to '0'. This allows fraction of a second synchronization.

The Timer registers are updated in the same cycle as the write instruction's execution by the CPU. The user must ensure that when RTCEN = 1, the updated registers will not be incremented at the same time. This can be accomplished in several ways:

- By checking the RTCSYNC bit (RTCCFG<4>)
- By checking the preceding digits from which a carry can occur
- By updating the registers immediately following the seconds pulse (or alarm interrupt)

The user has visibility to the half-second field of the counter. This value is read-only and can be reset only by writing to the lower half of the SECONDS register.

17.2.6 SAFETY WINDOW FOR REGISTER READS AND WRITES

The RTCSYNC bit indicates a time window during which the RTCC Clock Domain registers can be safely read and written without concern about a rollover. When RTCSYNC = 0, the registers can be safely accessed by the CPU.

Whether RTCSYNC = 1 or 0, the user should employ a firmware solution to ensure that the data read did not fall on a rollover boundary, resulting in an invalid or partial read. This firmware solution would consist of reading each register twice and then comparing the two values. If the two values matched, then, a rollover did not occur.

17.2.7 WRITE LOCK

In order to perform a write to any of the RTCC Timer registers, the RTCWREN bit (RTCCFG<5>) must be set.

To avoid accidental writes to the RTCC Timer register, it is recommended that the RTCWREN bit (RTCCFG<5>) be kept clear at any time other than while writing to. For the RTCWREN bit to be set, there is only one instruction cycle time window allowed between the 55h/AA sequence and the setting of RTCWREN. For that reason, it is recommended that users follow the code example in Example 17-1.

EXAMPLE 17-1: SETTING THE RTCWREN BIT

```
movlb   0x0F            ;RTCCFG is banked
bcf     INTCON, GIE     ;Disable interrupts
movlw   0x55
movwf   EECON2
movlw   0xAA
movwf   EECON2
bsf     RTCCFG,RTCWREN
```

17.2.8 REGISTER MAPPING

To limit the register interface, the RTCC Timer and Alarm Timer registers are accessed through corresponding Register Pointers. The RTCC Value register window (RTCVALH<15:8> and RTCVALL<7:0>) uses the RTCPTR bits (RTCCFG<1:0>) to select the required Timer register pair.

By reading or writing to the RTCVALH register, the RTCC Pointer value (RTCPTR<1:0>) decrements by 1 until it reaches '00'. Once it reaches '00', the MINUTES and SECONDS value will be accessible through RTCVALH and RTCVALL until the pointer value is manually changed.

TABLE 17-3: RTCVALH AND RTCVALL REGISTER MAPPING

RTCPTR<1:0>	RTCC Value Register Window	
	RTCVAL<15:8>	RTCVAL<7:0>
00	MINUTES	SECONDS
01	WEEKDAY	HOURS
10	MONTH	DAY
11	—	YEAR

The Alarm Value register window (ALRMVALH and ALRMVALL) uses the ALRMPTR bits (ALRMCFG<1:0>) to select the desired Alarm register pair.

By reading or writing to the ALRMVALH register, the Alarm Pointer value, ALRMPTR<1:0>, decrements by 1 until it reaches '00'. Once it reaches '00', the ALRMMIN and ALRMSEC value will be accessible through ALRMVALH and ALRMVALL until the pointer value is manually changed.

TABLE 17-4: ALRMVAL REGISTER MAPPING

ALRMPTR<1:0>	Alarm Value Register Window	
	ALRMVAL<15:8>	ALRMVAL<7:0>
00	ALRMMIN	ALRMSEC
01	ALRMWD	ALRMHR
10	ALRMMNTH	ALRMDAY
11	—	—

17.2.9 CALIBRATION

The real-time crystal input can be calibrated using the periodic auto-adjust feature. When properly calibrated, the RTCC can provide an error of less than three seconds per month.

To perform this calibration, find the number of error clock pulses and store the value in the lower half of the RTCCAL register. The 8-bit, signed value – loaded into RTCCAL – is multiplied by '4' and will either be added or subtracted from the RTCC timer, once every minute.

To calibrate the RTCC module:

1. Use another timer resource on the device to find the error of the 32.768 kHz crystal.
2. Convert the number of error clock pulses per minute (see Equation 17-1).

EQUATION 17-1: CONVERTING ERROR CLOCK PULSES

(Ideal Frequency (32,768) – Measured Frequency) * 60 = Error Clocks per Minute

   - If the oscillator is *faster* than ideal (negative result from Step 2), the RCFGCALL register value needs to be negative. This causes the specified number of clock pulses to be subtracted from the timer counter once every minute.
   - If the oscillator is *slower* than ideal (positive result from Step 2), the RCFGCALL register value needs to be positive. This causes the specified number of clock pulses to be added to the timer counter once every minute.
3. Load the RTCCAL register with the correct value.

Writes to the RTCCAL register should occur only when the timer is turned off, or immediately after the rising edge of the seconds pulse.

Note: In determining the crystal's error value, it is the user's responsibility to include the crystal's initial error from drift due to temperature or crystal aging.

© 2011 Microchip Technology Inc.

17.3 Alarm

The alarm features and characteristics are:

- Configurable from half a second to one year
- Enabled using the ALRMEN bit (ALRMCFG<7>, Register 17-4)
- Offers one-time and repeat alarm options

17.3.1 CONFIGURING THE ALARM

The alarm feature is enabled using the ALRMEN bit.

This bit is cleared when an alarm is issued. The bit will not be cleared if the CHIME bit = 1 or if ALRMRPT ≠ 0.

The interval selection of the alarm is configured through the ALRMCFG bits (AMASK<3:0>). (See Figure 17-5.) These bits determine which and how many digits of the alarm must match the clock value for the alarm to occur.

The alarm can also be configured to repeat based on a preconfigured interval. The number of times this occurs after the alarm is enabled is stored in the ALRMRPT register.

Note:	While the alarm is enabled (ALRMEN = 1), changing any of the registers, other than the RTCCAL, ALRMCFG and ALRMRPT registers, and the CHIME bit, can result in a false alarm event leading to a false alarm interrupt. To avoid this, only change the timer and alarm values while the alarm is disabled (ALRMEN = 0). It is recommended that the ALRMCFG and ALRMRPT registers, and CHIME bit be changed when RTCSYNC = 0.

FIGURE 17-5: ALARM MASK SETTINGS

Alarm Mask Setting AMASK<3:0>	Day of the Week	Month	Day	Hours	Minutes	Seconds
0000 – Every half second 0001 – Every second						
0010 – Every 10 seconds						s
0011 – Every minute						s s
0100 – Every 10 minutes					m	s s
0101 – Every hour					m m	s s
0110 – Every day				h h	m m	s s
0111 – Every week	d			h h	m m	s s
1000 – Every month			d d	h h	m m	s s
1001 – Every year(1)		m m	d d	h h	m m	s s

Note 1: Annually, except when configured for February 29.

When ALRMCFG = 00 and the CHIME bit = 0 (ALRMCFG<6>), the repeat function is disabled and only a single alarm will occur. The alarm can be repeated up to 255 times by loading the ALRMRPT register with FFh.

After each alarm is issued, the ALRMRPT register is decremented by one. Once the register has reached '00', the alarm will be issued one last time.

After the alarm is issued a last time, the ALRMEN bit is cleared automatically and the alarm turned off. Indefinite repetition of the alarm can occur if the CHIME bit = 1.

When CHIME = 1, the alarm is not disabled when the ALRMRPT register reaches '00', but it rolls over to FF and continues counting indefinitely.

17.3.2 ALARM INTERRUPT

At every alarm event, an interrupt is generated. Additionally, an alarm pulse output is provided that operates at half the frequency of the alarm.

The alarm pulse output is completely synchronous with the RTCC clock and can be used as a trigger clock to other peripherals. This output is available on the RTCC pin. The output pulse is a clock with a 50% duty cycle and a frequency half that of the alarm event (see Figure 17-6).

The RTCC pin also can output the seconds clock. The user can select between the alarm pulse, generated by the RTCC module, or the seconds clock output.

The RTSECSEL (PADCFG1<2:1>) bits select between these two outputs:

- Alarm pulse – RTSECSEL<2:1> = 00
- Seconds clock – RTSECSEL<2:1> = 0

FIGURE 17-6: TIMER PULSE GENERATION

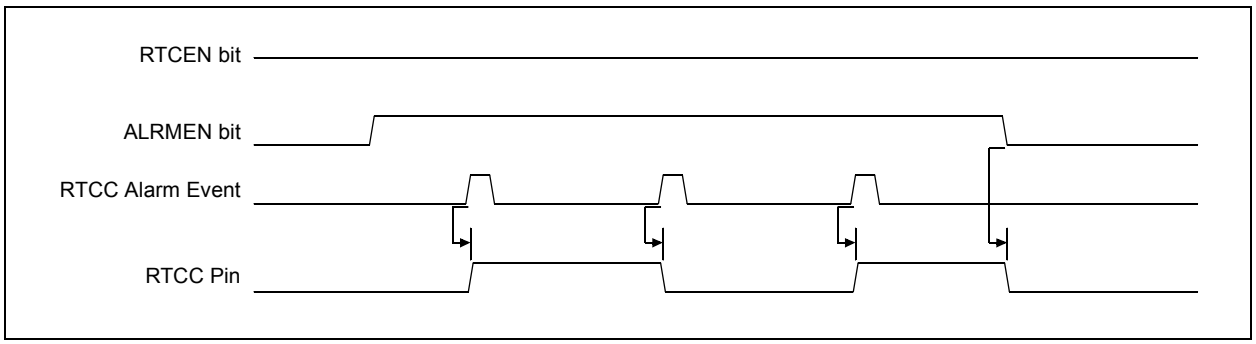

17.4 Low-Power Modes

The timer and alarm can optionally continue to operate while in Sleep, Idle and even Deep Sleep mode. An alarm event can be used to wake-up the microcontroller from any of these Low-Power modes.

17.5 Reset

17.5.1 DEVICE RESET

When a device Reset occurs, the ALRMCFG and ALRMRPT registers are forced to the Reset state, causing the alarm to be disabled (if enabled prior to the Reset). If the RTCC was enabled, it will continue to operate when a basic device Reset occurs.

17.5.2 POWER-ON RESET (POR)

The RTCCFG and ALRMRPT registers are reset only on a POR. Once the device exits the POR state, the clock registers should be reloaded with the desired values.

The timer prescaler values can be reset only by writing to the SECONDS register. No device Reset can affect the prescalers.

© 2011 Microchip Technology Inc.

17.6 Register Maps

Table 17-5, Table 17-6 and Table 17-7 summarize the registers associated with the RTCC module.

TABLE 17-5: RTCC CONTROL REGISTERS

File Name	Bit 7	Bit 6	Bit 5	Bit 4	Bit 3	Bit 2	Bit 1	Bit 0	All Resets
RTCCFG	RTCEN	—	RTCWREN	RTCSYNC	HALFSEC	RTCOE	RTCPTR1	RTCPTR0	0000
RTCCAL	CAL7	CAL6	CAL5	CAL4	CAL3	CAL2	CAL1	CAL0	0000
PADCFG1	—	—	—	—	—	RTSECSEL1	RTSECSEL0	PMPTTL	0000
ALRMCFG	ALRMEN	CHIME	AMASK3	AMASK2	AMASK1	AMASK0	ALRMPTR1	ALRMPTR0	0000
ALRMRPT	ARPT7	ARPT6	ARPT5	ARPT4	ARPT3	ARPT2	ARPT1	ARPT0	0000
PIR3	SSP2IF	BCL2IF	RC2IF	TX2IF	TMR4IF	CTMUIF	TMR3GIF	RTCCCIF	0000
PIE3	SSP2IE	BCL2IE	RC2IE	TX2IE	TMR4IE	CTMUIE	TMR3GIE	RTCCCIE	0000
IPR3	SSP2IP	BCL2IP	RC2IP	TX2IP	TMR4IP	CTMUIP	TMR3GIP	RTCCCIP	0000

Legend: — = unimplemented, read as '0'. Reset values are shown in hexadecimal for 44-pin devices.

TABLE 17-6: RTCC VALUE REGISTERS

File Name	Bit 7	Bit 6	Bit 5	Bit 4	Bit 3	Bit 2	Bit 1	Bit 0	All Resets
RTCVALH	RTCC Value Register Window High Byte, Based on RTCPTR<1:0>								xxxx
RTCVALL	RTCC Value Register Window Low Byte, Based on RTCPTR<1:0>								xxxx
RTCCFG	RTCEN	—	RTCWREN	RTCSYNC	HALFSEC	RTCOE	RTCPTR1	RTCPTR0	0000
ALRMCFG	ALRMEN	CHIME	AMASK3	AMASK2	AMASK1	AMASK0	ALRMPTR1	ALRMPTR0	0000
ALRMVALH	Alarm Value Register Window High Byte, Based on ALRMPTR<1:0>								xxxx
ALRMVALL	Alarm Value Register Window Low Byte, Based on ALRMPTR<1:0>								xxxx

Legend: — = unimplemented, read as '0'. Reset values are shown in hexadecimal for 44-pin devices.

TABLE 17-7: ALARM VALUE REGISTERS

File Name	Bit 7	Bit 6	Bit 5	Bit 4	Bit 3	Bit 2	Bit 1	Bit 0	All Resets
ALRMRPT	ARPT7	ARPT6	ARPT5	ARPT4	ARPT3	ARPT2	ARPT1	ARPT0	0000
ALRMVALH	Alarm Value Register Window High Byte, Based on ALRMPTR<1:0>								xxxx
ALRMVALL	Alarm Value Register Window Low Byte, Based on ALRMPTR<1:0>								xxxx
RTCCAL	CAL7	CAL6	CAL5	CAL4	CAL3	CAL2	CAL1	CAL0	0000
RTCVALH	RTCC Value Register Window High Byte, Based on RTCPTR<1:0>								xxxx
RTCVALL	RTCC Value Register Window Low Byte, Based on RTCPTR<1:0>								xxxx

Legend: — = unimplemented, read as '0'. Reset values are shown in hexadecimal for 44-pin devices.

NOTES:

© 2011 Microchip Technology Inc.

18.0 ENHANCED CAPTURE/COMPARE/PWM (ECCP) MODULE

PIC18F46J50 family devices have two Enhanced Capture/Compare/PWM (ECCP) modules: ECCP1 and ECCP2. These modules contain a 16-bit register, which can operate as a 16-bit Capture register, a 16-bit Compare register or a PWM Master/Slave Duty Cycle register. These ECCP modules are upward compatible with the standard CCP module found in many prior PIC16 and PIC18 devices.

Note:	Register and bit names referencing one of the two ECCP modules substitute an 'x' for the module number. For example, registers CCP**1**CON and CCP**2**CON, which have the same definitions, are called CCP**x**CON. Figures and diagrams use ECCP1-based names, but those names also apply to ECCP2, with a "2" replacing the illustration name's "1". When writing firmware, the "x" in register and bit names must be replaced with the appropriate module number.

ECCP1 and ECCP2 are implemented as standard CCP modules with enhanced PWM capabilities. These include:

- Provision for two or four output channels
- Output Steering modes
- Programmable polarity
- Programmable dead-band control
- Automatic shutdown and restart

The enhanced features are discussed in detail in **Section 18.5 "PWM (Enhanced Mode)"**.

Note:	PxA, PxB, PxC and PxD are associated with the remappable pins (RPn).

REGISTER 18-1: CCPxCON: ENHANCED CAPTURE/COMPARE/PWM x CONTROL REGISTER (ACCESS FBAh, FB4h)

R/W-0	R/W-0	R/W-0	R/W-0	R/W-0	R/W-0	R/W-0	R/W-0
PxM1	PxM0	DCxB1	DCxB0	CCPxM3	CCPxM2	CCPxM1	CCPxM0
bit 7							bit 0

Legend:			
R = Readable bit	W = Writable bit	U = Unimplemented bit, read as '0'	
-n = Value at POR	'1' = Bit is set	'0' = Bit is cleared	x = Bit is unknown

bit 7-6 **PxM<1:0>:** Enhanced PWM Output Configuration bits

If CCPxM<3:2> = 00, 01, 10:

xx = PxA is assigned as capture/compare input/output; PxB, PxC and PxD are assigned as port pins

If CCPxM<3:2> = 11:

00 = Single output: PxA, PxB, PxC and PxD are controlled by steering (see **Section 18.5.7 "Pulse Steering Mode"**)

01 = Full-bridge output forward: PxD is modulated; PxA is active; PxB, PxC is inactive

10 = Half-bridge output: PxA, PxB are modulated with dead-band control; PxC and PxD are assigned as port pins

11 = Full-bridge output reverse: PxB is modulated; PxC is active; PxA and PxD are inactive

bit 5-4 **DCxB<1:0>**: PWM Duty Cycle bit 1 and bit 0

Capture mode:

Unused.

Compare mode:

Unused.

PWM mode:

These bits are the two LSbs of the 10-bit PWM duty cycle. The eight MSbs of the duty cycle are found in CCPRxL.

bit 3-0 **CCPxM<3:0>**: ECCPx Mode Select bits

0000 = Capture/Compare/PWM off (resets ECCPx module)

0001 = Reserved

0010 = Compare mode, toggle output on match

0011 = Capture mode

0100 = Capture mode, every falling edge

0101 = Capture mode, every rising edge

0110 = Capture mode, every 4th rising edge

0111 = Capture mode, every 16th rising edge

1000 = Compare mode, initialize ECCPx pin low, set output on compare match (set CCPxIF)

1001 = Compare mode, initialize ECCPx pin high, clear output on compare match (set CCPxIF)

1010 = Compare mode, generate software interrupt only, ECCPx pin reverts to I/O state

1011 = Compare mode, trigger special event (ECCPx resets TMR1 or TMR3, starts A/D conversion, sets CCxIF bit)

1100 = PWM mode; PxA and PxC are active-high; PxB and PxD are active-high

1101 = PWM mode; PxA and PxC are active-high; PxB and PxD are active-low

1110 = PWM mode; PxA and PxC are active-low; PxB and PxD are active-high

1111 = PWM mode; PxA and PxC are active-low; PxB and PxD are active-low

© 2011 Microchip Technology Inc.

In addition to the expanded range of modes available through the CCPxCON and ECCPxAS registers, the ECCP modules have two additional registers associated with Enhanced PWM operation and auto-shutdown features. They are:

- ECCPxDEL (Enhanced PWM Control)
- PSTRxCON (Pulse Steering Control)

18.1 ECCP Outputs and Configuration

The Enhanced CCP module may have up to four PWM outputs, depending on the selected operating mode. These outputs, designated PxA through PxD, are routed through the Peripheral Pin Select (PPS) module. Therefore, individual functions may be mapped to any of the remappable I/O pins, RPn. The outputs that are active depend on the ECCP operating mode selected. The pin assignments are summarized in Table 18-4.

To configure the I/O pins as PWM outputs, the proper PWM mode must be selected by setting the PxM<1:0> and CCPxM<3:0> bits. The appropriate TRIS direction bits for the port pins must also be set as outputs and the output functions need to be assigned to I/O pins in the PPS module. (For details on configuring the module, see **Section 10.7 "Peripheral Pin Select (PPS)"**.)

18.1.1 ECCP MODULE AND TIMER RESOURCES

The ECCP modules utilize Timers 1, 2, 3 or 4, depending on the mode selected. Timer1 and Timer3 are available to modules in Capture or Compare modes, while Timer2 and Timer4 are available for modules in PWM mode.

TABLE 18-1: ECCP MODE – TIMER RESOURCE

ECCP Mode	Timer Resource
Capture	Timer1 or Timer3
Compare	Timer1 or Timer3
PWM	Timer2 or Timer4

The assignment of a particular timer to a module is determined by the Timer-to-ECCP enable bits in the TCLKCON register (Register 13-3). The interactions between the two modules are depicted in Figure 18-1. Capture operations are designed to be used when the timer is configured for Synchronous Counter mode. Capture operations may not work as expected if the associated timer is configured for Asynchronous Counter mode.

18.2 Capture Mode

In Capture mode, the CCPRxH:CCPRxL register pair captures the 16-bit value of the TMR1 or TMR3 registers when an event occurs on the corresponding ECCPx pin. An event is defined as one of the following:

- Every falling edge
- Every rising edge
- Every 4th rising edge
- Every 16th rising edge

The event is selected by the mode select bits, CCPxM<3:0>, of the CCPxCON register. When a capture is made, the interrupt request flag bit, CCPxIF, is set; it must be cleared by software. If another capture occurs before the value in register CCPRx is read, the old captured value is overwritten by the new captured value.

18.2.1 ECCP PIN CONFIGURATION

In Capture mode, the appropriate ECCPx pin should be configured as an input by setting the corresponding TRIS direction bit.

Additionally, the ECCPx input function needs to be assigned to an I/O pin through the Peripheral Pin Select module. For details on setting up the remappable pins, see **Section 10.7 "Peripheral Pin Select (PPS)"**.

Note:	If the ECCPx pin is configured as an output, a write to the port can cause a capture condition.

18.2.2 TIMER1/TIMER3 MODE SELECTION

The timers that are to be used with the capture feature (Timer1 and/or Timer3) must be running in Timer mode or Synchronized Counter mode. In Asynchronous Counter mode, the capture operation may not work. The timer to be used with each ECCP module is selected in the TCLKCON register (Register 13-3).

18.2.3 SOFTWARE INTERRUPT

When the Capture mode is changed, a false capture interrupt may be generated. The user should keep the CCPxIE interrupt enable bit clear to avoid false interrupts. The interrupt flag bit, CCPxIF, should also be cleared following any such change in operating mode.

18.2.4 ECCP PRESCALER

There are four prescaler settings in Capture mode; they are specified as part of the operating mode selected by the mode select bits (CCPxM<3:0>). Whenever the ECCP module is turned off, or Capture mode is disabled, the prescaler counter is cleared. This means that any Reset will clear the prescaler counter.

Switching from one capture prescaler to another may generate an interrupt. Also, the prescaler counter will not be cleared; therefore, the first capture may be from a non-zero prescaler. Example 18-1 provides the recommended method for switching between capture prescalers. This example also clears the prescaler counter and will not generate the "false" interrupt.

EXAMPLE 18-1: CHANGING BETWEEN CAPTURE PRESCALERS

```
CLRF   CCP1CON     ; Turn CCP module off
MOVLW  NEW_CAPT_PS ; Load WREG with the
                   ; new prescaler mode
                   ; value and CCP ON
MOVWF  CCP1CON     ; Load CCP1CON with
                   ; this value
```

FIGURE 18-1: CAPTURE MODE OPERATION BLOCK DIAGRAM

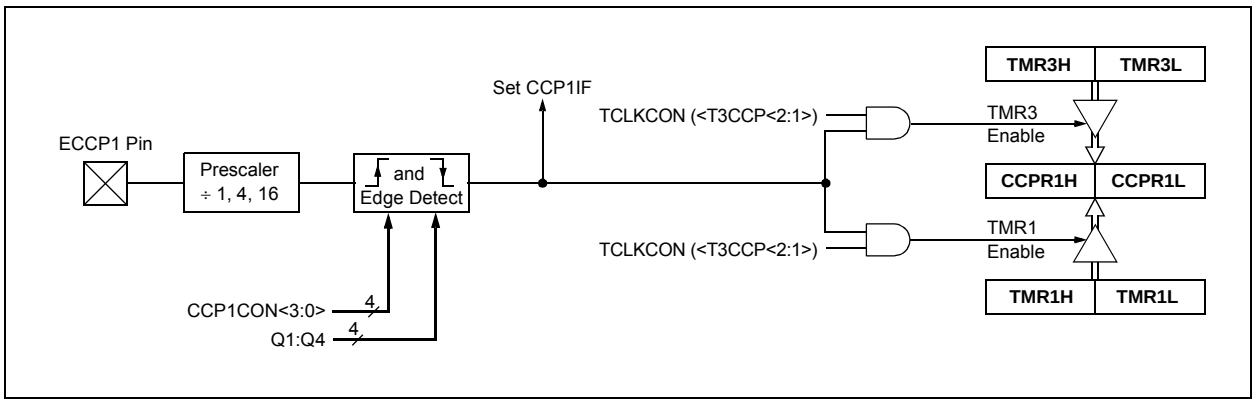

© 2011 Microchip Technology Inc.

18.3 Compare Mode

In Compare mode, the 16-bit CCPRx register value is constantly compared against either the TMR1 or TMR3 register pair value. When a match occurs, the ECCPx pin can be:

- Driven high
- Driven low
- Toggled (high-to-low or low-to-high)
- Remain unchanged (that is, reflects the state of the I/O latch)

The action on the pin is based on the value of the mode select bits (CCPxM<3:0>). At the same time, the interrupt flag bit, CCPxIF, is set.

18.3.1 ECCP PIN CONFIGURATION

Users must configure the ECCPx pin as an output by clearing the appropriate TRIS bit.

Note:	Clearing the CCPxCON register will force the ECCPx compare output latch (depending on device configuration) to the default low level. This is not the PORTx I/O data latch.

18.3.2 TIMER1/TIMER3 MODE SELECTION

Timer1 and/or Timer3 must be running in Timer mode or Synchronized Counter mode if the ECCP module is using the compare feature. In Asynchronous Counter mode, the compare operation will not work reliably.

18.3.3 SOFTWARE INTERRUPT MODE

When the Generate Software Interrupt mode is chosen (CCPxM<3:0> = 1010), the ECCPx pin is not affected; only the CCPxIF interrupt flag is affected.

18.3.4 SPECIAL EVENT TRIGGER

The ECCP module is equipped with a Special Event Trigger. This is an internal hardware signal generated in Compare mode to trigger actions by other modules. The Special Event Trigger is enabled by selecting the Compare Special Event Trigger mode (CCPxM<3:0> = 1011).

The Special Event Trigger resets the Timer register pair for whichever timer resource is currently assigned as the module's time base. This allows the CCPRx registers to serve as a programmable period register for either timer.

The Special Event Trigger can also start an A/D conversion. In order to do this, the A/D Converter must already be enabled.

FIGURE 18-2: COMPARE MODE OPERATION BLOCK DIAGRAM

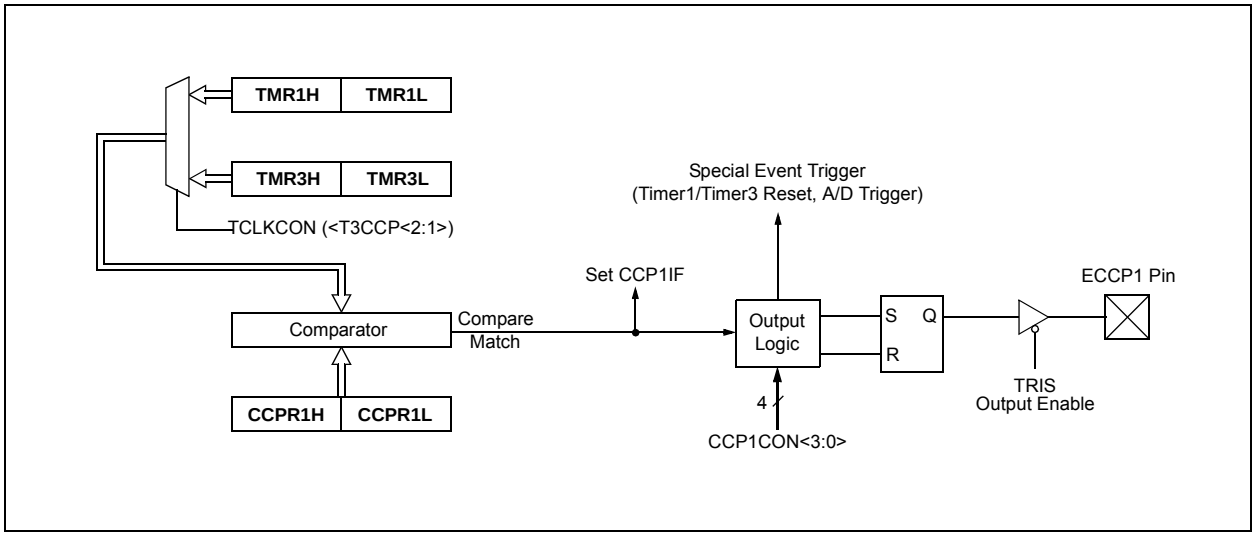

18.4 PWM Mode

In Pulse-Width Modulation (PWM) mode, the CCPx pin produces up to a 10-bit resolution PWM output.

Figure 18-3 shows a simplified block diagram of the CCP module in PWM mode.

For a step-by-step procedure on how to set up a CCP module for PWM operation, see **Section 18.4.3 "Setup for PWM Operation"**.

FIGURE 18-3: SIMPLIFIED PWM BLOCK DIAGRAM

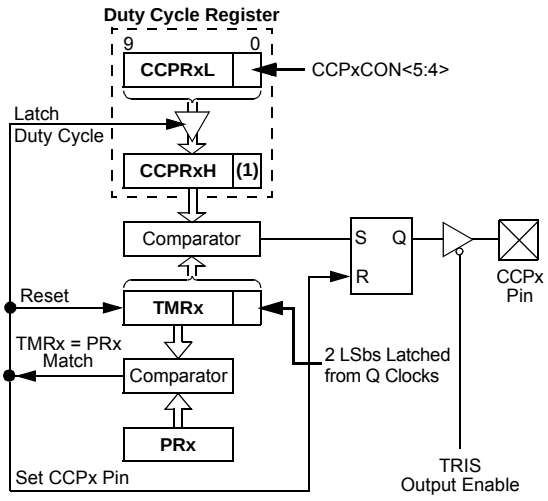

Note 1: The two LSbs of the Duty Cycle register are held by a 2-bit latch that is part of the module's hardware. It is physically separate from the CCPRx registers.

A PWM output (Figure 18-4) has a time base (period) and a time that the output stays high (duty cycle). The frequency of the PWM is the inverse of the period (1/period).

FIGURE 18-4: PWM OUTPUT

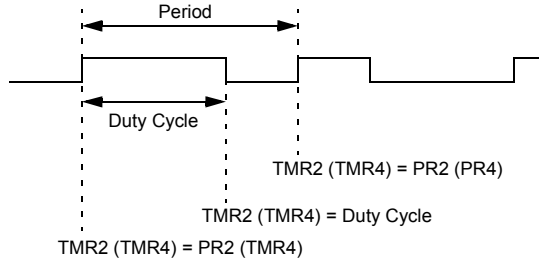

18.4.1 PWM PERIOD

The PWM period is specified by writing to the PR2 (PR4) register. The PWM period can be calculated using Equation 18-1:

EQUATION 18-1:

$$\text{PWM Period} = [(\text{PR2}) + 1] \cdot 4 \cdot T_{OSC} \cdot (\text{TMR2 Prescale Value})$$

PWM frequency is defined as 1/[PWM period].

When TMR2 (TMR4) is equal to PR2 (PR4), the following three events occur on the next increment cycle:

- TMR2 (TMR4) is cleared
- The CCPx pin is set (exception: if PWM Duty Cycle = 0%, the CCPx pin will not be set)
- The PWM duty cycle is latched from CCPRxL into CCPRxH

Note: The Timer2 and Timer 4 postscalers (see **Section 15.0 "Timer3 Module"** and **Section 16.0 "Timer4 Module"**) are not used in the determination of the PWM frequency. The postscaler could be used to have a servo update rate at a different frequency than the PWM output.

18.4.2 PWM DUTY CYCLE

The PWM duty cycle is specified by writing to the CCPRxL register and to the CCPxCON<5:4> bits. Up to 10-bit resolution is available. The CCPRxL contains the eight MSbs and the CCPxCON<5:4> contains the two LSbs. This 10-bit value is represented by CCPRxL:CCPxCON<5:4>. Equation 18-2 is used to calculate the PWM duty cycle in time.

EQUATION 18-2:

$$\text{PWM Duty Cycle} = (\text{CCPRxL:CCPxCON<5:4>}) \cdot T_{OSC} \cdot (\text{TMR2 Prescale Value})$$

CCPRxL and CCPxCON<5:4> can be written to at any time, but the duty cycle value is not latched into CCPRxH until after a match between PR2 (PR4) and TMR2 (TMR4) occurs (i.e., the period is complete). In PWM mode, CCPRxH is a read-only register.

© 2011 Microchip Technology Inc.

The CCPRxH register and a 2-bit internal latch are used to double-buffer the PWM duty cycle. This double-buffering is essential for glitchless PWM operation.

When the CCPRxH and 2-bit latch match TMR2 (TMR4), concatenated with an internal 2-bit Q clock or 2 bits of the TMR2 (TMR4) prescaler, the CCPx pin is cleared.

The maximum PWM resolution (bits) for a given PWM frequency is given by Equation 18-3:

EQUATION 18-3:

$$\text{PWM Resolution (max)} = \frac{\log\left(\frac{FOSC}{FPWM}\right)}{\log(2)} \text{ bits}$$

Note: If the PWM duty cycle value is longer than the PWM period, the CCPx pin will not be cleared.

18.4.3 SETUP FOR PWM OPERATION

The following steps should be taken when configuring the CCP module for PWM operation:

1. Set the PWM period by writing to the PR2 (PR4) register.
2. Set the PWM duty cycle by writing to the CCPRxL register and CCPxCON<5:4> bits.
3. Make the CCPx pin an output by clearing the appropriate TRIS bit.
4. Set the TMR2 (TMR4) prescale value, then enable Timer2 (Timer4) by writing to T2CON (T4CON).
5. Configure the CCPx module for PWM operation.

TABLE 18-2: EXAMPLE PWM FREQUENCIES AND RESOLUTIONS AT 40 MHz

PWM Frequency	2.44 kHz	9.77 kHz	39.06 kHz	156.25 kHz	312.50 kHz	416.67 kHz
Timer Prescaler (1, 4, 16)	16	4	1	1	1	1
PR2 Value	FFh	FFh	FFh	3Fh	1Fh	17h
Maximum Resolution (bits)	10	10	10	8	7	6.58

TABLE 18-3: REGISTERS ASSOCIATED WITH PWM, TIMER2 AND TIMER4

Name	Bit 7	Bit 6	Bit 5	Bit 4	Bit 3	Bit 2	Bit 1	Bit 0	Reset Values on Page:
INTCON	GIE/GIEH	PEIE/GIEL	TMR0IE	INT0IE	RBIE	TMR0IF	INT0IF	RBIF	69
RCON	IPEN	—	$\overline{CM}$	$\overline{RI}$	$\overline{TO}$	$\overline{PD}$	$\overline{POR}$	$\overline{BOR}$	70
PIR1	PMPIF	ADIF	RC1IF	TX1IF	SSP1IF	CCP1IF	TMR2IF	TMR1IF	72
PIE1	PMPIE	ADIE	RC1IE	TX1IE	SSP1IE	CCP1IE	TMR2IE	TMR1IE	72
IPR1	PMPIP	ADIP	RC1IP	TX1IP	SSP1IP	CCP1IP	TMR2IP	TMR1IP	72
PIR3	SSP2IF	BCL2IF	RC2IF	TX2IF	TMR4IF	CTMUIF	TMR3GIF	RTCCIF	72
PIE3	SSP2IE	BCL2IE	RC2IE	TX2IE	TMR4IE	CTMUIE	TMR3GIE	RTCCIE	72
IPR3	SSP2IP	BCL2IP	RC2IP	TX2IP	TMR4IP	CTMUIP	TMR3GIP	RTCCIP	72
IPR2	OSCFIP	CM2IP	CM1IP	USBIP	BCL1IP	LVDIP	TMR3IP	CCP2IP	72
PIR2	OSCFIF	CM2IF	CM1IF	USBIF	BCL1IF	LVDIF	TMR3IF	CCP2IF	72
PIE2	OSCFIE	CM2IE	CM1IE	USBIE	BCL1IE	LVDIE	TMR3IE	CCP2IE	72
TCLKCON	—	—	—	T1RUN	—	—	T3CCP2	T3CCP1	74
TMR2	Timer2 Register								70
PR2	Timer2 Period Register								70
T2CON	—	T2OUTPS3	T2OUTPS2	T2OUTPS1	T2OUTPS0	TMR2ON	T2CKPS1	T2CKPS0	70
TMR4	Timer4 Register								73
PR4	Timer4 Period Register								73
T4CON	—	T4OUTPS3	T4OUTPS2	T4OUTPS1	T4OUTPS0	TMR4ON	T4CKPS1	T4CKPS0	73
CCPR1L	Capture/Compare/PWM Register 1 Low Byte								71
CCPR1H	Capture/Compare/PWM Register 1 High Byte								71
CCPRL2L	Capture/Compare/PWM Register 2 Low Byte								71
CCPR2H	Capture/Compare/PWM Register 2 High Byte								71
CCP1CON	P1M1	P1M0	DC1B1	DC1B0	CCP1M3	CCP1M2	CCP1M1	CCP1M0	73
CCP2CON	P2M1	P2M0	DC2B1	DC2B0	CCP2M3	CCP2M2	CCP2M1	CCP2M0	73
ODCON1	—	—	—	—	—	—	ECCP2OD	ECCP1OD	74

Legend: — = unimplemented, read as '0'. Shaded cells are not used by PWM, Timer2 or Timer4.

© 2011 Microchip Technology Inc.

18.5 PWM (Enhanced Mode)

The Enhanced PWM mode can generate a PWM signal on up to four different output pins with up to 10 bits of resolution. It can do this through four different PWM Output modes:

- Single PWM
- Half-Bridge PWM
- Full-Bridge PWM, Forward mode
- Full-Bridge PWM, Reverse mode

To select an Enhanced PWM mode, the PxM bits of the CCPxCON register must be set appropriately.

The PWM outputs are multiplexed with I/O pins and are designated: PxA, PxB, PxC and PxD. The polarity of the PWM pins is configurable and is selected by setting the CCPxM bits in the CCPxCON register appropriately.

Table 18-1 provides the pin assignments for each Enhanced PWM mode.

Figure 18-5 provides an example of a simplified block diagram of the Enhanced PWM module.

Note: To prevent the generation of an incomplete waveform when the PWM is first enabled, the ECCP module waits until the start of a new PWM period before generating a PWM signal.

FIGURE 18-5: EXAMPLE SIMPLIFIED BLOCK DIAGRAM OF THE ENHANCED PWM MODE

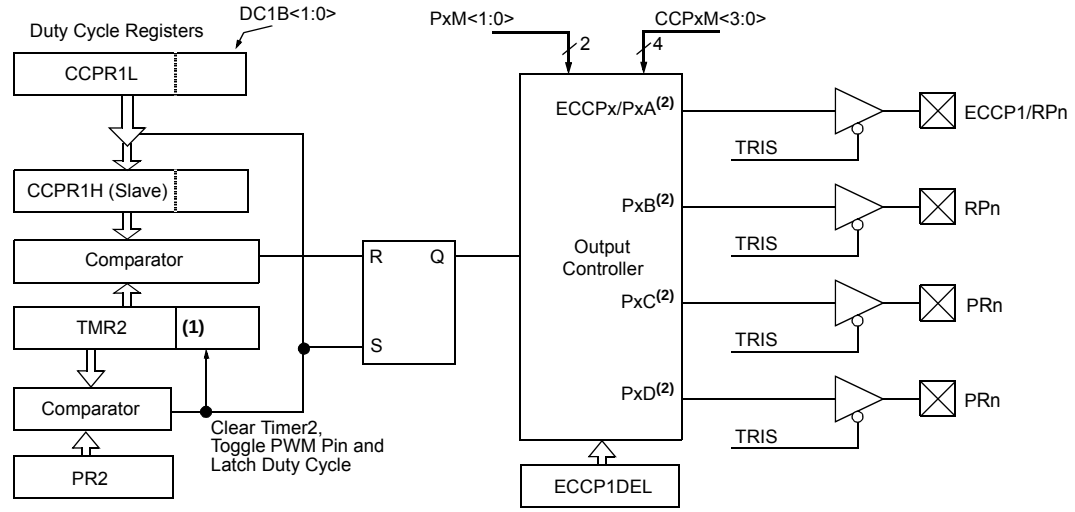

Note 1: The 8-bit TMR2 register is concatenated with the 2-bit internal Q clock, or 2 bits of the prescaler, to create the 10-bit time base.

2: These pins are remappable.

Note 1: The TRIS register value for each PWM output must be configured appropriately.

2: Any pin not used by an Enhanced PWM mode is available for alternate pin functions.

TABLE 18-4: EXAMPLE PIN ASSIGNMENTS FOR VARIOUS PWM ENHANCED MODES

ECCP Mode	PxM<1:0>	PxA	PxB	PxC	PxD
Single	00	Yes(1)	Yes(1)	Yes(1)	Yes(1)
Half-Bridge	10	Yes	Yes	No	No
Full-Bridge, Forward	01	Yes	Yes	Yes	Yes
Full-Bridge, Reverse	11	Yes	Yes	Yes	Yes

Note 1: Outputs are enabled by pulse steering in Single mode (see Register 18-4).

FIGURE 18-6: EXAMPLE PWM (ENHANCED MODE) OUTPUT RELATIONSHIPS (ACTIVE-HIGH STATE)

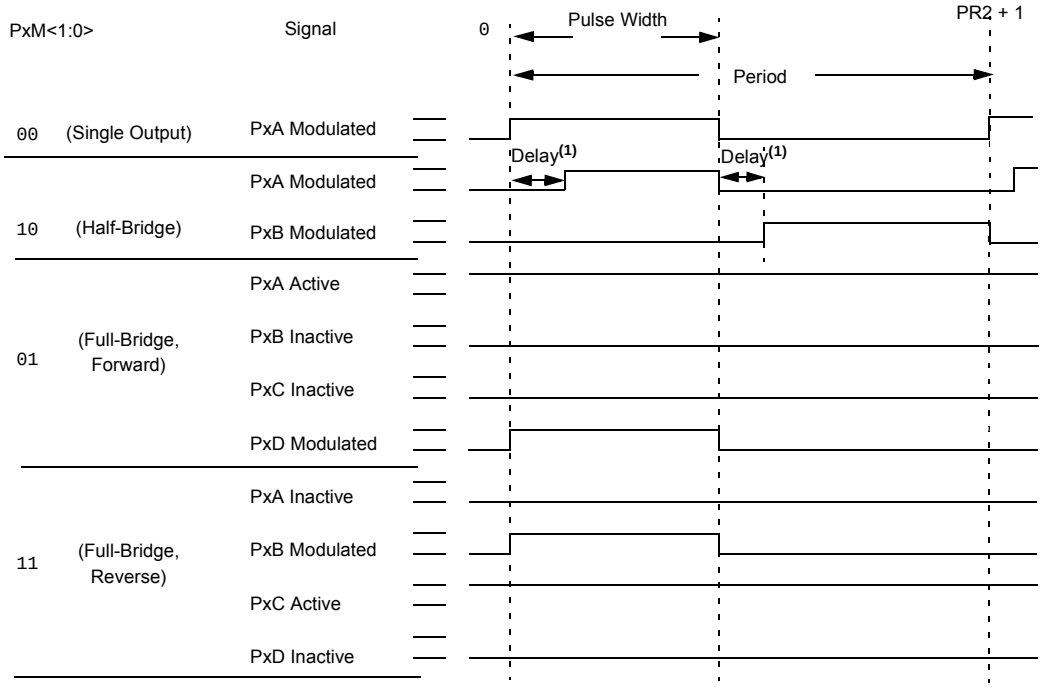

Relationships:
- Period = 4 * Tosc * (PR2 + 1) * (TMR2 Prescale Value)
- Pulse Width = Tosc * (CCPRxL<7:0>:CCPxCON<5:4>) * (TMR2 Prescale Value)
- Delay = 4 * Tosc * (ECCPxDEL<6:0>)

Note 1: Dead-band delay is programmed using the ECCPxDEL register (**Section 18.5.6 "Programmable Dead-Band Delay Mode"**).

© 2011 Microchip Technology Inc.

FIGURE 18-7: EXAMPLE ENHANCED PWM OUTPUT RELATIONSHIPS (ACTIVE-LOW STATE)

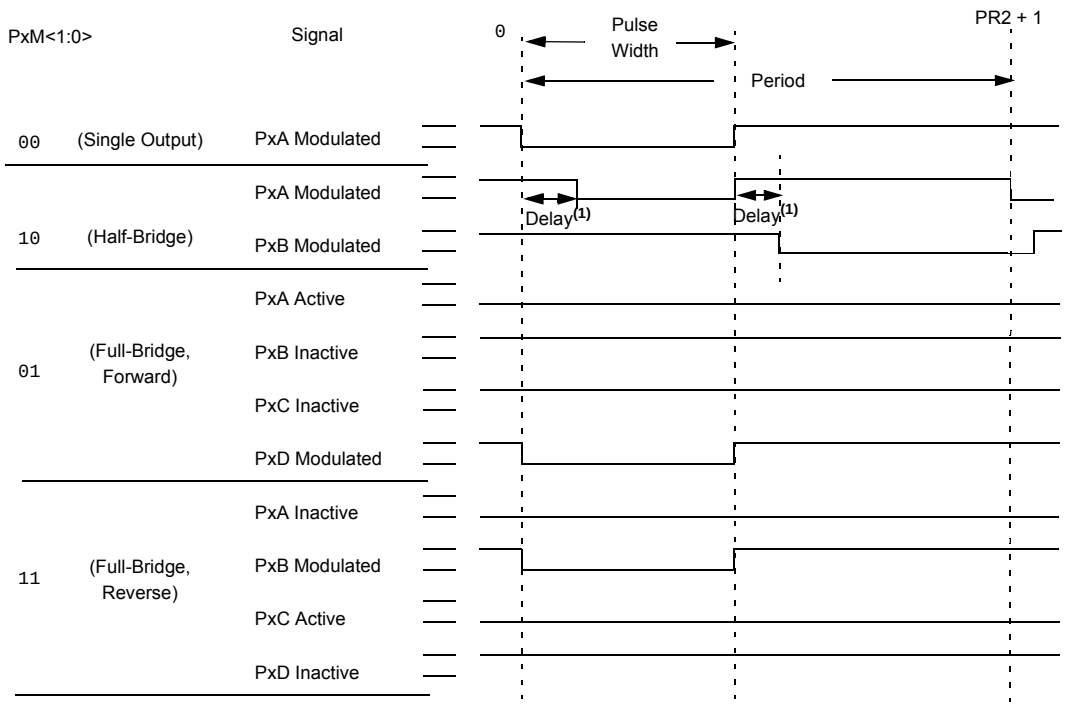

Relationships:

- Period = 4 * TOSC * (PR2 + 1) * (TMR2 Prescale Value)
- Pulse Width = TOSC * (CCPRxL<7:0>:CCPxCON<5:4>) * (TMR2 Prescale Value)
- Delay = 4 * TOSC * (ECCPxDEL<6:0>)

Note 1: Dead-band delay is programmed using the ECCP1DEL register (**Section 18.5.6 "Programmable Dead-Band Delay Mode"**).

18.5.1 HALF-BRIDGE MODE

In Half-Bridge mode, two pins are used as outputs to drive push-pull loads. The PWM output signal is output on the PxA pin, while the complementary PWM output signal is output on the PxB pin (see Figure 18-8). This mode can be used for half-bridge applications, as shown in Figure 18-9, or for full-bridge applications, where four power switches are being modulated with two PWM signals.

In Half-Bridge mode, the programmable dead-band delay can be used to prevent shoot-through current in half-bridge power devices. The value of the PxDC<6:0> bits of the ECCPxDEL register sets the number of instruction cycles before the output is driven active. If the value is greater than the duty cycle, the corresponding output remains inactive during the entire cycle. See **Section 18.5.6 "Programmable Dead-Band Delay Mode"** for more details of the dead-band delay operations.

Since the PxA and PxB outputs are multiplexed with the port data latches, the associated TRIS bits must be cleared to configure PxA and PxB as outputs.

FIGURE 18-8: EXAMPLE OF HALF-BRIDGE PWM OUTPUT

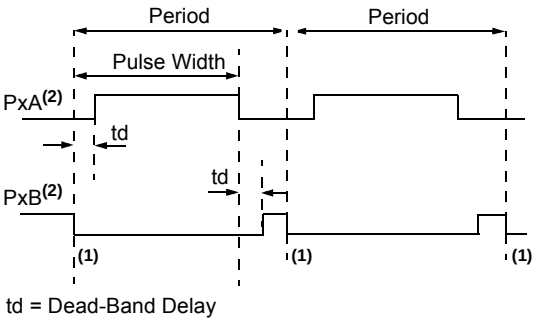

Note 1: At this time, the TMR2 register is equal to the PR2 register.

2: Output signals are shown as active-high.

FIGURE 18-9: EXAMPLE OF HALF-BRIDGE APPLICATIONS

Standard Half-Bridge Circuit ("Push-Pull")

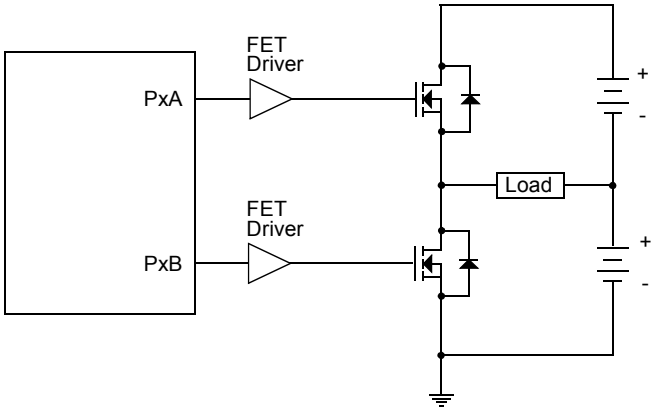

Half-Bridge Output Driving a Full-Bridge Circuit

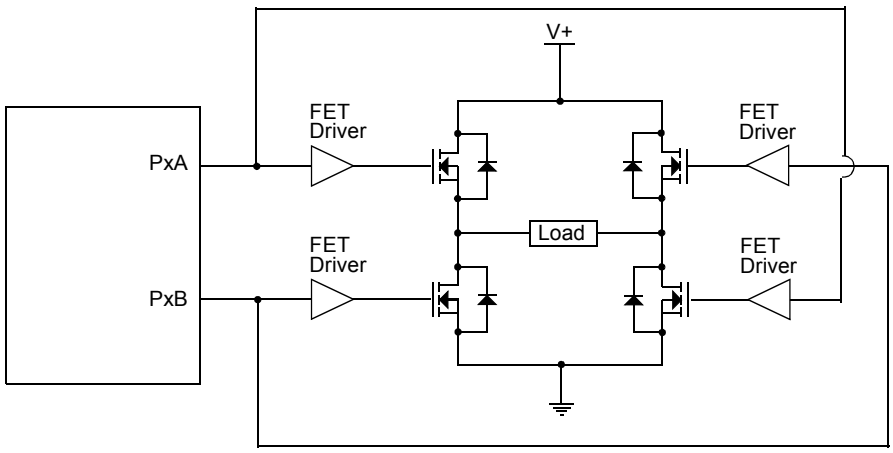

© 2011 Microchip Technology Inc.

18.5.2 FULL-BRIDGE MODE

In Full-Bridge mode, all four pins are used as outputs. An example of a full-bridge application is provided in Figure 18-10.

In the Forward mode, the PxA pin is driven to its active state, the PxD pin is modulated, while the PxB and PxC pins will be driven to their inactive state as provided in Figure 18-11.

In the Reverse mode, the PxC pin is driven to its active state, the PxB pin is modulated, while the PxA and PxD pins will be driven to their inactive state as provided Figure 18-11.

The PxA, PxB, PxC and PxD outputs are multiplexed with the port data latches. The associated TRIS bits must be cleared to configure the PxA, PxB, PxC and PxD pins as outputs.

FIGURE 18-10: EXAMPLE OF FULL-BRIDGE APPLICATION

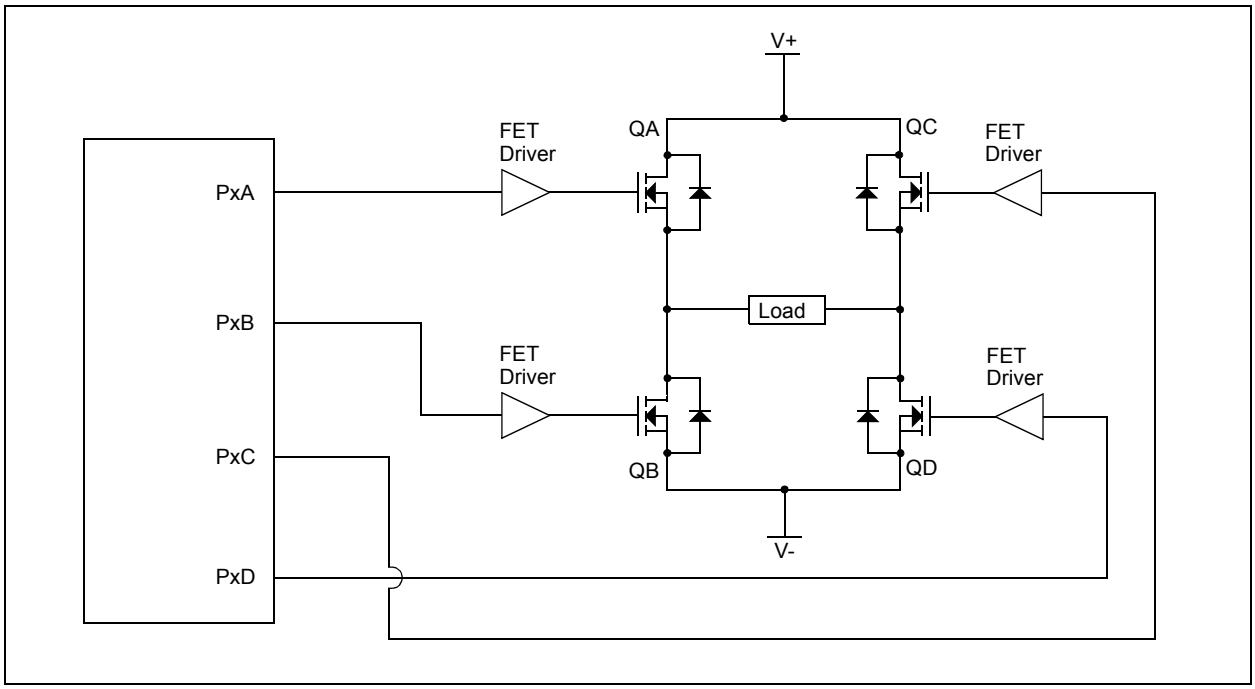

FIGURE 18-11: EXAMPLE OF FULL-BRIDGE PWM OUTPUT

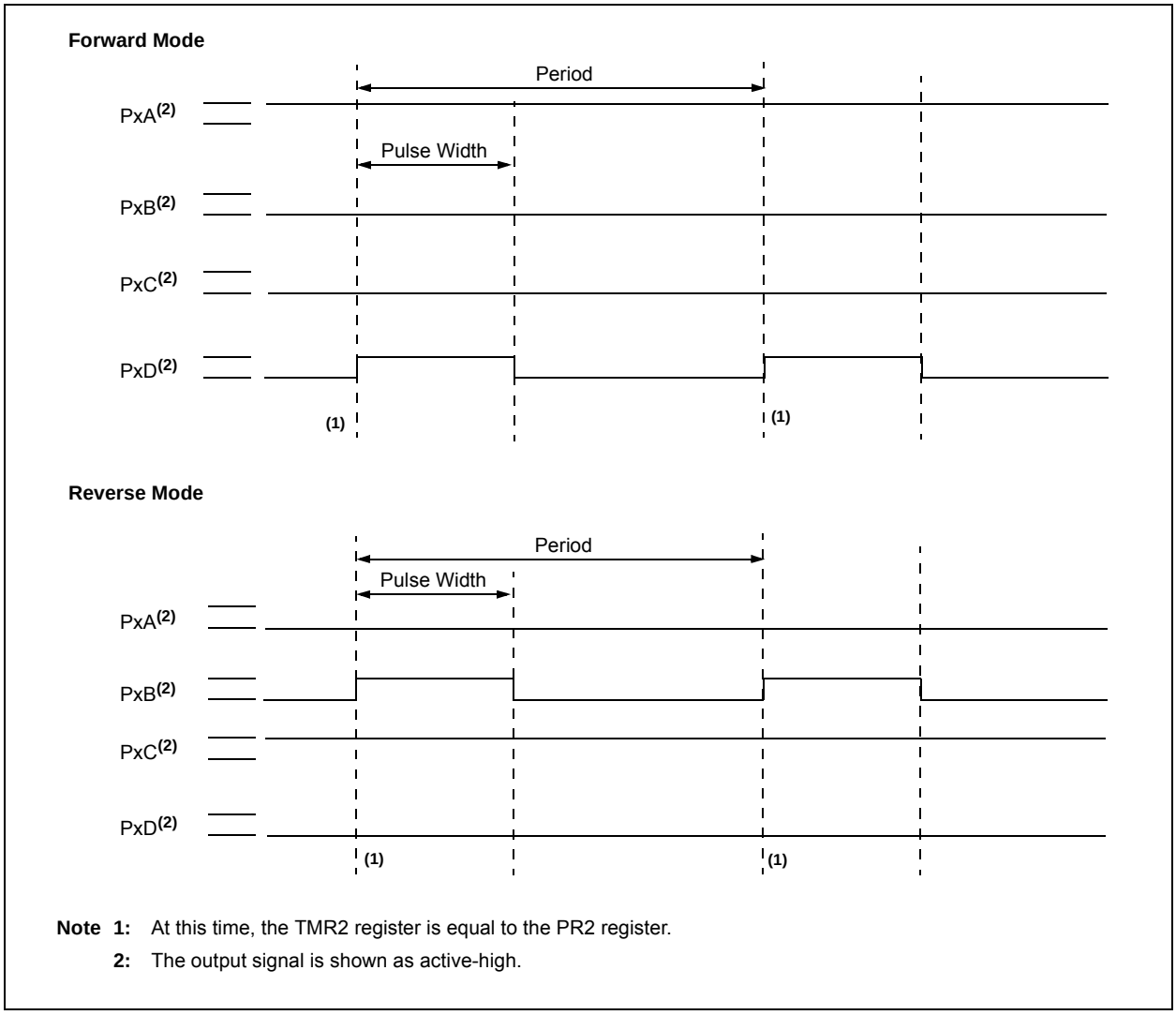

Note 1: At this time, the TMR2 register is equal to the PR2 register.

2: The output signal is shown as active-high.

© 2011 Microchip Technology Inc.

18.5.2.1 Direction Change in Full-Bridge Mode

In the Full-Bridge mode, the PxM1 bit in the CCPxCON register allows users to control the forward/reverse direction. When the application firmware changes this direction control bit, the module will change to the new direction on the next PWM cycle.

A direction change is initiated in software by changing the PxM1 bit of the CCPxCON register. The following sequence occurs prior to the end of the current PWM period:

- The modulated outputs (PxB and PxD) are placed in their inactive state.
- The associated unmodulated outputs (PxA and PxC) are switched to drive in the opposite direction.
- PWM modulation resumes at the beginning of the next period.

See Figure 18-12 for an illustration of this sequence.

The Full-Bridge mode does not provide a dead-band delay. As one output is modulated at a time, a dead-band delay is generally not required. There is a situation where a dead-band delay is required. This situation occurs when both of the following conditions are true:

1. The direction of the PWM output changes when the duty cycle of the output is at or near 100%.
2. The turn-off time of the power switch, including the power device and driver circuit, is greater than the turn-on time.

Figure 18-13 shows an example of the PWM direction changing from forward to reverse, at a near 100% duty cycle. In this example, at time, t1, the PxA and PxD outputs become inactive, while the PxC output becomes active. Since the turn-off time of the power devices is longer than the turn-on time, a shoot-through current will flow through power devices, QC and QD (see Figure 18-10), for the duration of 't'. The same phenomenon will occur to power devices, QA and QB, for PWM direction change from reverse to forward.

If changing PWM direction at high duty cycle is required for an application, two possible solutions for eliminating the shoot-through current are:

1. Reduce PWM duty cycle for one PWM period before changing directions.
2. Use switch drivers that can drive the switches off faster than they can drive them on.

Other options to prevent shoot-through current may exist.

FIGURE 18-12: EXAMPLE OF PWM DIRECTION CHANGE

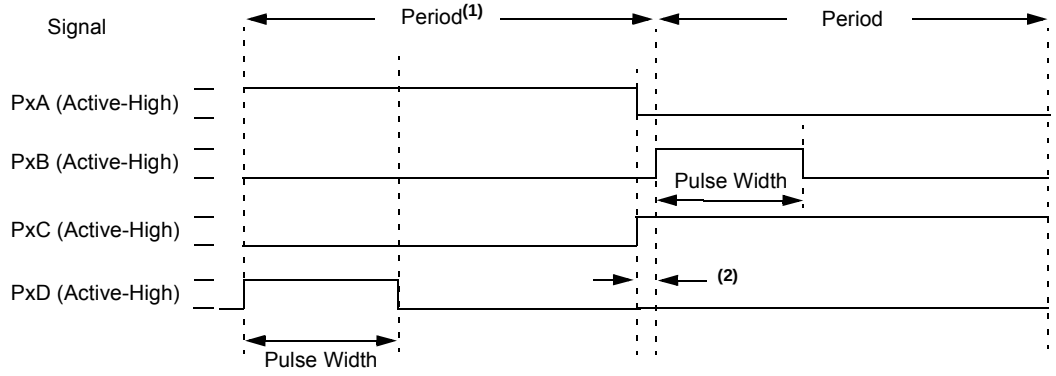

Note 1: The direction bit, PxM1 of the CCPxCON register, is written any time during the PWM cycle.

2: When changing directions, the PxA and PxC signals switch before the end of the current PWM cycle. The modulated PxB and PxD signals are inactive at this time. The length of this time is: (1/FOSC) • TMR2 Prescale Value

FIGURE 18-13: EXAMPLE OF PWM DIRECTION CHANGE AT NEAR 100% DUTY CYCLE

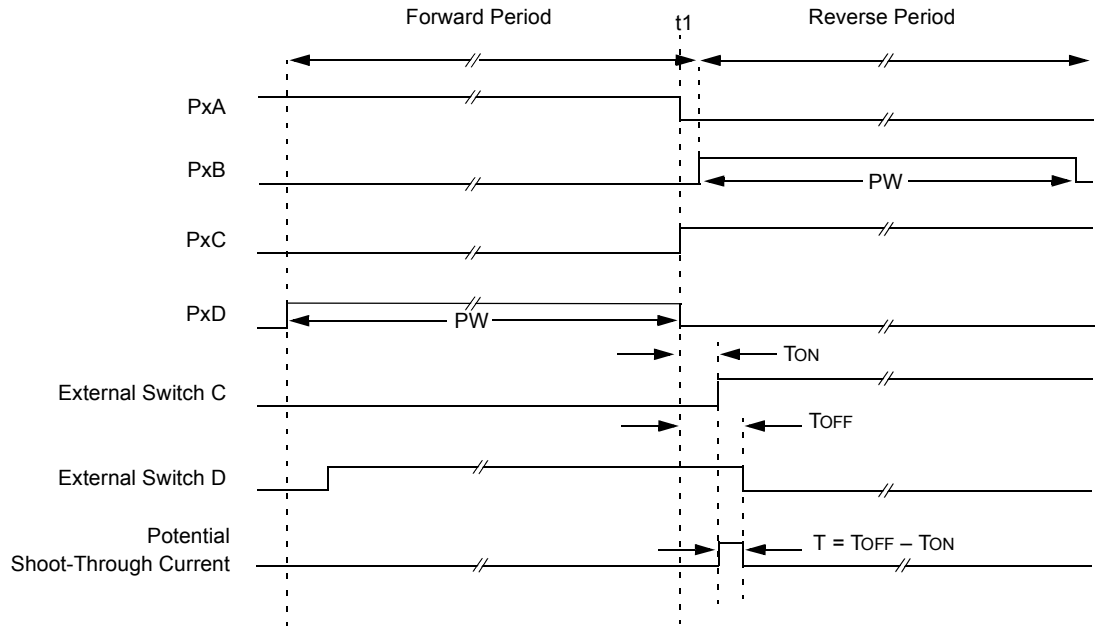

Note 1: All signals are shown as active-high.

2: TON is the turn-on delay of power switch, QC, and its driver.

3: TOFF is the turn-off delay of power switch, QD, and its driver.

18.5.3 START-UP CONSIDERATIONS

When any PWM mode is used, the application hardware must use the proper external pull-up and/or pull-down resistors on the PWM output pins.

Note:	When the microcontroller is released from Reset, all of the I/O pins are in the high-impedance state. The external circuits must keep the power switch devices in the OFF state until the microcontroller drives the I/O pins with the proper signal levels or activates the PWM output(s).

The CCPxM<1:0> bits of the CCPxCON register allow the user to choose whether the PWM output signals are active-high or active-low for each pair of PWM output pins (PxA/PxC and PxB/PxD). The PWM output polarities must be selected before the PWM pin output drivers are enabled. Changing the polarity configuration while the PWM pin output drivers are enable is not recommended since it may result in damage to the application circuits.

The PxA, PxB, PxC and PxD output latches may not be in the proper states when the PWM module is initialized. Enabling the PWM pin output drivers at the same time as the Enhanced PWM modes may cause damage to the application circuit. The Enhanced PWM modes must be enabled in the proper Output mode and complete a full PWM cycle before enabling the PWM pin output drivers. The completion of a full PWM cycle is indicated by the TMR2IF or TMR4IF bit of the PIR1 or PIR3 register being set as the second PWM period begins.

© 2011 Microchip Technology Inc.

18.5.4 ENHANCED PWM AUTO-SHUTDOWN MODE

The PWM mode supports an Auto-Shutdown mode that will disable the PWM outputs when an external shutdown event occurs. Auto-Shutdown mode places the PWM output pins into a predetermined state. This mode is used to help prevent the PWM from damaging the application.

The auto-shutdown sources are selected using the ECCPxAS<2:0> bits of the ECCPxAS register. A shutdown event may be generated by:

- A logic '0' on the pin that is assigned the FLT0 input function
- Comparator C1
- Comparator C2
- Setting the ECCPxASE bit in firmware

A shutdown condition is indicated by the ECCPxASE (Auto-Shutdown Event Status) bit of the ECCPxAS register. If the bit is a '0', the PWM pins are operating normally. If the bit is a '1', the PWM outputs are in the shutdown state.

When a shutdown event occurs, two things happen:

The ECCPxASE bit is set to '1'. The ECCPxASE will remain set until cleared in firmware or an auto-restart occurs (see **Section 18.5.5 "Auto-Restart Mode"**).

The enabled PWM pins are asynchronously placed in their shutdown states. The PWM output pins are grouped into pairs, [PxA/PxC] and [PxB/PxD]. The state of each pin pair is determined by the PSSxAC and PSSxBD bits of the ECCPxAS register. Each pin pair may be placed into one of three states:

- Drive logic '1'
- Drive logic '0'
- Tri-state (high-impedance)

REGISTER 18-2: ECCPxAS: ECCPx AUTO-SHUTDOWN CONTROL REGISTER (ACCESS FBEh, FB8h)

R/W-0	R/W-0	R/W-0	R/W-0	R/W-0	R/W-0	R/W-0	R/W-0
ECCPxASE	ECCPxAS2	ECCPxAS1	ECCPxAS0	PSSxAC1	PSSxAC0	PSSxBD1	PSSxBD0
bit 7							bit 0

Legend:			
R = Readable bit	W = Writable bit	U = Unimplemented bit, read as '0'	
-n = Value at POR	'1' = Bit is set	'0' = Bit is cleared	x = Bit is unknown

bit 7 **ECCPxASE:** ECCP Auto-Shutdown Event Status bit
1 = A shutdown event has occurred; ECCP outputs are in a shutdown state
0 = ECCP outputs are operating

bit 6-4 **ECCPxAS<2:0>:** ECCP Auto-Shutdown Source Select bits
000 = Auto-shutdown is disabled
001 = Comparator C1OUT output is high
010 = Comparator C2OUT output is high
011 = Either Comparator C1OUT or C2OUT is high
100 = VIL on FLT0 pin
101 = VIL on FLT0 pin or Comparator C1OUT output is high
110 = VIL on FLT0 pin or Comparator C2OUT output is high
111 = VIL on FLT0 pin or Comparator C1OUT or Comparator C2OUT is high

bit 3-2 **PSSxAC<1:0>:** Pins PxA and PxC Shutdown State Control bits
00 = Drive PxA and PxC pins to '0'
01 = Drive PxA and PxC pins to '1'
1x = PxA and PxC pins tri-state

bit 1-0 **PSSxBD<1:0>:** Pins PxB and PxD Shutdown State Control bits
00 = Drive PxB and PxD pins to '0'
01 = Drive PxB and PxD pins to '1'
1x = PxB and PxD pins tri-state

Note 1: The auto-shutdown condition is a level-based signal, not an edge-based signal. As long as the level is present, the auto-shutdown will persist.
2: Writing to the ECCPxASE bit is disabled while an auto-shutdown condition persists.
3: Once the auto-shutdown condition has been removed and the PWM restarted (either through firmware or auto-restart), the PWM signal will always restart at the beginning of the next PWM period.

FIGURE 18-14: PWM AUTO-SHUTDOWN WITH FIRMWARE RESTART (PxRSEN = 0)

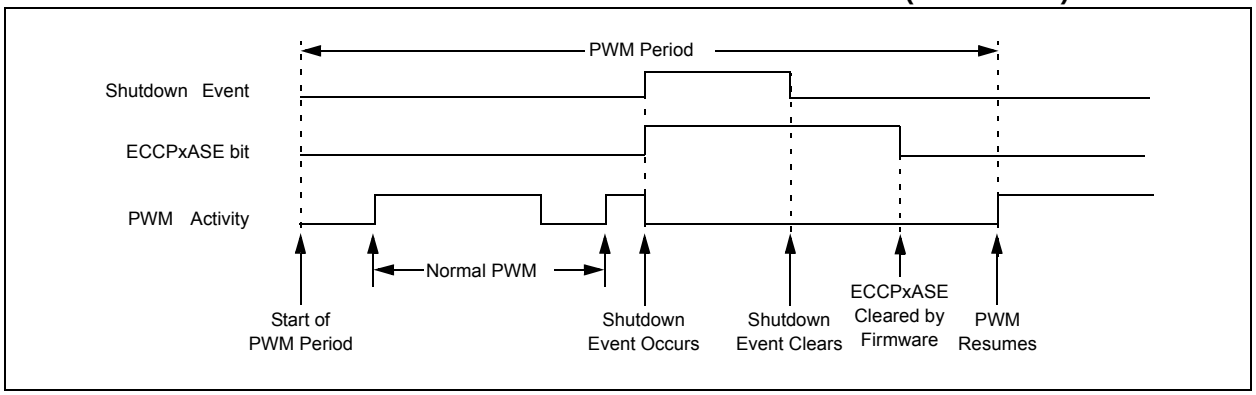

18.5.5 AUTO-RESTART MODE

The Enhanced PWM can be configured to automatically restart the PWM signal once the auto-shutdown condition has been removed. Auto-restart is enabled by setting the PxRSEN bit in the ECCPxDEL register.

If auto-restart is enabled, the ECCPxASE bit will remain set as long as the auto-shutdown condition is active. When the auto-shutdown condition is removed, the ECCPxASE bit will be cleared via hardware and normal operation will resume.

The module will wait until the next PWM period begins, however, before re-enabling the output pin. This behavior allows the auto-shutdown with auto-restart features to be used in applications based on current mode PWM control.

FIGURE 18-15: PWM AUTO-SHUTDOWN WITH AUTO-RESTART ENABLED (PxRSEN = 1)

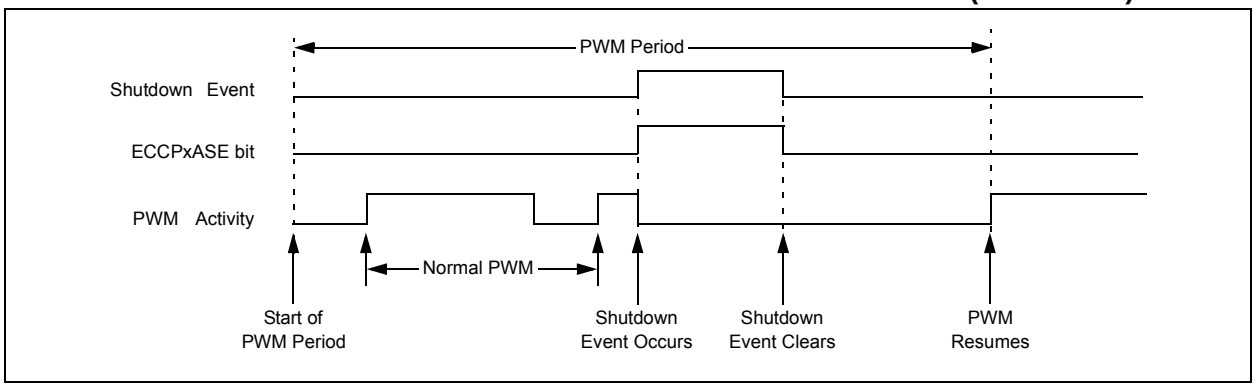

© 2011 Microchip Technology Inc.

18.5.6 PROGRAMMABLE DEAD-BAND DELAY MODE

In half-bridge applications, where all power switches are modulated at the PWM frequency, the power switches normally require more time to turn off than to turn on. If both the upper and lower power switches are switched at the same time (one turned on and the other turned off), both switches may be on for a short period until one switch completely turns off. During this brief interval, a very high current (shoot-through current) will flow through both power switches, shorting the bridge supply. To avoid this potentially destructive shoot-through current from flowing during switching, turning on either of the power switches is normally delayed to allow the other switch to completely turn off.

In Half-Bridge mode, a digitally, programmable dead-band delay is available to avoid shoot-through current from destroying the bridge power switches. The delay occurs at the signal transition from the non-active state to the active state. See Figure 18-16 for illustration. The lower seven bits of the associated ECCPxDEL register (Register 18-3) set the delay period in terms of microcontroller instruction cycles (TCY or 4 TOSC).

FIGURE 18-16: EXAMPLE OF HALF-BRIDGE PWM OUTPUT

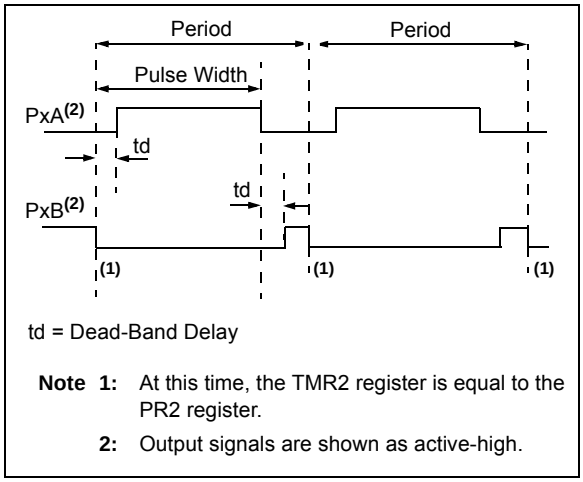

td = Dead-Band Delay

Note 1: At this time, the TMR2 register is equal to the PR2 register.

2: Output signals are shown as active-high.

FIGURE 18-17: EXAMPLE OF HALF-BRIDGE APPLICATIONS

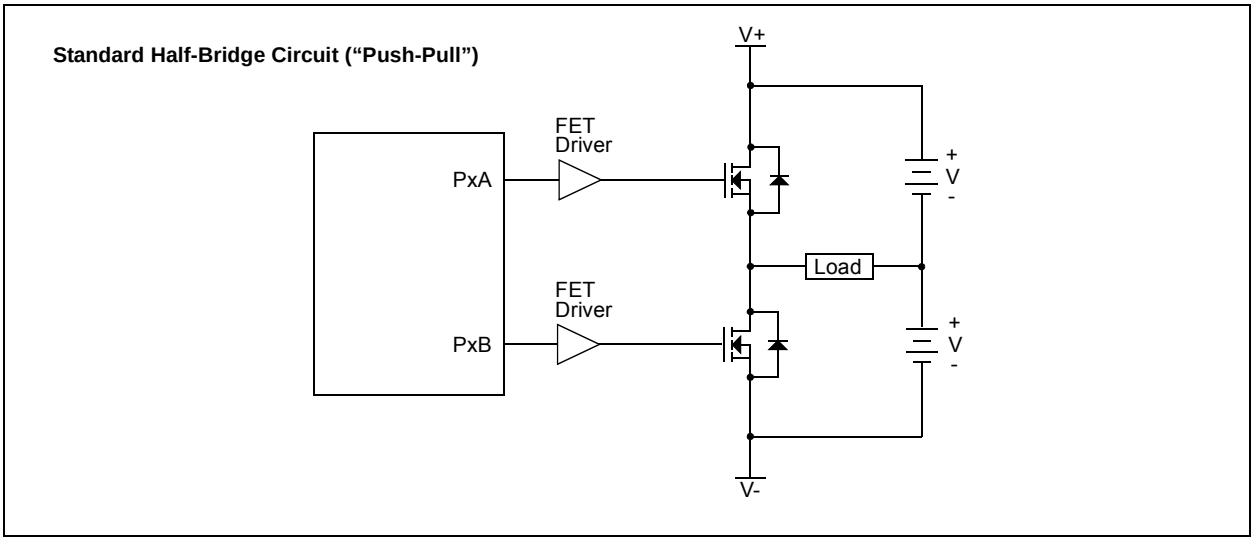

REGISTER 18-3: ECCPxDEL: ENHANCED PWM CONTROL REGISTER (ACCESS FBDh, FB7h)

R/W-0	R/W-0	R/W-0	R/W-0	R/W-0	R/W-0	R/W-0	R/W-0
PxRSEN	PxDC6	PxDC5	PxDC4	PxDC3	PxDC2	PxDC1	PxDC0
bit 7							bit 0

Legend:			
R = Readable bit	W = Writable bit	U = Unimplemented bit, read as '0'	
-n = Value at POR	'1' = Bit is set	'0' = Bit is cleared	x = Bit is unknown

bit 7 **PxRSEN:** PWM Restart Enable bit

1 = Upon auto-shutdown, the ECCPxASE bit clears automatically once the shutdown event goes away; the PWM restarts automatically

0 = Upon auto-shutdown, ECCPxASE must be cleared by software to restart the PWM

bit 6-0 **PxDC<6:0>:** PWM Delay Count bits

PxDCn = Number of FOSC/4 (4 * TOSC) cycles between the scheduled time when a PWM signal **should** transition active and the **actual** time it transitions active.

18.5.7 PULSE STEERING MODE

In Single Output mode, pulse steering allows any of the PWM pins to be the modulated signal. Additionally, the same PWM signal can simultaneously be available on multiple pins.

Once the Single Output mode is selected (CCPxM<3:2> = 11 and PxM<1:0> = 00 of the CCPxCON register), the user firmware can bring out the same PWM signal to one, two, three or four output pins by setting the appropriate STR<D:A> bits of the PSTRxCON register, as provided in Table 18-4.

Note:	The associated TRIS bits must be set to output ('0') to enable the pin output driver in order to see the PWM signal on the pin.

While the PWM Steering mode is active, the CCPxM<1:0> bits of the CCPxCON register select the PWM output polarity for the Px<D:A> pins.

The PWM auto-shutdown operation also applies to PWM Steering mode, as described in **Section 18.5.4 "Enhanced PWM Auto-Shutdown Mode"**. An auto-shutdown event will only affect pins that have PWM outputs enabled.

© 2011 Microchip Technology Inc.

REGISTER 18-4: PSTRxCON: PULSE STEERING CONTROL REGISTER (ACCESS FBFh, FB9h)(1)

R/W-0	R/W-0	U-0	R/W-0	R/W-0	R/W-0	R/W-0	R/W-1
CMPL1	CMPL0	—	STRSYNC	STRD	STRC	STRB	STRA
bit 7							bit 0

Legend:			
R = Readable bit	W = Writable bit	U = Unimplemented bit, read as '0'	
-n = Value at POR	'1' = Bit is set	'0' = Bit is cleared	x = Bit is unknown

bit 7-6 **CMPL<1:0>:** Complementary Mode Output Assignment Steering Sync bits
1 = Modulated output pin toggles between PxA and PxB for each period
0 = Complementary output assignment disabled; STR<D:A> bits are used to determine Steering mode

bit 5 **Unimplemented:** Read as '0'

bit 4 **STRSYNC:** Steering Sync bit
1 = Output steering update occurs on next PWM period
0 = Output steering update occurs at the beginning of the instruction cycle boundary

bit 3 **STRD:** Steering Enable bit D
1 = PxD pin has the PWM waveform with polarity control from CCPxM<1:0>
0 = PxD pin is assigned to port pin

bit 2 **STRC:** Steering Enable bit C
1 = PxC pin has the PWM waveform with polarity control from CCPxM<1:0>
0 = PxC pin is assigned to port pin

bit 1 **STRB:** Steering Enable bit B
1 = PxB pin has the PWM waveform with polarity control from CCPxM<1:0>
0 = PxB pin is assigned to port pin

bit 0 **STRA:** Steering Enable bit A
1 = PxA pin has the PWM waveform with polarity control from CCPxM<1:0>
0 = PxA pin is assigned to port pin

Note 1: The PWM Steering mode is available only when the CCPxCON register bits, CCPxM<3:2> = 11, and PxM<1:0> = 00.

FIGURE 18-18: SIMPLIFIED STEERING BLOCK DIAGRAM

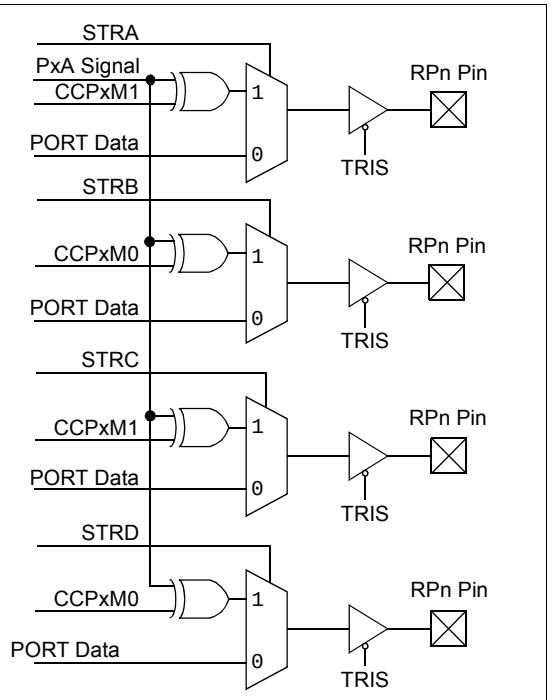

Note 1: Port outputs are configured as displayed when the CCPxCON register bits, PxM<1:0> = 00 and CCPxM<3:2> = 11.

2: Single PWM output requires setting at least one of the STRx bits.

18.5.7.1 Steering Synchronization

The STRSYNC bit of the PSTRxCON register gives the user two selections of when the steering event will happen. When the STRSYNC bit is '0', the steering event will happen at the end of the instruction that writes to the PSTRxCON register. In this case, the output signal at the Px<D:A> pins may be an incomplete PWM waveform. This operation is useful when the user firmware needs to immediately remove a PWM signal from the pin.

When the STRSYNC bit is '1', the effective steering update will happen at the beginning of the next PWM period. In this case, steering on/off the PWM output will always produce a complete PWM waveform.

Figures 18-19 and 18-20 illustrate the timing diagrams of the PWM steering depending on the STRSYNC setting.

FIGURE 18-19: EXAMPLE OF STEERING EVENT AT END OF INSTRUCTION (STRSYNC = 0)

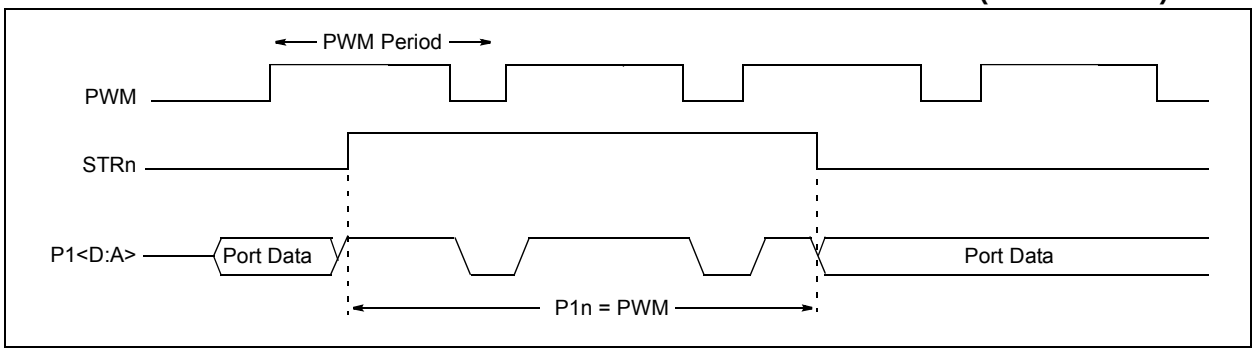

FIGURE 18-20: EXAMPLE OF STEERING EVENT AT BEGINNING OF INSTRUCTION (STRSYNC = 1)

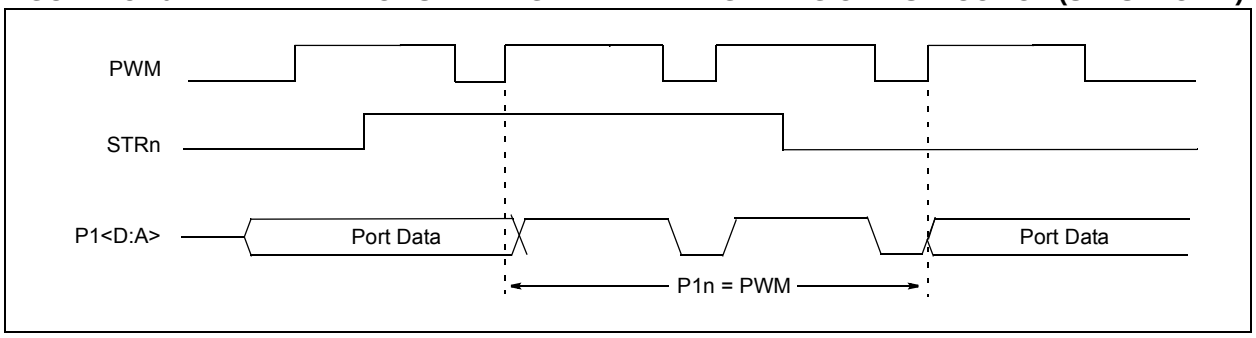

© 2011 Microchip Technology Inc.

18.5.8 OPERATION IN POWER-MANAGED MODES

In Sleep mode, all clock sources are disabled. Timer2 will not increment and the state of the module will not change. If the ECCPx pin is driving a value, it will continue to drive that value. When the device wakes up, it will continue from this state. If Two-Speed Start-ups are enabled, the initial start-up frequency from HFINTOSC and the postscaler may not be stable immediately.

In PRI_IDLE mode, the primary clock will continue to clock the ECCPx module without change.

18.5.8.1 Operation with Fail-Safe Clock Monitor (FSCM)

If the Fail-Safe Clock Monitor (FSCM) is enabled, a clock failure will force the device into the power-managed RC_RUN mode and the OSCFIF bit of the PIR2 register will be set. The ECCPx will then be clocked from the internal oscillator clock source, which may have a different clock frequency than the primary clock.

18.5.9 EFFECTS OF A RESET

Both Power-on Reset and subsequent Resets will force all PORTS to Input mode and the ECCP registers to their Reset states.

This forces the ECCP module to reset to a state compatible with previous, non-enhanced ECCP modules used on other PIC18 and PIC16 devices.

TABLE 18-5: REGISTERS ASSOCIATED WITH ECCP1 MODULE AND TIMER1 TO TIMER3

Name	Bit 7	Bit 6	Bit 5	Bit 4	Bit 3	Bit 2	Bit 1	Bit 0	Reset Values on Page:
INTCON	GIE/GIEH	PEIE/GIEL	TMR0IE	INT0IE	RABIE	TMR0IF	INT0IF	RABIF	87
RCON	IPEN	—	—	$\overline{RI}$	$\overline{TO}$	$\overline{PD}$	$\overline{POR}$	$\overline{BOR}$	90
PIR1	PMPIF(1)	ADIF	RCIF	TXIF	SSPIF	CCP1IF	TMR2IF	TMR1IF	87
PIE1	PMPIE(1)	ADIE	RCIE	TXIE	SSPIE	CCP1IE	TMR2IE	TMR1IE	91
IPR1	PMPIP(1)	ADIP	RCIP	TXIP	SSPIP	CCP1IP	TMR2IP	TMR1IP	91
PIR2	OSCFIF	CM2IF	CM1IF	USBIF	BCL1IF	HLVDIF	TMR3IF	CCP2IF	91
PIE2	OSCFIE	CM2IE	CM1IE	USBIE	BCL1IE	HLVDIE	TMR3IE	CCP2IE	91
IPR2	OSCFIP	CM2IP	CM1IP	USBIP	BCL1IP	HLVDIP	TMR3IP	CCP2IP	91
TCLKCON	—	—	—	T1RUN	—	—	T3CCP2	T3CCP1	93
TMR4	Timer4 Register								93
T4CON	—	T4OUTPS3	T4OUTPS2	T4OUTPS1	T4OUTPS0	TMR4ON	T4CKPS1	T4CKPS0	93
PR4	Timer4 Period Register								93
TMR1L	Timer1 Register Low Byte								87
TMR1H	Timer1 Register High Byte								87
T1CON	TMR1CS1	TMR1CS0	T1CKPS1	T1CKPS0	T1OSCEN	$\overline{T1SYNC}$	RD16	TMR1ON	87
TMR2	Timer2 Register								87
T2CON	—	T2OUTPS3	T2OUTPS2	T2OUTPS1	T2OUTPS0	TMR2ON	T2CKPS1	T2CKPS0	87
PR2	Timer2 Period Register								87
TMR3L	Timer3 Register Low Byte								87
TMR3H	Timer3 Register High Byte								87
T3CON	TMR3CS1	TMR3CS0	T3CKPS1	T3CKPS0	T3OSCEN	$\overline{T3SYNC}$	RD16	TMR3ON	87
CCPR1L	Capture/Compare/PWM Register 1 Low Byte								87
CCPR1H	Capture/Compare/PWM Register 1 High Byte								87
CCP1CON	P1M1	P1M0	DC1B1	DC1B0	CCP1M3	CCP1M2	CCP1M1	CCP1M0	87
ECCP1AS	ECCP1ASE	ECCP1AS2	ECCP1AS1	ECCP1AS0	PSS1AC1	PSS1AC0	PSS1BD1	PSS1BD0	87
ECCP1DEL	P1RSEN	P1DC6	P1DC5	P1DC4	P1DC3	P1DC2	P1DC1	P1DC0	264

Legend: — = unimplemented, read as '0'. Shaded cells are not used during ECCP operation.

Note 1: These bits are only available on 44-pin devices.

NOTES:

© 2011 Microchip Technology Inc.

19.0 MASTER SYNCHRONOUS SERIAL PORT (MSSP) MODULE

The Master Synchronous Serial Port (MSSP) module is a serial interface, useful for communicating with other peripheral or microcontroller devices. These peripheral devices include serial EEPROMs, shift registers, display drivers, ADCs, DACs and many other types of integrated circuits.

19.1 Master SSP (MSSP) Module Overview

The MSSP module can operate in one of two modes:

- Serial Peripheral Interface (SPI)
- Inter-Integrated Circuit (I^2C™)
  - Full Master mode
  - Slave mode (with general address call)

The I^2C interface supports the following modes in hardware:

- Master mode
- Multi-Master mode
- Slave mode with 5-bit and 7-bit address masking (with address masking for both 10-bit and 7-bit addressing)

All members of the PIC18F46J50 family have two MSSP modules, designated as MSSP1 and MSSP2. The modules operate independently:

- PIC18F4XJ50 devices – Both modules can be configured for either I^2C or SPI communication
- PIC18F2XJ50 devices:
  - MSSP1 can be used for either I^2C or SPI communication
  - MSSP2 can be used only for SPI communication

All of the MSSP1 module-related SPI and I^2C I/O functions are hard-mapped to specific I/O pins.

For MSSP2 functions:

- SPI I/O functions (SDO2, SDI2, SCK2 and $\overline{SS2}$) are all routed through the Peripheral Pin Select (PPS) module.

  These functions may be configured to use any of the RPn remappable pins, as described in **Section 10.7 "Peripheral Pin Select (PPS)"**.
- I^2C functions (SCL2 and SDA2) have fixed pin locations.

On all PIC18F46J50 family devices, the SPI DMA capability can only be used in conjunction with MSSP2. The SPI DMA feature is described in **Section 19.4 "SPI DMA Module"**.

Note:	Throughout this section, generic references to an MSSP module in any of its operating modes may be interpreted as being equally applicable to MSSP1 or MSSP2. Register names and module I/O signals use the generic designator 'x' to indicate the use of a numeral to distinguish a particular module when required. Control bit names are not individuated.

19.2 Control Registers

Each MSSP module has three associated control registers. These include a status register (SSPxSTAT) and two control registers (SSPxCON1 and SSPxCON2). The use of these registers and their individual Configuration bits differ significantly depending on whether the MSSP module is operated in SPI or I^2C mode.

Additional details are provided under the individual sections.

Note:	In devices with more than one MSSP module, it is very important to pay close attention to the SSPxCON register names. SSP1CON1 and SSP1CON2 control different operational aspects of the same module, while SSP1CON1 and SSP2CON1 control the same features for two different modules.

19.3 SPI Mode

The SPI mode allows 8 bits of data to be synchronously transmitted and received simultaneously. All four modes of SPI are supported.

When MSSP2 is used in SPI mode, it can optionally be configured to work with the SPI DMA submodule described in **Section 19.4 "SPI DMA Module"**.

To accomplish communication, typically three pins are used:

- Serial Data Out (SDOx) – RC7/RX1/DT1/SDO1/RP18 or SDO2/Remappable
- Serial Data In (SDIx) – RB5/PMA0/KBI1/SDI1/SDA1/RP8 or SDI2/Remappable
- Serial Clock (SCKx) – RB4/PMA1/KBI0/SCK1/SCL1/RP7 or SCK2/Remappable

Additionally, a fourth pin may be used when in a Slave mode of operation:

- Slave Select ($\overline{SSx}$) – RA5/AN4/$\overline{SS1}$/HLVDIN/RCV/RP2 or $\overline{SS2}$/Remappable

Figure 19-1 depicts the block diagram of the MSSP module when operating in SPI mode.

FIGURE 19-1: MSSPx BLOCK DIAGRAM (SPI MODE)

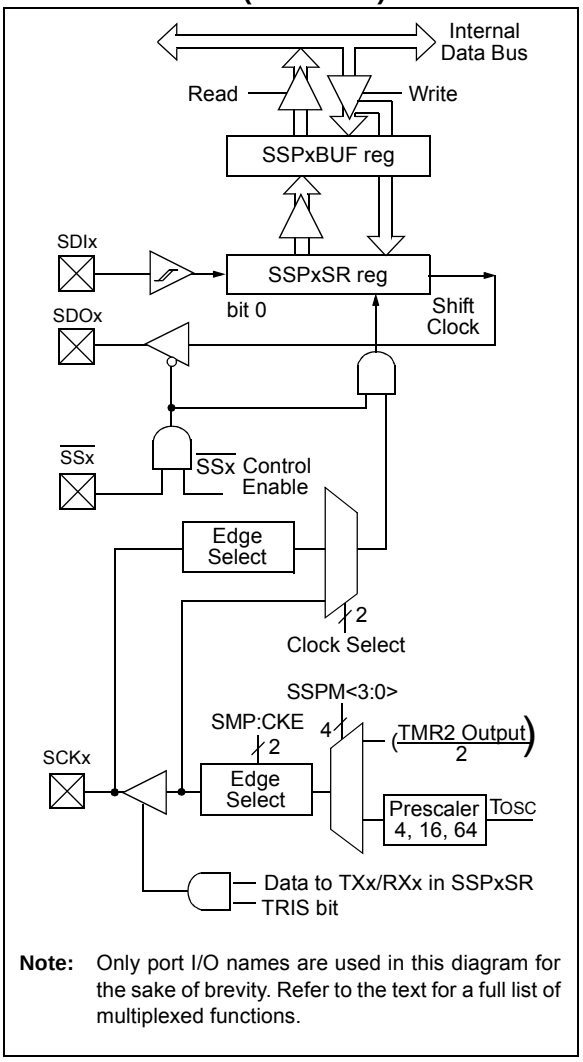

Note: Only port I/O names are used in this diagram for the sake of brevity. Refer to the text for a full list of multiplexed functions.

© 2011 Microchip Technology Inc.

19.3.1 REGISTERS

Each MSSP module has four registers for SPI mode operation. These are:

- MSSPx Control Register 1 (SSPxCON1)
- MSSPx Status Register (SSPxSTAT)
- Serial Receive/Transmit Buffer Register (SSPxBUF)
- MSSPx Shift Register (SSPxSR) – Not directly accessible

SSPxCON1 and SSPxSTAT are the control and status registers in SPI mode operation. The SSPxCON1 register is readable and writable. The lower six bits of the SSPxSTAT are read-only. The upper two bits of the SSPxSTAT are read/write.

SSPxSR is the shift register used for shifting data in or out. SSPxBUF is the buffer register to which data bytes are written to or read from.

In receive operations, SSPxSR and SSPxBUF together create a double-buffered receiver. When SSPxSR receives a complete byte, it is transferred to SSPxBUF and the SSPxIF interrupt is set.

During transmission, the SSPxBUF is not double-buffered. A write to SSPxBUF will write to both SSPxBUF and SSPxSR.

Since the SSPxBUF register is double-buffered for receive operations, using read-modify-write instructions that target SSPxBUF, twice per instruction, such as BCF, COMF, etc., will not work. SSPxBUF may be read or written using standard instructions that target the register, once per instruction, such as `MOVWF`, `MOVF` (dest = WREG) and `MOVFF`.

Similarly, when debugging under an In-Circuit Debugger, performing actions that cause reads of SSPxBUF (ex: debug watch) can consume data that the application code was expecting to receive.

REGISTER 19-1: SSPxSTAT: MSSPx STATUS REGISTER (SPI MODE) (ACCESS FC7h, F73h)

R/W-0	R/W-0	R-0	R-0	R-0	R-0	R-0	R-0
SMP	CKE(1)	D/$\overline{A}$	P	S	R/$\overline{W}$	UA	BF
bit 7							bit 0

Legend:			
R = Readable bit	W = Writable bit	U = Unimplemented bit, read as ‘0’	
-n = Value at POR	‘1’ = Bit is set	‘0’ = Bit is cleared	x = Bit is unknown

bit 7 **SMP:** Sample bit
SPI Master mode:
1 = Input data is sampled at the end of data output time
0 = Input data is sampled at the middle of data output time
SPI Slave mode:
SMP must be cleared when SPI is used in Slave mode.

bit 6 **CKE:** SPI Clock Select bit(1)
1 = Transmit occurs on transition from active to Idle clock state
0 = Transmit occurs on transition from Idle to active clock state

bit 5 **D/$\overline{A}$:** Data/$\overline{\text{Address}}$ bit
Used in I2C™ mode only.

bit 4 **P:** Stop bit
Used in I2C mode only; this bit is cleared when the MSSP module is disabled, SSPEN is cleared.

bit 3 **S:** Start bit
Used in I2C mode only.

bit 2 **R/$\overline{W}$:** Read/$\overline{\text{Write}}$ Information bit
Used in I2C mode only.

bit 1 **UA:** Update Address bit
Used in I2C mode only.

bit 0 **BF:** Buffer Full Status bit
1 = Receive is complete, SSPxBUF is full
0 = Receive is not complete, SSPxBUF is empty

Note 1: Polarity of clock state is set by the CKP bit (SSPxCON1<4>).

REGISTER 19-2: SSPxCON1: MSSPx CONTROL REGISTER 1 (SPI MODE) (ACCESS FC6h, F72h)

R/W-0	R/C-0	R/W-0	R/W-0	R/W-0	R/W-0	R/W-0	R/W-0
WCOL	SSPOV(1)	SSPEN(2)	CKP	SSPM3(3)	SSPM2(3)	SSPM1(3)	SSPM0(3)
bit 7							bit 0

Legend:			
R = Readable bit	W = Writable bit	C = Clearable bit	U = Unimplemented bit, read as '0'
-n = Value at POR	'1' = Bit is set	'0' = Bit is cleared	x = Bit is unknown

bit 7 **WCOL:** Write Collision Detect bit
1 = The SSPxBUF register is written while it is still transmitting the previous word (must be cleared in software)
0 = No collision

bit 6 **SSPOV:** Receive Overflow Indicator bit(1)
SPI Slave mode:
1 = A new byte is received while the SSPxBUF register is still holding the previous data. In case of overflow, the data in SSPxSR is lost. Overflow can only occur in Slave mode. The user must read the SSPxBUF, even if only transmitting data, to avoid setting overflow (must be cleared in software).
0 = No overflow

bit 5 **SSPEN:** Master Synchronous Serial Port Enable bit(2)
1 = Enables serial port and configures SCKx, SDOx, SDIx and $\overline{SSx}$ as serial port pins
0 = Disables serial port and configures these pins as I/O port pins

bit 4 **CKP:** Clock Polarity Select bit
1 = Idle state for clock is a high level
0 = Idle state for clock is a low level

bit 3-0 **SSPM<3:0>:** Master Synchronous Serial Port Mode Select bits(3)
0101 = SPI Slave mode, Clock = SCKx pin, $\overline{SSx}$ pin control is disabled, $\overline{SSx}$ can be used as I/O pin
0100 = SPI Slave mode, Clock = SCKx pin, $\overline{SSx}$ pin control is enabled
0011 = SPI Master mode, Clock = TMR2 output/2
0010 = SPI Master mode, Clock = FOSC/64
0001 = SPI Master mode, Clock = FOSC/16
0000 = SPI Master mode, Clock = FOSC/4

Note 1: In Master mode, the overflow bit is not set since each new reception (and transmission) is initiated by writing to the SSPxBUF register.
2: When enabled, this pin must be properly configured as input or output.
3: Bit combinations, not specifically listed here, are either reserved or implemented in I^2C™ mode only.

© 2011 Microchip Technology Inc.

19.3.2 OPERATION

When initializing the SPI, several options need to be specified. This is done by programming the appropriate control bits (SSPxCON1<5:0> and SSPxSTAT<7:6>). These control bits allow the following to be specified:

- Master mode (SCKx is the clock output)
- Slave mode (SCKx is the clock input)
- Clock Polarity (Idle state of SCKx)
- Data Input Sample Phase (middle or end of data output time)
- Clock Edge (output data on rising/falling edge of SCKx)
- Clock Rate (Master mode only)
- Slave Select mode (Slave mode only)

Each MSSP module consists of a Transmit/Receive Shift register (SSPxSR) and a Buffer register (SSPxBUF). The SSPxSR shifts the data in and out of the device, MSb first. The SSPxBUF holds the data that was written to the SSPxSR until the received data is ready. Once the 8 bits of data have been received, that byte is moved to the SSPxBUF register. Then, the Buffer Full (BF) detect bit (SSPxSTAT<0>) and the interrupt flag bit, SSPxIF, are set. This double-buffering of the received data (SSPxBUF) allows the next byte to start reception before reading the data that was just received.

Any write to the SSPxBUF register during transmission/reception of data will be ignored and the Write Collision Detect bit, WCOL (SSPxCON1<7>), will be set. User software must clear the WCOL bit so that it can be determined if the following write(s) to the SSPxBUF register completed successfully.

Note:	When the application software is expecting to receive valid data, the SSPxBUF should be read before the next byte of transfer data is written to the SSPxBUF. Application software should follow this process even when the current contents of SSPxBUF are not important.

The Buffer Full bit, BF (SSPxSTAT<0>), indicates when SSPxBUF has been loaded with the received data (transmission is complete). When the SSPxBUF is read, the BF bit is cleared. This data may be irrelevant if the SPI is only a transmitter. Generally, the MSSP interrupt is used to determine when the transmission/reception has completed. If the interrupt method is not going to be used, then software polling can be done to ensure that a write collision does not occur.

Example 19-1 provides the loading of the SSPxBUF (SSPxSR) for data transmission.

The SSPxSR is not directly readable or writable and can only be accessed by addressing the SSPxBUF register. Additionally, the SSPxSTAT register indicates the various status conditions.

19.3.3 OPEN-DRAIN OUTPUT OPTION

The drivers for the SDOx output and SCKx clock pins can be optionally configured as open-drain outputs. This feature allows the voltage level on the pin to be pulled to a higher level through an external pull-up resistor, provided the SDOx or SCKx pin is not multiplexed with an ANx analog function. This allows the output to communicate with external circuits without the need for additional level shifters. For more information, see **Section 10.1.4 “Open-Drain Outputs”**.

The open-drain output option is controlled by the SPI2OD and SPI1OD bits (ODCON3<1:0>). Setting an SPIxOD bit configures both SDOx and SCKx pins for the corresponding open-drain operation.

EXAMPLE 19-1: LOADING THE SSP1BUF (SSP1SR) REGISTER

```
LOOP    BTFSS   SSP1STAT, BF    ;Has data been received (transmit complete)?
        BRA     LOOP            ;No
        MOVF    SSP1BUF, W      ;WREG reg = contents of SSP1BUF
        MOVWF   RXDATA          ;Save in user RAM, if data is meaningful
        MOVF    TXDATA, W       ;W reg = contents of TXDATA
        MOVWF   SSP1BUF         ;New data to xmit
```

19.3.4 ENABLING SPI I/O

To enable the serial port, MSSP Enable bit, SSPEN (SSPxCON1<5>), must be set. To reset or reconfigure SPI mode, clear the SSPEN bit, reinitialize the SSPxCON1 registers and then set the SSPEN bit. This configures the SDIx, SDOx, SCKx and $\overline{SSx}$ pins as serial port pins. For the pins to behave as the serial port function, the appropriate TRIS bits, ANCON/PCFG bits and Peripheral Pin Select registers (if using MSSP2) should be correctly initialized prior to setting the SSPEN bit.

A typical SPI serial port initialization process follows:

- Initialize ODCON3 register (optional open-drain output control)
- Initialize remappable pin functions (if using MSSP2, see **Section 10.7 "Peripheral Pin Select (PPS)"**)
- Initialize SCKx LAT value to desired Idle SCK level (if master device)
- Initialize SCKx ANCON/PCFG bit (if Slave mode and multiplexed with ANx function)
- Initialize SCKx TRIS bit as output (Master mode) or input (Slave mode)
- Initialize SDIx ANCON/PCFG bit (if SDIx is multiplexed with ANx function)
- Initialize SDIx TRIS bit
- Initialize $\overline{SSx}$ ANCON/PCFG bit (if Slave mode and multiplexed with ANx function)
- Initialize $\overline{SSx}$ TRIS bit (Slave modes)
- Initialize SDOx TRIS bit
- Initialize SSPxSTAT register
- Initialize SSPxCON1 register
- Set SSPEN bit to enable the module

Any MSSP1 serial port function that is not desired may be overridden by programming the corresponding Data Direction (TRIS) register to the opposite value. If individual MSSP2 serial port functions will not be used, they may be left unmapped.

Note: When MSSP2 is used in SPI Master mode, the SCK2 function must be configured as both an output and an input in the PPS module. SCK2 must be initialized as an output pin (by writing 0x0A to one of the RPORx registers). Additionally, SCK2IN must also be mapped to the same pin by initializing the RPINR22 register. Failure to initialize SCK2/SCK2IN as both output and input will prevent the module from receiving data on the SDI2 pin, as the module uses the SCK2IN signal to latch the received data.

19.3.5 TYPICAL CONNECTION

Figure 19-2 illustrates a typical connection between two microcontrollers. The master controller (Processor 1) initiates the data transfer by sending the SCKx signal. Data is shifted out of both shift registers on their programmed clock edge and latched on the opposite edge of the clock. Both processors should be programmed to the same Clock Polarity (CKP), then both controllers would send and receive data at the same time. Whether the data is meaningful (or dummy data) depends on the application software. This leads to three scenarios for data transmission:

- Master sends valid data – Slave sends dummy data
- Master sends valid data – Slave sends valid data
- Master sends dummy data – Slave sends valid data

FIGURE 19-2: SPI MASTER/SLAVE CONNECTION

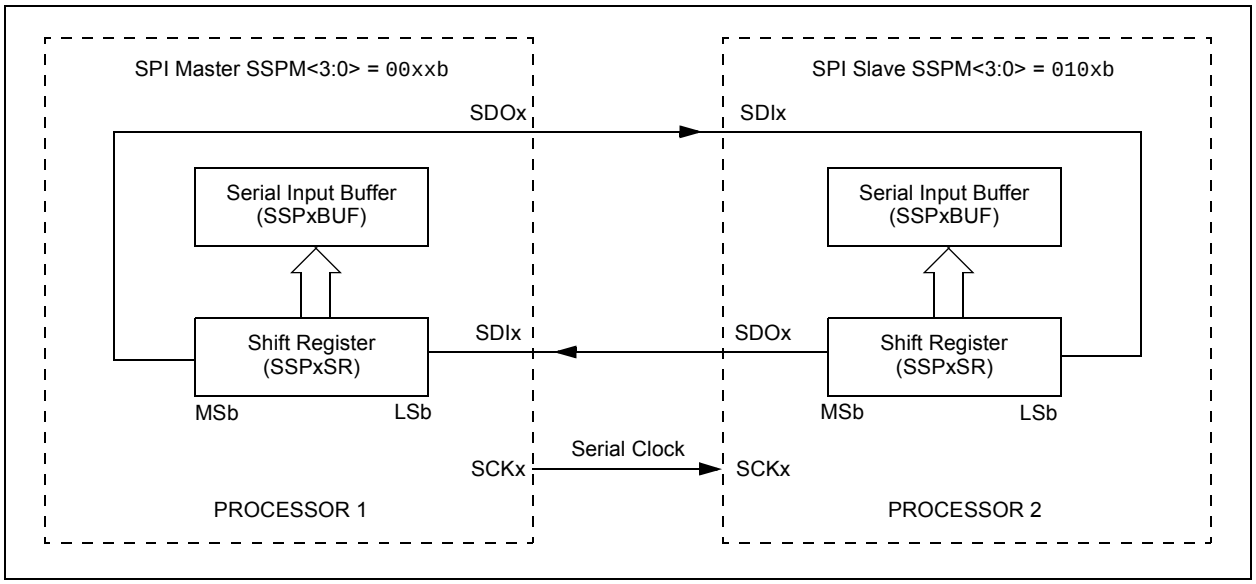

© 2011 Microchip Technology Inc.

19.3.6 MASTER MODE

The master can initiate the data transfer at any time because it controls the SCKx. The master determines when the slave (Processor 2, Figure 19-2) is to broadcast data by the software protocol.

In Master mode, the data is transmitted/received as soon as the SSPxBUF register is written to. If the SPI is only going to receive, the SDOx output could be disabled (programmed as an input). The SSPxSR register will continue to shift in the signal present on the SDIx pin at the programmed clock rate. As each byte is received, it will be loaded into the SSPxBUF register as if a normal received byte (interrupts and status bits appropriately set). This could be useful in receiver applications as a "Line Activity Monitor" mode.

Note:	To avoid lost data in Master mode, a read of the SSPxBUF must be performed to clear the Buffer Full (BF) detect bit (SSPxSTAT<0>) between each transmission.

The CKP is selected by appropriately programming the CKP bit (SSPxCON1<4>). This then, would give waveforms for SPI communication as illustrated in Figure 19-3, Figure 19-5 and Figure 19-6, where the Most Significant Byte (MSB) is transmitted first. In Master mode, the SPI clock rate (bit rate) is user-programmable to be one of the following:

- FOSC/4 (or TCY)
- FOSC/16 (or 4 • TCY)
- FOSC/64 (or 16 • TCY)
- Timer2 output/2

When using the Timer2 output/2 option, the Period Register 2 (PR2) can be used to determine the SPI bit rate. However, only PR2 values of 0x01 to 0xFF are valid in this mode.

Figure 19-3 illustrates the waveforms for Master mode. When the CKE bit is set, the SDOx data is valid before there is a clock edge on SCKx. The change of the input sample is shown based on the state of the SMP bit. The time when the SSPxBUF is loaded with the received data is shown.

FIGURE 19-3: SPI MODE WAVEFORM (MASTER MODE)

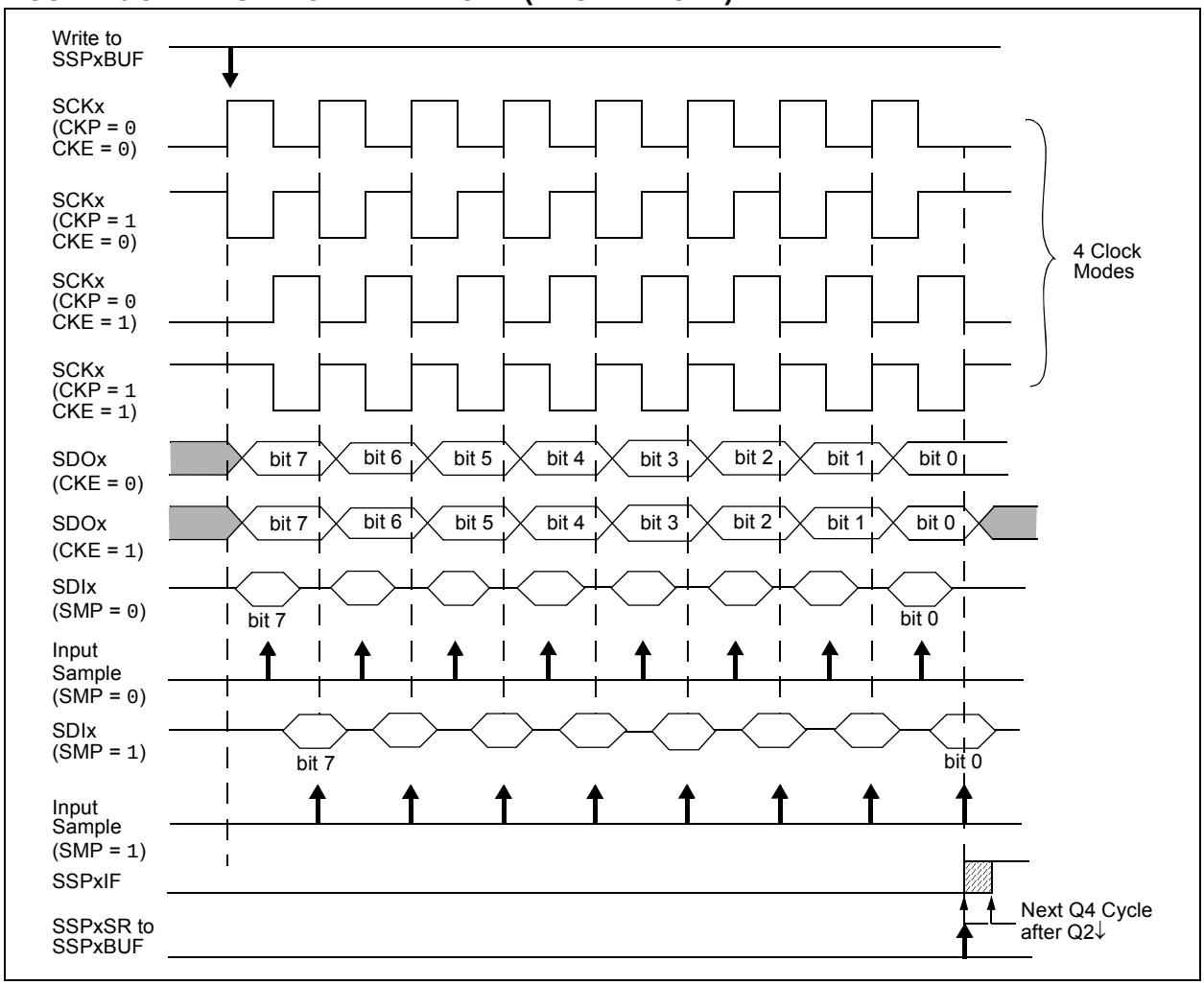

19.3.7 SLAVE MODE

In Slave mode, the data is transmitted and received as the external clock pulses appear on SCKx. When the last bit is latched, the SSPxIF interrupt flag bit is set.

While in Slave mode, the external clock is supplied by the external clock source on the SCKx pin. This external clock must meet the minimum high and low times as specified in the electrical specifications.

While in Sleep mode, the slave can transmit/receive data. When a byte is received, the device can be configured to wake-up from Sleep.

19.3.8 SLAVE SELECT SYNCHRONIZATION

The $\overline{SSx}$ pin allows a Synchronous Slave mode. The SPI must be in Slave mode with the $\overline{SSx}$ pin control enabled (SSPxCON1<3:0> = 04h). When the $\overline{SSx}$ pin is low, transmission and reception are enabled and the SDOx pin is driven. When the $\overline{SSx}$ pin goes high, the SDOx pin is no longer driven, even if in the middle of a transmitted byte and becomes a floating output. External pull-up/pull-down resistors may be desirable depending on the application.

Note 1:	When the SPI is in Slave mode with the $\overline{SSx}$ pin control enabled (SSPxCON1<3:0> = 0100), the SPI module will reset if the $\overline{SSx}$ pin is set to V_{DD}.
2:	If the SPI is used in Slave mode with CKE set, then the $\overline{SSx}$ pin control must be enabled.

When the SPI module resets, the bit counter is forced to '0'. This can be done by either forcing the $\overline{SSx}$ pin to a high level or clearing the SSPEN bit.

To emulate two-wire communication, the SDOx pin can be connected to the SDIx pin. When the SPI needs to operate as a receiver, the SDOx pin can be configured as an input. This disables transmissions from the SDOx. The SDIx can always be left as an input (SDIx function) since it cannot create a bus conflict.

FIGURE 19-4: SLAVE SYNCHRONIZATION WAVEFORM

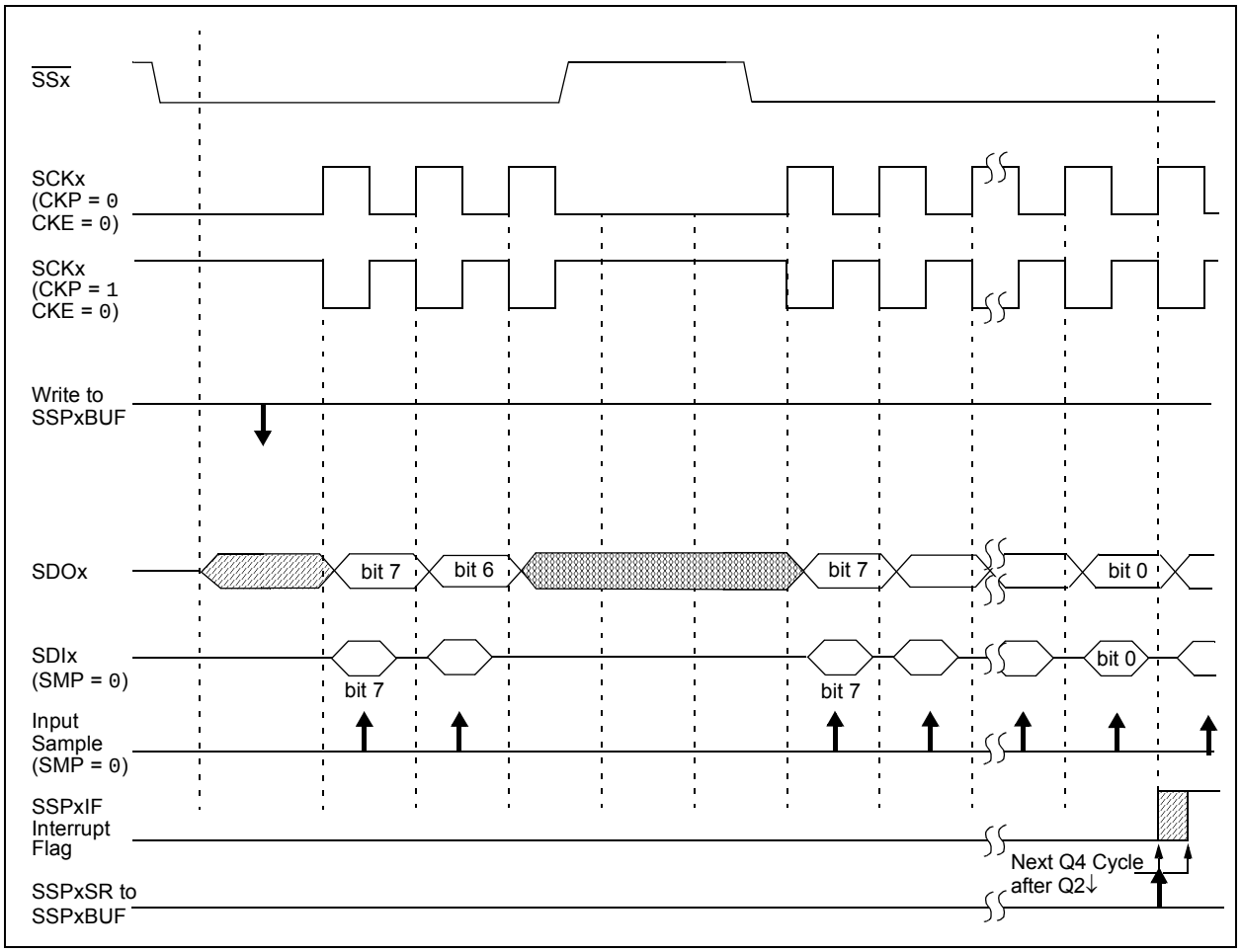

© 2011 Microchip Technology Inc.

FIGURE 19-5: SPI MODE WAVEFORM (SLAVE MODE WITH CKE = 0)

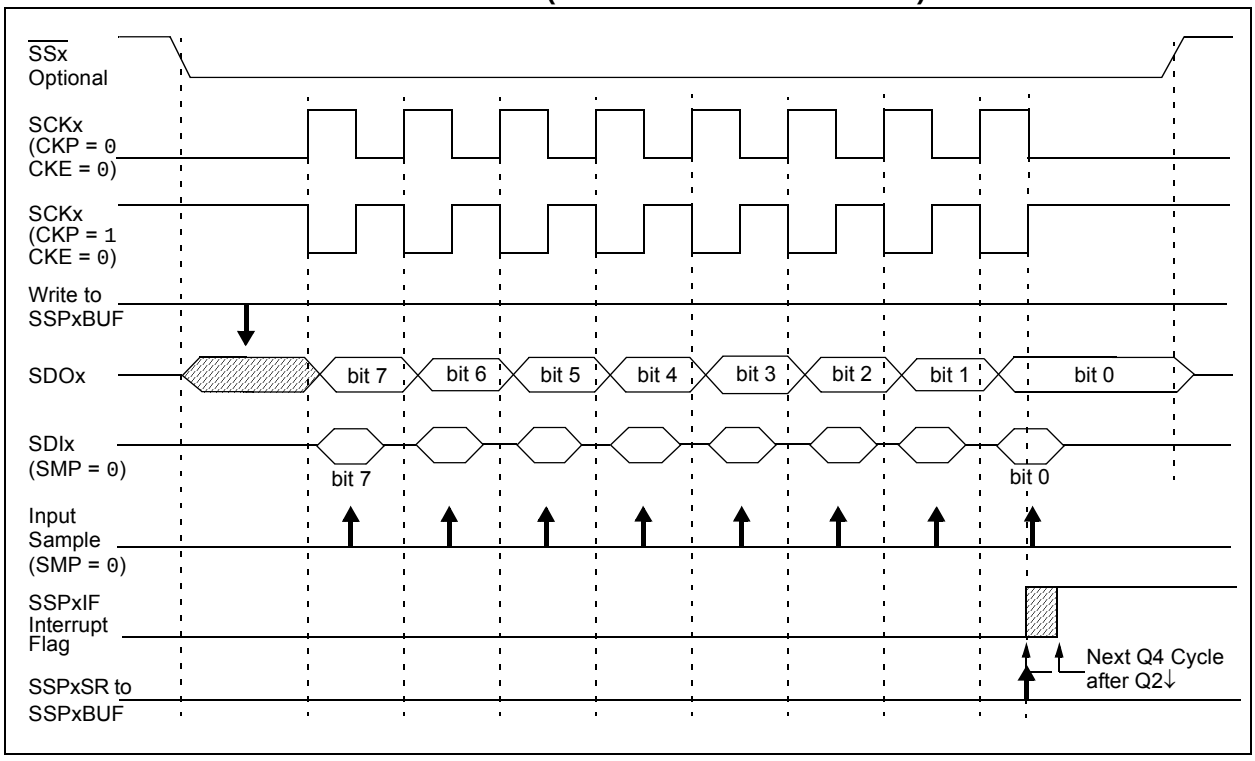

FIGURE 19-6: SPI MODE WAVEFORM (SLAVE MODE WITH CKE = 1)

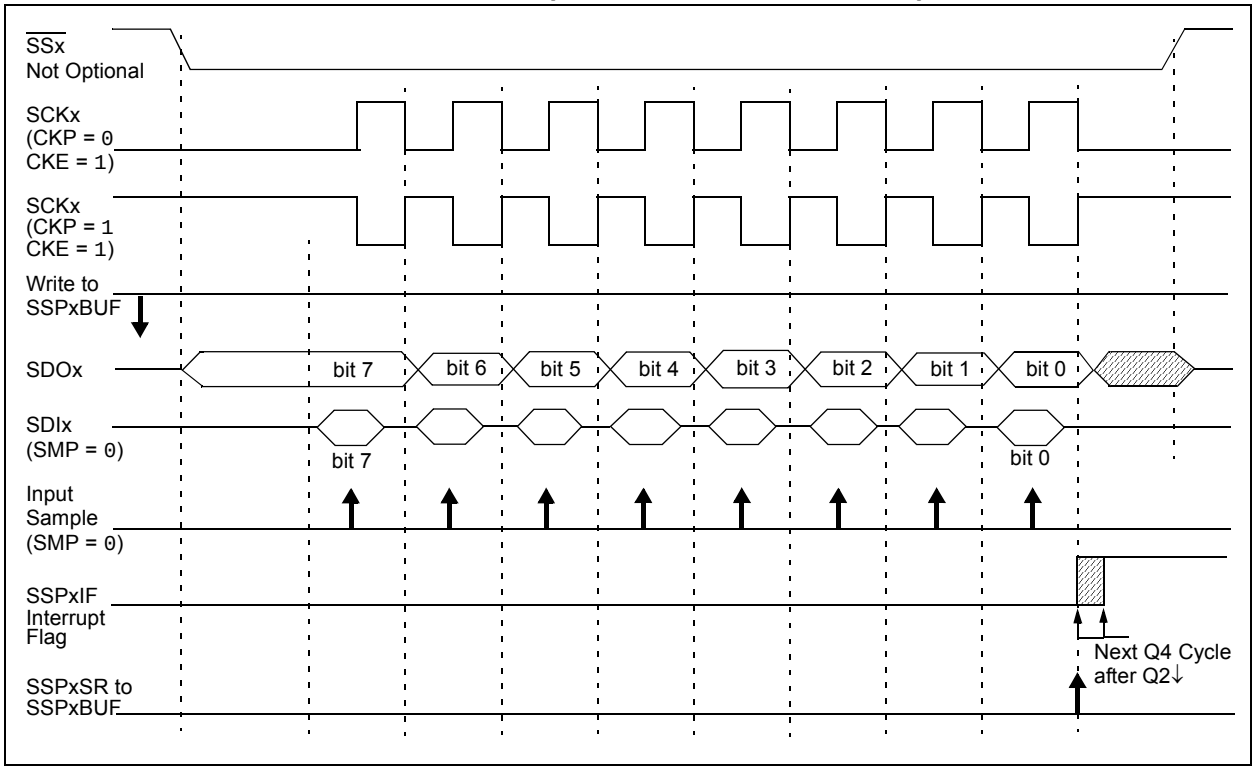

19.3.9 OPERATION IN POWER-MANAGED MODES

In SPI Master mode, module clocks may be operating at a different speed than when in full-power mode. In the case of Sleep mode, all clocks are halted.

In Idle modes, a clock is provided to the peripherals. That clock can be from the primary clock source, the secondary clock (Timer1 oscillator) or the INTOSC source. See **Section 3.5 "Clock Sources and Oscillator Switching"** for additional information.

In most cases, the speed that the master clocks SPI data is not important; however, this should be evaluated for each system.

If MSSP interrupts are enabled, they can wake the controller from Sleep mode, or one of the Idle modes, when the master completes sending data. If an exit from Sleep or Idle mode is not desired, MSSP interrupts should be disabled.

If the Sleep mode is selected, all module clocks are halted and the transmission/reception will remain in that state until the device wakes. After the device returns to Run mode, the module will resume transmitting and receiving data.

In SPI Slave mode, the SPI Transmit/Receive Shift register operates asynchronously to the device. This allows the device to be placed in any power-managed mode and data to be shifted into the SPI Transmit/Receive Shift register. When all 8 bits have been received, the MSSP interrupt flag bit will be set, and if enabled, will wake the device.

19.3.10 EFFECTS OF A RESET

A Reset disables the MSSP module and terminates the current transfer.

19.3.11 BUS MODE COMPATIBILITY

Table 19-1 provides the compatibility between the standard SPI modes and the states of the CKP and CKE control bits.

TABLE 19-1: SPI BUS MODES

Standard SPI Mode Terminology	Control Bits State	
	CKP	CKE
0, 0	0	1
0, 1	0	0
1, 0	1	1
1, 1	1	0

Note: There is also an SMP bit, which controls when the data is sampled.

19.3.12 SPI CLOCK SPEED AND MODULE INTERACTIONS

Because MSSP1 and MSSP2 are independent modules, they can operate simultaneously at different data rates. Setting the SSPM<3:0> bits of the SSPxCON1 register determines the rate for the corresponding module.

An exception is when both modules use Timer2 as a time base in Master mode. In this instance, any changes to the Timer2 module's operation will affect both MSSP modules equally. If different bit rates are required for each module, the user should select one of the other three time base options for one of the modules.

© 2011 Microchip Technology Inc.

TABLE 19-2: REGISTERS ASSOCIATED WITH SPI OPERATION

Name	Bit 7	Bit 6	Bit 5	Bit 4	Bit 3	Bit 2	Bit 1	Bit 0	Reset Values on Page:
INTCON	GIE/GIEH	PEIE/GIEL	TMR0IE	INT0IE	RBIE	TMR0IF	INT0IF	RBIF	69
PIR1	PMPIF(2)	ADIF	RC1IF	TX1IF	SSP1IF	CCP1IF	TMR2IF	TMR1IF	72
PIE1	PMPIE(2)	ADIE	RC1IE	TX1IE	SSP1IE	CCP1IE	TMR2IE	TMR1IE	72
IPR1	PMPIP(2)	ADIP	RC1IP	TX1IP	SSP1IP	CCP1IP	TMR2IP	TMR1IP	72
PIR3	SSP2IF	BCL2IF	RC2IF	TX2IF	TMR4IF	CTMUIF	TMR3GIF	RTCCIF	72
PIE3	SSP2IE	BCL2IE	RC2IE	TX2IE	TMR4IE	CTMUIE	TMR3GIE	RTCCIE	72
IPR3	SSP2IP	BCL2IP	RC2IP	TX2IP	TMR4IP	CTMUIP	TMR3GIP	RTCCIP	72
TRISA	TRISA7	TRISA6	TRISA5	—	TRISA3	TRISA2	TRISA1	TRISA0	72
TRISB	TRISB7	TRISB6	TRISB5	TRISB4	TRISB3	TRISB2	TRISB1	TRISB0	72
TRISC	TRISC7	TRISC6	—	—	—	TRISC2	TRISC1	TRISC0	72
SSP1BUF	MSSP1 Receive Buffer/Transmit Register								70
SSPxCON1	WCOL	SSPOV	SSPEN	CKP	SSPM3	SSPM2	SSPM1	SSPM0	70
SSPxSTAT	SMP	CKE	D/$\overline{A}$	P	S	R/$\overline{W}$	UA	BF	70
SSP2BUF	MSSP2 Receive Buffer/Transmit Register								73
ODCON3(1)	—	—	—	—	—	—	SPI2OD	SPI1OD	74

Legend: Shaded cells are not used by the MSSP module in SPI mode.

Note 1: Configuration SFR overlaps with default SFR at this address; available only when WDTCON<4> = 1.

2: These bits are only available on 44-pin devices.

19.4 SPI DMA MODULE

The SPI DMA module contains control logic to allow the MSSP2 module to perform SPI direct memory access transfers. This enables the module to quickly transmit or receive large amounts of data with relatively little CPU intervention. When the SPI DMA module is used, MSSP2 can directly read and write to general purpose SRAM. When the SPI DMA module is not enabled, MSSP2 functions normally, but without DMA capability.

The SPI DMA module is composed of control logic, a Destination Receive Address Pointer, a Transmit Source Address Pointer, an interrupt manager and a Byte Count register for setting the size of each DMA transfer. The DMA module may be used with all SPI Master and Slave modes, and supports both half-duplex and full-duplex transfers.

19.4.1 I/O PIN CONSIDERATIONS

When enabled, the SPI DMA module uses the MSSP2 module. All SPI related input and output signals, related to MSSP2, are routed through the Peripheral Pin Select module. The appropriate initialization procedure, as described in **Section 19.4.6 "Using the SPI DMA Module"**, will need to be followed prior to using the SPI DMA module. The output pins assigned to the SDO2 and SCK2 functions can optionally be configured as open-drain outputs, such as for level shifting operations mentioned in the same section.

19.4.2 RAM TO RAM COPY OPERATIONS

Although the SPI DMA module is primarily intended to be used for SPI communication purposes, the module can also be used to perform RAM to RAM copy operations. To do this, configure the module for Full-Duplex Master mode operation, but assign the SDO2 output and SDI2 input functions onto the same RPn pin in the PPS module. Also assign SCK2 out and SCK2 in onto the same RPn pin (a different pin than used for SDO2 and SDI2). This will allow the module to operate in Loopback mode, providing RAM copy capability.

19.4.3 IDLE AND SLEEP CONSIDERATIONS

The SPI DMA module remains fully functional when the microcontroller is in Idle mode.

During normal Sleep, the SPI DMA module is not functional and should not be used. To avoid corrupting a transfer, user firmware should be careful to make certain that pending DMA operations are complete by polling the DMAEN bit in the DMACON1 register, prior to putting the microcontroller into Sleep.

In SPI Slave modes, the MSSP2 module is capable of transmitting and/or receiving one byte of data while in Sleep mode. This allows the SSP2IF flag in the PIR3 register to be used as a wake-up source. When the DMAEN bit is cleared, the SPI DMA module is effectively disabled, and the MSSP2 module functions normally, but without DMA capabilities. If the DMAEN bit is clear prior to entering Sleep, it is still possible to use the SSP2IF as a wake-up source without any data loss.

Neither MSSP2 nor the SPI DMA module will provide any functionality in Deep Sleep. Upon exiting from Deep Sleep, all of the I/O pins, MSSP2 and SPI DMA related registers will need to be fully reinitialized before the SPI DMA module can be used again.

19.4.4 REGISTERS

The SPI DMA engine is enabled and controlled by the following Special Function Registers:

- DMACON1
- DMACON2
- TXADDRH
- TXADDRL
- RXADDRH
- RXADDRL
- DMABCH
- DMABCL

© 2011 Microchip Technology Inc.

19.4.4.1 DMACON1

The DMACON1 register is used to select the main operating mode of the SPI DMA module. The SSCON1 and SSCON0 bits are used to control the slave select pin.

When MSSP2 is used in SPI Master mode with the SPI DMA module, $\overline{SSDMA}$ can be controlled by the DMA module as an output pin. If MSSP2 will be used to communicate with an SPI slave device that needs the $\overline{SSx}$ pin to be toggled periodically, the SPI DMA hardware can automatically be used to deassert $\overline{SSx}$ between each byte, every two bytes or every four bytes.

Alternatively, user firmware can manually generate slave select signals with normal general purpose I/O pins, if required by the slave device(s).

When the TXINC bit is set, the TXADDR register will automatically increment after each transmitted byte. Automatic transmit address increment can be disabled by clearing the TXINC bit. If the automatic transmit address increment is disabled, each byte, which is output on SDO2, will be the same (the contents of the SRAM pointed to by the TXADDR register) for the entire DMA transaction.

When the RXINC bit is set, the RXADDR register will automatically increment after each received byte. Automatic receive address increment can be disabled by clearing the RXINC bit. If RXINC is disabled in Full-Duplex or Half-Duplex Receive modes, all incoming data bytes on SDI2 will overwrite the same memory location pointed to by the RXADDR register. After the SPI DMA transaction has completed, the last received byte will reside in the memory location pointed to by the RXADDR register.

The SPI DMA module can be used for either half-duplex receive only communication, half-duplex transmit only communication or full-duplex simultaneous transmit and receive operations. All modes are available for both SPI master and SPI slave configurations. The DUPLEX0 and DUPLEX1 bits can be used to select the desired operating mode.

The behavior of the DLYINTEN bit varies greatly depending on the SPI operating mode. For example behavior for each of the modes, see Figure 19-3 through Figure 19-6.

SPI Slave mode, DLYINTEN = 1: In this mode, an SSP2IF interrupt will be generated during a transfer if the time between successful byte transmission events is longer than the value set by the DLYCYC<3:0> bits in the DMACON2 register. This interrupt allows slave firmware to know that the master device is taking an unusually large amount of time between byte transmissions. For example, this information may be useful for implementing application-defined communication protocols, involving time-outs if the bus remains Idle for too long. When DLYINTEN = 1, the DLYLVL<3:0> interrupts occur normally according to the selected setting.

SPI Slave mode, DLYINTEN = 0: In this mode, the time-out-based interrupt is disabled. No additional SSP2IF interrupt events will be generated by the SPI DMA module, other than those indicated by the INTLVL<3:0> bits in the DMACON2 register. In this mode, always set DLYCYC<3:0> = 0000.

SPI Master mode, DLYINTEN = 0: The DLYCYC<3:0> bits in the DMACON2 register determine the amount of additional inter-byte delay, which is added by the SPI DMA module during a transfer. The Master mode $\overline{SS2}$ output feature may be used.

SPI Master mode, DLYINTEN = 1: The amount of hardware overhead is slightly reduced in this mode, and the minimum inter-byte delay is 8 TCY for FOSC/4, 9 TCY for FOSC/16 and 15 TCY for FOSC/64. This mode can potentially be used to obtain slightly higher effective SPI bandwidth. In this mode, the $\overline{SS2}$ control feature cannot be used, and should always be disabled (DMACON1<7:6> = 00). Additionally, the interrupt generating hardware (used in Slave mode) remains active. To avoid extraneous SSP2IF interrupt events, set the DMACON2 delay bits, DLYCYC<3:0> = 1111, and ensure that the SPI serial clock rate is no slower than FOSC/64.

In SPI Master modes, the DMAEN bit is used to enable the SPI DMA module and to initiate an SPI DMA transaction. After user firmware sets the DMAEN bit, the DMA hardware will begin transmitting and/or receiving data bytes according to the configuration used. In SPI Slave modes, setting the DMAEN bit will finish the initialization steps needed to prepare the SPI DMA module for communication (which must still be initiated by the master device).

To avoid possible data corruption, once the DMAEN bit is set, user firmware should not attempt to modify any of the MSSP2 or SPI DMA related registers, with the exception of the INTLVL bits in the DMACON2 register.

If user firmware wants to halt an ongoing DMA transaction, the DMAEN bit can be manually cleared by the firmware. Clearing the DMAEN bit while a byte is currently being transmitted will not immediately halt the byte in progress. Instead, any byte currently in progress will be completed before the MSSP2 and SPI DMA modules go back to their Idle conditions. If user firmware clears the DMAEN bit, the TXADDR, RXADDR and DMABC registers will no longer update, and the DMA module will no longer make any additional read or writes to SRAM; therefore, state information can be lost.

© 2011 Microchip Technology Inc.

REGISTER 19-3: DMACON1: DMA CONTROL REGISTER 1 (ACCESS F88h)

R/W-0	R/W-0	R/W-0	R/W-0	R/W-0	R/W-0	R/W-0	R/W-0
SSCON1	SSCON0	TXINC	RXINC	DUPLEX1	DUPLEX0	DLYINTEN	DMAEN
bit 7							bit 0

Legend:			
R = Readable bit	W = Writable bit	U = Unimplemented bit, read as '0'	
-n = Value at POR	'1' = Bit is set	'0' = Bit is cleared	x = Bit is unknown

bit 7-6 **SSCON<1:0>:** $\overline{\text{SSDMA}}$ Output Control bits (Master modes only)
11 = $\overline{\text{SSDMA}}$ is asserted for the duration of 4 bytes; DLYINTEN is always reset low
01 = $\overline{\text{SSDMA}}$ is asserted for the duration of 2 bytes; DLYINTEN is always reset low
10 = $\overline{\text{SSDMA}}$ is asserted for the duration of 1 byte; DLYINTEN is always reset low
00 = $\overline{\text{SSDMA}}$ is not controlled by the DMA module; DLYINTEN bit is software-programmable

bit 5 **TXINC:** Transmit Address Increment Enable bit
Allows the transmit address to increment as the transfer progresses.
1 = The transmit address is to be incremented from the initial value of TXADDR<11:0>
0 = The transmit address is always set to the initial value of TXADDR<11:0>

bit 4 **RXINC:** Receive Address Increment Enable bit
Allows the receive address to increment as the transfer progresses.
1 = The receive address is to be incremented from the inti al value of RXADDR<11:0>
0 = The receive address is always set to the initial value of RXADDR<11:0>

bit 3-2 **DUPLEX<1:0>:** Transmit/Receive Operating Mode Select bits
10 = SPI DMA operates in Full-Duplex mode, data is simultaneously transmitted and received
01 = DMA operates in Half-Duplex mode, data is transmitted only
00 = DMA operates in Half-Duplex mode, data is received only

bit 1 **DLYINTEN:** Delay Interrupt Enable bit
Enables the interrupt to be invoked after the number of TCY cycles specified in DLYCYC<2:0> has elapsed from the latest completed transfer.
1 = The interrupt is enabled, SSCON<1:0> must be set to '00'
0 = The interrupt is disabled

bit 0 **DMAEN:** DMA Operation Start/Stop bit
This bit is set by the users' software to start the DMA operation. It is reset back to zero by the DMA engine when the DMA operation is completed or aborted.
1 = DMA is in session
0 = DMA is not in session

© 2011 Microchip Technology Inc.

19.4.4.2 DMACON2

The DMACON2 register contains control bits for controlling interrupt generation and inter-byte delay behavior. The INTLVL<3:0> bits are used to select when an SSP2IF interrupt should be generated.The function of the DLYCYC<3:0> bits depends on the SPI operating mode (Master/Slave), as well as the DLYINTEN setting. In SPI Master mode, the DLYCYC<3:0> bits can be used to control how much time the module will Idle between bytes in a transfer. By default, the hardware requires a minimum delay of: 8 TCY for FOSC/4, 9 TCY for FOSC/16 and 15 TCY for FOSC/64. Additional delay can be added with the DLYCYC bits. In SPI Slave modes, the DLYCYC<3:0> bits may optionally be used to trigger an additional time-out based interrupt.

REGISTER 19-4: DMACON2: DMA CONTROL REGISTER 2 (ACCESS F86h)

R/W-0	R/W-0	R/W-0	R/W-0	R/W-0	R/W-0	R/W-0	R/W-0
DLYCYC3	DLYCYC2	DLYCYC1	DLYCYC0	INTLVL3	INTLVL2	INTLVL1	INTLVL0
bit 7							bit 0

Legend:			
R = Readable bit	W = Writable bit	U = Unimplemented bit, read as ‘0’	
-n = Value at POR	‘1’ = Bit is set	‘0’ = Bit is cleared	x = Bit is unknown

bit 7-4 **DLYCYC<3:0>:** Delay Cycle Selection bits

When DLYINTEN = 0, these bits specify the additional delay (above the base overhead of the hardware) in number of TCY cycles before the SSP2BUF register is written again for the next transfer. When DLYINTEN = 1, these bits specify the delay in number of TCY cycles from the latest completed transfer before an interrupt to the CPU is invoked. In this case, the additional delay before the SSP2BUF register is written again is 1 TCY + (base overhead of hardware).

1111 = Delay time in number of instruction cycles is 2,048 cycles
1110 = Delay time in number of instruction cycles is 1,024 cycles
1101 = Delay time in number of instruction cycles is 896 cycles
1100 = Delay time in number of instruction cycles is 768 cycles
1011 = Delay time in number of instruction cycles is 640 cycles
1010 = Delay time in number of instruction cycles is 512 cycles
1001 = Delay time in number of instruction cycles is 384 cycles
1000 = Delay time in number of instruction cycles is 256 cycles
0111 = Delay time in number of instruction cycles is 128 cycles
0110 = Delay time in number of instruction cycles is 64 cycles
0101 = Delay time in number of instruction cycles is 32 cycles
0100 = Delay time in number of instruction cycles is 16 cycles
0011 = Delay time in number of instruction cycles is 8 cycles
0010 = Delay time in number of instruction cycles is 4 cycles
0001 = Delay time in number of instruction cycles is 2 cycles
0000 = Delay time in number of instruction cycles is 1 cycle

bit 3-0 **INTLVL<3:0>:** Watermark Interrupt Enable bits

These bits specify the amount of remaining data yet to be transferred (transmitted and/or received) upon which an interrupt is generated.

1111 = Amount of remaining data to be transferred is 576 bytes
1110 = Amount of remaining data to be transferred is 512 bytes
1101 = Amount of remaining data to be transferred is 448 bytes
1100 = Amount of remaining data to be transferred is 384 bytes
1011 = Amount of remaining data to be transferred is 320 bytes
1010 = Amount of remaining data to be transferred is 256 bytes
1001 = Amount of remaining data to be transferred is 192 bytes
1000 = Amount of remaining data to be transferred is 128 bytes
0111 = Amount of remaining data to be transferred is 67 bytes
0110 = Amount of remaining data to be transferred is 32 bytes
0101 = Amount of remaining data to be transferred is 16 bytes
0100 = Amount of remaining data to be transferred is 8 bytes
0011 = Amount of remaining data to be transferred is 4 bytes
0010 = Amount of remaining data to be transferred is 2 bytes
0001 = Amount of remaining data to be transferred is 1 byte
0000 = Transfer complete

19.4.4.3 DMABCH and DMABCL

The DMABCH and DMABCL register pair forms a 10-bit Byte Count register, which is used by the SPI DMA module to send/receive up to 1,024 bytes for each DMA transaction. When the DMA module is actively running (DMAEN = 1), the DMA Byte Count register decrements after each byte is transmitted/received. The DMA transaction will halt, and the DMAEN bit will be automatically cleared by hardware after the last byte has completed. After a DMA transaction is complete, the DMABC register will read 0x000.

Prior to initiating a DMA transaction by setting the DMAEN bit, user firmware should load the appropriate value into the DMABCH/DMABCL registers. The DMABC is a "base zero" counter, so the actual number of bytes, which will be transmitted, follows in Equation 19-1.

For example, if user firmware wants to transmit 7 bytes in one transaction, DMABC should be loaded with 006h. Similarly, if user firmware wishes to transmit 1,024 bytes, DMABC should be loaded with 3FFh.

EQUATION 19-1: BYTES TRANSMITTED FOR A GIVEN DMABC

$$Bytes_{XMIT} \equiv (DMABC + 1)$$

19.4.4.4 TXADDRH and TXADDRL

The TXADDRH and TXADDRL registers pair together to form a 12-bit Transmit Source Address Pointer register. In modes that use TXADDR (Full-Duplex and Half-Duplex Transmit), the TXADDR will be incremented after each byte is transmitted. Transmitted data bytes will be taken from the memory location pointed to by the TXADDR register. The contents of the memory locations pointed to by TXADDR will not be modified by the DMA module during a transmission.

The SPI DMA module can read from and transmit data from all general purpose memory on the device, including memory used for USB endpoint buffers. The SPI DMA module cannot be used to read from the Special Function Registers (SFRs) contained in Banks 14 and 15.

19.4.4.5 RXADDRH and RXADDRL

The RXADDRH and RXADDRL register pair together to form a 12-bit Receive Destination Address Pointer. In modes that use RXADDR (Full-Duplex and Half-Duplex Receive), the RXADDR register will be incremented after each byte is received. Received data bytes will be stored at the memory location pointed to by the RXADDR register.

The SPI DMA module can write received data to all general purpose memory on the device, including memory used for USB endpoint buffers. The SPI DMA module cannot be used to modify the Special Function Registers contained in Banks 14 and 15.

19.4.5 INTERRUPTS

The SPI DMA module alters the behavior of the SSP2IF interrupt flag. In normal/non-DMA modes, the SSP2IF is set once after every single byte is transmitted/received through the MSSP2 module. When MSSP2 is used with the SPI DMA module, the SSP2IF interrupt flag will be set according to the user-selected INTLVL<3:0> value specified in the DMACON2 register. The SSP2IF interrupt condition will also be generated once the SPI DMA transaction has fully completed and the DMAEN bit has been cleared by hardware.

The SSP2IF flag becomes set once the DMA byte count value indicates that the specified INTLVL has been reached. For example, if DMACON2<3:0> = 0101 (16 bytes remaining), the SSP2IF interrupt flag will become set once DMABC reaches 00Fh. If user firmware then clears the SSP2IF interrupt flag, the flag will not be set again by the hardware until after all bytes have been fully transmitted and the DMA transaction is complete.

Note:	User firmware may modify the INTLVL bits while a DMA transaction is in progress (DMAEN = 1). If an INTLVL value is selected which is higher than the actual remaining number of bytes (indicated by DMABC + 1), the SSP2IF interrupt flag will immediately become set.

For example, if DMABC = 00Fh (implying 16 bytes are remaining) and user firmware writes '1111' to INTLVL<3:0> (interrupt when 576 bytes are remaining), the SSP2IF interrupt flag will immediately become set. If user firmware clears this interrupt flag, a new interrupt condition will not be generated until either: user firmware again writes INTLVL with an interrupt level higher than the actual remaining level, or the DMA transaction completes and the DMAEN bit is cleared.

Note:	If the INTLVL bits are modified while a DMA transaction is in progress, care should be taken to avoid inadvertently changing the DLYCYC<3:0> value.

© 2011 Microchip Technology Inc.

19.4.6 USING THE SPI DMA MODULE

The following steps would typically be taken to enable and use the SPI DMA module:

1. Configure the I/O pins, which will be used by MSSP2:
   a) Assign SCK2, SDO2, SDI2 and $\overline{SS2}$ to RPn pins as appropriate for the SPI mode which will be used. Only functions which will be used need to be assigned to a pin.
   b) Initialize the associated LATx registers for the desired Idle SPI bus state.
   c) If Open-Drain Output mode on SDO2 and SCK2 (Master mode) is desired, set ODCON3<1>.
   d) Configure corresponding TRISx bits for each I/O pin used.
2. Configure and enable MSSP2 for the desired SPI operating mode:
   a) Select the desired operating mode (Master or Slave, SPI Mode 0, 1, 2 and 3) and configure the module by writing to the SSP2STAT and SSP2CON1 registers.
   b) Enable MSSP2 by setting SSP2CON1<5> = 1.
3. Configure the SPI DMA engine.:
   a) Select the desired operating mode by writing the appropriate values to DMACON2 and DMACON1.
   b) Initialize the TXADDRH/TXADDRL Pointer (Full-Duplex or Half-Duplex Transmit Only mode).
   c) Initialize the RXADDRH/RXADDRL Pointer (Full-Duplex or Half-Duplex Receive Only mode).
   d) Initialize the DMABCH/DMABCL Byte Count register with the number of bytes to be transferred in the next SPI DMA operation.
   e) Set the DMAEN bit (DMACON1<0>).

   In SPI Master modes, this will initiate a DMA transaction. In SPI Slave modes, this will complete the initialization process, and the module will now be ready to begin receiving and/or transmitting data to the master device once the master starts the transaction.
4. Detect the SSP2IF interrupt condition (PIR3<7>):
   a) If the interrupt was configured to occur at the completion of the SPI DMA transaction, the DMAEN bit (DMACON1<0>) will be clear. User firmware may prepare the module for another transaction by repeating Steps 3.b through 3.e.
   b) If the interrupt was configured to occur prior to the completion of the SPI DMA transaction, the DMAEN bit may still be set, indicating the transaction is still in progress. User firmware would typically use this interrupt condition to begin preparing new data for the next DMA transaction. Firmware should not repeat Steps 3.b. through 3.e. until the DMAEN bit is cleared by the hardware, indicating the transaction is complete.

Example 19-2 provides example code demonstrating the initialization process and the steps needed to use the SPI DMA module to perform a 512-byte Full-Duplex, Master mode transfer.

EXAMPLE 19-2: 512-BYTE SPI MASTER MODE `Init` AND TRANSFER

```
                                ;For this example, let's use RP5(RB2) for SCK2,
                                ;RP4(RB1) for SDO2, and RP3(RB0) for SDI2

                                ;Let’s use SPI master mode, CKE = 0, CKP = 0,
                                ;without using slave select signalling.

InitSPIPins:
   movlb     0x0F               ;Select bank 15, for access to ODCON3 register
   bcf       ODCON3, SPI2OD     ;Let’s not use open drain outputs in this example

   bcf       LATB, RB2          ;Initialize our (to be) SCK2 pin low (idle).
   bcf       LATB, RB1          ;Initialize our (to be) SDO2 pin to an idle state
   bcf       TRISB, RB1         ;Make SDO2 output, and drive low
   bcf       TRISB, RB2         ;Make SCK2 output, and drive low (idle state)
   bsf       TRISB, RB0         ;SDI2 is an input, make sure it is tri-stated

                                ;Now we should unlock the PPS registers, so we can
                                ;assign the MSSP2 functions to our desired I/O pins.

   movlb     0x0E               ;Select bank 14 for access to PPS registers
   bcf       INTCON, GIE        ;I/O Pin unlock sequence will not work if CPU
                                ;services an interrupt during the sequence
   movlw     0x55               ;Unlock sequence consists of writing 0x55
   movwf     EECON2             ;and 0xAA to the EECON2 register.
   movlw     0xAA
   movwf     EECON2
   bcf       PPSCON, IOLOCK     ;We may now write to RPINRx and RPORx registers
   bsf       INTCON, GIE        ;May now turn back on interrupts if desired

   movlw     0x03               ;RP3 will be SDI2
   movwf     RPINR21            ;Assign the SDI2 function to pin RP3

   movlw     0x0A               ;Let’s assign SCK2 output to pin RP4
   movwf     RPOR4              ;RPOR4 maps output signals to RP4 pin
   movlw     0x04               ;SCK2 also needs to be configured as an input on the
                                same pin
   movwf     RPINR22            ;SCK2 input function taken from RP4 pin
   movlw     0x09               ;0x09 is SDO2 output
   movwf     RPOR5              ;Assign SDO2 output signal to the RP5 (RB2) pin
   movlb     0x0F               ;Done with PPS registers, bank 15 has other SFRs

InitMSSP2:
   clrf      SSP2STAT           ;CKE = 0, SMP = 0 (sampled at middle of bit)
   movlw     b'00000000'        ;CKP = 0, SPI Master mode, Fosc/4
   movwf     SSP2CON1           ;MSSP2 initialized
   bsf       SSP2CON1, SSPEN    ;Enable the MSSP2 module

InitSPIDMA:
   movlw     b'00111010'        ;Full duplex, RX/TXINC enabled, no SSCON
   movwf     DMACON1            ;DLYINTEN is set, so DLYCYC3:DLYCYC0 = 1111
   movlw     b'11110000'        ;Minimum delay between bytes, interrupt
   movwf     DMACON2            ;only once when the transaction is complete
```


© 2011 Microchip Technology Inc.

EXAMPLE 19-2: 512-BYTE SPI MASTER MODE `Init` AND TRANSFER (CONTINUED)

```
                                    ;Somewhere else in our project, lets assume we have
                                    ;allocated some RAM for use as SPI receive and
                                    ;transmit buffers.

;            udata     0x500
;DestBuf     res       0x200       ;Let's reserve 0x500-0x6FF for use as our SPI
;                                   ;receive data buffer in this example
;SrcBuf      res       0x200       ;Lets reserve 0x700-0x8FF for use as our SPI
;                                   ;transmit data buffer in this example

PrepareTransfer:
   movlw     HIGH(DestBuf)          ;Get high byte of DestBuf address (0x05)
   movwf     RXADDRH                ;Load upper four bits of the RXADDR register
   movlw     LOW(DestBuf)           ;Get low byte of the DestBuf address (0x00)
   movwf     RXADDRL                ;Load lower eight bits of the RXADDR register

   movlw     HIGH(SrcBuf)           ;Get high byte of SrcBuf address (0x07)
   movwf     TXADDRH                ;Load upper four bits of the TXADDR register
   movlw     LOW(SrcBuf)            ;Get low byte of the SrcBuf address (0x00)
   movwf     TXADDRL                ;Load lower eight bits of the TXADDR register

   movlw     0x01                   ;Lets move 0x200 (512) bytes in one DMA xfer
   movwf     DMABCH                 ;Load the upper two bits of DMABC register
   movlw     0xFF                   ;Actual bytes transferred is (DMABC + 1), so
   movwf     DMABCL                 ;we load 0x01FF into DMABC to xfer 0x200 bytes

BeginXfer:
   bsf       DMACON1, DMAEN         ;The SPI DMA module will now begin transferring
                                    ;the data taken from SrcBuf, and will store
                                    ;received bytes into DestBuf.

   ;Execute whatever               ;CPU is now free to do whatever it wants to
                                    ;and the DMA operation will continue without
                                    ;intervention, until it completes.

                                    ;When the transfer is complete, the SSP2IF flag in
                                    ;the PIR3 register will become set, and the DMAEN bit
                                    ;is automatically cleared by the hardware.
                                    ;The DestBuf (0x500-0x7FF) will contain the received
                                    ;data.  To start another transfer, firmware will need
                                    ;to reinitialize RXADDR, TXADDR, DMABC and then
                                    ;set the DMAEN bit.
```

19.5 I²C Mode

The MSSP module in I²C mode fully implements all master and slave functions (including general call support), and provides interrupts on Start and Stop bits in hardware to determine a free bus (multi-master function). The MSSP module implements the standard mode specifications and 7-bit and 10-bit addressing.

Two pins are used for data transfer:

- Serial Clock (SCLx) – RB4/PMA1/KBI0/SCK1/SCL1/RP7 or RD0/PMD0/SCL2
- Serial Data (SDAx) – RB5/PMA0/KBI1/SDI1/SDA1/RP8 or RD1/PMD1/SDA2

The user must configure these pins as inputs by setting the associated TRIS bits. These pins are up to 5.5V tolerant, allowing direct use in I²C busses operating at voltages higher than VDD.

FIGURE 19-7: MSSPx BLOCK DIAGRAM (I²C™ MODE)

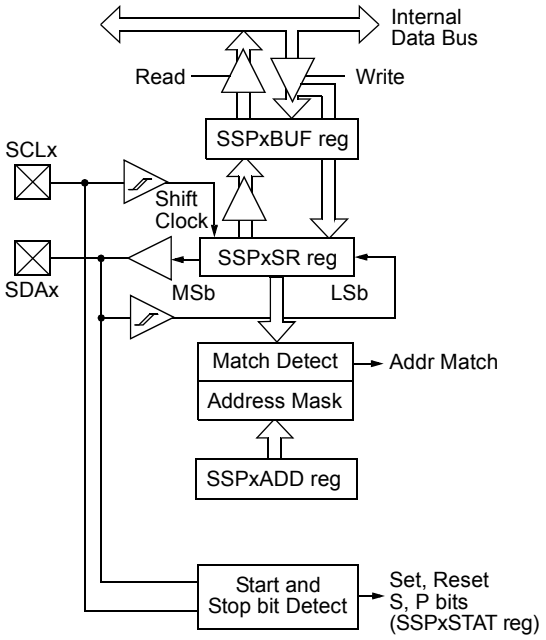

Note: Only port I/O names are used in this diagram for the sake of brevity. Refer to the text for a full list of multiplexed functions.

19.5.1 REGISTERS

The MSSP module has six registers for I²C operation. These are:

- MSSPx Control Register 1 (SSPxCON1)
- MSSPx Control Register 2 (SSPxCON2)
- MSSPx Status Register (SSPxSTAT)
- Serial Receive/Transmit Buffer Register (SSPxBUF)
- MSSPx Shift Register (SSPxSR) – Not directly accessible
- MSSPx Address Register (SSPxADD)
- MSSPx 7-Bit Address Mask Register (SSPxMSK)

SSPxCON1, SSPxCON2 and SSPxSTAT are the control and status registers in I²C mode operation. The SSPxCON1 and SSPxCON2 registers are readable and writable. The lower six bits of the SSPxSTAT are read-only. The upper two bits of the SSPxSTAT are read/write.

SSPxSR is the shift register used for shifting data in or out. SSPxBUF is the buffer register to which data bytes are written to or read from.

SSPxADD contains the slave device address when the MSSP is configured in I²C Slave mode. When the MSSP is configured in Master mode, the lower seven bits of SSPxADD act as the Baud Rate Generator (BRG) reload value.

SSPxMSK holds the slave address mask value when the module is configured for 7-Bit Address Masking mode. While it is a separate register, it shares the same SFR address as SSPxADD; it is only accessible when the SSPM<3:0> bits are specifically set to permit access. Additional details are provided in **Section 19.5.3.4 “7-Bit Address Masking Mode”**.

In receive operations, SSPxSR and SSPxBUF together, create a double-buffered receiver. When SSPxSR receives a complete byte, it is transferred to SSPxBUF and the SSPxIF interrupt is set.

During transmission, the SSPxBUF is not double-buffered. A write to SSPxBUF will write to both SSPxBUF and SSPxSR.

© 2011 Microchip Technology Inc.

REGISTER 19-5: SSPxSTAT: MSSPx STATUS REGISTER (I^2C™ MODE) (ACCESS FC7h, F73h)

R/W-0	R/W-0	R-0	R-0	R-0	R-0	R-0	R-0
SMP	CKE	D/$\overline{A}$	P(1)	S(1)	R/$\overline{W}$(2,3)	UA	BF
bit 7							bit 0

Legend:			
R = Readable bit	W = Writable bit	U = Unimplemented bit, read as '0'	
-n = Value at POR	'1' = Bit is set	'0' = Bit is cleared	x = Bit is unknown

bit 7 **SMP:** Slew Rate Control bit

In Master or Slave mode:
1 = Slew rate control is disabled for Standard Speed mode (100 kHz and 1 MHz)
0 = Slew rate control is enabled for High-Speed mode (400 kHz)

bit 6 **CKE:** SMBus Select bit

In Master or Slave mode:
1 = Enable SMBus-specific inputs
0 = Disable SMBus-specific inputs

bit 5 **D/$\overline{A}$:** Data/$\overline{\text{Address}}$ bit

In Master mode:
Reserved.

In Slave mode:
1 = Indicates that the last byte received or transmitted was data
0 = Indicates that the last byte received or transmitted was address

bit 4 **P:** Stop bit(1)

1 = Indicates that a Stop bit has been detected last
0 = Stop bit was not detected last

bit 3 **S:** Start bit(1)

1 = Indicates that a Start bit has been detected last
0 = Start bit was not detected last

bit 2 **R/$\overline{W}$:** Read/$\overline{\text{Write}}$ Information bit(2,3)

In Slave mode:
1 = Read
0 = Write

In Master mode:
1 = Transmit is in progress
0 = Transmit is not in progress

bit 1 **UA:** Update Address bit (10-Bit Slave mode only)

1 = Indicates that the user needs to update the address in the SSPxADD register
0 = Address does not need to be updated

bit 0 **BF:** Buffer Full Status bit

In Transmit mode:
1 = SSPxBUF is full
0 = SSPxBUF is empty

In Receive mode:
1 = SSPxBUF is full (does not include the $\overline{\text{ACK}}$ and Stop bits)
0 = SSPxBUF is empty (does not include the $\overline{\text{ACK}}$ and Stop bits)

Note 1: This bit is cleared on Reset and when SSPEN is cleared.

2: This bit holds the R/$\overline{W}$ bit information following the last address match. This bit is only valid from the address match to the next Start bit, Stop bit or not $\overline{\text{ACK}}$ bit.

3: ORing this bit with SEN, RSEN, PEN, RCEN or ACKEN will indicate if the MSSPx is in Active mode.

REGISTER 19-6: SSPxCON1: MSSPx CONTROL REGISTER 1 (I^2C™ MODE) (ACCESS FC6h, F72h)

R/W-0	R/C-0	R/W-0	R/W-0	R/W-0	R/W-0	R/W-0	R/W-0
WCOL	SSPOV	SSPEN(1)	CKP	SSPM3(2)	SSPM2(2)	SSPM1(2)	SSPM0(2)
bit 7							bit 0

Legend:	C = Clearable bit		
R = Readable bit	W = Writable bit	U = Unimplemented bit, read as '0'	
-n = Value at POR	'1' = Bit is set	'0' = Bit is cleared	x = Bit is unknown

bit 7 **WCOL:** Write Collision Detect bit

In Master Transmit mode:

1 = A write to the SSPxBUF register was attempted while the I^2C conditions were not valid for a transmission to be started (must be cleared in software)

0 = No collision

In Slave Transmit mode:

1 = The SSPxBUF register is written while it is still transmitting the previous word (must be cleared in software)

0 = No collision

In Receive mode (Master or Slave modes):

This is a "don't care" bit.

bit 6 **SSPOV:** Receive Overflow Indicator bit

In Receive mode:

1 = A byte is received while the SSPxBUF register is still holding the previous byte (must be cleared in software)

0 = No overflow

In Transmit mode:

This is a "don't care" bit in Transmit mode.

bit 5 **SSPEN:** Master Synchronous Serial Port Enable bit(1)

1 = Enables the serial port and configures the SDAx and SCLx pins as the serial port pins

0 = Disables serial port and configures these pins as I/O port pins

bit 4 **CKP:** SCKx Release Control bit

In Slave mode:

1 = Releases clock

0 = Holds clock low (clock stretch); used to ensure data setup time

In Master mode:

Unused in this mode.

bit 3-0 **SSPM<3:0>:** Master Synchronous Serial Port Mode Select bits(2)

1111 = I^2C Slave mode, 10-bit address with Start and Stop bit interrupts enabled

1110 = I^2C Slave mode, 7-bit address with Start and Stop bit interrupts enabled

1011 = I^2C Firmware Controlled Master mode (slave Idle)

1001 = Load SSPxMSK register at SSPxADD SFR address(3,4)

1000 = I^2C Master mode, Clock = FOSC/(4 * (SSPxADD + 1))

0111 = I^2C Slave mode, 10-bit address

0110 = I^2C Slave mode, 7-bit address

Note 1: When enabled, the SDAx and SCLx pins must be configured as inputs.

2: Bit combinations not specifically listed here are either reserved or implemented in SPI mode only.

3: When SSPM<3:0> = 1001, any reads or writes to the SSPxADD SFR address actually accesses the SSPxMSK register.

4: This mode is only available when 7-Bit Address Masking mode is selected (MSSPMSK Configuration bit is '1').

© 2011 Microchip Technology Inc.

REGISTER 19-7: SSPxCON2: MSSPx CONTROL REGISTER 2 (I^2C™ MASTER MODE) (ACCESS FC5h, F71h)

R/W-0	R-0	R/W-0	R/W-0	R/W-0	R/W-0	R/W-0	R/W-0
GCEN(3)	ACKSTAT	ACKDT(1)	ACKEN(2)	RCEN(2)	PEN(2)	RSEN(2)	SEN(2)
bit 7							bit 0

Legend:			
R = Readable bit	W = Writable bit	U = Unimplemented bit, read as '0'	
-n = Value at POR	'1' = Bit is set	'0' = Bit is cleared	x = Bit is unknown

bit 7 **GCEN:** General Call Enable bit (Slave mode only)(3)
1 = Enable interrupt when a general call address (0000h) is received in the SSPxSR
0 = General call address is disabled

bit 6 **ACKSTAT:** Acknowledge Status bit (Master Transmit mode only)
1 = Acknowledge was not received from slave
0 = Acknowledge was received from slave

bit 5 **ACKDT:** Acknowledge Data bit (Master Receive mode only)(1)
1 = Not Acknowledged
0 = Acknowledge

bit 4 **ACKEN:** Acknowledge Sequence Enable bit(2)
1 = Initiates Acknowledge sequence on SDAx and SCLx pins and transmits ACKDT data bit; automatically cleared by hardware
0 = Acknowledge sequence is Idle

bit 3 **RCEN:** Receive Enable bit (Master Receive mode only)(2)
1 = Enables Receive mode for I^2C
0 = Receive is Idle

bit 2 **PEN:** Stop Condition Enable bit(2)
1 = Initiates Stop condition on SDAx and SCLx pins; automatically cleared by hardware
0 = Stop condition is Idle

bit 1 **RSEN:** Repeated Start Condition Enable bit(2)
1 = Initiates Repeated Start condition on SDAx and SCLx pins; automatically cleared by hardware
0 = Repeated Start condition is Idle

bit 0 **SEN:** Start Condition Enable bit(2)
1 = Initiates Start condition on SDAx and SCLx pins; automatically cleared by hardware
0 = Start condition is Idle

Note 1: Value that will be transmitted when the user initiates an Acknowledge sequence at the end of a receive.
2: If the I^2C module is active, these bits may not be set (no spooling) and the SSPxBUF may not be written (or writes to the SSPxBUF are disabled).
3: This bit is not implemented in I^2C Master mode.

REGISTER 19-8: SSPxCON2: MSSPx CONTROL REGISTER 2 (I^2C™ SLAVE MODE) (ACCESS FC5h, F71h)

R/W-0	R-0	R/W-0	R/W-0	R/W-0	R/W-0	R/W-0	R/W-0
GCEN	ACKSTAT(2)	ADMSK5	ADMSK4	ADMSK3	ADMSK2	ADMSK1	SEN(1)
bit 7							bit 0

Legend:			
R = Readable bit	W = Writable bit	U = Unimplemented bit, read as '0'	
-n = Value at POR	'1' = Bit is set	'0' = Bit is cleared	x = Bit is unknown

bit 7 **GCEN:** General Call Enable bit (Slave mode only)
1 = Enables interrupt when a general call address (0000h) is received in the SSPxSR
0 = General call address is disabled

bit 6 **ACKSTAT:** Acknowledge Status bit(2)
Unused in Slave mode.

bit 5-2 **ADMSK<5:2>:** Slave Address Mask Select bits (5-Bit Address Masking)
1 = Masking of corresponding bits of SSPxADD is enabled
0 = Masking of corresponding bits of SSPxADD is disabled

bit 1 **ADMSK1:** Slave Address Least Significant bit(s) Mask Select bit
In 7-Bit Addressing mode:
1 = Masking of SSPxADD<1> only is enabled
0 = Masking of SSPxADD<1> only is disabled
In 10-Bit Addressing mode:
1 = Masking of SSPxADD<1:0> is enabled
0 = Masking of SSPxADD<1:0> is disabled

bit 0 **SEN:** Start Condition Enable/Stretch Enable bit(1)
1 = Clock stretching is enabled for both slave transmit and slave receive (stretch enabled)
0 = Clock stretching is disabled

Note 1: If the I^2C module is active, these bits may not be set (no spooling) and the SSPxBUF may not be written (or writes to the SSPxBUF are disabled).
2: This bit is unimplemented in I^2C Slave mode.

REGISTER 19-9: SSPxMSK: I^2C™ SLAVE ADDRESS MASK REGISTER (7-BIT MASKING MODE) (ACCESS FC8h, F74h)(1)

R/W-1	R/W-1	R/W-1	R/W-1	R/W-1	R/W-1	R/W-1	R/W-1
MSK7	MSK6	MSK5	MSK4	MSK3	MSK2	MSK1	MSK0(2)
bit 7							bit 0

Legend:			
R = Readable bit	W = Writable bit	U = Unimplemented bit, read as '0'	
-n = Value at POR	'1' = Bit is set	'0' = Bit is cleared	x = Bit is unknown

bit 7-0 **MSK<7:0>:** Slave Address Mask Select bits
1 = Masking of corresponding bit of SSPxADD is enabled
0 = Masking of corresponding bit of SSPxADD is disabled

Note 1: This register shares the same SFR address as SSPxADD and is only addressable in select MSSP operating modes. See **Section 19.5.3.4 "7-Bit Address Masking Mode"** for more details.
2: MSK0 is not used as a mask bit in 7-bit addressing.

© 2011 Microchip Technology Inc.

19.5.2 OPERATION

The MSSP module functions are enabled by setting the MSSP Enable bit, SSPEN (SSPxCON1<5>).

The SSPxCON1 register allows control of the I^2C operation. Four mode selection bits (SSPxCON1<3:0>) allow one of the following I^2C modes to be selected:

- I^2C Master mode, clock
- I^2C Slave mode (7-bit address)
- I^2C Slave mode (10-bit address)
- I^2C Slave mode (7-bit address) with Start and Stop bit interrupts enabled
- I^2C Slave mode (10-bit address) with Start and Stop bit interrupts enabled
- I^2C Firmware Controlled Master mode, slave is Idle

Selection of any I^2C mode with the SSPEN bit set forces the SCLx and SDAx pins to be open-drain, provided these pins are programmed as inputs by setting the appropriate TRISB or TRISD bits. To ensure proper operation of the module, pull-up resistors must be provided externally to the SCLx and SDAx pins.

19.5.3 SLAVE MODE

In Slave mode, the SCLx and SDAx pins must be configured as inputs (TRISB<5:4> set). The MSSP module will override the input state with the output data when required (slave-transmitter).

The I^2C Slave mode hardware will always generate an interrupt on an address match. Address masking will allow the hardware to generate an interrupt for more than one address (up to 31 in 7-bit addressing and up to 63 in 10-bit addressing). Through the mode select bits, the user can also choose to interrupt on Start and Stop bits.

When an address is matched, or the data transfer after an address match is received, the hardware automatically will generate the Acknowledge ($\overline{ACK}$) pulse and load the SSPxBUF register with the received value currently in the SSPxSR register.

Any combination of the following conditions will cause the MSSP module not to give this $\overline{ACK}$ pulse:

- The Buffer Full bit, BF (SSPxSTAT<0>), was set before the transfer was received.
- The overflow bit, SSPOV (SSPxCON1<6>), was set before the transfer was received.

In this case, the SSPxSR register value is not loaded into the SSPxBUF, but bit SSPxIF is set. The BF bit is cleared by reading the SSPxBUF register, while bit SSPOV is cleared through software.

The SCLx clock input must have a minimum high and low for proper operation. The high and low times of the I^2C specification, as well as the requirement of the MSSP module, are shown in timing Parameter 100 and Parameter 101.

19.5.3.1 Addressing

Once the MSSP module has been enabled, it waits for a Start condition to occur. Following the Start condition, the 8 bits are shifted into the SSPxSR register. All incoming bits are sampled with the rising edge of the clock (SCLx) line. The value of register, SSPxSR<7:1>, is compared to the value of the SSPxADD register. The address is compared on the falling edge of the eighth clock (SCLx) pulse. If the addresses match and the BF and SSPOV bits are clear, the following events occur:

1. The SSPxSR register value is loaded into the SSPxBUF register.
2. The Buffer Full bit, BF, is set.
3. An $\overline{ACK}$ pulse is generated.
4. The MSSPx Interrupt Flag bit, SSPxIF, is set (and interrupt is generated, if enabled) on the falling edge of the ninth SCLx pulse.

In 10-Bit Addressing mode, two address bytes need to be received by the slave. The five Most Significant bits (MSbs) of the first address byte specify if this is a 10-bit address. Bit, R/$\overline{W}$ (SSPxSTAT<2>), must specify a write so the slave device will receive the second address byte. For a 10-bit address, the first byte would equal '11110 A9 A8 0', where 'A9' and 'A8' are the two MSbs of the address. The sequence of events for 10-bit addressing is as follows, with Steps 7 through 9 for the slave-transmitter:

1. Receive first (high) byte of address (bits, SSPxIF, BF and UA, are set on address match).
2. Update the SSPxADD register with second (low) byte of address (clears bit, UA, and releases the SCLx line).
3. Read the SSPxBUF register (clears bit, BF) and clear flag bit, SSPxIF.
4. Receive second (low) byte of address (bits, SSPxIF, BF and UA, are set).
5. Update the SSPxADD register with the first (high) byte of address. If match releases SCLx line, this will clear bit, UA.
6. Read the SSPxBUF register (clears bit, BF) and clear flag bit, SSPxIF.
7. Receive Repeated Start condition.
8. Receive first (high) byte of address (bits, SSPxIF and BF, are set).
9. Read the SSPxBUF register (clears bit, BF) and clear flag bit, SSPxIF.

19.5.3.2 Address Masking Modes

Masking an address bit causes that bit to become a "don't care". When one address bit is masked, two addresses will be Acknowledged and cause an interrupt. It is possible to mask more than one address bit at a time, which greatly expands the number of addresses Acknowledged.

The I^2C slave behaves the same way, whether address masking is used or not. However, when address masking is used, the I^2C slave can Acknowledge multiple addresses and cause interrupts. When this occurs, it is necessary to determine which address caused the interrupt by checking SSPxBUF.

The PIC18F46J50 family of devices is capable of using two different Address Masking modes in I^2C slave operation: 5-Bit Address Masking and 7-Bit Address Masking. The Masking mode is selected at device configuration using the MSSPMSK Configuration bit. The default device configuration is 7-Bit Address Masking.

Both Masking modes, in turn, support address masking of 7-bit and 10-bit addresses. The combination of Masking modes and addresses provide different ranges of Acknowledgable addresses for each combination.

While both Masking modes function in roughly the same manner, the way they use address masks is different.

19.5.3.3 5-Bit Address Masking Mode

As the name implies, 5-Bit Address Masking mode uses an address mask of up to five bits to create a range of addresses to be Acknowledged, using bits, 5 through 1, of the incoming address. This allows the module to Acknowledge up to 31 addresses when using 7-bit addressing, or 63 addresses with 10-bit addressing (see Example 19-3). This Masking mode is selected when the MSSPMSK Configuration bit is programmed ('0').

The address mask in this mode is stored in the SSPxCON2 register, which stops functioning as a control register in I^2C Slave mode (Register 19-8). In 7-Bit Address Masking mode, address mask bits, ADMSK<5:1> (SSPxCON2<5:1>), mask the corresponding address bits in the SSPxADD register. For any ADMSK bits that are set (ADMSK<n> = 1), the corresponding address bit is ignored (SSPxADD<n> = x). For the module to issue an address Acknowledge, it is sufficient to match only on addresses that do not have an active address mask.

In 10-Bit Address Masking mode, bits, ADMSK<5:2>, mask the corresponding address bits in the SSPxADD register. In addition, ADMSK1 simultaneously masks the two LSbs of the address (SSPxADD<1:0>). For any ADMSK bits that are active (ADMSK<n> = 1), the corresponding address bit is ignored (SPxADD<n> = x). Also note, that although in 10-Bit Address Masking mode, the upper address bits reuse part of the SSPxADD register bits. The address mask bits do not interact with those bits; they only affect the lower address bits.

Note 1: ADMSK1 masks the two Least Significant bits of the address.

2: The two MSbs of the address are not affected by address masking.

EXAMPLE 19-3: ADDRESS MASKING EXAMPLES IN 5-BIT MASKING MODE

7-Bit Addressing:

SSPxADD<7:1> = A0h (1010000) (SSPxADD<0> is assumed to be '0'.)

ADMSK<5:1> = 00111

Addresses Acknowledged: A0h, A2h, A4h, A6h, A8h, AAh, ACh, AEh

10-Bit Addressing:

SSPxADD<7:0> = A0h (10100000) (The two MSbs of the address are ignored in this example, since they are not affected by masking.)

ADMSK<5:1> = 00111

Addresses Acknowledged: A0h, A1h, A2h, A3h, A4h, A5h, A6h, A7h, A8h, A9h, AAh, ABh, ACh, ADh, AEh, AFh

© 2011 Microchip Technology Inc.

19.5.3.4 7-Bit Address Masking Mode

Unlike 5-Bit Address Masking mode, 7-Bit Address Masking mode uses a mask of up to eight bits (in 10-bit addressing) to define a range of addresses than can be Acknowledged, using the lowest bits of the incoming address. This allows the module to Acknowledge up to 127 different addresses with 7-bit addressing, or 255 with 10-bit addressing (see Example 19-4). This mode is the default configuration of the module, and is selected when MSSPMSK is unprogrammed ('1').

The address mask for 7-Bit Address Masking mode is stored in the SSPxMSK register, instead of the SSPxCON2 register. SSPxMSK is a separate hardware register within the module, but it is not directly addressable. Instead, it shares an address in the SFR space with the SSPxADD register. To access the SSPxMSK register, it is necessary to select MSSP mode, '1001' (SSPCON1<3:0> = 1001), and then read or write to the location of SSPxADD.

To use 7-Bit Address Masking mode, it is necessary to initialize SSPxMSK with a value before selecting the I^2C Slave Addressing mode. Thus, the required sequence of events is:

1. Select SSPxMSK Access mode (SSPxCON2<3:0> = 1001).
2. Write the mask value to the appropriate SSPxADD register address (FC8h for MSSP1, F6Eh for MSSP2).
3. Set the appropriate I^2C Slave mode (SSPxCON2<3:0> = 0111 for 10-bit addressing, 0110 for 7-bit addressing).

Setting or clearing mask bits in SSPxMSK behaves in the opposite manner of the ADMSK bits in 5-Bit Address Masking mode. That is, clearing a bit in SSPxMSK causes the corresponding address bit to be masked; setting the bit requires a match in that position. SSPxMSK resets to all '1's upon any Reset condition, and therefore, has no effect on the standard MSSP operation until written with a mask value.

With 7-Bit Address Masking mode, SSPxMSK<7:1> bits mask the corresponding address bits in the SSPxADD register. For any SSPxMSK bits that are active (SSPxMSK<n> = 0), the corresponding SSPxADD address bit is ignored (SSPxADD<n> = x). For the module to issue an address Acknowledge, it is sufficient to match only on addresses that do not have an active address mask.

With 10-Bit Address Masking mode, SSPxMSK<7:0> bits mask the corresponding address bits in the SSPxADD register. For any SSPxMSK bits that are active (= 0), the corresponding SSPxADD address bit is ignored (SSPxADD<n> = x).

Note:	The two MSbs of the address are not affected by address masking.

EXAMPLE 19-4: ADDRESS MASKING EXAMPLES IN 7-BIT MASKING MODE

7-Bit Addressing:

SSPxADD<7:1> = 1010 000

SSPxMSK<7:1> = 1111 001

Addresses Acknowledged = ACh, A8h, A4h, A0h

10-Bit Addressing:

SSPxADD<7:0> = 1010 0000 (The two MSbs are ignored in this example since they are not affected.)

SSPxMSK<7:0> = 1111 0011

Addresses Acknowledged = ACh, A8h, A4h, A0h

19.5.3.5 Reception

When the R/$\overline{W}$ bit of the address byte is clear and an address match occurs, the R/$\overline{W}$ bit of the SSPxSTAT register is cleared. The received address is loaded into the SSPxBUF register and the SDAx line is held low ($\overline{ACK}$).

When the address byte overflow condition exists, then the no Acknowledge ($\overline{ACK}$) pulse is given. An overflow condition is defined as either bit, BF (SSPxSTAT<0>), is set or bit, SSPOV (SSPxCON1<6>), is set.

An MSSP interrupt is generated for each data transfer byte. The interrupt flag bit, SSPxIF, must be cleared in software. The SSPxSTAT register is used to determine the status of the byte.

If SEN is enabled (SSPxCON2<0> = 1), SCLx will be held low (clock stretch) following each data transfer. The clock must be released by setting bit, CKP (SSPxCON1<4>). See **Section 19.5.4 "Clock Stretching"** for more details.

19.5.3.6 Transmission

When the R/$\overline{W}$ bit of the incoming address byte is set and an address match occurs, the R/$\overline{W}$ bit of the SSPxSTAT register is set. The received address is loaded into the SSPxBUF register. The $\overline{ACK}$ pulse will be sent on the ninth bit and pin SCLx is held low regardless of SEN (see **Section 19.5.4 "Clock Stretching"** for more details). By stretching the clock, the master will be unable to assert another clock pulse until the slave is done preparing the transmit data. The transmit data must be loaded into the SSPxBUF register, which also loads the SSPxSR register. Then, the SCLx pin should be enabled by setting bit, CKP (SSPxCON1<4>). The eight data bits are shifted out on the falling edge of the SCLx input. This ensures that the SDAx signal is valid during the SCLx high time (Figure 19-10).

The $\overline{ACK}$ pulse from the master-receiver is latched on the rising edge of the ninth SCLx input pulse. If the SDAx line is high (not $\overline{ACK}$), then the data transfer is complete. In this case, when the $\overline{ACK}$ is latched by the slave, the slave monitors for another occurrence of the Start bit. If the SDAx line was low ($\overline{ACK}$), the next transmit data must be loaded into the SSPxBUF register. Again, the SCLx pin must be enabled by setting bit, CKP.

An MSSP interrupt is generated for each data transfer byte. The SSPxIF bit must be cleared in software and the SSPxSTAT register is used to determine the status of the byte. The SSPxIF bit is set on the falling edge of the ninth clock pulse.

© 2011 Microchip Technology Inc.

FIGURE 19-8: I²C™ SLAVE MODE TIMING WITH SEN = 0 (RECEPTION, 7-BIT ADDRESS)

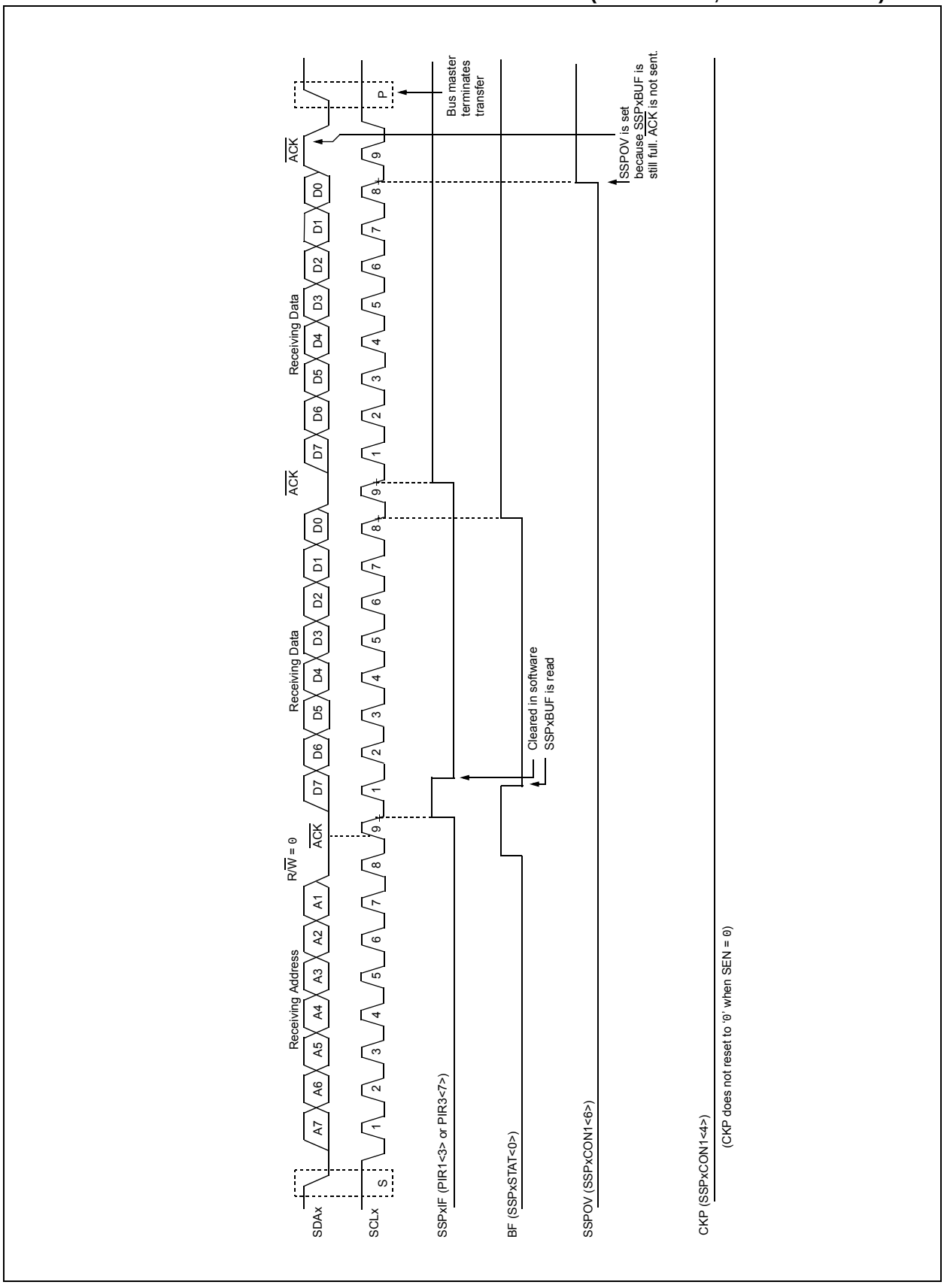

FIGURE 19-9: I²C™ SLAVE MODE TIMING WITH SEN = 0 AND ADMSK<5:1> = 01011 (RECEPTION, 7-BIT ADDRESS)

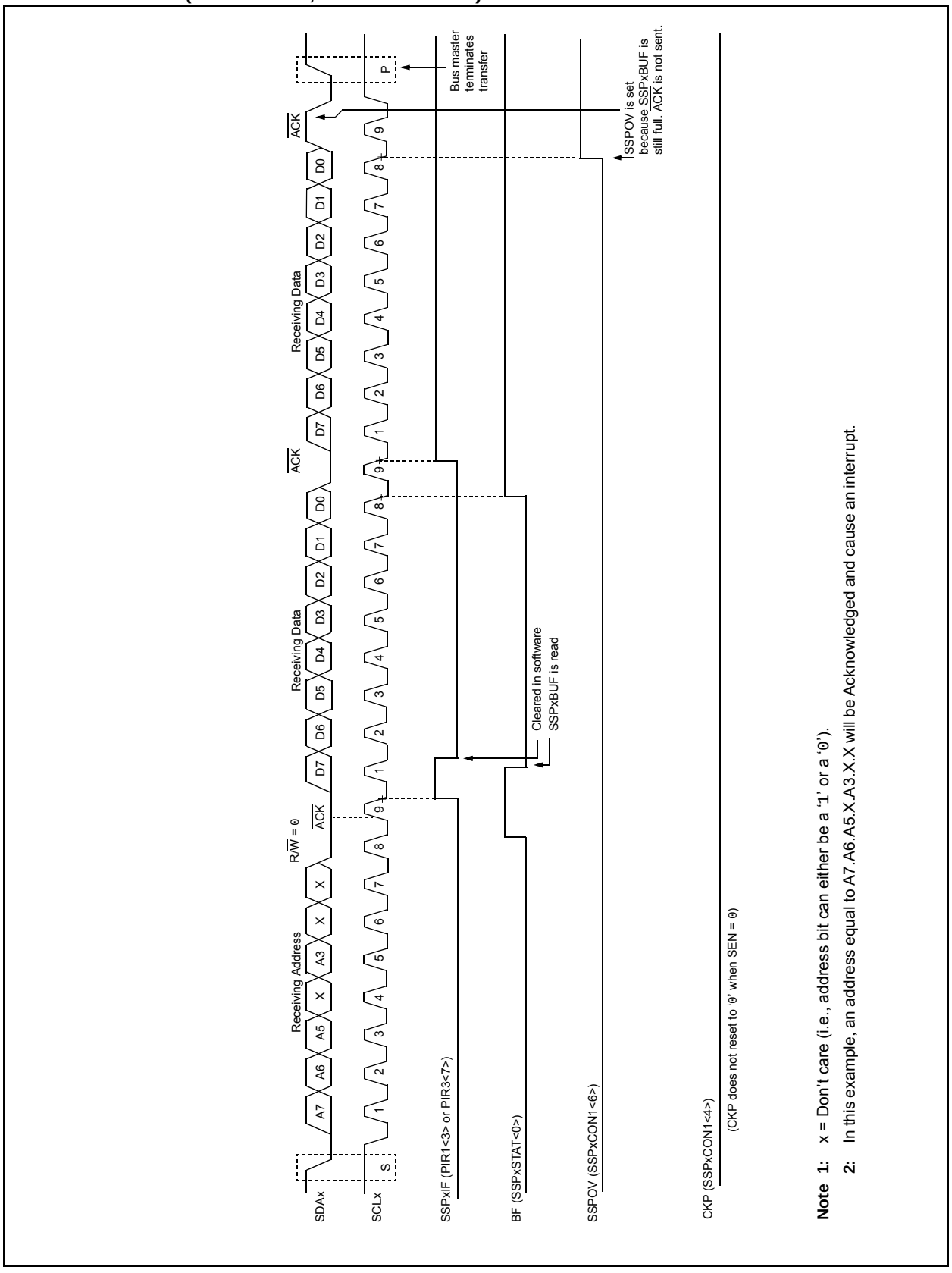

© 2011 Microchip Technology Inc.

FIGURE 19-10: I²C™ SLAVE MODE TIMING (TRANSMISSION, 7-BIT ADDRESS)

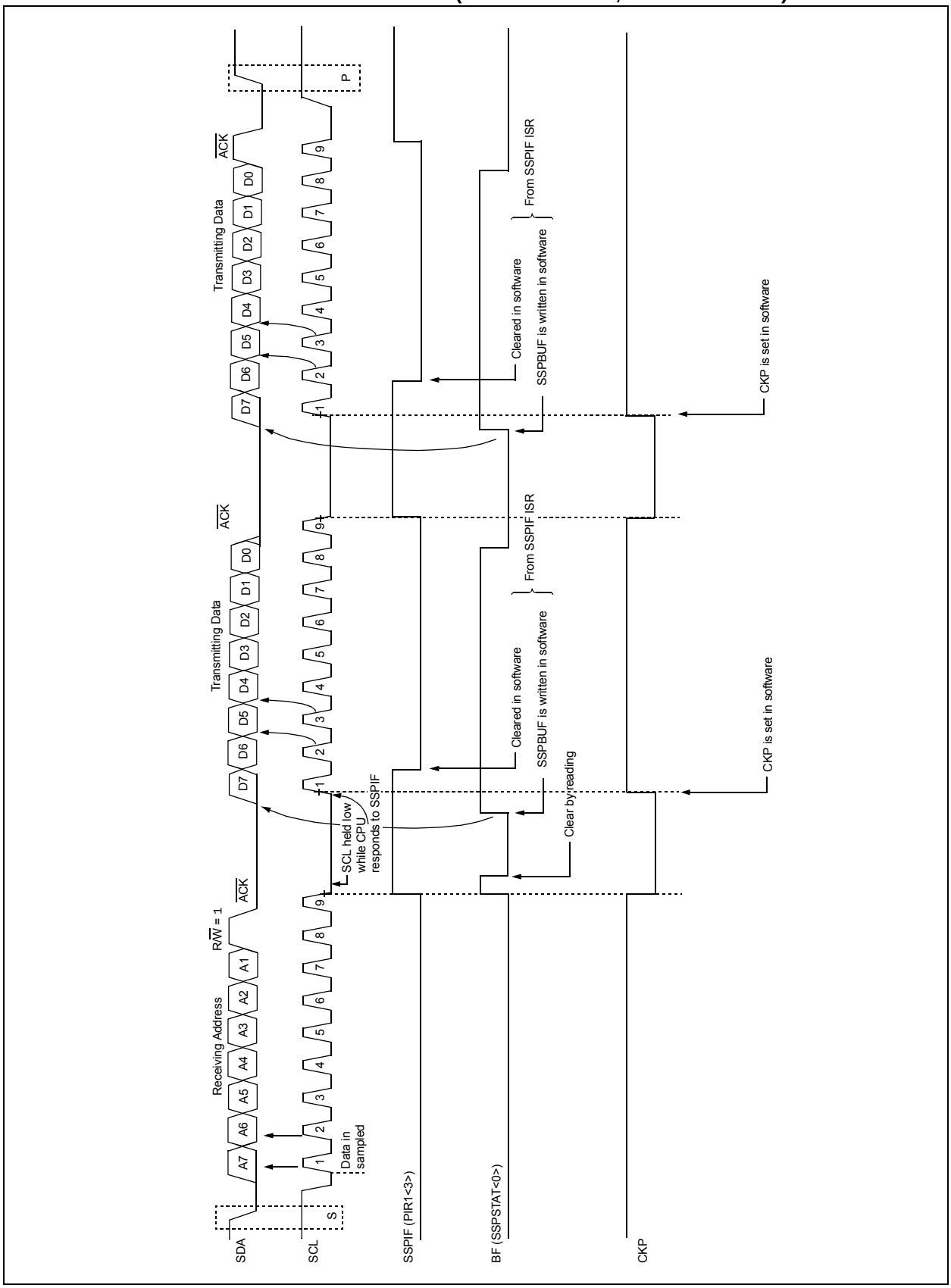

FIGURE 19-11: I²C™ SLAVE MODE TIMING WITH SEN = 0 AND ADMSK<5:1> = 01001 (RECEPTION, 10-BIT ADDRESS)

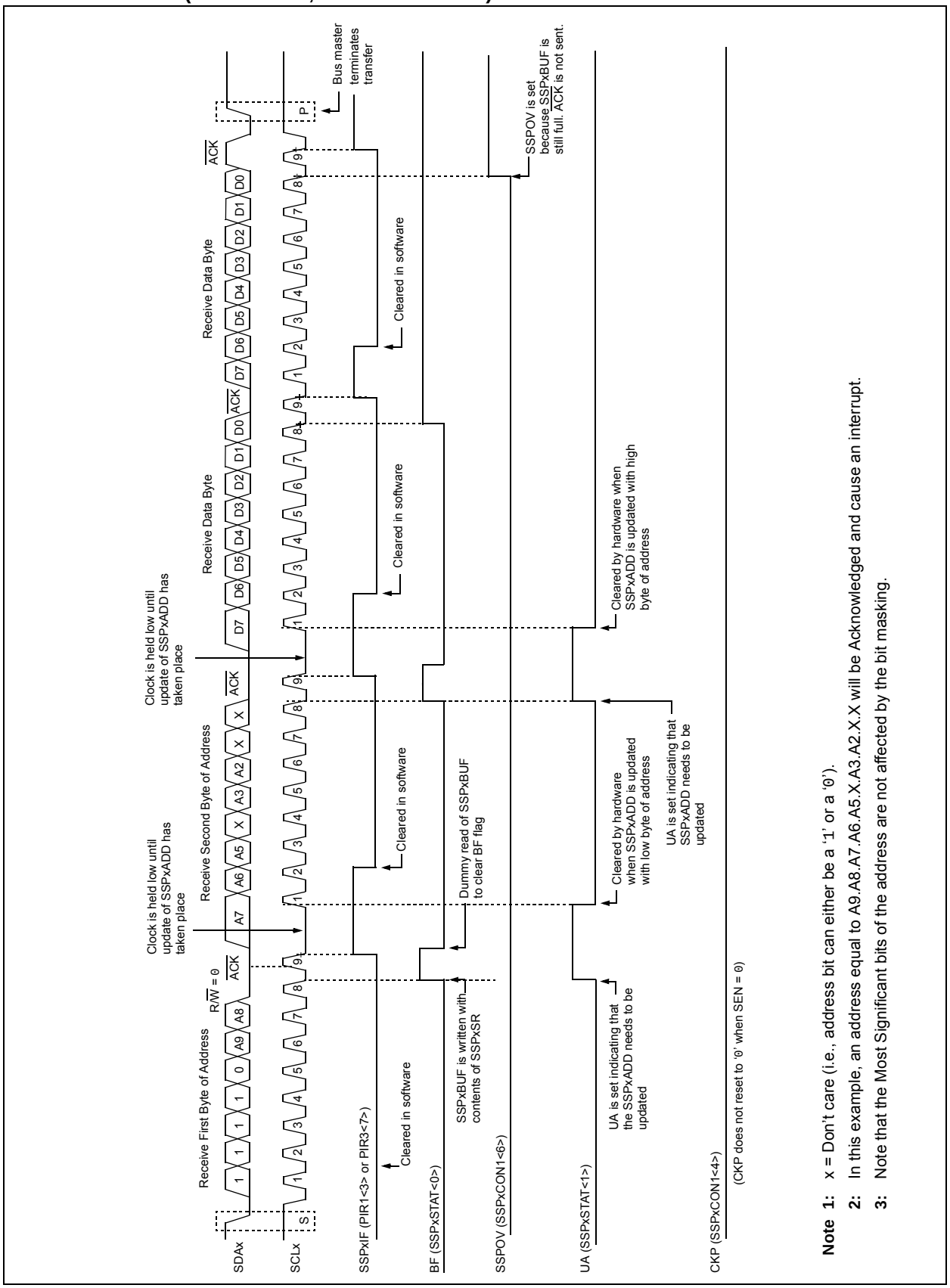

Note 1: x = Don't care (i.e., address bit can either be a '1' or a '0').

2: In this example, an address equal to A9.A8.A7.A6.A5.X.A3.A2.X.X will be Acknowledged and cause an interrupt.

3: Note that the Most Significant bits of the address are not affected by the bit masking.

© 2011 Microchip Technology Inc.

FIGURE 19-12: I²C™ SLAVE MODE TIMING WITH SEN = 0 (RECEPTION, 10-BIT ADDRESS)

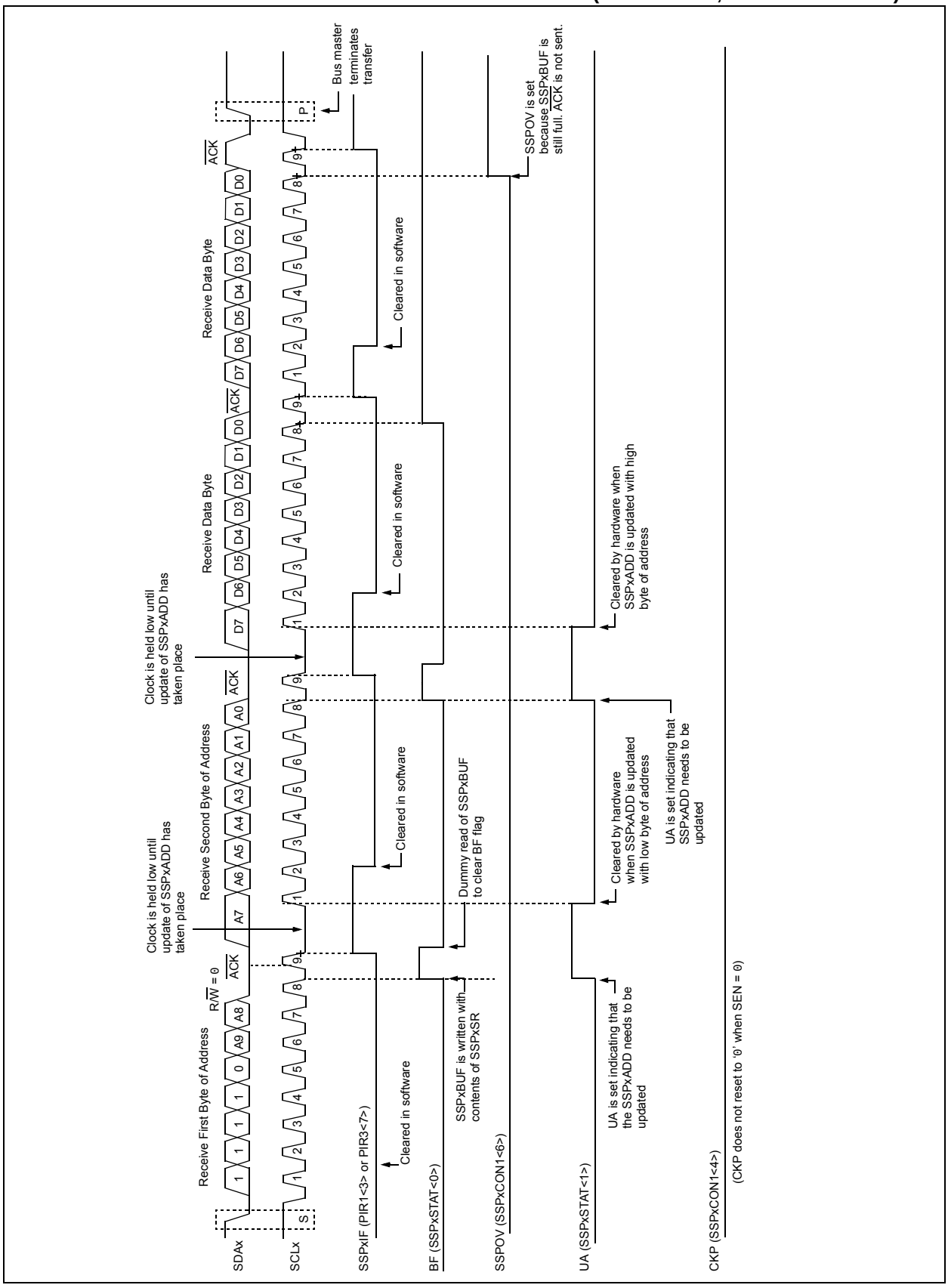

FIGURE 19-13: I²C™ SLAVE MODE TIMING (TRANSMISSION, 10-BIT ADDRESS)

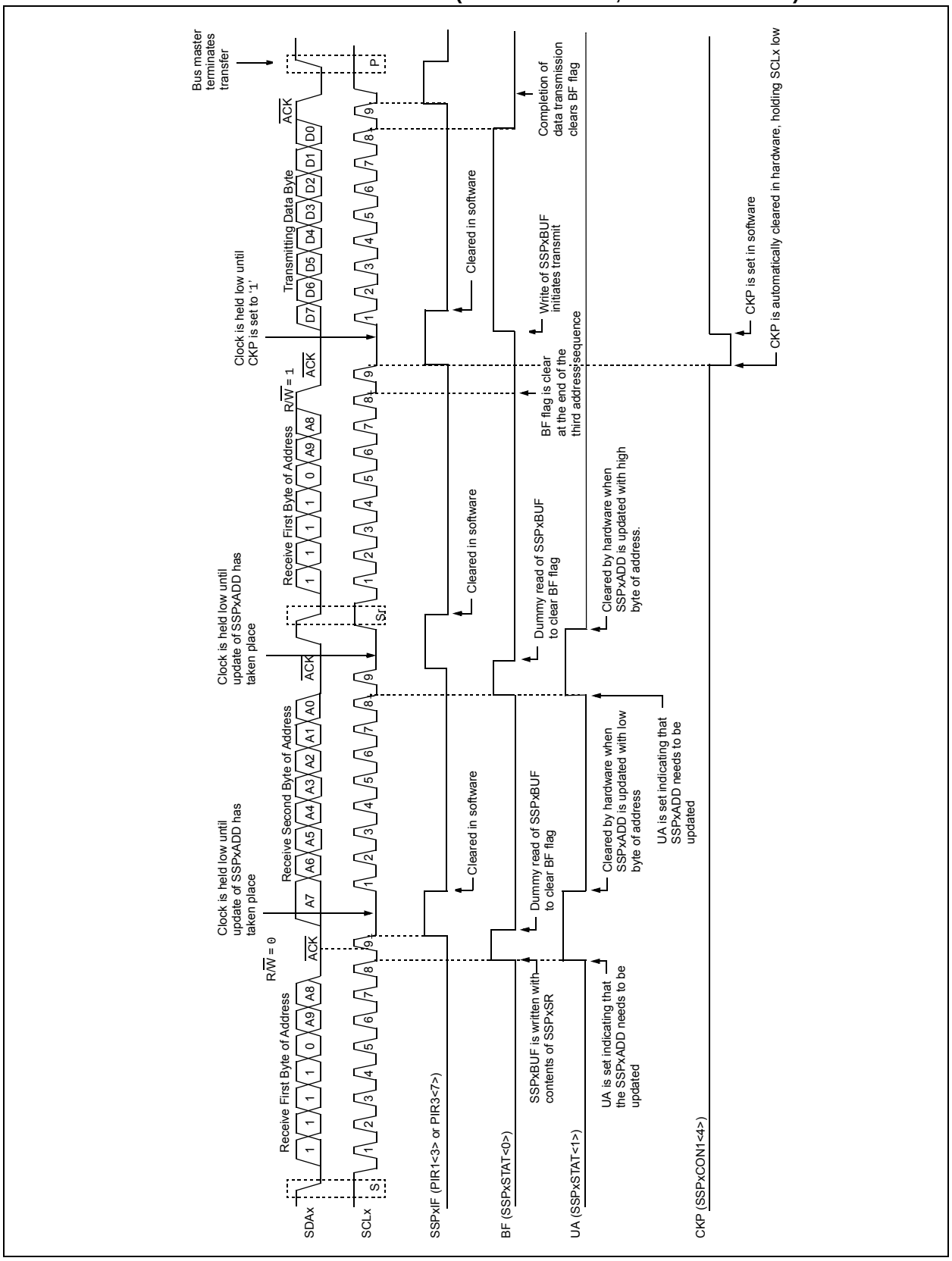

© 2011 Microchip Technology Inc.

19.5.4 CLOCK STRETCHING

Both 7-Bit and 10-Bit Slave modes implement automatic clock stretching during a transmit sequence.

The SEN bit (SSPxCON2<0>) allows clock stretching to be enabled during receives. Setting SEN will cause the SCLx pin to be held low at the end of each data receive sequence.

19.5.4.1 Clock Stretching for 7-Bit Slave Receive Mode (SEN = 1)

In 7-Bit Slave Receive mode, on the falling edge of the ninth clock at the end of the ACK sequence, if the BF bit is set, the CKP bit in the SSPxCON1 register is automatically cleared, forcing the SCLx output to be held low. The CKP bit being cleared to '0' will assert the SCLx line low. The CKP bit must be set in the user's ISR before reception is allowed to continue. By holding the SCLx line low, the user has time to service the ISR and read the contents of the SSPxBUF before the master device can initiate another receive sequence. This will prevent buffer overruns from occurring (see Figure 19-15).

Note 1: If the user reads the contents of the SSPxBUF before the falling edge of the ninth clock, thus clearing the BF bit, the CKP bit will not be cleared and clock stretching will not occur.

2: The CKP bit can be set in software regardless of the state of the BF bit. The user should be careful to clear the BF bit in the ISR before the next receive sequence in order to prevent an overflow condition.

19.5.4.2 Clock Stretching for 10-Bit Slave Receive Mode (SEN = 1)

In 10-Bit Slave Receive mode, during the address sequence, clock stretching automatically takes place but CKP is not cleared. During this time, if the UA bit is set after the ninth clock, clock stretching is initiated. The UA bit is set after receiving the upper byte of the 10-bit address and following the receive of the second byte of the 10-bit address, with the R/W bit cleared to '0'. The release of the clock line occurs upon updating SSPxADD. Clock stretching will occur on each data receive sequence as described in 7-bit mode.

Note: If the user polls the UA bit and clears it by updating the SSPxADD register before the falling edge of the ninth clock occurs, and if the user has not cleared the BF bit by reading the SSPxBUF register before that time, then the CKP bit will still NOT be asserted low. Clock stretching on the basis of the state of the BF bit only occurs during a data sequence, not an address sequence.

19.5.4.3 Clock Stretching for 7-Bit Slave Transmit Mode

The 7-Bit Slave Transmit mode implements clock stretching by clearing the CKP bit after the falling edge of the ninth clock if the BF bit is clear. This occurs regardless of the state of the SEN bit.

The user's Interrupt Service Routine (ISR) must set the CKP bit before transmission is allowed to continue. By holding the SCLx line low, the user has time to service the ISR and load the contents of the SSPxBUF before the master device can initiate another transmit sequence (see Figure 19-10).

Note 1: If the user loads the contents of SSPxBUF, setting the BF bit before the falling edge of the ninth clock, the CKP bit will not be cleared and clock stretching will not occur.

2: The CKP bit can be set in software regardless of the state of the BF bit.

19.5.4.4 Clock Stretching for 10-Bit Slave Transmit Mode

In 10-Bit Slave Transmit mode, clock stretching is controlled during the first two address sequences by the state of the UA bit, just as it is in 10-Bit Slave Receive mode. The first two addresses are followed by a third address sequence, which contains the high-order bits of the 10-bit address and the R/W bit set to '1'. After the third address sequence is performed, the UA bit is not set, the module is now configured in Transmit mode and clock stretching is controlled by the BF flag, as in 7-Bit Slave Transmit mode (see Figure 19-13).

19.5.4.5 Clock Synchronization and CKP bit

When the CKP bit is cleared, the SCLx output is forced to '0'. However, clearing the CKP bit will not assert the SCLx output low until the SCLx output is already sampled low. Therefore, the CKP bit will not assert the SCLx line until an external I^2C master device has already asserted the SCLx line. The SCLx output will remain low until the CKP bit is set and all other devices on the I^2C bus have deasserted SCLx. This ensures that a write to the CKP bit will not violate the minimum high time requirement for SCLx (see Figure 19-14).

FIGURE 19-14: CLOCK SYNCHRONIZATION TIMING

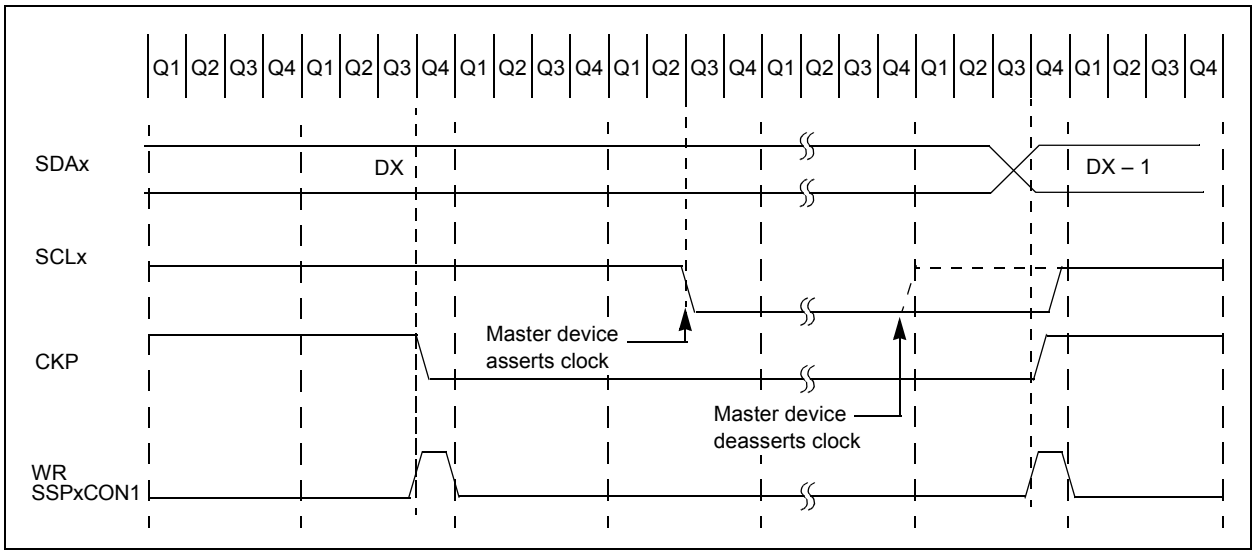

© 2011 Microchip Technology Inc.

FIGURE 19-15: I²C™ SLAVE MODE TIMING WITH SEN = 1 (RECEPTION, 7-BIT ADDRESS)

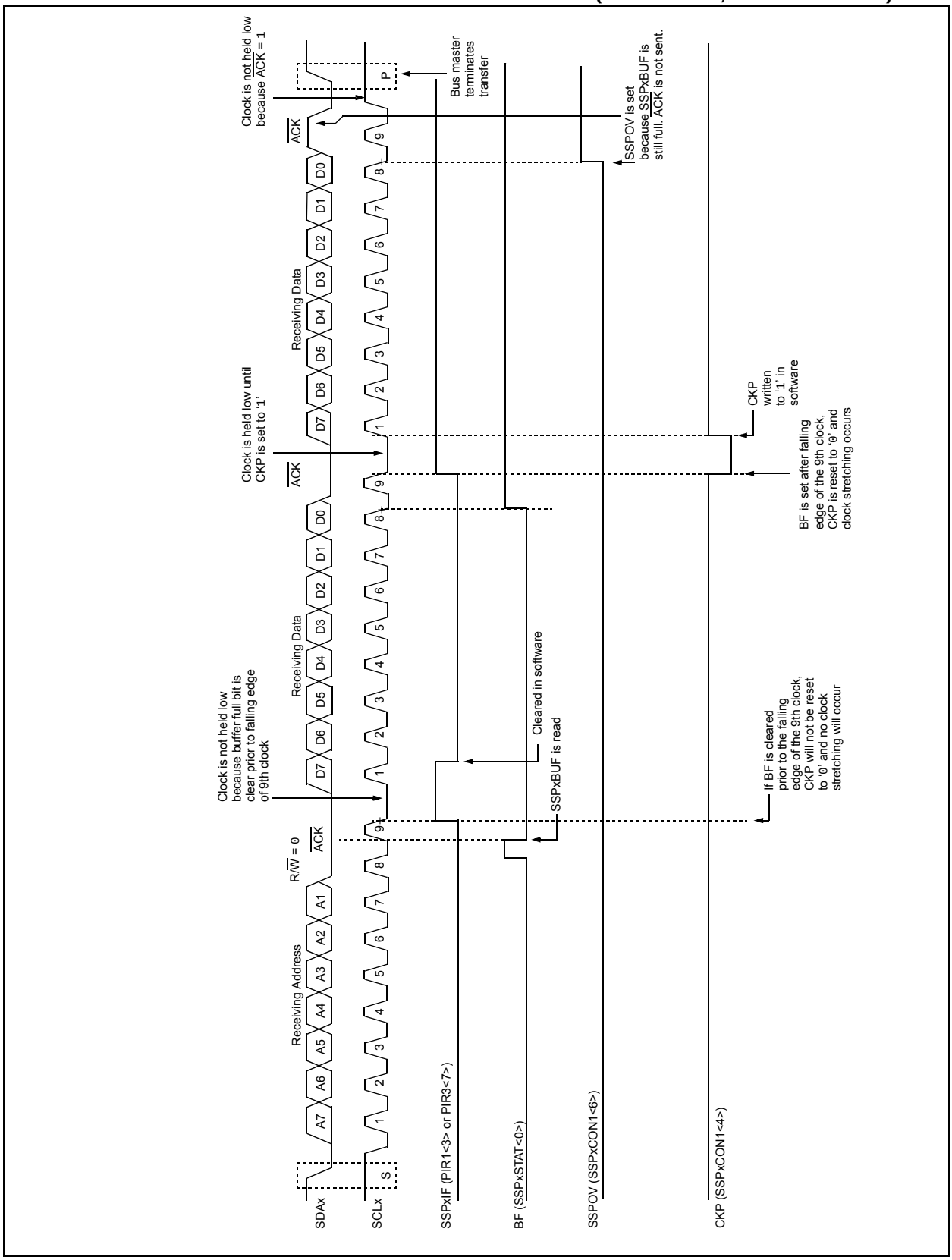

FIGURE 19-16: I²C™ SLAVE MODE TIMING WITH SEN = 1 (RECEPTION, 10-BIT ADDRESS)

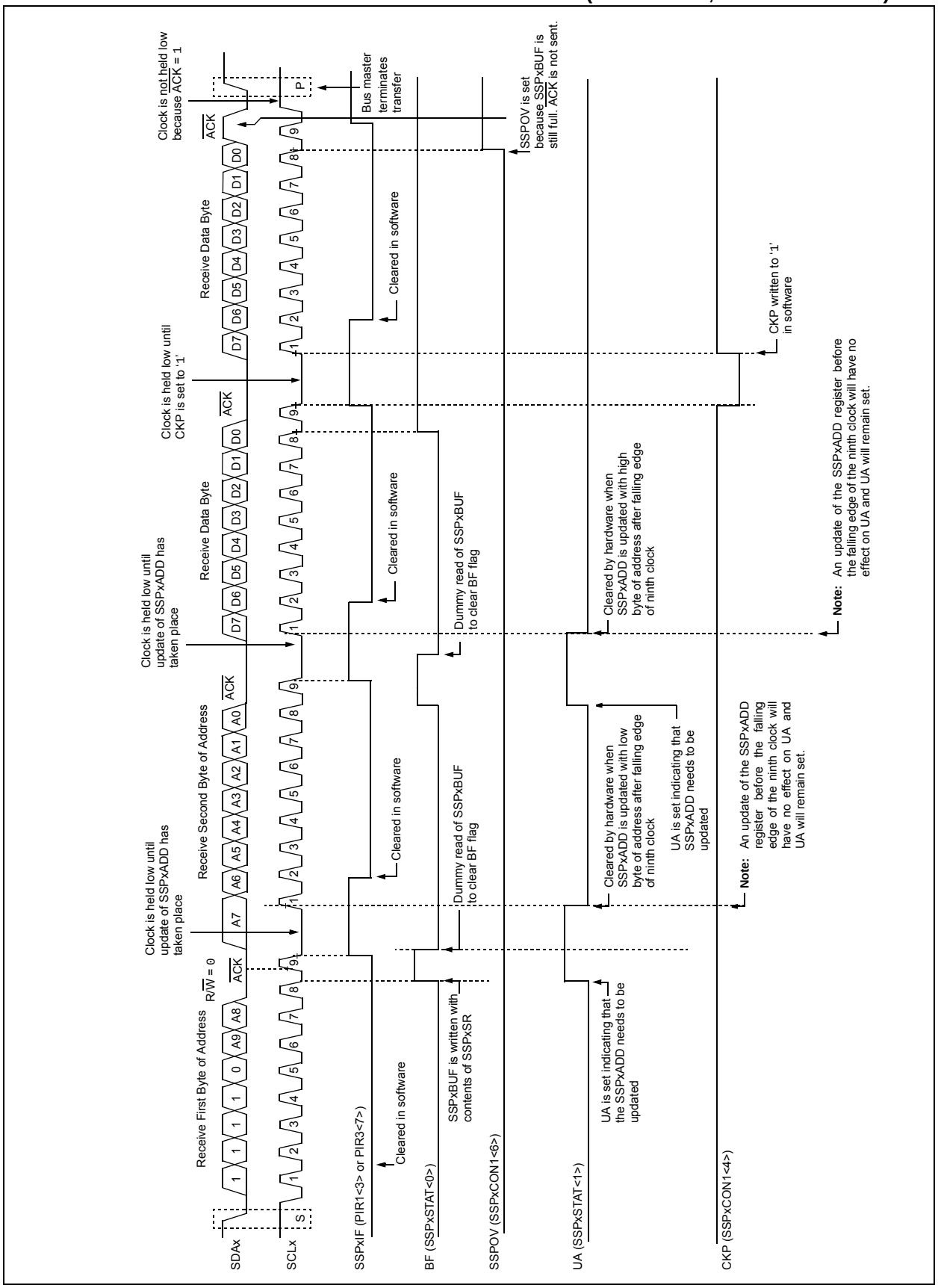

© 2011 Microchip Technology Inc.

19.5.5 GENERAL CALL ADDRESS SUPPORT

The addressing procedure for the I^2C bus is such that the first byte after the Start condition usually determines which device will be the slave addressed by the master. The exception is the general call address which can address all devices. When this address is used, all devices should, in theory, respond with an Acknowledge.

The general call address is one of eight addresses reserved for specific purposes by the I^2C protocol. It consists of all '0's with R/$\overline{W}$ = 0.

The general call address is recognized when the General Call Enable bit, GCEN, is enabled (SSPxCON2<7> is set). Following a Start bit detect, 8 bits are shifted into the SSPxSR and the address is compared against the SSPxADD. It is also compared to the general call address and fixed in hardware.

If the general call address matches, the SSPxSR is transferred to the SSPxBUF, the BF flag bit is set (eighth bit), and on the falling edge of the ninth bit ($\overline{ACK}$ bit), the SSPxIF interrupt flag bit is set.

When the interrupt is serviced, the source for the interrupt can be checked by reading the contents of the SSPxBUF. The value can be used to determine if the address was device-specific or a general call address.

In 10-bit mode, the SSPxADD is required to be updated for the second half of the address to match and the UA bit is set (SSPxSTAT<1>). If the general call address is sampled when the GCEN bit is set, while the slave is configured in 10-Bit Addressing mode, then the second half of the address is not necessary, the UA bit will not be set and the slave will begin receiving data after the Acknowledge (Figure 19-17).

FIGURE 19-17: SLAVE MODE GENERAL CALL ADDRESS SEQUENCE (7-BIT OR 10-BIT ADDRESSING MODE)

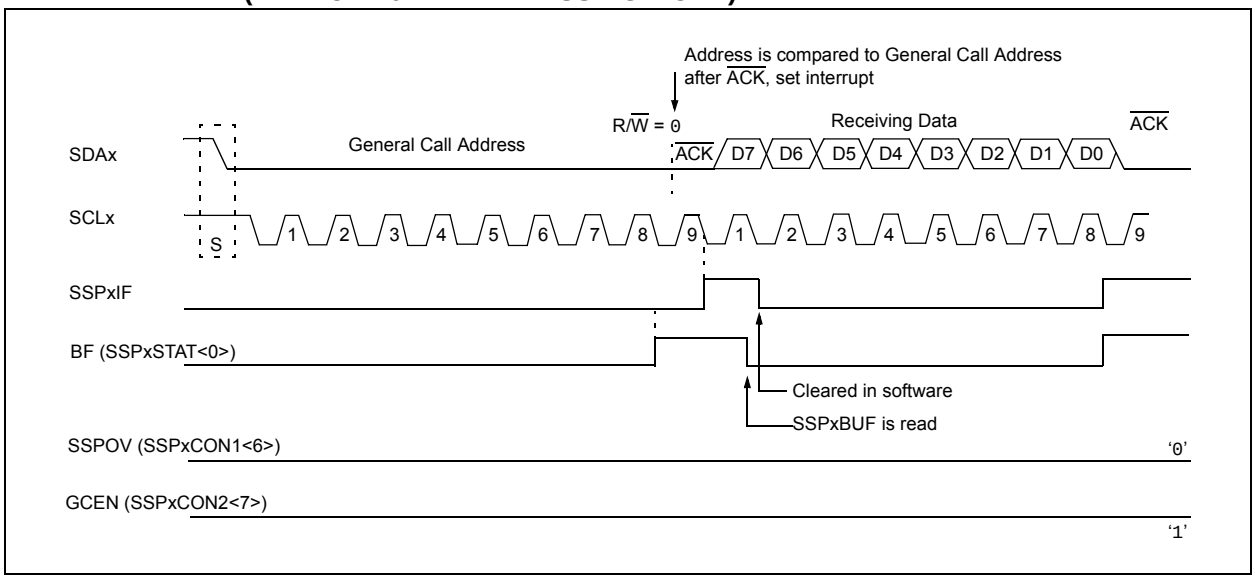

19.5.6 MASTER MODE

Master mode is enabled by setting and clearing the appropriate SSPM bits in SSPxCON1 and by setting the SSPEN bit. In Master mode, the SCLx and SDAx lines are manipulated by the MSSP hardware if the TRIS bits are set.

Master mode of operation is supported by interrupt generation on the detection of the Start and Stop conditions. The Start (S) and Stop (P) bits are cleared from a Reset or when the MSSP module is disabled. Control of the I^2C bus may be taken when the Stop bit is set, or the bus is Idle, with both the Start and Stop bits clear.

In Firmware Controlled Master mode, user code conducts all I^2C bus operations based on Start and Stop bit conditions.

Once Master mode is enabled, the user has six options.

1. Assert a Start condition on SDAx and SCLx.
2. Assert a Repeated Start condition on SDAx and SCLx.
3. Write to the SSPxBUF register initiating transmission of data/address.
4. Configure the I^2C port to receive data.
5. Generate an Acknowledge condition at the end of a received byte of data.
6. Generate a Stop condition on SDAx and SCLx.

Note: The MSSP module, when configured in I^2C Master mode, does not allow queueing of events. For instance, the user is not allowed to initiate a Start condition and immediately write the SSPxBUF register to initiate transmission before the Start condition is complete. In this case, the SSPxBUF will not be written to and the WCOL bit will be set, indicating that a write to the SSPxBUF did not occur.

The following events will cause the MSSP Interrupt Flag bit, SSPxIF, to be set (and MSSP interrupt, if enabled):

- Start condition
- Stop condition
- Data transfer byte transmitted/received
- Acknowledge transmitted
- Repeated Start

FIGURE 19-18: MSSPx BLOCK DIAGRAM (I^2C™ MASTER MODE)

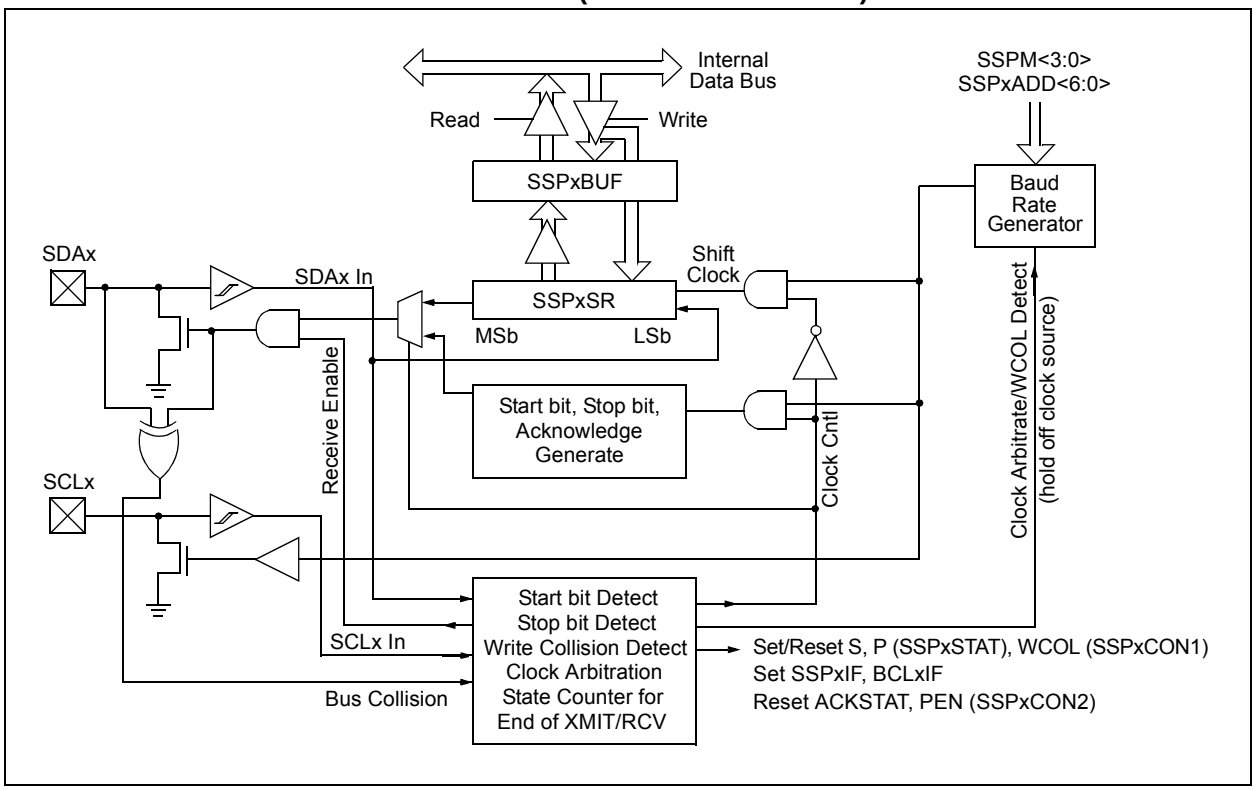

© 2011 Microchip Technology Inc.

19.5.6.1 I²C Master Mode Operation

The master device generates all of the serial clock pulses and the Start and Stop conditions. A transfer is ended with a Stop condition or with a Repeated Start condition. Since the Repeated Start condition is also the beginning of the next serial transfer, the I²C bus will not be released.

In Master Transmitter mode, serial data is output through SDAx while SCLx outputs the serial clock. The first byte transmitted contains the slave address of the receiving device (7 bits) and the Read/Write (R/$\overline{W}$) bit. In this case, the R/$\overline{W}$ bit will be logic '0'. Serial data is transmitted 8 bits at a time. After each byte is transmitted, an Acknowledge bit is received. S and P conditions are output to indicate the beginning and the end of a serial transfer.

In Master Receive mode, the first byte transmitted contains the slave address of the transmitting device (7 bits) and the R/$\overline{W}$ bit. In this case, the R/$\overline{W}$ bit will be logic '1'. Thus, the first byte transmitted is a 7-bit slave address, followed by a '1' to indicate the receive bit. Serial data is received via SDAx, while SCLx outputs the serial clock. Serial data is received 8 bits at a time. After each byte is received, an Acknowledge bit is transmitted. S and P conditions indicate the beginning and end of transmission.

The BRG, used for the SPI mode operation, is used to set the SCLx clock frequency for either 100 kHz, 400 kHz or 1 MHz I²C operation. See **Section 19.5.7 "Baud Rate"** for more details.

A typical transmit sequence would go as follows:

1. The user generates a Start condition by setting the Start Enable bit, SEN (SSPxCON2<0>).
2. SSPxIF is set. The MSSP module will wait for the required start time before any other operation takes place.
3. The user loads the SSPxBUF with the slave address to transmit.
4. Address is shifted out of the SDAx pin until all 8 bits are transmitted.
5. The MSSP module shifts in the ACK bit from the slave device and writes its value into the SSPxCON2 register (SSPxCON2<6>).
6. The MSSP module generates an interrupt at the end of the ninth clock cycle by setting the SSPxIF bit.
7. The user loads the SSPxBUF with 8 bits of data.
8. Data is shifted out the SDAx pin until all 8 bits are transmitted.
9. The MSSP module shifts in the ACK bit from the slave device and writes its value into the SSPxCON2 register (SSPxCON2<6>).
10. The MSSP module generates an interrupt at the end of the ninth clock cycle by setting the SSPxIF bit.
11. The user generates a Stop condition by setting the Stop Enable bit, PEN (SSPxCON2<2>).
12. Interrupt is generated once the Stop condition is complete.

19.5.7 BAUD RATE

In I²C Master mode, the BRG reload value is placed in the lower seven bits of the SSPxADD register (Figure 19-19). When a write occurs to SSPxBUF, the Baud Rate Generator will automatically begin counting. The BRG counts down to 0 and stops until another reload has taken place. The BRG count is decremented, twice per instruction cycle (T_{CY}), on the Q2 and Q4 clocks. In I²C Master mode, the BRG is reloaded automatically.

Once the given operation is complete (i.e., transmission of the last data bit is followed by $\overline{ACK}$), the internal clock will automatically stop counting and the SCLx pin will remain in its last state.

Table 19-3 demonstrates clock rates based on instruction cycles and the BRG value loaded into SSPxADD. The SSPxADD value of '0x00' is not supported; values $\geq$ 0x01 should be used instead.

19.5.7.1 Baud Rate and Module Interdependence

Because MSSP1 and MSSP2 are independent, they can operate simultaneously in I^2C Master mode at different baud rates. This is done by using different BRG reload values for each module.

Because this mode derives its basic clock source from the system clock, any changes to the clock will affect both modules in the same proportion. It may be possible to change one or both baud rates back to a previous value by changing the BRG reload value.

FIGURE 19-19: BAUD RATE GENERATOR BLOCK DIAGRAM

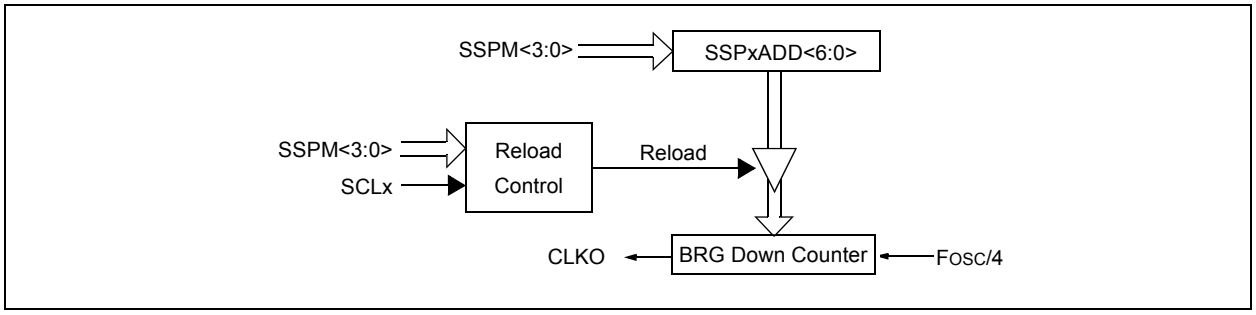

TABLE 19-3: I^2C™ CLOCK RATE w/BRG

FOSC	FCY	FCY * 2	BRG Value	FSCL (2 Rollovers of BRG)
48 MHz	12 MHz	24 MHz	77h	100 kHz
40 MHz	10 MHz	20 MHz	18h	400 kHz(1)
40 MHz	10 MHz	20 MHz	63h	100 kHz
16 MHz	4 MHz	8 MHz	03h	1 MHz(1)
16 MHz	4 MHz	8 MHz	09h	400 kHz(1)
16 MHz	4 MHz	8 MHz	0Ch	308 kHz
16 MHz	4 MHz	8 MHz	27h	100 kHz
4 MHz	1 MHz	2 MHz	02h	333 kHz(1)
4 MHz	1 MHz	2 MHz	09h	100 kHz

Note 1: The I^2C interface does not conform to the 400 kHz I^2C specification (which applies to rates greater than 100 kHz) in all details, but may be used with care where higher rates are required by the application.

© 2011 Microchip Technology Inc.

19.5.7.2 Clock Arbitration

Clock arbitration occurs when the master, during any receive, transmit or Repeated Start/Stop condition, deasserts the SCLx pin (SCLx allowed to float high). When the SCLx pin is allowed to float high, the BRG is suspended from counting until the SCLx pin is actually sampled high. When the SCLx pin is sampled high, the BRG is reloaded with the contents of SSPxADD<6:0> and begins counting. This ensures that the SCLx high time will always be at least one BRG rollover count in the event that the clock is held low by an external device (Figure 19-20).

FIGURE 19-20: BAUD RATE GENERATOR TIMING WITH CLOCK ARBITRATION

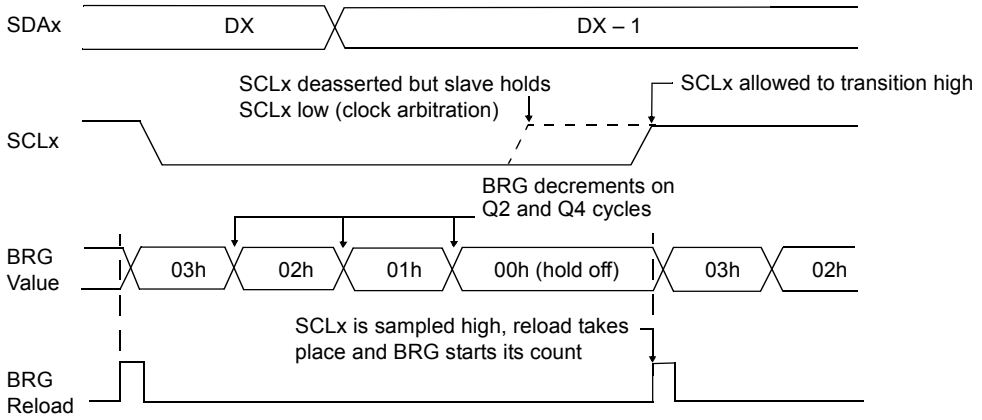

19.5.8 I²C MASTER MODE START CONDITION TIMING

To initiate a Start condition, the user sets the Start Enable bit, SEN (SSPxCON2<0>). If the SDAx and SCLx pins are sampled high, the BRG is reloaded with the contents of SSPxADD<6:0> and starts its count. If SCLx and SDAx are both sampled high, when the Baud Rate Generator times out (TBRG), the SDAx pin is driven low. The action of the SDAx being driven low while SCLx is high is the Start condition and causes the Start bit (SSPxSTAT<3>) to be set. Following this, the BRG is reloaded with the contents of SSPxADD<6:0> and resumes its count. When the BRG times out (TBRG), the SEN bit (SSPxCON2<0>) will be automatically cleared by hardware. The BRG is suspended, leaving the SDAx line held low and the Start condition is complete.

Note: If, at the beginning of the Start condition, the SDAx and SCLx pins are already sampled low, or if during the Start condition, the SCLx line is sampled low before the SDAx line is driven low, a bus collision occurs, the Bus Collision Interrupt Flag, BCLxIF, is set, the Start condition is aborted and the I²C module is reset into its Idle state.

19.5.8.1 WCOL Status Flag

If the user writes the SSPxBUF when a Start sequence is in progress, the WCOL bit is set and the contents of the buffer are unchanged (the write does not occur).

Note: Because queueing of events is not allowed, writing to the lower five bits of SSPxCON2 is disabled until the Start condition is complete.

FIGURE 19-21: FIRST START BIT TIMING

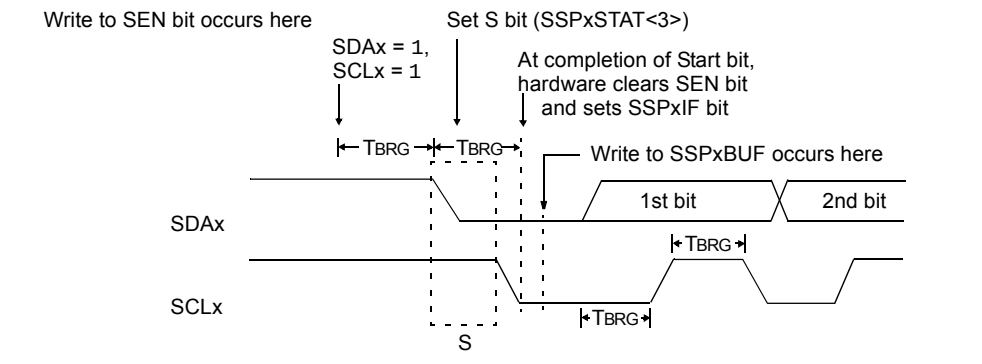

19.5.9 I²C MASTER MODE REPEATED START CONDITION TIMING

A Repeated Start condition occurs when the RSEN bit (SSPxCON2<1>) is programmed high and the I²C logic module is in the Idle state. When the RSEN bit is set, the SCLx pin is asserted low. When the SCLx pin is sampled low, the BRG is loaded with the contents of SSPxADD<5:0> and begins counting. The SDAx pin is released (brought high) for one BRG count (TBRG). When the BRG times out, and if SDAx is sampled high, the SCLx pin will be deasserted (brought high). When SCLx is sampled high, the BRG is reloaded with the contents of SSPxADD<6:0> and begins counting. SDAx and SCLx must be sampled high for one TBRG. This action is then followed by assertion of the SDAx pin (SDAx = 0) for one TBRG while SCLx is high. Following this, the RSEN bit (SSPxCON2<1>) will be automatically cleared and the BRG will not be reloaded, leaving the SDAx pin held low. As soon as a Start condition is detected on the SDAx and SCLx pins, the Start bit (SSPxSTAT<3>) will be set. The SSPxIF bit will not be set until the BRG has timed out.

Note 1: If RSEN is programmed while any other event is in progress, it will not take effect.

2: A bus collision during the Repeated Start condition occurs if:

- SDAx is sampled low when SCLx goes from low-to-high.
- SCLx goes low before SDAx is asserted low. This may indicate that another master is attempting to transmit a data '1'.

Immediately following the SSPxIF bit getting set, the user may write the SSPxBUF with the 7-bit address in 7-bit mode, or the default first address in 10-bit mode. After the first eight bits are transmitted and an ACK is received, the user may then transmit an additional 8 bits of address (10-bit mode) or 8 bits of data (7-bit mode).

19.5.9.1 WCOL Status Flag

If the user writes the SSPxBUF when a Repeated Start sequence is in progress, the WCOL is set and the contents of the buffer are unchanged (the write does not occur).

Note: Because queueing of events is not allowed, writing of the lower five bits of SSPxCON2 is disabled until the Repeated Start condition is complete.

FIGURE 19-22: REPEATED START CONDITION WAVEFORM

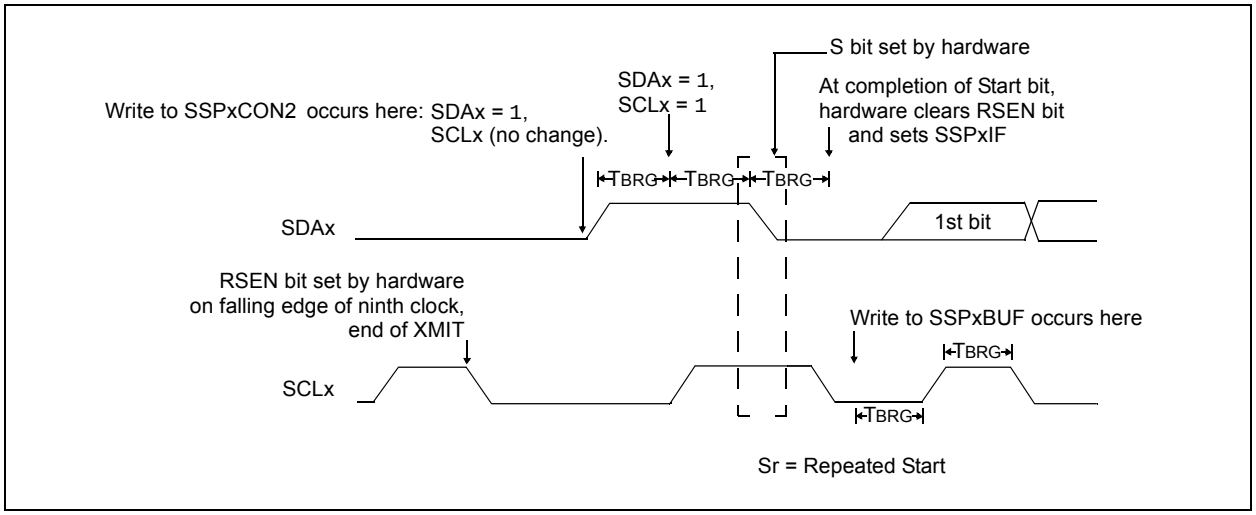

© 2011 Microchip Technology Inc.

19.5.10 I²C MASTER MODE TRANSMISSION

Transmission of a data byte, a 7-bit address or the other half of a 10-bit address, is accomplished by simply writing a value to the SSPxBUF register. This action will set the Buffer Full flag bit, BF, and allow the BRG to begin counting and start the next transmission. Each bit of address/data will be shifted out onto the SDAx pin after the falling edge of SCLx is asserted (see data hold time specification Parameter 106). SCLx is held low for one BRG rollover count (TBRG). Data should be valid before SCLx is released high (see data setup time specification Parameter 107). When the SCLx pin is released high, it is held that way for TBRG.

The data on the SDAx pin must remain stable for that duration and some hold time after the next falling edge of SCLx. After the eighth bit is shifted out (the falling edge of the eighth clock), the BF flag is cleared and the master releases SDAx. This allows the slave device being addressed to respond with an $\overline{ACK}$ bit during the ninth bit time if an address match occurred, or if data was received properly. The status of $\overline{ACK}$ is written into the ACKDT bit on the falling edge of the ninth clock.

If the master receives an Acknowledge, the Acknowledge Status bit, ACKSTAT, is cleared; if not, the bit is set. After the ninth clock, the SSPxIF bit is set and the master clock (BRG) is suspended until the next data byte is loaded into the SSPxBUF, leaving SCLx low and SDAx unchanged (Figure 19-23).

After the write to the SSPxBUF, each bit of the address will be shifted out on the falling edge of SCLx until all seven address bits and the R/$\overline{W}$ bit are completed. On the falling edge of the eighth clock, the master will deassert the SDAx pin, allowing the slave to respond with an Acknowledge. On the falling edge of the ninth clock, the master will sample the SDAx pin to see if the address was recognized by a slave. The status of the $\overline{ACK}$ bit is loaded into the ACKSTAT status bit (SSPxCON2<6>). Following the falling edge of the ninth clock transmission of the address, the SSPxIF flag is set, the BF flag is cleared and the BRG is turned off until another write to the SSPxBUF takes place, holding SCLx low and allowing SDAx to float.

19.5.10.1 BF Status Flag

In Transmit mode, the BF bit (SSPxSTAT<0>) is set when the CPU writes to SSPxBUF and is cleared when all eight bits are shifted out.

19.5.10.2 WCOL Status Flag

If the user writes the SSPxBUF when a transmit is already in progress (i.e., SSPxSR is still shifting out a data byte), the WCOL bit is set and the contents of the buffer are unchanged (the write does not occur) after 2 TCY after the SSPxBUF write. If SSPxBUF is rewritten within 2 TCY, the WCOL bit is set and SSPxBUF is updated. This may result in a corrupted transfer.

The user should verify that the WCOL bit is clear after each write to SSPxBUF to ensure the transfer is correct. In all cases, WCOL must be cleared in software.

19.5.10.3 ACKSTAT Status Flag

In Transmit mode, the ACKSTAT bit (SSPxCON2<6>) is cleared when the slave has sent an Acknowledge ($\overline{ACK}$ = 0) and is set when the slave does not Acknowledge ($\overline{ACK}$ = 1). A slave sends an Acknowledge when it has recognized its address (including a general call), or when the slave has properly received its data.

19.5.11 I²C MASTER MODE RECEPTION

Master mode reception is enabled by programming the Receive Enable bit, RCEN (SSPxCON2<3>).

Note:	The MSSP module must be in an inactive state before the RCEN bit is set or the RCEN bit will be disregarded.

The BRG begins counting and on each rollover, the state of the SCLx pin changes (high-to-low/low-to-high) and data is shifted into the SSPxSR. After the falling edge of the eighth clock, the receive enable flag is automatically cleared, the contents of the SSPxSR are loaded into the SSPxBUF, the BF flag bit is set, the SSPxIF flag bit is set and the BRG is suspended from counting, holding SCLx low. The MSSP is now in Idle state awaiting the next command. When the buffer is read by the CPU, the BF flag bit is automatically cleared. The user can then send an Acknowledge bit at the end of reception by setting the Acknowledge Sequence Enable bit, ACKEN (SSPxCON2<4>).

19.5.11.1 BF Status Flag

In receive operation, the BF bit is set when an address or data byte is loaded into SSPxBUF from SSPxSR. It is cleared when the SSPxBUF register is read.

19.5.11.2 SSPOV Status Flag

In receive operation, the SSPOV bit is set when 8 bits are received into the SSPxSR and the BF flag bit is already set from a previous reception.

19.5.11.3 WCOL Status Flag

If users write the SSPxBUF when a receive is already in progress (i.e., SSPxSR is still shifting in a data byte), the WCOL bit is set and the contents of the buffer are unchanged (the write does not occur).

FIGURE 19-23: I²C™ MASTER MODE WAVEFORM (TRANSMISSION, 7-BIT OR 10-BIT ADDRESS)

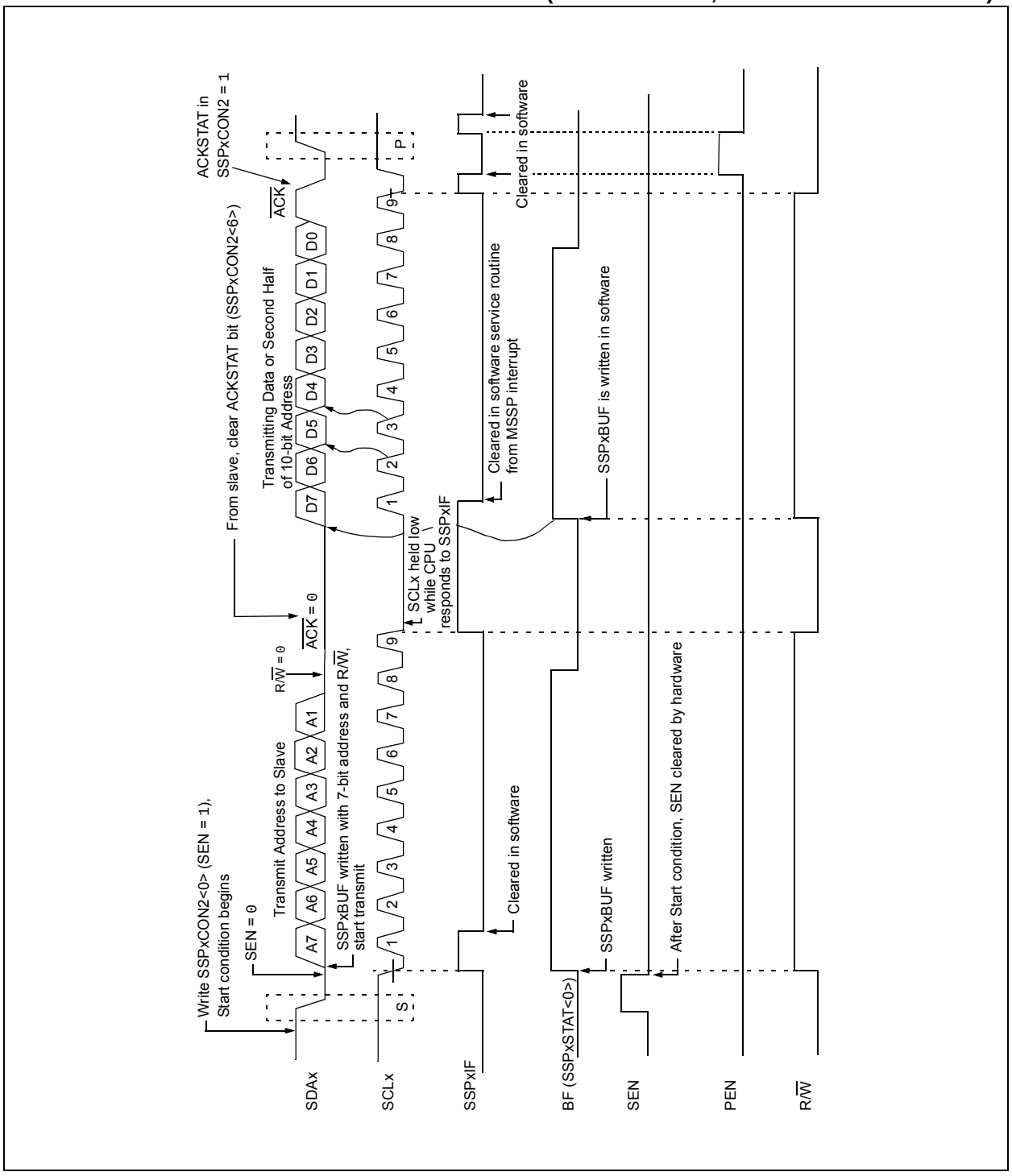

© 2011 Microchip Technology Inc.

FIGURE 19-24: I²C™ MASTER MODE WAVEFORM (RECEPTION, 7-BIT ADDRESS)

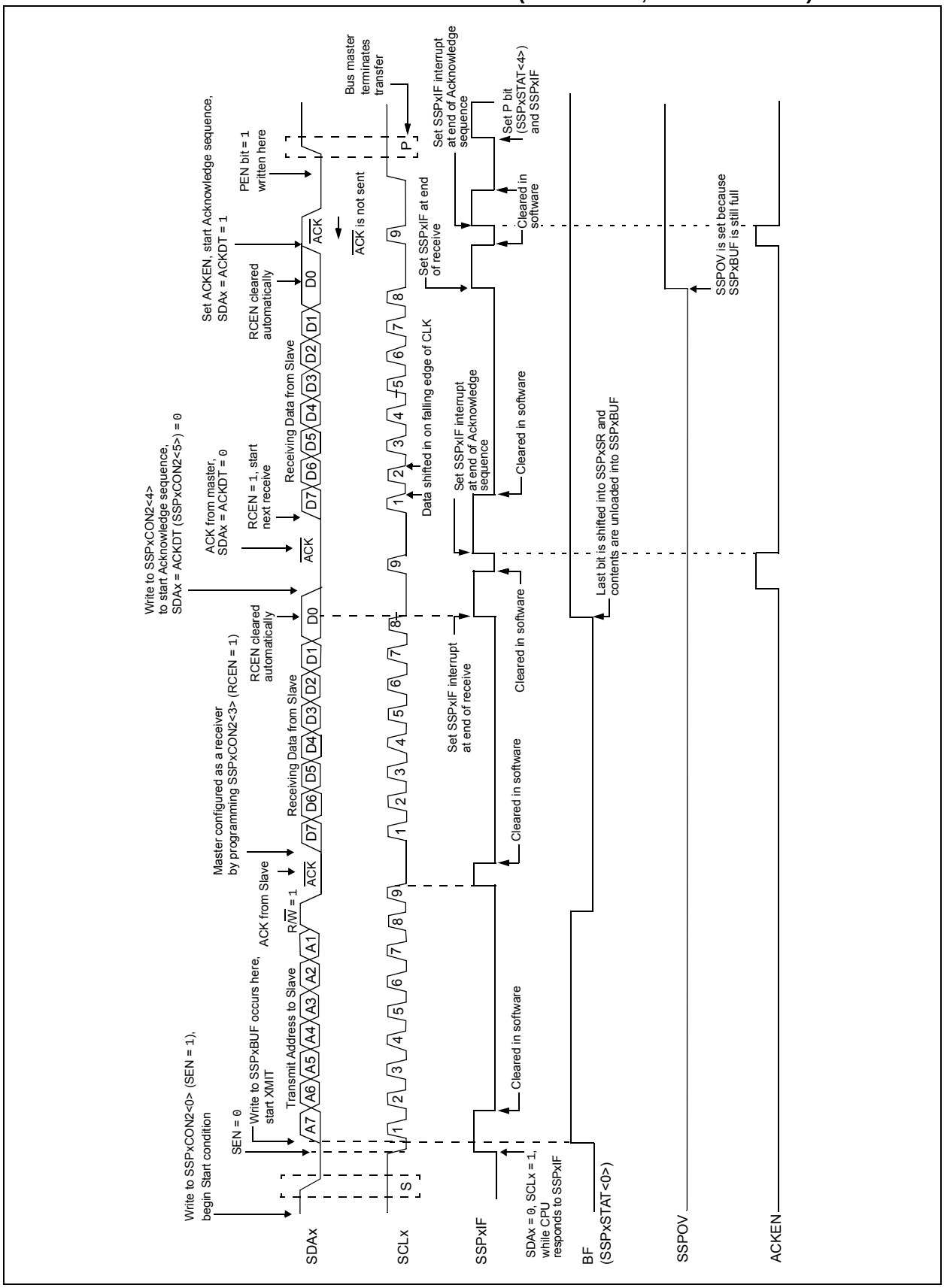

19.5.12 ACKNOWLEDGE SEQUENCE TIMING

An Acknowledge sequence is enabled by setting the Acknowledge Sequence Enable bit, ACKEN (SSPxCON2<4>). When this bit is set, the SCLx pin is pulled low and the contents of the Acknowledge data bit are presented on the SDAx pin. If the user wishes to generate an Acknowledge, then the ACKDT bit should be cleared. If not, the user should set the ACKDT bit before starting an Acknowledge sequence. The BRG then counts for one rollover period (TBRG) and the SCLx pin is deasserted (pulled high). When the SCLx pin is sampled high (clock arbitration), the BRG counts for TBRG; the SCLx pin is then pulled low. Following this, the ACKEN bit is automatically cleared, the BRG is turned off and the MSSP module then goes into an inactive state (Figure 19-25).

19.5.12.1 WCOL Status Flag

If the user writes the SSPxBUF when an Acknowledge sequence is in progress, then WCOL is set and the contents of the buffer are unchanged (the write does not occur).

19.5.13 STOP CONDITION TIMING

A Stop bit is asserted on the SDAx pin at the end of a receive/transmit by setting the Stop Sequence Enable bit, PEN (SSPxCON2<2>). At the end of a receive/transmit, the SCLx line is held low after the falling edge of the ninth clock. When the PEN bit is set, the master will assert the SDAx line low. When the SDAx line is sampled low, the BRG is reloaded and counts down to 0. When the BRG times out, the SCLx pin will be brought high and one Baud Rate Generator rollover count (TBRG) later, the SDAx pin will be deasserted. When the SDAx pin is sampled high while SCLx is high, the Stop bit (SSPxSTAT<4>) is set. A TBRG later, the PEN bit is cleared and the SSPxIF bit is set (Figure 19-26).

19.5.13.1 WCOL Status Flag

If the user writes the SSPxBUF when a Stop sequence is in progress, then the WCOL bit is set and the contents of the buffer are unchanged (the write does not occur).

FIGURE 19-25: ACKNOWLEDGE SEQUENCE WAVEFORM

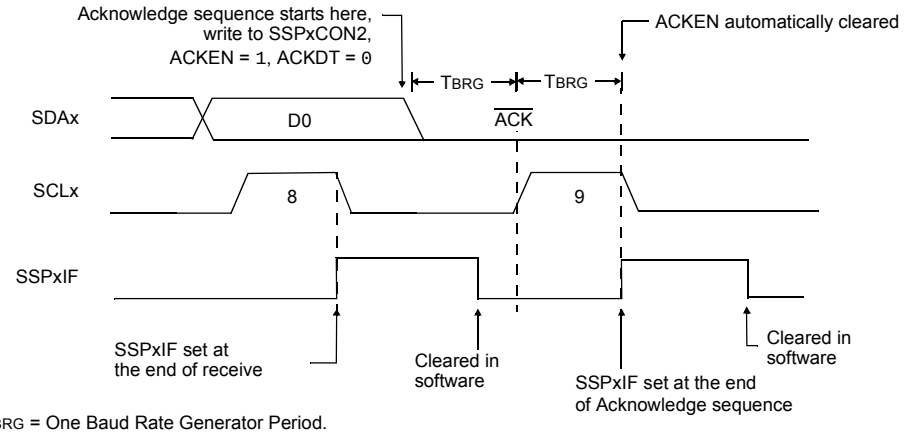

Note: TBRG = One Baud Rate Generator Period.

FIGURE 19-26: STOP CONDITION RECEIVE OR TRANSMIT MODE

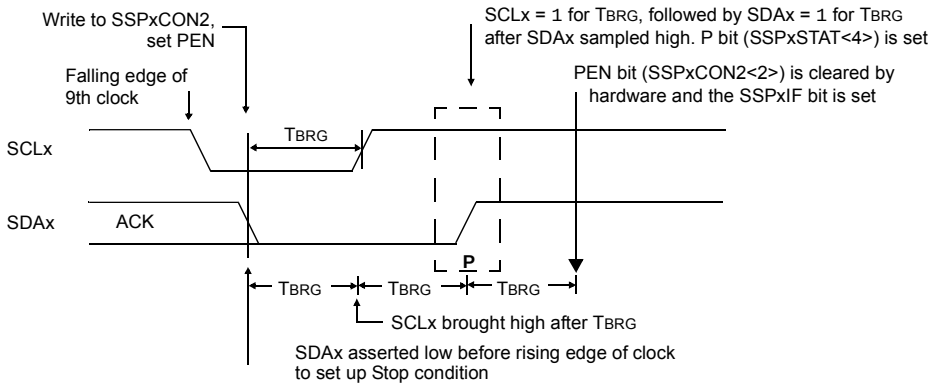

Note: TBRG = One Baud Rate Generator Period.

© 2011 Microchip Technology Inc.

19.5.14 SLEEP OPERATION

While in Sleep mode, the I^2C module can receive addresses or data and when an address match or complete byte transfer occurs, wake the processor from Sleep (if the MSSP interrupt is enabled).

19.5.15 EFFECTS OF A RESET

A Reset disables the MSSP module and terminates the current transfer.

19.5.16 MULTI-MASTER MODE

In Multi-Master mode, the interrupt generation on the detection of the Start and Stop conditions allows the determination of when the bus is free. The Start and Stop bits are cleared from a Reset or when the MSSP module is disabled. Control of the I^2C bus may be taken when the P bit (SSPxSTAT<4>) is set, or the bus is Idle, with both the Start and Stop bits clear. When the bus is busy, enabling the MSSP interrupt will generate the interrupt when the Stop condition occurs.

In multi-master operation, the SDAx line must be monitored for arbitration to see if the signal level is the expected output level. This check is performed in hardware with the result placed in the BCLxIF bit.

The states where arbitration can be lost are:

- Address Transfer
- Data Transfer
- A Start Condition
- A Repeated Start Condition
- An Acknowledge Condition

19.5.17 MULTI -MASTER COMMUNICATION, BUS COLLISION AND BUS ARBITRATION

Multi-Master mode support is achieved by bus arbitration. When the master outputs address/data bits onto the SDAx pin, arbitration takes place when the master outputs a '1' on SDAx, by letting SDAx float high and another master asserts a '0'. When the SCLx pin floats high, data should be stable. If the expected data on SDAx is a '1' and the data sampled on the SDAx pin = 0, then a bus collision has taken place. The master will set the Bus Collision Interrupt Flag, BCLxIF, and reset the I^2C port to its Idle state (Figure 19-27).

If a transmit was in progress when the bus collision occurred, the transmission is halted, the BF flag is cleared, the SDAx and SCLx lines are deasserted and the SSPxBUF can be written to. When the user services the bus collision Interrupt Service Routine and if the I^2C bus is free, the user can resume communication by asserting a Start condition.

If a Start, Repeated Start, Stop or Acknowledge condition was in progress when the bus collision occurred, the condition is aborted, the SDAx and SCLx lines are deasserted and the respective control bits in the SSPxCON2 register are cleared. When the user services the bus collision Interrupt Service Routine (ISR), and if the I^2C bus is free, the user can resume communication by asserting a Start condition.

The master will continue to monitor the SDAx and SCLx pins. If a Stop condition occurs, the SSPxIF bit will be set.

A write to the SSPxBUF will start the transmission of data at the first data bit regardless of where the transmitter left off when the bus collision occurred.

In Multi-Master mode, the interrupt generation on the detection of Start and Stop conditions allows the determination of when the bus is free. Control of the I^2C bus can be taken when the Stop bit is set in the SSPxSTAT register, or the bus is Idle and the Start and Stop bits are cleared.

FIGURE 19-27: BUS COLLISION TIMING FOR TRANSMIT AND ACKNOWLEDGE

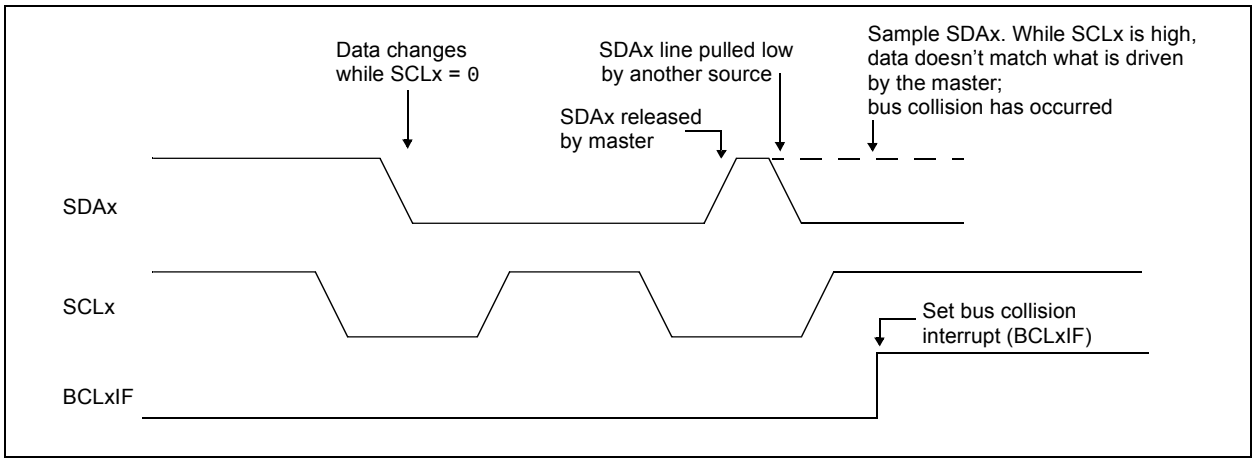

19.5.17.1 Bus Collision During a Start Condition

During a Start condition, a bus collision occurs if:

a) SDAx or SCLx is sampled low at the beginning of the Start condition (Figure 19-28).

b) SCLx is sampled low before SDAx is asserted low (Figure 19-29).

During a Start condition, both the SDAx and the SCLx pins are monitored.

If the SDAx pin is already low, or the SCLx pin is already low, then all of the following occur:

- The Start condition is aborted
- The BCLxIF flag is set
- The MSSP module is reset to its inactive state (Figure 19-28)

The Start condition begins with the SDAx and SCLx pins deasserted. When the SDAx pin is sampled high, the BRG is loaded from SSPxADD<6:0> and counts down to 0. If the SCLx pin is sampled low while SDAx is high, a bus collision occurs because it is assumed that another master is attempting to drive a data '1' during the Start condition.

If the SDAx pin is sampled low during this count, the BRG is reset and the SDAx line is asserted early (Figure 19-30). If, however, a '1' is sampled on the SDAx pin, the SDAx pin is asserted low at the end of the BRG count. The BRG is then reloaded and counts down to 0. If the SCLx pin is sampled as '0' during this time, a bus collision does not occur. At the end of the BRG count, the SCLx pin is asserted low.

Note: The reason that bus collision is not a factor during a Start condition is that no two bus masters can assert a Start condition at the exact same time. Therefore, one master will always assert SDAx before the other. This condition does not cause a bus collision because the two masters must be allowed to arbitrate the first address following the Start condition. If the address is the same, arbitration must be allowed to continue into the data portion, Repeated Start or Stop conditions.

FIGURE 19-28: BUS COLLISION DURING START CONDITION (SDAx ONLY)

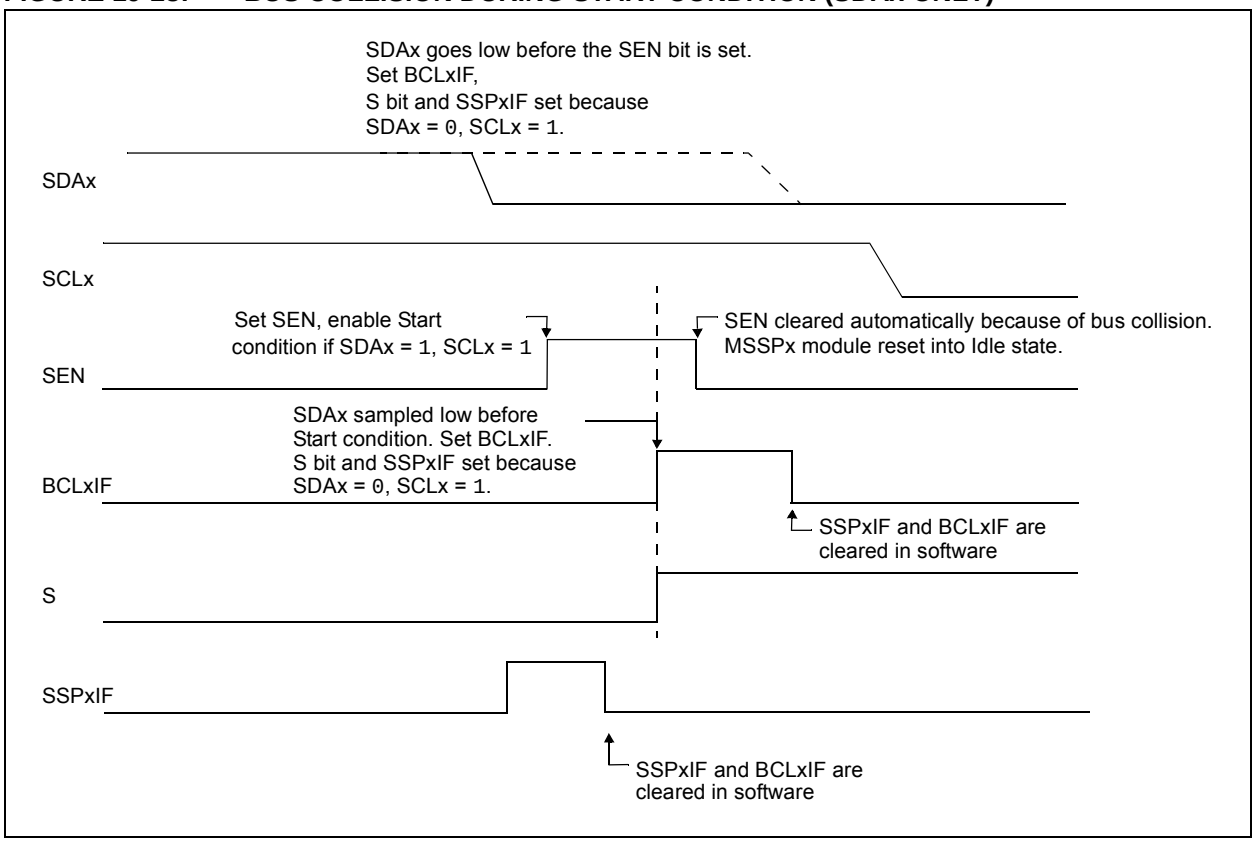

© 2011 Microchip Technology Inc.

FIGURE 19-29: BUS COLLISION DURING START CONDITION (SCLx = 0)

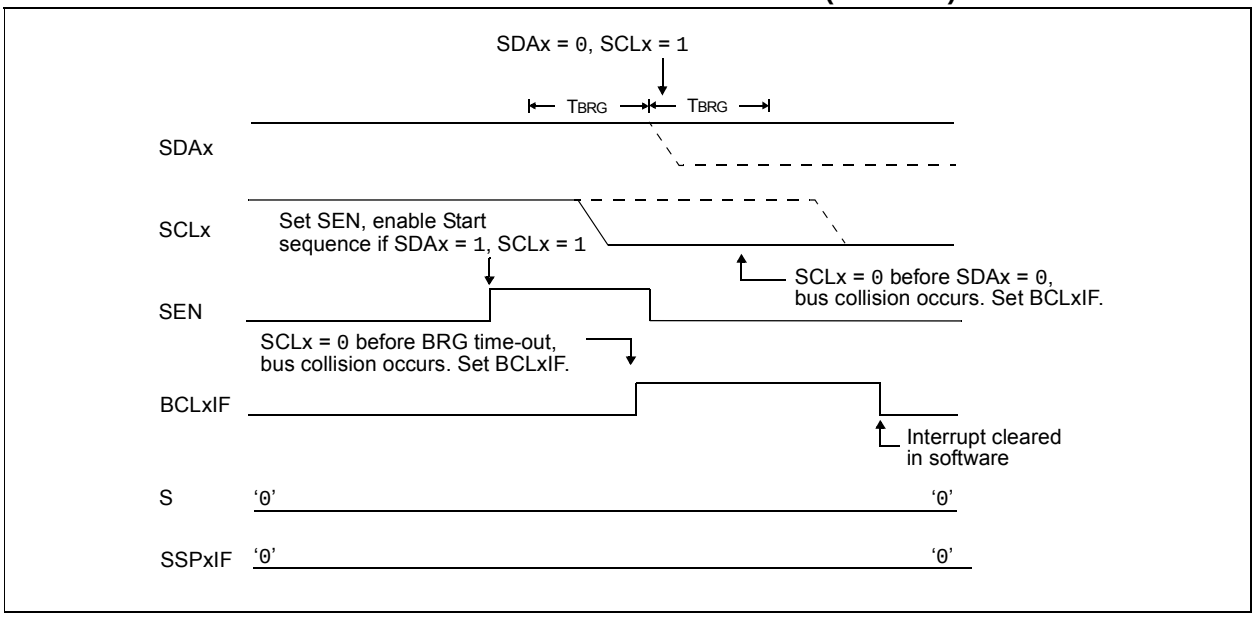

FIGURE 19-30: BRG RESET DUE TO SDAx ARBITRATION DURING START CONDITION

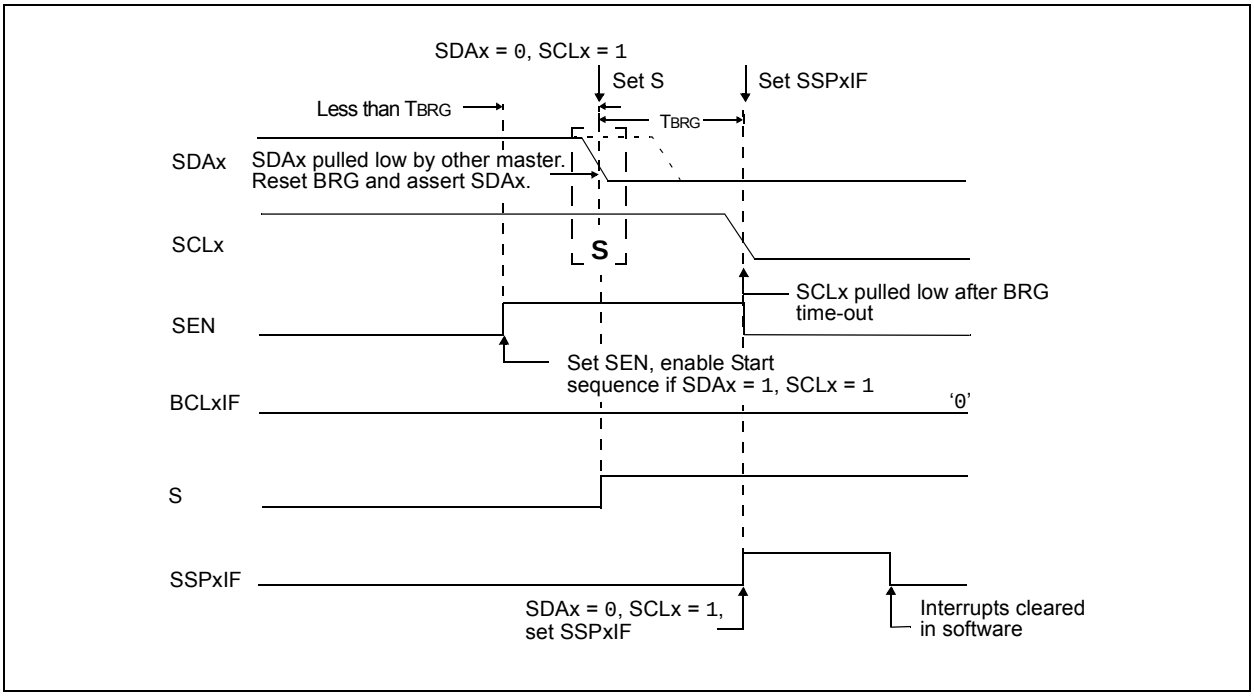

19.5.17.2 Bus Collision During a Repeated Start Condition

During a Repeated Start condition, a bus collision occurs if:

a) A low level is sampled on SDAx when SCLx goes from a low level to a high level.

b) SCLx goes low before SDAx is asserted low, indicating that another master is attempting to transmit a data '1'.

When the user deasserts SDAx and the pin is allowed to float high, the BRG is loaded with SSPxADD<6:0> and counts down to 0. The SCLx pin is then deasserted and when sampled high, the SDAx pin is sampled.

If SDAx is low, a bus collision has occurred (i.e., another master is attempting to transmit a data '0'; see Figure 19-31). If SDAx is sampled high, the BRG is reloaded and begins counting. If SDAx goes from high-to-low before the BRG times out, no bus collision occurs because no two masters can assert SDAx at exactly the same time.

If SCLx goes from high-to-low before the BRG times out and SDAx has not already been asserted, a bus collision occurs. In this case, another master is attempting to transmit a data '1' during the Repeated Start condition (see Figure 19-32).

If, at the end of the BRG time-out, both SCLx and SDAx are still high, the SDAx pin is driven low and the BRG is reloaded and begins counting. At the end of the count, regardless of the status of the SCLx pin, the SCLx pin is driven low and the Repeated Start condition is complete.

FIGURE 19-31: BUS COLLISION DURING A REPEATED START CONDITION (CASE 1)

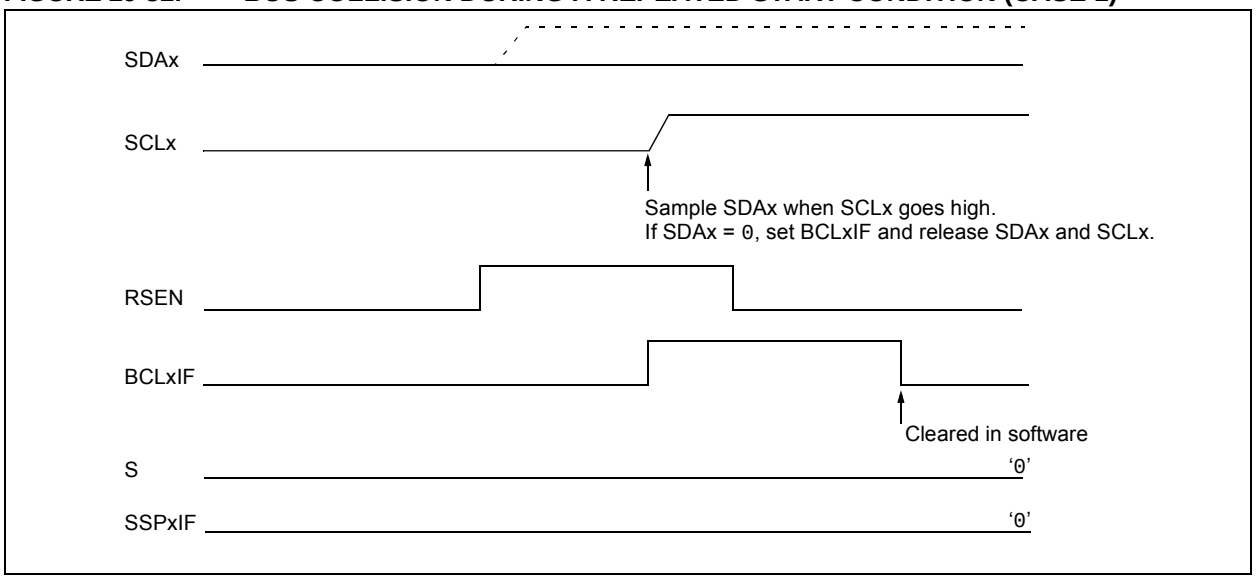

FIGURE 19-32: BUS COLLISION DURING REPEATED START CONDITION (CASE 2)

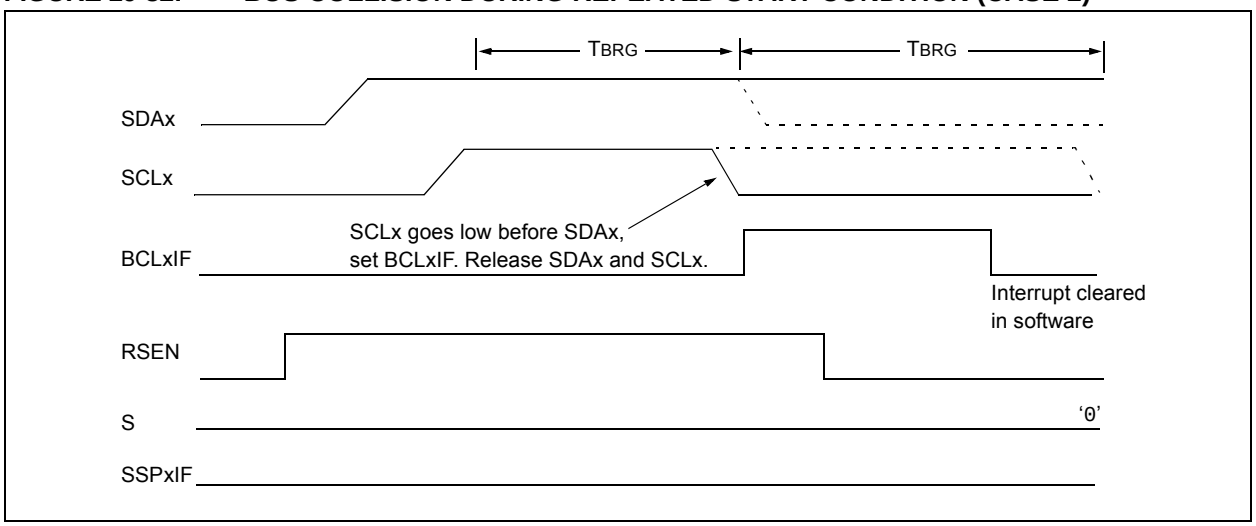

© 2011 Microchip Technology Inc.

19.5.17.3 Bus Collision During a Stop Condition

Bus collision occurs during a Stop condition if:

a) After the SDAx pin has been deasserted and allowed to float high, SDAx is sampled low after the BRG has timed out.

b) After the SCLx pin is deasserted, SCLx is sampled low before SDAx goes high.

The Stop condition begins with SDAx asserted low. When SDAx is sampled low, the SCLx pin is allowed to float. When the pin is sampled high (clock arbitration), the BRG is loaded with SSPxADD<6:0> and counts down to 0. After the BRG times out, SDAx is sampled. If SDAx is sampled low, a bus collision has occurred. This is due to another master attempting to drive a data '0' (Figure 19-33). If the SCLx pin is sampled low before SDAx is allowed to float high, a bus collision occurs. This is another case of another master attempting to drive a data '0' (Figure 19-34).

FIGURE 19-33: BUS COLLISION DURING A STOP CONDITION (CASE 1)

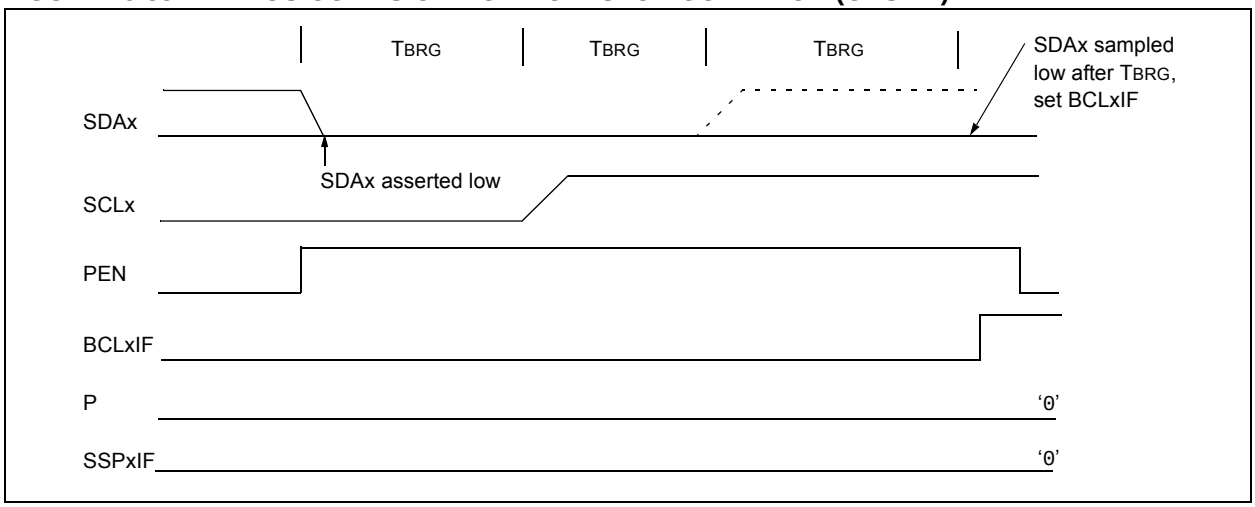

FIGURE 19-34: BUS COLLISION DURING A STOP CONDITION (CASE 2)

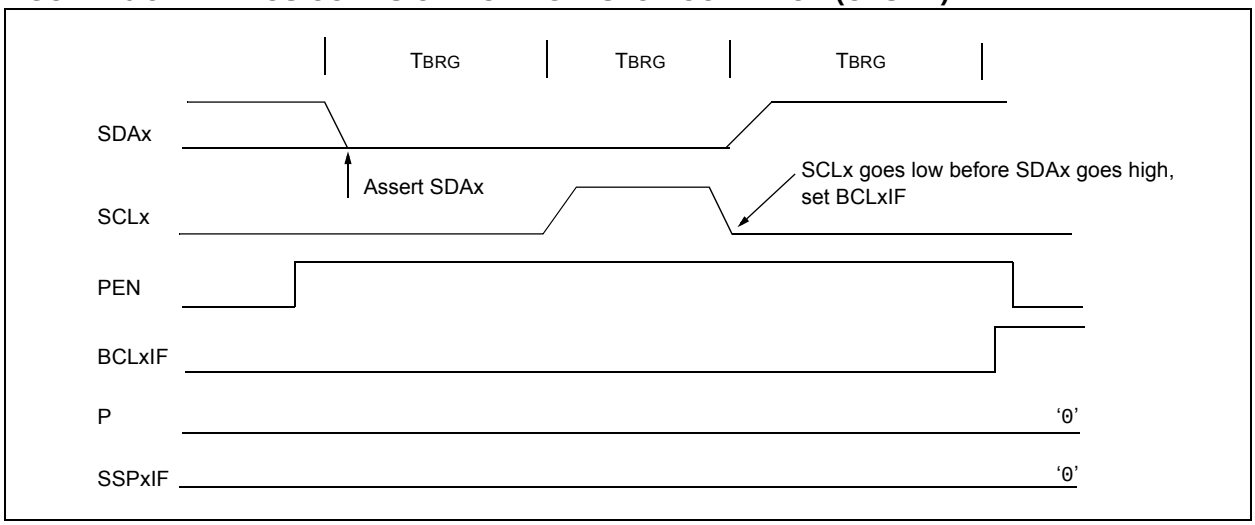

TABLE 19-4: REGISTERS ASSOCIATED WITH I²C™ OPERATION

Name	Bit 7	Bit 6	Bit 5	Bit 4	Bit 3	Bit 2	Bit 1	Bit 0	Reset Values on Page:
INTCON	GIE/GIEH	PEIE/GIEL	TMR0IE	INT0IE	RBIE	TMR0IF	INT0IF	RBIF	69
PIR1	PMPIF(3)	ADIF	RC1IF	TX1IF	SSP1IF	CCP1IF	TMR2IF	TMR1IF	72
PIE1	PMPIE(3)	ADIE	RC1IE	TX1IE	SSP1IE	CCP1IE	TMR2IE	TMR1IE	72
IPR1	PMPIP(3)	ADIP	RC1IP	TX1IP	SSP1IP	CCP1IP	TMR2IP	TMR1IP	72
PIR2	OSCFIF	CM2IF	CM1IF	USBIF	BCL1IF	HLVDIF	TMR3IF	CCP2IF	72
PIE2	OSCFIE	CM2IE	CM1IE	USBIE	BCL1IE	HLVDIE	TMR3IE	CCP2IE	72
IPR2	OSCFIP	CM2IP	CM1IP	USBIP	BCL1IP	HLVDIP	TMR3IP	CCP2IP	72
PIR3	SSP2IF	BCL2IF	RC2IF	TX2IF	TMR4IF	CTMUIF	TMR3GIF	RTCCIF	72
PIE3	SSP2IE	BCL2IE	RC2IE	TX2IE	TMR4IE	CTMUIE	TMR3GIE	RTCCIE	72
IPR3	SSP2IP	BCL2IP	RC2IP	TX2IP	TMR4IP	CTMUIP	TMR3GIP	RTCCIP	72
TRISD	TRISD7	TRISD6	TRISD5	TRISD4	TRISD3	TRISD2	TRISD1	TRISD0	72
TRISB	TRISB7	TRISB6	TRISB5	TRISB4	TRISB3	TRISB2	TRISB1	TRISB0	72
SSP1BUF	MSSP1 Receive Buffer/Transmit Register								72
SSPxADD	MSSP1 Address Register (I²C™ Slave mode), MSSP1 Baud Rate Reload Register (I²C Master mode)								70, 73
SSPxMSK(1)	MSK7	MSK6	MSK5	MSK4	MSK3	MSK2	MSK1	MSK0	70, 73
SSPxCON1	WCOL	SSPOV	SSPEN	CKP	SSPM3	SSPM2	SSPM1	SSPM0	70, 73
SSPxCON2	GCEN	ACKSTAT	ACKDT	ACKEN	RCEN	PEN	RSEN	SEN	70, 73
	GCEN	ACKSTAT	ADMSK5(2)	ADMSK4(2)	ADMSK3(2)	ADMSK2(2)	ADMSK1(2)	SEN	70, 73
SSPxSTAT	SMP	CKE	D/$\overline{A}$	P	S	R/$\overline{W}$	UA	BF	70, 73
SSP2BUF	MSSP2 Receive Buffer/Transmit Register								73
SSP2ADD	MSSP2 Address Register (I²C Slave mode), MSSP2 Baud Rate Reload Register (I²C Master mode)								73

Legend: — = unimplemented, read as '0'. Shaded cells are not used by the MSSPx module in I²C™ mode.

Note 1: SSPxMSK shares the same address in SFR space as SSPxADD, but is only accessible in certain I²C Slave mode operations in 7-Bit Masking mode. See **Section 19.5.3.4 "7-Bit Address Masking Mode"** for more details.

2: Alternate bit definitions for use in I²C Slave mode operations only.

3: These bits are only available on 44-pin devices.

© 2011 Microchip Technology Inc.

20.0 ENHANCED UNIVERSAL SYNCHRONOUS ASYNCHRONOUS RECEIVER TRANSMITTER (EUSART)

The Enhanced Universal Synchronous Asynchronous Receiver Transmitter (EUSART) module is one of two serial I/O modules. (Generically, the EUSART is also known as a Serial Communications Interface or SCI.) The EUSART can be configured as a full-duplex asynchronous system that can communicate with peripheral devices, such as CRT terminals and personal computers. It can also be configured as a half-duplex synchronous system that can communicate with peripheral devices, such as A/D or D/A integrated circuits, serial EEPROMs and so on.

The Enhanced USART module implements additional features, including automatic baud rate detection and calibration, automatic wake-up on Sync Break reception and 12-bit Break character transmit. These make it ideally suited for use in Local Interconnect Network bus (LIN/J2602 bus) systems.

All members of the PIC18F46J50 family are equipped with two independent EUSART modules, referred to as EUSART1 and EUSART2. They can be configured in the following modes:

- Asynchronous (full-duplex) with:
  - Auto-wake-up on character reception
  - Auto-baud calibration
  - 12-bit Break character transmission
- Synchronous – Master (half-duplex) with selectable clock polarity
- Synchronous – Slave (half-duplex) with selectable clock polarity

The pins of EUSART1 and EUSART2 are multiplexed with the functions of PORTC (RC6/TX1/CK1/RP17 and RC7/RX1/DT1/SDO1/RP18) and remapped (RPn1/TX2/CK2 and RPn2/RX2/DT2), respectively. In order to configure these pins as an EUSART:

- For EUSART1:
  - SPEN bit (RCSTA1<7>) must be set (= 1)
  - TRISC<7> bit must be set (= 1)
  - TRISC<6> bit must be cleared (= 0) for Asynchronous and Synchronous Master modes
  - TRISC<6> bit must be set (= 1) for Synchronous Slave mode
- For EUSART2:
  - SPEN bit (RCSTA2<7>) must be set (= 1)
  - TRIS bit for RPn2/RX2/DT2 = 1
  - TRIS bit for RPn1/TX2/CK2 = 0 for Asynchronous and Synchronous Master modes
  - TRISC<6> bit must be set (= 1) for Synchronous Slave mode

Note:	The EUSART control will automatically reconfigure the pin from input to output as needed.

The TXx/CKx I/O pins have an optional open-drain output capability. By default, when this pin is used by the EUSART as an output, it will function as a standard push-pull CMOS output. The TXx/CKx I/O pins' open-drain, output feature can be enabled by setting the corresponding UxOD bit in the ODCON2 register. For more details, see **Section 19.3.3 "Open-Drain Output Option"**.

The operation of each Enhanced USART module is controlled through three registers:

- Transmit Status and Control (TXSTAx)
- Receive Status and Control (RCSTAx)
- Baud Rate Control (BAUDCONx)

These are covered in detail in Register 20-1, Register 20-2 and Register 20-3, respectively.

Note:	Throughout this section, references to register and bit names that may be associated with a specific EUSART module are referred to generically by the use of 'x' in place of the specific module number. Thus, "RCSTAx" might refer to the Receive Status register for either EUSART1 or EUSART2.

REGISTER 20-1: TXSTAx: TRANSMIT STATUS AND CONTROL REGISTER (ACCESS FADh, FA8h)

R/W-0	R/W-0	R/W-0	R/W-0	R/W-0	R/W-0	R-1	R/W-0
CSRC	TX9	TXEN(1)	SYNC	SENDB	BRGH	TRMT	TX9D
bit 7							bit 0

Legend:			
R = Readable bit	W = Writable bit	U = Unimplemented bit, read as '0'	
-n = Value at POR	'1' = Bit is set	'0' = Bit is cleared	x = Bit is unknown

bit 7 **CSRC:** Clock Source Select bit

Asynchronous mode:
Don't care.

Synchronous mode:
1 = Master mode (clock generated internally from BRG)
0 = Slave mode (clock from external source)

bit 6 **TX9:** 9-Bit Transmit Enable bit

1 = Selects 9-bit transmission
0 = Selects 8-bit transmission

bit 5 **TXEN:** Transmit Enable bit(1)

1 = Transmit is enabled
0 = Transmit is disabled

bit 4 **SYNC:** EUSART Mode Select bit

1 = Synchronous mode
0 = Asynchronous mode

bit 3 **SENDB:** Send Break Character bit

Asynchronous mode:
1 = Send Sync Break on next transmission (cleared by hardware upon completion)
0 = Sync Break transmission has completed

Synchronous mode:
Don't care.

bit 2 **BRGH:** High Baud Rate Select bit

Asynchronous mode:
1 = High speed
0 = Low speed

Synchronous mode:
Unused in this mode.

bit 1 **TRMT:** Transmit Shift Register Status bit

1 = TSR is empty
0 = TSR is full

bit 0 **TX9D:** 9th bit of Transmit Data

Can be address/data bit or a parity bit.

Note 1: SREN/CREN overrides TXEN in Sync mode.

© 2011 Microchip Technology Inc.

REGISTER 20-2: RCSTAx: RECEIVE STATUS AND CONTROL REGISTER (ACCESS FACh, F9Ch)

R/W-0	R/W-0	R/W-0	R/W-0	R/W-0	R-0	R-0	R-x
SPEN	RX9	SREN	CREN	ADDEN	FERR	OERR	RX9D
bit 7							bit 0

Legend:			
R = Readable bit	W = Writable bit	U = Unimplemented bit, read as '0'	
-n = Value at POR	'1' = Bit is set	'0' = Bit is cleared	x = Bit is unknown

bit 7 **SPEN:** Serial port Enable bit
1 = Serial port is enabled
0 = Serial port is disabled (held in Reset)

bit 6 **RX9:** 9-Bit Receive Enable bit
1 = Selects 9-bit reception
0 = Selects 8-bit reception

bit 5 **SREN:** Single Receive Enable bit
Asynchronous mode:
Don't care.
Synchronous mode – Master:
1 = Enables single receive
0 = Disables single receive
This bit is cleared after reception is complete.
Synchronous mode – Slave:
Don't care.

bit 4 **CREN:** Continuous Receive Enable bit
Asynchronous mode:
1 = Enables receiver
0 = Disables receiver
Synchronous mode:
1 = Enables continuous receive until enable bit, CREN, is cleared (CREN overrides SREN)
0 = Disables continuous receive

bit 3 **ADDEN:** Address Detect Enable bit
Asynchronous mode 9-Bit (RX9 = 1):
1 = Enables address detection, enables interrupt and loads the receive buffer when RSR<8> is set
0 = Disables address detection, all bytes are received and ninth bit can be used as parity bit
Asynchronous mode 8-Bit (RX9 = 0):
Don't care.

bit 2 **FERR:** Framing Error bit
1 = Framing error (can be cleared by reading RCREGx register and receiving next valid byte)
0 = No framing error

bit 1 **OERR:** Overrun Error bit
1 = Overrun error (can be cleared by clearing bit, CREN)
0 = No overrun error

bit 0 **RX9D:** 9th bit of Received Data
This can be address/data bit or a parity bit and must be calculated by user firmware.

REGISTER 20-3: BAUDCONx: BAUD RATE CONTROL REGISTER (ACCESS F7Eh, F7Ch)

R/W-0	R-1	R/W-0	R/W-0	R/W-0	U-0	R/W-0	R/W-0
ABDOVF	RCIDL	RXDTP	TXCKP	BRG16	—	WUE	ABDEN
bit 7							bit 0

Legend:			
R = Readable bit	W = Writable bit	U = Unimplemented bit, read as '0'	
-n = Value at POR	'1' = Bit is set	'0' = Bit is cleared	x = Bit is unknown

bit 7 **ABDOVF:** Auto-Baud Acquisition Rollover Status bit
1 = A BRG rollover has occurred during Auto-Baud Rate Detect mode (must be cleared in software)
0 = No BRG rollover has occurred

bit 6 **RCIDL:** Receive Operation Idle Status bit
1 = Receive operation is Idle
0 = Receive operation is active

bit 5 **RXDTP:** Data/Receive Polarity Select bit
Asynchronous mode:
1 = Receive data (RXx) is inverted (active-low)
0 = Receive data (RXx) is not inverted (active-high)
Synchronous mode:
1 = Data (DTx) is inverted (active-low)
0 = Data (DTx) is not inverted (active-high)

bit 4 **TXCKP:** Synchronous Clock Polarity Select bit
Asynchronous mode:
1 = Idle state for transmit (TXx) is a low level
0 = Idle state for transmit (TXx) is a high level
Synchronous mode:
1 = Idle state for clock (CKx) is a high level
0 = Idle state for clock (CKx) is a low level

bit 3 **BRG16:** 16-Bit Baud Rate Register Enable bit
1 = 16-bit Baud Rate Generator – SPBRGHx and SPBRGx
0 = 8-bit Baud Rate Generator – SPBRGx only (Compatible mode), SPBRGHx value is ignored

bit 2 **Unimplemented:** Read as '0'

bit 1 **WUE:** Wake-up Enable bit
Asynchronous mode:
1 = EUSART will continue to sample the RXx pin – interrupt is generated on falling edge; bit is cleared in hardware on following rising edge
0 = RXx pin not monitored or rising edge detected
Synchronous mode:
Unused in this mode.

bit 0 **ABDEN:** Auto-Baud Detect Enable bit
Asynchronous mode:
1 = Enable baud rate measurement on the next character; requires reception of a Sync field (55h); cleared in hardware upon completion
0 = Baud rate measurement is disabled or completed
Synchronous mode:
Unused in this mode.

© 2011 Microchip Technology Inc.

20.1 Baud Rate Generator (BRG)

The BRG is a dedicated, 8-bit or 16-bit generator that supports both the Asynchronous and Synchronous modes of the EUSART. By default, the BRG operates in 8-bit mode. Setting the BRG16 bit (BAUDCONx<3>) selects 16-bit mode.

The SPBRGHx:SPBRGx register pair controls the period of a free-running timer. In Asynchronous mode, bits, BRGH (TXSTAx<2>) and BRG16 (BAUDCONx<3>), also control the baud rate. In Synchronous mode, BRGH is ignored.

Table 20-1 provides the formula for computation of the baud rate for different EUSART modes, which only apply in Master mode (internally generated clock).

Given the desired baud rate and FOSC, the nearest integer value for the SPBRGHx:SPBRGx registers can be calculated using the formulas in Table 20-1. From this, the error in baud rate can be determined. An example calculation is provided in Example 20-1. Typical baud rates and error values for the various Asynchronous modes are provided in Table 20-2. It may be advantageous to use the high baud rate (BRGH = 1) or the 16-bit BRG to reduce the baud rate error, or achieve a slow baud rate for a fast oscillator frequency.

Writing a new value to the SPBRGHx:SPBRGx registers causes the BRG timer to be reset (or cleared). This ensures the BRG does not wait for a timer overflow before outputting the new baud rate.

When operated in the Synchronous mode, SPBRGH:SPBRG values of 0000h and 0001h are not supported. In the Asynchronous mode, all BRG values may be used.

20.1.1 OPERATION IN POWER-MANAGED MODES

The device clock is used to generate the desired baud rate. When one of the power-managed modes is entered, the new clock source may be operating at a different frequency. This may require an adjustment to the value in the SPBRGx register pair.

20.1.2 SAMPLING

The data on the RXx pin (either RC7/PMA4/RX1/DT1/SDO1/RP18 or RPn/RX2/DT2) is sampled three times by a majority detect circuit to determine if a high or a low level is present at the RXx pin.

TABLE 20-1: BAUD RATE FORMULAS

Configuration Bits			BRG/EUSART Mode	Baud Rate Formula
SYNC	BRG16	BRGH		
0	0	0	8-bit/Asynchronous	FOSC/[64 (n + 1)]
0	0	1	8-bit/Asynchronous	FOSC/[16 (n + 1)]
0	1	0	16-bit/Asynchronous	
0	1	1	16-bit/Asynchronous	FOSC/[4 (n + 1)]
1	0	x	8-bit/Synchronous	
1	1	x	16-bit/Synchronous	

Legend: x = Don't care, n = value of SPBRGHx:SPBRGx register pair

EXAMPLE 20-1: CALCULATING BAUD RATE ERROR

```
For a device with Fosc of 16 MHz, desired baud rate of 9600, Asynchronous mode, and
8-bit BRG:
Desired Baud Rate = Fosc/(64 ([SPBRGHx:SPBRGx] + 1))
Solving for SPBRGHx:SPBRGx:
    X  =  ((Fosc/Desired Baud Rate)/64) – 1
       =  ((16000000/9600)/64) – 1
       =  [25.042] = 25
Calculated Baud Rate=16000000/(64 (25 + 1))
       =  9615
Error  =  (Calculated Baud Rate – Desired Baud Rate)/Desired Baud Rate
       =  (9615 – 9600)/9600 = 0.16%
```

TABLE 20-2: REGISTERS ASSOCIATED WITH BAUD RATE GENERATOR

Name	Bit 7	Bit 6	Bit 5	Bit 4	Bit 3	Bit 2	Bit 1	Bit 0	Reset Values on Page:
TXSTAx	CSRC	TX9	TXEN	SYNC	SENDB	BRGH	TRMT	TX9D	71
RCSTAx	SPEN	RX9	SREN	CREN	ADDEN	FERR	OERR	RX9D	71
BAUDCONx	ABDOVF	RCIDL	RXDTP	TXCKP	BRG16	—	WUE	ABDEN	73
SPBRGHx	EUSARTx Baud Rate Generator Register High Byte								73
SPBRGx	EUSARTx Baud Rate Generator Register Low Byte								71

Legend: — = unimplemented, read as '0'. Shaded cells are not used by the BRG.

© 2011 Microchip Technology Inc.

TABLE 20-3: BAUD RATES FOR ASYNCHRONOUS MODES

BAUD RATE (K)	SYNC = 0, BRGH = 0, BRG16 = 0											
	FOSC = 40.000 MHz			FOSC = 20.000 MHz			FOSC = 10.000 MHz			FOSC = 8.000 MHz		
	Actual Rate (K)	% Error	SPBRG value (decimal)	Actual Rate (K)	% Error	SPBRG value (decimal)	Actual Rate (K)	% Error	SPBRG value (decimal)	Actual Rate (K)	% Error	SPBRG value (decimal)
0.3	—	—	—	—	—	—	—	—	—	—	—	—
1.2	—	—	—	1.221	1.73	255	1.202	0.16	129	1.201	-0.16	103
2.4	2.441	1.73	255	2.404	0.16	129	2.404	0.16	64	2.403	-0.16	51
9.6	9.615	0.16	64	9.766	1.73	31	9.766	1.73	15	9.615	-0.16	12
19.2	19.531	1.73	31	19.531	1.73	15	19.531	1.73	7	—	—	—
57.6	56.818	-1.36	10	62.500	8.51	4	52.083	-9.58	2	—	—	—
115.2	125.000	8.51	4	104.167	-9.58	2	78.125	-32.18	1	—	—	—

BAUD RATE (K)	SYNC = 0, BRGH = 0, BRG16 = 0								
	FOSC = 4.000 MHz			FOSC = 2.000 MHz			FOSC = 1.000 MHz		
	Actual Rate (K)	% Error	SPBRG value (decimal)	Actual Rate (K)	% Error	SPBRG value (decimal)	Actual Rate (K)	% Error	SPBRG value (decimal)
0.3	0.300	0.16	207	0.300	-0.16	103	0.300	-0.16	51
1.2	1.202	0.16	51	1.201	-0.16	25	1.201	-0.16	12
2.4	2.404	0.16	25	2.403	-0.16	12	—	—	—
9.6	8.929	-6.99	6	—	—	—	—	—	—
19.2	20.833	8.51	2	—	—	—	—	—	—
57.6	62.500	8.51	0	—	—	—	—	—	—
115.2	62.500	-45.75	0	—	—	—	—	—	—

BAUD RATE (K)	SYNC = 0, BRGH = 1, BRG16 = 0											
	FOSC = 40.000 MHz			FOSC = 20.000 MHz			FOSC = 10.000 MHz			FOSC = 8.000 MHz		
	Actual Rate (K)	% Error	SPBRG value (decimal)	Actual Rate (K)	% Error	SPBRG value (decimal)	Actual Rate (K)	% Error	SPBRG value (decimal)	Actual Rate (K)	% Error	SPBRG value (decimal)
0.3	—	—	—	—	—	—	—	—	—	—	—	—
1.2	—	—	—	—	—	—	—	—	—	—	—	—
2.4	—	—	—	—	—	—	2.441	1.73	255	2.403	-0.16	207
9.6	9.766	1.73	255	9.615	0.16	129	9.615	0.16	64	9615.	-0.16	51
19.2	19.231	0.16	129	19.231	0.16	64	19.531	1.73	31	19.230	-0.16	25
57.6	58.140	0.94	42	56.818	-1.36	21	56.818	-1.36	10	55.555	3.55	8
115.2	113.636	-1.36	21	113.636	-1.36	10	125.000	8.51	4	—	—	—

BAUD RATE (K)	SYNC = 0, BRGH = 1, BRG16 = 0								
	FOSC = 4.000 MHz			FOSC = 2.000 MHz			FOSC = 1.000 MHz		
	Actual Rate (K)	% Error	SPBRG value (decimal)	Actual Rate (K)	% Error	SPBRG value (decimal)	Actual Rate (K)	% Error	SPBRG value (decimal)
0.3	—	—	—	—	—	—	0.300	-0.16	207
1.2	1.202	0.16	207	1.201	-0.16	103	1.201	-0.16	51
2.4	2.404	0.16	103	2.403	-0.16	51	2.403	-0.16	25
9.6	9.615	0.16	25	9.615	-0.16	12	—	—	—
19.2	19.231	0.16	12	—	—	—	—	—	—
57.6	62.500	8.51	3	—	—	—	—	—	—
115.2	125.000	8.51	1	—	—	—	—	—	—

TABLE 20-3: BAUD RATES FOR ASYNCHRONOUS MODES (CONTINUED)

BAUD RATE (K)	SYNC = 0, BRGH = 0, BRG16 = 1											
	FOSC = 40.000 MHz			FOSC = 20.000 MHz			FOSC = 10.000 MHz			FOSC = 8.000 MHz		
	Actual Rate (K)	% Error	SPBRG value (decimal)	Actual Rate (K)	% Error	SPBRG value (decimal)	Actual Rate (K)	% Error	SPBRG value (decimal)	Actual Rate (K)	% Error	SPBRG value (decimal)
0.3	0.300	0.00	8332	0.300	0.02	4165	0.300	0.02	2082	0.300	-0.04	1665
1.2	1.200	0.02	2082	1.200	-0.03	1041	1.200	-0.03	520	1.201	-0.16	415
2.4	2.402	0.06	1040	2.399	-0.03	520	2.404	0.16	259	2.403	-0.16	207
9.6	9.615	0.16	259	9.615	0.16	129	9.615	0.16	64	9.615	-0.16	51
19.2	19.231	0.16	129	19.231	0.16	64	19.531	1.73	31	19.230	-0.16	25
57.6	58.140	0.94	42	56.818	-1.36	21	56.818	-1.36	10	55.555	3.55	8
115.2	113.636	-1.36	21	113.636	-1.36	10	125.000	8.51	4	—	—	—

BAUD RATE (K)	SYNC = 0, BRGH = 0, BRG16 = 1								
	FOSC = 4.000 MHz			FOSC = 2.000 MHz			FOSC = 1.000 MHz		
	Actual Rate (K)	% Error	SPBRG value (decimal)	Actual Rate (K)	% Error	SPBRG value (decimal)	Actual Rate (K)	% Error	SPBRG value (decimal)
0.3	0.300	0.04	832	0.300	-0.16	415	0.300	-0.16	207
1.2	1.202	0.16	207	1.201	-0.16	103	1.201	-0.16	51
2.4	2.404	0.16	103	2.403	-0.16	51	2.403	-0.16	25
9.6	9.615	0.16	25	9.615	-0.16	12	—	—	—
19.2	19.231	0.16	12	—	—	—	—	—	—
57.6	62.500	8.51	3	—	—	—	—	—	—
115.2	125.000	8.51	1	—	—	—	—	—	—

BAUD RATE (K)	SYNC = 0, BRGH = 1, BRG16 = 1 or SYNC = 1, BRG16 = 1											
	FOSC = 40.000 MHz			FOSC = 20.000 MHz			FOSC = 10.000 MHz			FOSC = 8.000 MHz		
	Actual Rate (K)	% Error	SPBRG value (decimal)	Actual Rate (K)	% Error	SPBRG value (decimal)	Actual Rate (K)	% Error	SPBRG value (decimal)	Actual Rate (K)	% Error	SPBRG value (decimal)
0.3	0.300	0.00	33332	0.300	0.00	16665	0.300	0.00	8332	0.300	-0.01	6665
1.2	1.200	0.00	8332	1.200	0.02	4165	1.200	0.02	2082	1.200	-0.04	1665
2.4	2.400	0.02	4165	2.400	0.02	2082	2.402	0.06	1040	2.400	-0.04	832
9.6	9.606	0.06	1040	9.596	-0.03	520	9.615	0.16	259	9.615	-0.16	207
19.2	19.193	-0.03	520	19.231	0.16	259	19.231	0.16	129	19.230	-0.16	103
57.6	57.803	0.35	172	57.471	-0.22	86	58.140	0.94	42	57.142	0.79	34
115.2	114.943	-0.22	86	116.279	0.94	42	113.636	-1.36	21	117.647	-2.12	16

BAUD RATE (K)	SYNC = 0, BRGH = 1, BRG16 = 1 or SYNC = 1, BRG16 = 1								
	FOSC = 4.000 MHz			FOSC = 2.000 MHz			FOSC = 1.000 MHz		
	Actual Rate (K)	% Error	SPBRG value (decimal)	Actual Rate (K)	% Error	SPBRG value (decimal)	Actual Rate (K)	% Error	SPBRG value (decimal)
0.3	0.300	0.01	3332	0.300	-0.04	1665	0.300	-0.04	832
1.2	1.200	0.04	832	1.201	-0.16	415	1.201	-0.16	207
2.4	2.404	0.16	415	2.403	-0.16	207	2.403	-0.16	103
9.6	9.615	0.16	103	9.615	-0.16	51	9.615	-0.16	25
19.2	19.231	0.16	51	19.230	-0.16	25	19.230	-0.16	12
57.6	58.824	2.12	16	55.555	3.55	8	—	—	—
115.2	111.111	-3.55	8	—	—	—	—	—	—

© 2011 Microchip Technology Inc.

20.1.3 AUTO-BAUD RATE DETECT

The Enhanced USART module supports the automatic detection and calibration of baud rate. This feature is active only in Asynchronous mode and while the WUE bit is clear.

The automatic baud rate measurement sequence (Figure 20-1) begins whenever a Start bit is received and the ABDEN bit is set. The calculation is self-averaging.

In the Auto-Baud Rate Detect (ABD) mode, the clock to the BRG is reversed. Rather than the BRG clocking the incoming RXx signal, the RXx signal is timing the BRG. In ABD mode, the internal BRG is used as a counter to time the bit period of the incoming serial byte stream.

Once the ABDEN bit is set, the state machine will clear the BRG and look for a Start bit. The ABD must receive a byte with the value, 55h (ASCII “U”, which is also the LIN/J2602 bus Sync character), in order to calculate the proper bit rate. The measurement is taken over both a low and high bit time in order to minimize any effects caused by asymmetry of the incoming signal. After a Start bit, the SPBRGx begins counting up, using the preselected clock source on the first rising edge of RXx. After eight bits on the RXx pin or the fifth rising edge, an accumulated value, totalling the proper BRG period, is left in the SPBRGHx:SPBRGx register pair. Once the 5th edge is seen (this should correspond to the Stop bit), the ABDEN bit is automatically cleared.

If a rollover of the BRG occurs (an overflow from FFFFh to 0000h), the event is trapped by the ABDOVF status bit (BAUDCONx<7>). It is set in hardware by BRG rollovers and can be set or cleared by the user in software. ABD mode remains active after rollover events and the ABDEN bit remains set (Figure 20-2).

While calibrating the baud rate period, the BRG registers are clocked at 1/8th the preconfigured clock rate. Note that the BRG clock can be configured by the BRG16 and BRGH bits. The BRG16 bit must be set to use both SPBRGx and SPBRGHx as a 16-bit counter. This allows the user to verify that no carry occurred for 8-bit modes by checking for 00h in the SPBRGHx register. Refer to Table 20-4 for counter clock rates to the BRG.

While the ABD sequence takes place, the EUSART state machine is held in Idle. The RCxIF interrupt is set once the fifth rising edge on RXx is detected. The value in the RCREGx needs to be read to clear the RCxIF interrupt. The contents of RCREGx should be discarded.

Note 1: If the WUE bit is set with the ABDEN bit, Auto-Baud Rate Detection will occur on the byte *following* the Break character.

2: It is up to the user to determine that the incoming character baud rate is within the range of the selected BRG clock source. Some combinations of oscillator frequency and EUSART baud rates are not possible due to bit error rates. Overall system timing and communication baud rates must be taken into consideration when using the Auto-Baud Rate Detection feature.

3: To maximize the baud rate range, it is recommended to set the BRG16 bit if the auto-baud feature is used.

TABLE 20-4: BRG COUNTER CLOCK RATES

BRG16	BRGH	BRG Counter Clock
0	0	FOSC/512
0	1	FOSC/128
1	0	FOSC/128
1	1	FOSC/32

Note: During the ABD sequence, SPBRGx and SPBRGHx are both used as a 16-bit counter, independent of the BRG16 setting.

20.1.3.1 ABD and EUSART Transmission

Since the BRG clock is reversed during ABD acquisition, the EUSART transmitter cannot be used during ABD. This means that whenever the ABDEN bit is set, TXREGx cannot be written to. Users should also ensure that ABDEN does not become set during a transmit sequence. Failing to do this may result in unpredictable EUSART operation.

FIGURE 20-1: AUTOMATIC BAUD RATE CALCULATION

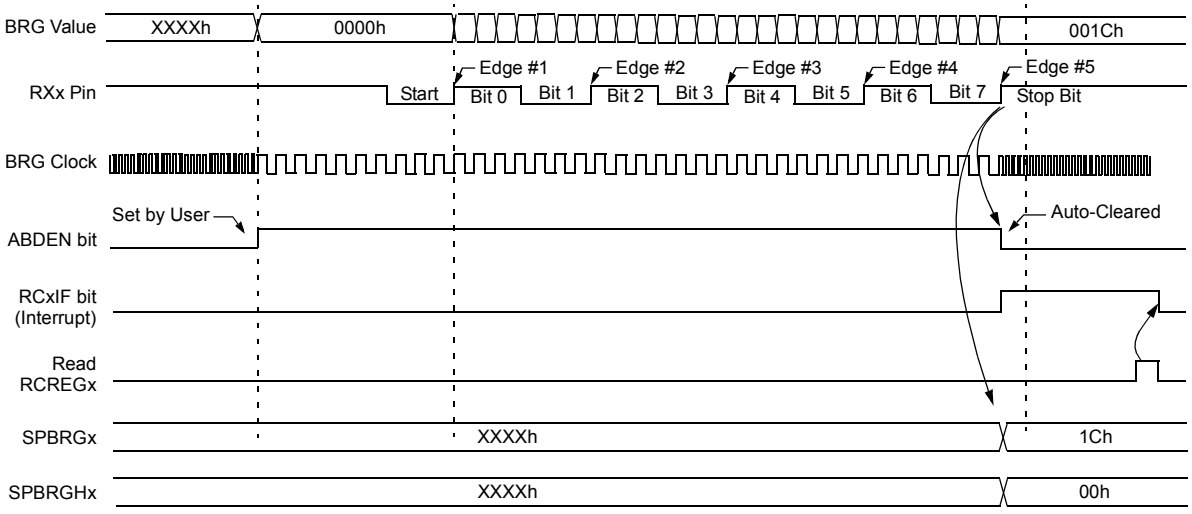

Note: The ABD sequence requires the EUSART module to be configured in Asynchronous mode and WUE = 0.

FIGURE 20-2: BRG OVERFLOW SEQUENCE

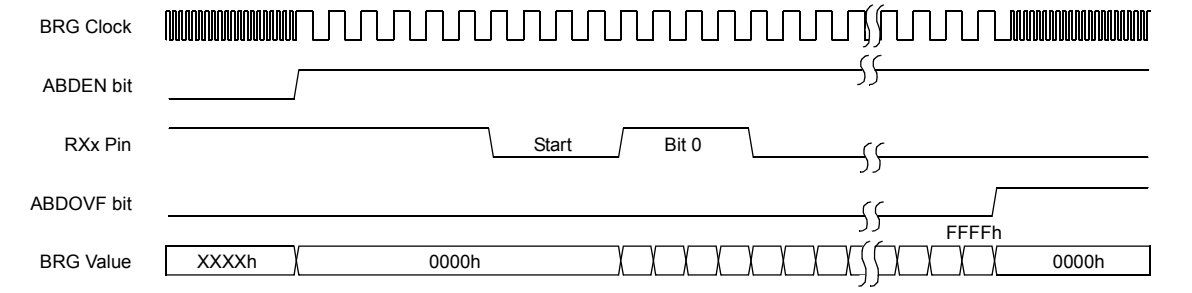

© 2011 Microchip Technology Inc.

20.2 EUSART Asynchronous Mode

The Asynchronous mode of operation is selected by clearing the SYNC bit (TXSTAx<4>). In this mode, the EUSART uses standard Non-Return-to-Zero (NRZ) format (one Start bit, eight or nine data bits and one Stop bit). The most common data format is 8 bits. An on-chip, dedicated 8-bit/16-bit BRG can be used to derive standard baud rate frequencies from the oscillator.

The EUSART transmits and receives the LSb first. The EUSART's transmitter and receiver are functionally independent but use the same data format and baud rate. The BRG produces a clock, either x16 or x64 of the bit shift rate, depending on the BRGH and BRG16 bits (TXSTAx<2> and BAUDCONx<3>). Parity is not supported by the hardware but can be implemented in software and stored as the ninth data bit.

When operating in Asynchronous mode, the EUSART module consists of the following important elements:

- Baud Rate Generator
- Sampling Circuit
- Asynchronous Transmitter
- Asynchronous Receiver
- Auto-Wake-up on Sync Break Character
- 12-Bit Break Character Transmit
- Auto-Baud Rate Detection

20.2.1 EUSART ASYNCHRONOUS TRANSMITTER

Figure 20-3 displays the EUSART transmitter block diagram.

The heart of the transmitter is the Transmit (Serial) Shift Register (TSR). The Shift register obtains its data from the Read/Write Transmit Buffer register, TXREGx. The TXREGx register is loaded with data in software. The TSR register is not loaded until the Stop bit has been transmitted from the previous load. As soon as the Stop bit is transmitted, the TSR is loaded with new data from the TXREGx register (if available).

Once the TXREGx register transfers the data to the TSR register (occurs in one TCY), the TXREGx register is empty and the TXxIF flag bit is set. This interrupt can be enabled or disabled by setting or clearing the interrupt enable bit, TXxIE. TXxIF will be set regardless of the state of TXxIE; it cannot be cleared in software. TXxIF is also not cleared immediately upon loading TXREGx, but becomes valid in the second instruction cycle following the load instruction. Polling TXxIF immediately following a load of TXREGx will return invalid results.

While TXxIF indicates the status of the TXREGx register; another bit, TRMT (TXSTAx<1>), shows the status of the TSR register. TRMT is a read-only bit, which is set when the TSR register is empty. No interrupt logic is tied to this bit so the user has to poll this bit in order to determine if the TSR register is empty.

Note 1:	The TSR register is not mapped in data memory, so it is not available to the user.
2:	Flag bit, TXxIF, is set when enable bit, TXEN, is set.

To set up an Asynchronous Transmission:

1. Initialize the SPBRGHx:SPBRGx registers for the appropriate baud rate. Set or clear the BRGH and BRG16 bits, as required, to achieve the desired baud rate.
2. Enable the asynchronous serial port by clearing bit, SYNC, and setting bit, SPEN.
3. If interrupts are desired, set enable bit, TXxIE.
4. If 9-bit transmission is desired, set transmit bit, TX9. Can be used as address/data bit.
5. Enable the transmission by setting bit, TXEN, which will also set bit, TXxIF.
6. If 9-bit transmission is selected, the ninth bit should be loaded in bit, TX9D.
7. Load data to the TXREGx register (starts transmission).
8. If using interrupts, ensure that the GIE and PEIE bits in the INTCON register (INTCON<7:6>) are set.

FIGURE 20-3: EUSART TRANSMIT BLOCK DIAGRAM

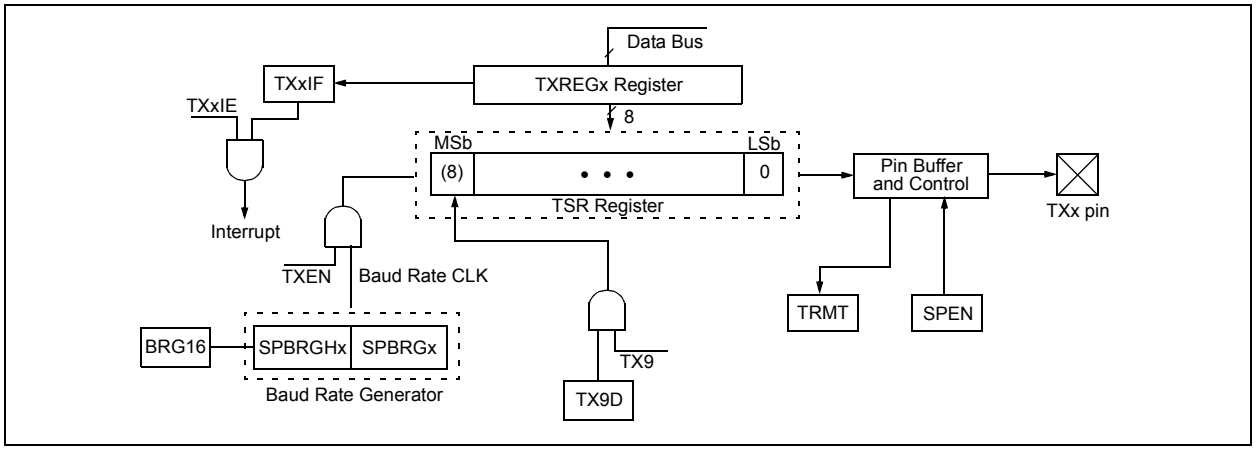

FIGURE 20-4: ASYNCHRONOUS TRANSMISSION

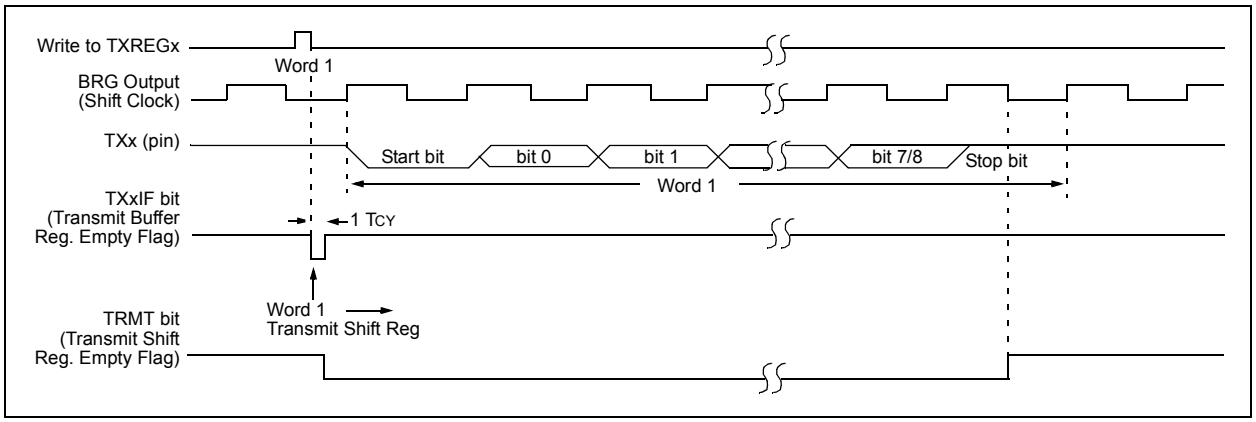

FIGURE 20-5: ASYNCHRONOUS TRANSMISSION (BACK-TO-BACK)

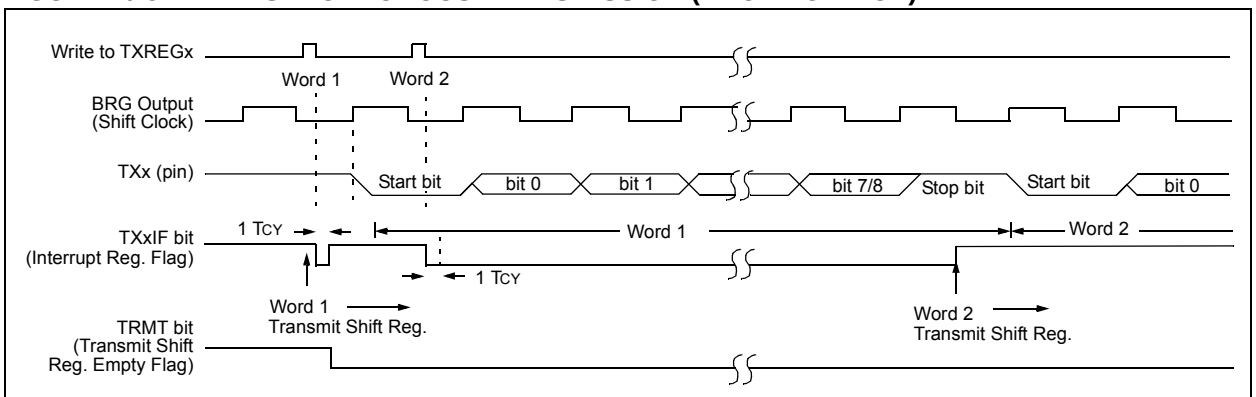

Note: This timing diagram shows two consecutive transmissions.

© 2011 Microchip Technology Inc.

TABLE 20-5: REGISTERS ASSOCIATED WITH ASYNCHRONOUS TRANSMISSION

Name	Bit 7	Bit 6	Bit 5	Bit 4	Bit 3	Bit 2	Bit 1	Bit 0	Reset Values on Page:
INTCON	GIE/GIEH	PEIE/GIEL	TMR0IE	INT0IE	RBIE	TMR0IF	INT0IF	RBIF	69
PIR1	PMPIF(1)	ADIF	RC1IF	TX1IF	SSP1IF	CCP1IF	TMR2IF	TMR1IF	72
PIE1	PMPIE(1)	ADIE	RC1IE	TX1IE	SSP1IE	CCP1IE	TMR2IE	TMR1IE	72
IPR1	PMPIP(1)	ADIP	RC1IP	TX1IP	SSP1IP	CCP1IP	TMR2IP	TMR1IP	72
PIR3	SSP2IF	BCL2IF	RC2IF	TX2IF	TMR4IF	CTMUIF	TMR3GIF	RTCCIF	72
PIE3	SSP2IE	BCL2IE	RC2IE	TX2IE	TMR4IE	CTMUIE	TMR3GIE	RTCCIE	72
IPR3	SSP2IP	BCL2IP	RC2IP	TX2IP	TMR4IP	CTMUIP	TMR3GIP	RTCCIP	72
RCSTAx	SPEN	RX9	SREN	CREN	ADDEN	FERR	OERR	RX9D	71
TXREGx	EUSARTx Transmit Register								71
TXSTAx	CSRC	TX9	TXEN	SYNC	SENDB	BRGH	TRMT	TX9D	71
BAUDCONx	ABDOVF	RCIDL	RXDTP	TXDTP	BRG16	—	WUE	ABDEN	73
SPBRGHx	EUSARTx Baud Rate Generator Register High Byte								71
SPBRGx	EUSARTx Baud Rate Generator Register Low Byte								71
ODCON2	—	—	—	—	—	—	U2OD	U1OD	74

Legend: – = unimplemented locations read as '0'. Shaded cells are not used for asynchronous transmission.

Note 1: These bits are only available on 44-pin devices.

20.2.2 EUSART ASYNCHRONOUS RECEIVER

The receiver block diagram is displayed in Figure 20-6. The data is received on the RXx pin and drives the data recovery block. The data recovery block is actually a high-speed shifter operating at x16 times the baud rate, whereas the main receive serial shifter operates at the bit rate or at FOSC. This mode would typically be used in RS-232 systems.

20.2.2.1 Receiving Data

The receiver data recovery circuit initiates character reception on the falling edge of the first bit. The first bit, also known as the Start bit, is always a zero (after accounting for the RXDTP setting). Following the Start bit will be the Least Significant bit of the data character being received. As each bit is received, the value will be sampled and shifted into the Receive Shift Register (RSR). After all 8 or 9 data bits (user-selectable option) of the character have been shifted in, one final bit time is measured and the level is sampled. This is the Stop bit, which should always be a '1' (after accounting for the RXDTP setting). If the data recovery circuit samples a '0' in the Stop bit position, then a Framing Error (FERR) is set for this character; otherwise, the framing error is cleared for this character.

Once all data bits of the character and the Stop bit have been received, the data bits in the RSR will immediately be transferred to a two-character First-In-First-Out (FIFO) memory. The FIFO buffering allows reception of two complete characters before software is required to service the EUSART receiver. The RSR register is not directly accessible by software. Firmware can read data from the FIFO by reading the RCREGx register. Each firmware initiated read from the RCREGx register will advance the FIFO by one character, and will clear the Receive Interrupt Flag (RCxIF), if no additional data exists in the FIFO.

20.2.2.2 Receive Overrun Error

If the user firmware allows the FIFO to become full, and a third character is received before the firmware reads from RCREGx, a buffer overrun error condition will occur. In this case, the hardware will block the RSR contents (the third byte received) from being copied into the receive FIFO, the character will be lost and the OERR status bit in the RCSTAx register will become set. If an OERR condition is allowed to occur, firmware must clear the condition by clearing and then resetting CREN, before additional characters can be successfully received.

Note:	If the receive FIFO is overrun, no additional characters will be received until the overrun condition is cleared.

20.2.2.3 Setting Up Asynchronous Receive

To set up an Asynchronous Reception:

1. Initialize the SPBRGHx:SPBRGx registers for the appropriate baud rate. Set or clear the BRGH and BRG16 bits, as required, to achieve the desired baud rate.
2. Enable the asynchronous serial port by clearing bit, SYNC, and setting bit, SPEN.
3. If interrupts are desired, set enable bit, RCxIE.
4. If 9-bit reception is desired, set bit, RX9.
5. Enable the reception by setting bit, CREN.
6. Flag bit, RCxIF, will be set when reception is complete and an interrupt will be generated if enable bit, RCxIE, was set.
7. Read the RCSTAx register to get the ninth bit (if enabled) and determine if any error occurred during reception.
8. Read the 8-bit received data by reading the RCREGx register.
9. If any error occurred, clear the error by clearing enable bit, CREN.
10. If using interrupts, ensure that the GIE and PEIE bits in the INTCON register (INTCON<7:6>) are set.

20.2.2.4 Setting Up 9-Bit Mode with Address Detect

This mode would typically be used in RS-485 systems. To set up an Asynchronous Reception with Address Detect Enable:

1. Initialize the SPBRGHx:SPBRGx registers for the appropriate baud rate. Set or clear the BRGH and BRG16 bits, as required, to achieve the desired baud rate.
2. Enable the asynchronous serial port by clearing the SYNC bit and setting the SPEN bit.
3. If interrupts are required, set the RCEN bit and select the desired priority level with the RCxIP bit.
4. Set the RX9 bit to enable 9-bit reception.
5. Set the ADDEN bit to enable address detect.
6. Enable reception by setting the CREN bit.
7. The RCxIF bit will be set when reception is complete. The interrupt will be Acknowledged if the RCxIE and GIE bits are set.
8. Read the RCSTAx register to determine if any error occurred during reception, as well as read Bit 9 of data (if applicable).
9. Read RCREGx to determine if the device is being addressed.
10. If any error occurred, clear the CREN bit.
11. If the device has been addressed, clear the ADDEN bit to allow all received data into the receive buffer and interrupt the CPU.

© 2011 Microchip Technology Inc.

FIGURE 20-6: EUSARTx RECEIVE BLOCK DIAGRAM

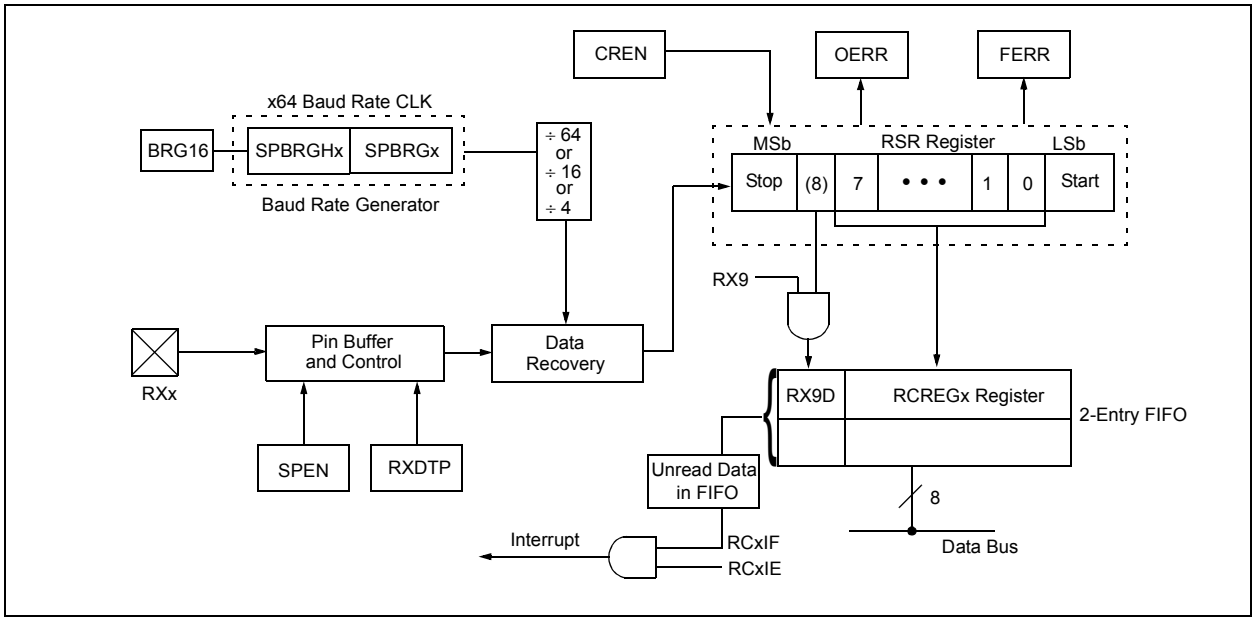

FIGURE 20-7: ASYNCHRONOUS RECEPTION

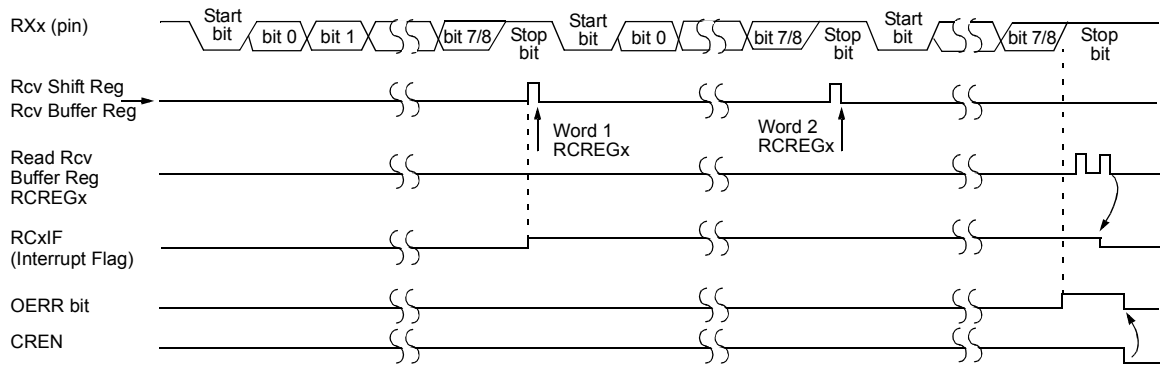

Note: This timing diagram shows three words appearing on the RXx input. The RCREGx (Receive Buffer) is read after the third word, causing the OERR (Overrun) bit to be set.

TABLE 20-6: REGISTERS ASSOCIATED WITH ASYNCHRONOUS RECEPTION

Name	Bit 7	Bit 6	Bit 5	Bit 4	Bit 3	Bit 2	Bit 1	Bit 0	Reset Values on Page:
INTCON	GIE/GIEH	PEIE/GIEL	TMR0IE	INT0IE	RBIE	TMR0IF	INT0IF	RBIF	69
PIR1	PMPIF(1)	ADIF	RC1IF	TX1IF	SSP1IF	CCP1IF	TMR2IF	TMR1IF	72
PIE1	PMPIE(1)	ADIE	RC1IE	TX1IE	SSP1IE	CCP1IE	TMR2IE	TMR1IE	72
IPR1	PMPIP(1)	ADIP	RC1IP	TX1IP	SSP1IP	CCP1IP	TMR2IP	TMR1IP	72
PIR3	SSP2IF	BCL2IF	RC2IF	TX2IF	TMR4IF	CTMUIF	TMR3GIF	RTCCIF	72
PIE3	SSP2IE	BCL2IE	RC2IE	TX2IE	TMR4IE	CTMUIE	TMR3GIE	RTCCIE	72
IPR3	SSP2IP	BCL2IP	RC2IP	TX2IP	TMR4IP	CTMUIP	TMR3GIP	RTCCIP	72
RCSTAx	SPEN	RX9	SREN	CREN	ADDEN	FERR	OERR	RX9D	71
RCREGx	EUSARTx Receive Register								71
TXSTAx	CSRC	TX9	TXEN	SYNC	SENDB	BRGH	TRMT	TX9D	71
BAUDCONx	ABDOVF	RCIDL	RXDTP	TXCKP	BRG16	—	WUE	ABDEN	73
SPBRGHx	EUSARTx Baud Rate Generator Register High Byte								71
SPBRGx	EUSARTx Baud Rate Generator Register Low Byte								71

Legend: — = unimplemented locations read as '0'. Shaded cells are not used for asynchronous reception.

Note 1: These bits are only available on 44-pin devices.

20.2.3 AUTO-WAKE-UP ON SYNC BREAK CHARACTER

During Sleep mode, all clocks to the EUSART are suspended. Because of this, the BRG is inactive and a proper byte reception cannot be performed. The auto-wake-up feature allows the controller to wake-up due to activity on the RXx/DTx line while the EUSART is operating in Asynchronous mode.

The auto-wake-up feature is enabled by setting the WUE bit (BAUDCONx<1>). Once set, the typical receive sequence on RXx/DTx is disabled and the EUSART remains in an Idle state, monitoring for a wake-up event independent of the CPU mode. A wake-up event consists of a high-to-low transition on the RXx/DTx line. (This coincides with the start of a Sync Break or a Wake-up Signal character for the LIN/J2602 support protocol.)

Following a wake-up event, the module generates an RCxIF interrupt. The interrupt is generated synchronously to the Q clocks in normal operating modes (Figure 20-8) and asynchronously if the device is in Sleep mode (Figure 20-9). The interrupt condition is cleared by reading the RCREGx register.

The WUE bit is automatically cleared once a low-to-high transition is observed on the RXx line following the wake-up event. At this point, the EUSART module is in Idle mode and returns to normal operation. This signals to the user that the Sync Break event is over.

20.2.3.1 Special Considerations Using Auto-Wake-up

Since auto-wake-up functions by sensing rising edge transitions on RXx/DTx, information with any state changes before the Stop bit may signal a false End-of-Character (EOC) and cause data or framing errors. To work properly, therefore, the initial character in the transmission must be all '0's. This can be 00h (8 bits) for standard RS-232 devices or 000h (12 bits) for LIN/J2602 bus.

Oscillator start-up time must also be considered, especially in applications using oscillators with longer start-up intervals (i.e., HS or HSPLL mode). The Sync Break (or Wake-up Signal) character must be of sufficient length, and be followed by a sufficient interval, to allow enough time for the selected oscillator to start and provide proper initialization of the EUSART.

© 2011 Microchip Technology Inc.

20.2.3.2 Special Considerations Using the WUE Bit

The timing of WUE and RCxIF events may cause some confusion when it comes to determining the validity of received data. As noted, setting the WUE bit places the EUSART in an Idle mode. The wake-up event causes a receive interrupt by setting the RCxIF bit. The WUE bit is cleared after this when a rising edge is seen on RXx/DTx. The interrupt condition is then cleared by reading the RCREGx register. Ordinarily, the data in RCREGx will be dummy data and should be discarded.

The fact that the WUE bit has been cleared (or is still set) and the RCxIF flag is set should not be used as an indicator of the integrity of the data in RCREGx. Users should consider implementing a parallel method in firmware to verify received data integrity.

To assure that no actual data is lost, check the RCIDL bit to verify that a receive operation is not in process. If a receive operation is not occurring, the WUE bit may then be set just prior to entering the Sleep mode.

FIGURE 20-8: AUTO-WAKE-UP BIT (WUE) TIMINGS DURING NORMAL OPERATION

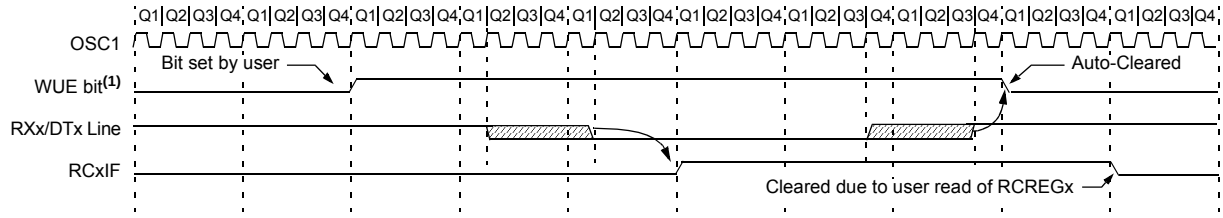

Note 1: The EUSART remains in Idle while the WUE bit is set.

FIGURE 20-9: AUTO-WAKE-UP BIT (WUE) TIMINGS DURING SLEEP

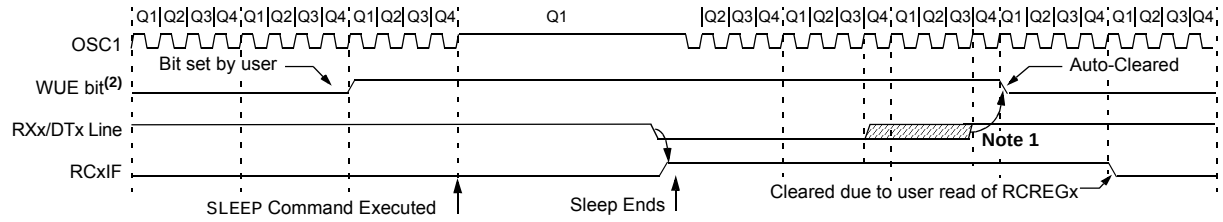

Note 1: If the wake-up event requires long oscillator warm-up time, the auto-clear of the WUE bit can occur before the oscillator is ready. This sequence should not depend on the presence of Q clocks.

2: The EUSART remains in Idle while the WUE bit is set.

20.2.4 BREAK CHARACTER SEQUENCE

The EUSART module has the capability of sending the special Break character sequences that are required by the LIN/J2602 bus standard. The Break character transmit consists of a Start bit, followed by twelve '0' bits and a Stop bit. The Frame Break character is sent whenever the SENDB and TXEN bits (TXSTAx<3> and TXSTAx<5>) are set while the Transmit Shift Register is loaded with data.

Note that the value of data written to TXREGx will be ignored and all '0's will be transmitted.

The SENDB bit is automatically reset by hardware after the corresponding Stop bit is sent. This allows the user to preload the transmit FIFO with the next transmit byte, following the Break character (typically, the Sync character in the LIN/J2602 specification).

Note that the data value written to the TXREGx for the Break character is ignored. The write simply serves the purpose of initiating the proper sequence.

The TRMT bit indicates when the transmit operation is active or Idle, just as it does during normal transmission. See Figure 20-10 for the timing of the Break character sequence.

20.2.4.1 Break and Sync Transmit Sequence

The following sequence will send a message frame header made up of a Break, followed by an Auto-Baud Sync byte. This sequence is typical of a LIN/J2602 bus master.

1. Configure the EUSART for the desired mode.
2. Set the TXEN and SENDB bits to set up the Break character.
3. Load the TXREGx with a dummy character to initiate transmission (the value is ignored).
4. Write '55h' to TXREGx to load the Sync character into the transmit FIFO buffer.
5. After the Break has been sent, the SENDB bit is reset by hardware. The Sync character now transmits in the preconfigured mode.

When the TXREGx becomes empty, as indicated by the TXxIF, the next data byte can be written to TXREGx.

20.2.5 RECEIVING A BREAK CHARACTER

The Enhanced USART module can receive a Break character in two ways.

The first method forces configuration of the baud rate at a frequency of 9/13 the typical speed. This allows for the Stop bit transition to be at the correct sampling location (13 bits for Break versus Start bit and 8 data bits for typical data).

The second method uses the auto-wake-up feature described in **Section 20.2.3 "Auto-Wake-up on Sync Break Character"**. By enabling this feature, the EUSART will sample the next two transitions on RXx/DTx, cause an RCxIF interrupt and receive the next data byte followed by another interrupt.

Note that following a Break character, the user will typically want to enable the Auto-Baud Rate Detect feature. For both methods, the user can set the ABDEN bit once the TXxIF interrupt is observed.

FIGURE 20-10: SEND BREAK CHARACTER SEQUENCE

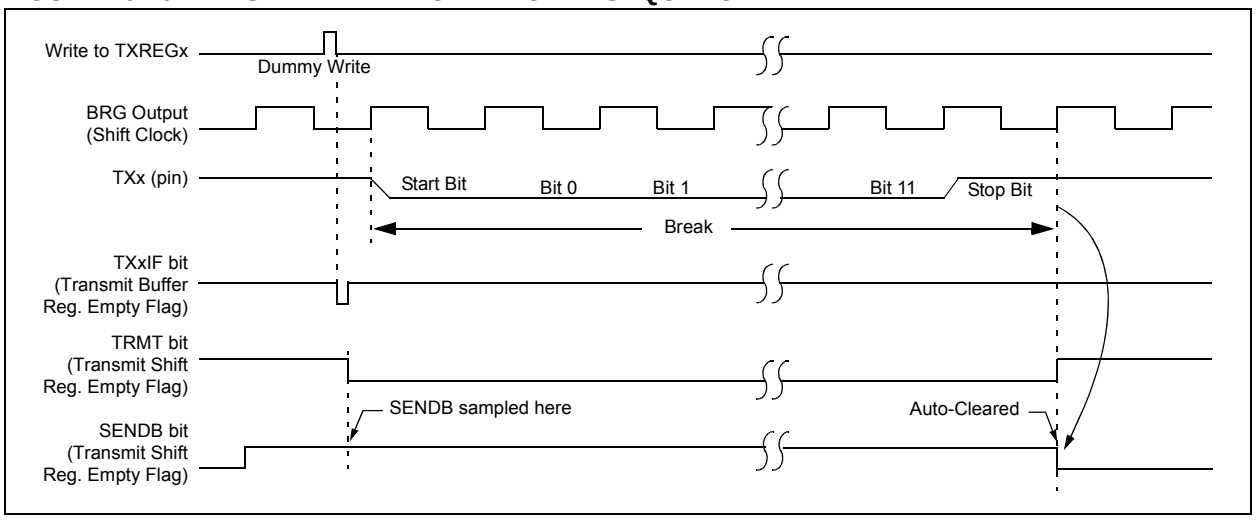

© 2011 Microchip Technology Inc.

20.3 EUSART Synchronous Master Mode

The Synchronous Master mode is entered by setting the CSRC bit (TXSTAx<7>). In this mode, the data is transmitted in a half-duplex manner (i.e., transmission and reception do not occur at the same time). When transmitting data, the reception is inhibited and vice versa. Synchronous mode is entered by setting bit, SYNC (TXSTAx<4>). In addition, enable bit, SPEN (RCSTAx<7>), is set in order to configure the TXx and RXx pins to CKx (clock) and DTx (data) lines, respectively.

The Master mode indicates that the processor transmits the master clock on the CKx line. Clock polarity is selected with the TXCKP bit (BAUDCONx<4>). Setting TXCKP sets the Idle state on CKx as high, while clearing the bit sets the Idle state as low. This option is provided to support Microwire devices with this module.

20.3.1 EUSART SYNCHRONOUS MASTER TRANSMISSION

The EUSART transmitter block diagram is shown in Figure 20-3. The heart of the transmitter is the Transmit (Serial) Shift Register (TSR). The Shift register obtains its data from the Read/Write Transmit Buffer register, TXREGx. The TXREGx register is loaded with data in software. The TSR register is not loaded until the last bit has been transmitted from the previous load. As soon as the last bit is transmitted, the TSR is loaded with new data from the TXREGx (if available).

Once the TXREGx register transfers the data to the TSR register (occurs in one TCY), the TXREGx is empty and the TXxIF flag bit is set. The interrupt can be enabled or disabled by setting or clearing the interrupt enable bit, TXxIE. TXxIF is set regardless of the state of enable bit, TXxIE; it cannot be cleared in software. It will reset only when new data is loaded into the TXREGx register.

While flag bit, TXxIF, indicates the status of the TXREGx register, another bit, TRMT (TXSTAx<1>), shows the status of the TSR register. TRMT is a read-only bit which is set when the TSR is empty. No interrupt logic is tied to this bit, so the user must poll this bit in order to determine if the TSR register is empty. The TSR is not mapped in data memory so it is not available to the user.

To set up a Synchronous Master Transmission:

1. Initialize the SPBRGHx:SPBRGx registers for the appropriate baud rate. Set or clear the BRG16 bit, as required, to achieve the required baud rate.
2. Enable the synchronous master serial port by setting bits, SYNC, SPEN and CSRC.
3. If interrupts are desired, set enable bit, TXxIE.
4. If 9-bit transmission is required, set bit, TX9.
5. Enable the transmission by setting bit, TXEN.
6. If 9-bit transmission is selected, the ninth bit should be loaded in bit, TX9D.
7. Start transmission by loading data to the TXREGx register.
8. If using interrupts, ensure that the GIE and PEIE bits in the INTCON register (INTCON<7:6>) are set.

FIGURE 20-11: SYNCHRONOUS TRANSMISSION

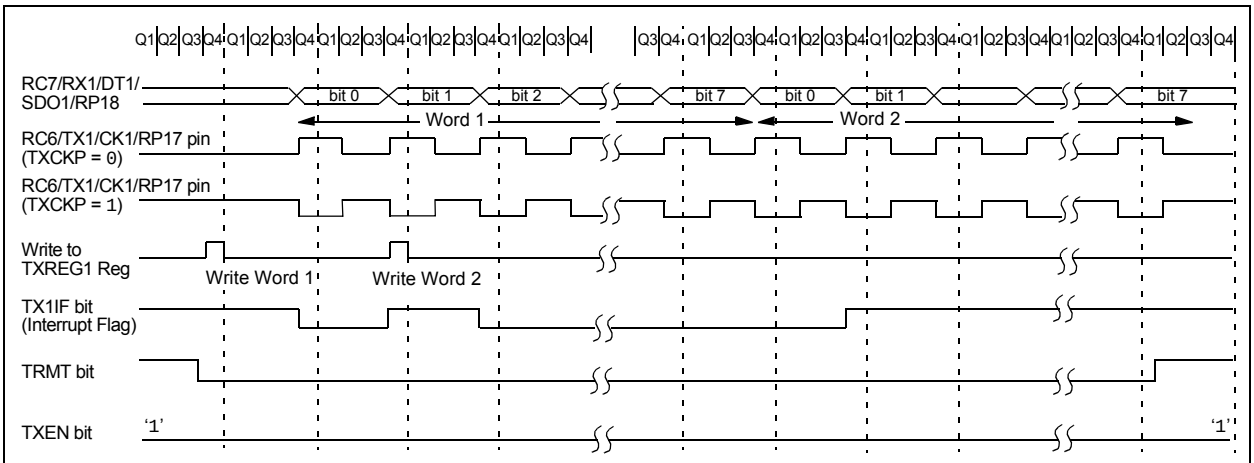

Note: Sync Master mode, SPBRGx = 0, continuous transmission of two 8-bit words. This example is equally applicable to EUSART2 (RPn1/TX2/CK2 and RPn2/RX2/DT2).

FIGURE 20-12: SYNCHRONOUS TRANSMISSION (THROUGH TXEN)

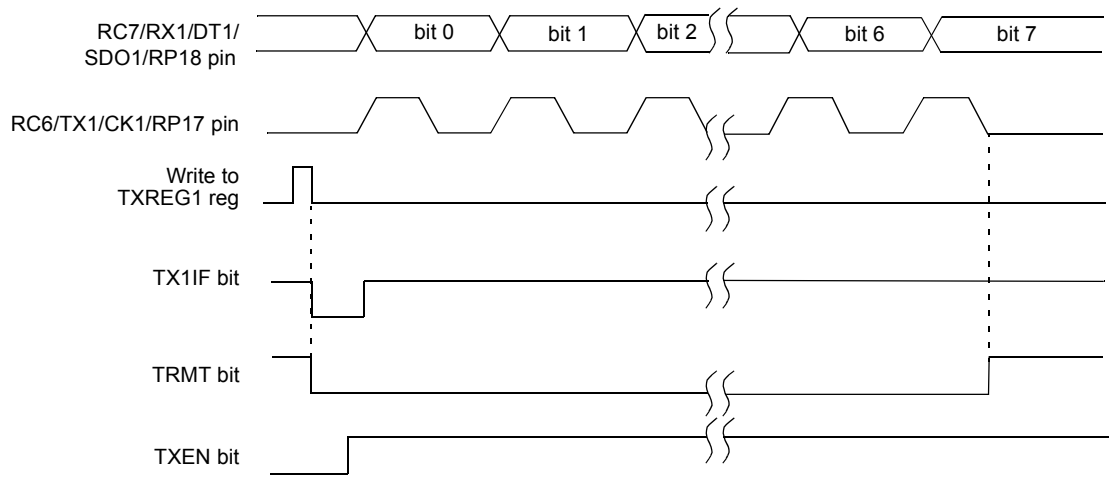

Note: This example is equally applicable to EUSART2 (RPn1/TX2/CK2 and RPn2/RX2/DT2).

TABLE 20-7: REGISTERS ASSOCIATED WITH SYNCHRONOUS MASTER TRANSMISSION

Name	Bit 7	Bit 6	Bit 5	Bit 4	Bit 3	Bit 2	Bit 1	Bit 0	Reset Values on Page:
INTCON	GIE/GIEH	PEIE/GIEL	TMR0IE	INT0IE	RBIE	TMR0IF	INT0IF	RBIF	69
PIR1	PMPIF(1)	ADIF	RC1IF	TX1IF	SSP1IF	CCP1IF	TMR2IF	TMR1IF	72
PIE1	PMPIE(1)	ADIE	RC1IE	TX1IE	SSP1IE	CCP1IE	TMR2IE	TMR1IE	72
IPR1	PMPIP(1)	ADIP	RC1IP	TX1IP	SSP1IP	CCP1IP	TMR2IP	TMR1IP	72
PIR3	SSP2IF	BCL2IF	RC2IF	TX2IF	TMR4IF	CTMUIF	TMR3GIF	RTCCIF	72
PIE3	SSP2IE	BCL2IE	RC2IE	TX2IE	TMR4IE	CTMUIE	TMR3GIE	RTCCIE	72
IPR3	SSP2IP	BCL2IP	RC2IP	TX2IP	TMR4IP	CTMUIP	TMR3GIP	RTCCIP	72
RCSTAx	SPEN	RX9	SREN	CREN	ADDEN	FERR	OERR	RX9D	72
TXREGx	EUSARTx Transmit Register								72
TXSTAx	CSRC	TX9	TXEN	SYNC	SENDB	BRGH	TRMT	TX9D	72
BAUDCONx	ABDOVF	RCIDL	RXDTP	TXCKP	BRG16	—	WUE	ABDEN	73
SPBRGHx	EUSARTx Baud Rate Generator Register High Byte								72
SPBRGx	EUSARTx Baud Rate Generator Register Low Byte								72
ODCON2	—	—	—	—	—	—	U2OD	U1OD	74

Legend: — = unimplemented, read as '0'. Shaded cells are not used for synchronous master transmission.

Note 1: These pins are only available on 44-pin devices.

© 2011 Microchip Technology Inc.

20.3.2 EUSART SYNCHRONOUS MASTER RECEPTION

Once Synchronous mode is selected, reception is enabled by setting either the Single Receive Enable bit, SREN (RCSTAx<5>) or the Continuous Receive Enable bit, CREN (RCSTAx<4>). Data is sampled on the RXx pin on the falling edge of the clock.

If enable bit, SREN, is set, only a single word is received. If enable bit, CREN, is set, the reception is continuous until CREN is cleared. If both bits are set, then CREN takes precedence.

To set up a Synchronous Master Reception:

1. Initialize the SPBRGHx:SPBRGx registers for the appropriate baud rate. Set or clear the BRG16 bit, as required, to achieve the desired baud rate.
2. Enable the synchronous master serial port by setting bits, SYNC, SPEN and CSRC.
3. Ensure bits, CREN and SREN, are clear.
4. If interrupts are desired, set enable bit, RCxIE.
5. If 9-bit reception is desired, set bit, RX9.
6. If a single reception is required, set bit, SREN. For continuous reception, set bit, CREN.
7. Interrupt flag bit, RCxIF, will be set when reception is complete and an interrupt will be generated if the enable bit, RCxIE, was set.
8. Read the RCSTAx register to get the ninth bit (if enabled) and determine if any error occurred during reception.
9. Read the 8-bit received data by reading the RCREGx register.
10. If any error occurred, clear the error by clearing bit, CREN.
11. If using interrupts, ensure that the GIE and PEIE bits in the INTCON register (INTCON<7:6>) are set.

FIGURE 20-13: SYNCHRONOUS RECEPTION (MASTER MODE, SREN)

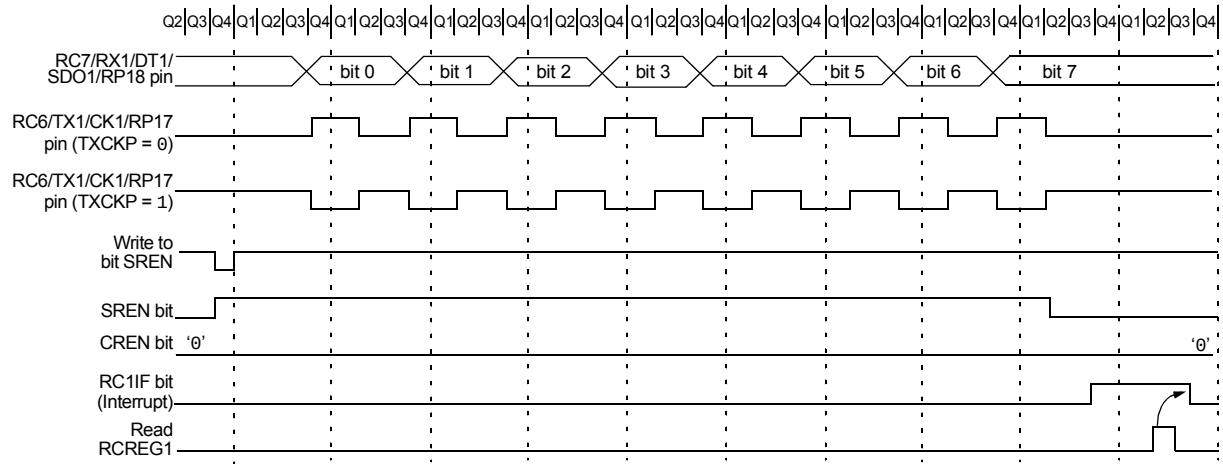

Note: Timing diagram demonstrates Sync Master mode with bit, SREN = 1, and bit, BRGH = 0. This example is equally applicable to EUSART2 (RPn1/TX2/CK2 and RPn2/RX2/DT2).

TABLE 20-8: REGISTERS ASSOCIATED WITH SYNCHRONOUS MASTER RECEPTION

Name	Bit 7	Bit 6	Bit 5	Bit 4	Bit 3	Bit 2	Bit 1	Bit 0	Reset Values on Page:
INTCON	GIE/GIEH	PEIE/GIEL	TMR0IE	INT0IE	RBIE	TMR0IF	INT0IF	RBIF	69
PIR1	PMPIF(1)	ADIF	RC1IF	TX1IF	SSP1IF	CCP1IF	TMR2IF	TMR1IF	72
PIE1	PMPIE(1)	ADIE	RC1IE	TX1IE	SSP1IE	CCP1IE	TMR2IE	TMR1IE	72
IPR1	PMPIP(1)	ADIP	RC1IP	TX1IP	SSP1IP	CCP1IP	TMR2IP	TMR1IP	72
PIR3	SSP2IF	BCL2IF	RC2IF	TX2IF	TMR4IF	CTMUIF	TMR3GIF	RTCCIF	72
PIE3	SSP2IE	BCL2IE	RC2IE	TX2IE	TMR4IE	CTMUIE	TMR3GIE	RTCCIE	72
IPR3	SSP2IP	BCL2IP	RC2IP	TX2IP	TMR4IP	CTMUIP	TMR3GIP	RTCCIP	72
RCSTAx	SPEN	RX9	SREN	CREN	ADDEN	FERR	OERR	RX9D	72
RCREGx	EUSARTx Receive Register								72
TXSTAx	CSRC	TX9	TXEN	SYNC	SENDB	BRGH	TRMT	TX9D	72
BAUDCONx	ABDOVF	RCIDL	RXDTP	TXCKP	BRG16	—	WUE	ABDEN	73
SPBRGHx	EUSARTx Baud Rate Generator Register High Byte								72
SPBRGx	EUSARTx Baud Rate Generator Register Low Byte								72
ODCON2	—	—	—	—	—	—	U2OD	U1OD	74

Legend: — = unimplemented, read as '0'. Shaded cells are not used for synchronous master reception.

Note 1: These pins are only available on 44-pin devices.

© 2011 Microchip Technology Inc.

20.4 EUSART Synchronous Slave Mode

Synchronous Slave mode is entered by clearing bit, CSRC (TXSTAx<7>). This mode differs from the Synchronous Master mode in that the shift clock is supplied externally at the CKx pin (instead of being supplied internally in Master mode). This allows the device to transfer or receive data while in any low-power mode.

20.4.1 EUSART SYNCHRONOUS SLAVE TRANSMISSION

The operation of the Synchronous Master and Slave modes is identical, except in the case of Sleep mode.

If two words are written to the TXREGx and then the SLEEP instruction is executed, the following will occur:

a) The first word will immediately transfer to the TSR register and transmit.
b) The second word will remain in the TXREGx register.
c) Flag bit, TXxIF, will not be set.
d) When the first word has been shifted out of TSR, the TXREGx register will transfer the second word to the TSR and flag bit, TXxIF, will now be set.
e) If enable bit, TXxIE, is set, the interrupt will wake the chip from Sleep. If the global interrupt is enabled, the program will branch to the interrupt vector.

To set up a Synchronous Slave Transmission:

1. Enable the synchronous slave serial port by setting bits, SYNC and SPEN, and clearing bit, CSRC.
2. Clear bits, CREN and SREN.
3. If interrupts are desired, set enable bit, TXxIE.
4. If 9-bit transmission is desired, set bit, TX9.
5. Enable the transmission by setting enable bit, TXEN.
6. If 9-bit transmission is selected, the ninth bit should be loaded in bit, TX9D.
7. Start transmission by loading data to the TXREGx register.
8. If using interrupts, ensure that the GIE and PEIE bits in the INTCON register (INTCON<7:6>) are set.

TABLE 20-9: REGISTERS ASSOCIATED WITH SYNCHRONOUS SLAVE TRANSMISSION

Name	Bit 7	Bit 6	Bit 5	Bit 4	Bit 3	Bit 2	Bit 1	Bit 0	Reset Values on Page:
INTCON	GIE/GIEH	PEIE/GIEL	TMR0IE	INT0IE	RBIE	TMR0IF	INT0IF	RBIF	69
PIR1	PMPIF(1)	ADIF	RC1IF	TX1IF	SSP1IF	CCP1IF	TMR2IF	TMR1IF	72
PIE1	PMPIE(1)	ADIE	RC1IE	TX1IE	SSP1IE	CCP1IE	TMR2IE	TMR1IE	72
IPR1	PMPIP(1)	ADIP	RC1IP	TX1IP	SSP1IP	CCP1IP	TMR2IP	TMR1IP	72
PIR3	SSP2IF	BCL2IF	RC2IF	TX2IF	TMR4IF	CTMUIF	TMR3GIF	RTCCIF	72
PIE3	SSP2IE	BCL2IE	RC2IE	TX2IE	TMR4IE	CTMUIE	TMR3GIE	RTCCIE	72
IPR3	SSP2IP	BCL2IP	RC2IP	TX2IP	TMR4IP	CTMUIP	TMR3GIP	RTCCIP	72
RCSTAx	SPEN	RX9	SREN	CREN	ADDEN	FERR	OERR	RX9D	72
TXREGx	EUSARTx Transmit Register								72
TXSTAx	CSRC	TX9	TXEN	SYNC	SENDB	BRGH	TRMT	TX9D	72
BAUDCONx	ABDOVF	RCIDL	RXDTP	TXCKP	BRG16	—	WUE	ABDEN	73
SPBRGHx	EUSARTx Baud Rate Generator Register High Byte								72
SPBRGx	EUSARTx Baud Rate Generator Register Low Byte								72

Legend: — = unimplemented, read as '0'. Shaded cells are not used for synchronous slave transmission.

Note 1: These pins are only available on 44-pin devices.

20.4.2 EUSART SYNCHRONOUS SLAVE RECEPTION

The operation of the Synchronous Master and Slave modes is identical, except in the case of Sleep or any Idle mode, and bit, SREN, which is a “don’t care” in Slave mode.

If receive is enabled by setting the CREN bit, prior to entering Sleep or any Idle mode, then a word may be received while in this low-power mode. Once the word is received, the RSR register will transfer the data to the RCREGx register. If the RCxIE enable bit is set, the interrupt generated will wake the chip from the low-power mode. If the global interrupt is enabled, the program will branch to the interrupt vector.

To set up a Synchronous Slave Reception:

1. Enable the synchronous master serial port by setting bits, SYNC and SPEN, and clearing bit, CSRC.
2. If interrupts are desired, set enable bit, RCxIE.
3. If 9-bit reception is desired, set bit, RX9.
4. To enable reception, set enable bit, CREN.
5. Flag bit, RCxIF, will be set when reception is complete. An interrupt will be generated if enable bit, RCxIE, was set.
6. Read the RCSTAx register to get the ninth bit (if enabled) and determine if any error occurred during reception.
7. Read the 8-bit received data by reading the RCREGx register.
8. If any error occurred, clear the error by clearing bit, CREN.
9. If using interrupts, ensure that the GIE and PEIE bits in the INTCON register (INTCON<7:6>) are set.

TABLE 20-10: REGISTERS ASSOCIATED WITH SYNCHRONOUS SLAVE RECEPTION

Name	Bit 7	Bit 6	Bit 5	Bit 4	Bit 3	Bit 2	Bit 1	Bit 0	Reset Values on Page:
INTCON	GIE/GIEH	PEIE/GIEL	TMR0IE	INT0IE	RBIE	TMR0IF	INT0IF	RBIF	69
PIR1	PMPIF(1)	ADIF	RC1IF	TX1IF	SSP1IF	CCP1IF	TMR2IF	TMR1IF	72
PIE1	PMPIE(1)	ADIE	RC1IE	TX1IE	SSP1IE	CCP1IE	TMR2IE	TMR1IE	72
IPR1	PMPIP(1)	ADIP	RC1IP	TX1IP	SSP1IP	CCP1IP	TMR2IP	TMR1IP	72
PIR3	SSP2IF	BCL2IF	RC2IF	TX2IF	TMR4IF	CTMUIF	TMR3GIF	RTCCIF	72
PIE3	SSP2IE	BCL2IE	RC2IE	TX2IE	TMR4IE	CTMUIE	TMR3GIE	RTCCIE	72
IPR3	SSP2IP	BCL2IP	RC2IP	TX2IP	TMR4IP	CTMUIP	TMR3GIP	RTCCIP	72
RCSTAx	SPEN	RX9	SREN	CREN	ADDEN	FERR	OERR	RX9D	72
RCREGx	EUSARTx Receive Register								72
TXSTAx	CSRC	TX9	TXEN	SYNC	SENDB	BRGH	TRMT	TX9D	72
BAUDCONx	ABDOVF	RCIDL	RXDTP	TXCKP	BRG16	—	WUE	ABDEN	73
SPBRGHx	EUSARTx Baud Rate Generator Register High Byte								72
SPBRGx	EUSARTx Baud Rate Generator Register Low Byte								72

Legend: — = unimplemented, read as ‘0’. Shaded cells are not used for synchronous slave reception.

Note 1: These pins are only available on 44-pin devices.

© 2011 Microchip Technology Inc.

21.0 10-BIT ANALOG-TO-DIGITAL CONVERTER (A/D) MODULE

The Analog-to-Digital (A/D) Converter module has 10 inputs for the 28-pin devices and 13 for the 44-pin devices. Additionally, two internal channels are available for sampling the VDDCORE and VBG absolute reference voltage. This module allows conversion of an analog input signal to a corresponding 10-bit digital number.

The module has six registers:

- A/D Control Register 0 (ADCON0)
- A/D Control Register 1 (ADCON1)
- A/D Port Configuration Register 2 (ANCON0)
- A/D Port Configuration Register 1 (ANCON1)
- A/D Result Registers (ADRESH and ADRESL)

The ADCON0 register, in Register 21-1, controls the operation of the A/D module. The ADCON1 register, in Register 21-2, configures the A/D clock source, programmed acquisition time and justification.

The ANCON0 and ANCON1 registers, in Register 21-3 and Register 21-4, configure the functions of the port pins.

REGISTER 21-1: ADCON0: A/D CONTROL REGISTER 0 (ACCESS FC2h)

R/W-0	R/W-0	R/W-0	R/W-0	R/W-0	R/W-0	R/W-0	R/W-0
VCFG1	VCFG0	CHS3(2)	CHS2(2)	CHS1(2)	CHS0(2)	GO/$\overline{\text{DONE}}$(3)	ADON
bit 7							bit 0

Legend:			
R = Readable bit	W = Writable bit	U = Unimplemented bit, read as '0'	
-n = Value at POR	'1' = Bit is set	'0' = Bit is cleared	x = Bit is unknown

bit 7 **VCFG1:** Voltage Reference Configuration bit (VREF- source)
1 = VREF- (AN2)
0 = AVSS(4)

bit 6 **VCFG0:** Voltage Reference Configuration bit (VREF+ source)
1 = VREF+ (AN3)
0 = AVDD(4)

bit 5-2 **CHS<3:0>:** Analog Channel Select bits(2)
0000 = Channel 00 (AN0)
0001 = Channel 01 (AN1)
0010 = Channel 02 (AN2)
0011 = Channel 03 (AN3)
0100 = Channel 04 (AN4)
0101 = Channel 05 (AN5)(1)
0110 = Channel 06 (AN6)(1)
0111 = Channel 07 (AN7)(1)
1000 = Channel 08 (AN8)
1001 = Channel 09 (AN9)
1010 = Channel 10 (AN10)
1011 = Channel 11 (AN11)
1100 = Channel 12 (AN12)
1101 = (Reserved)
1110 = VDDCORE
1111 = VBG Absolute Reference (~1.2V)(3)

bit 1 **GO/$\overline{\text{DONE}}$:** A/D Conversion Status bit
When ADON = 1:
1 = A/D conversion in progress
0 = A/D Idle

Note 1: These channels are not implemented on 28-pin devices.
2: Performing a conversion on unimplemented channels will return random values.
3: For best accuracy, the band gap reference circuit should be enabled (ANCON1<7> = 1) at least 10 ms before performing a conversion on this channel.
4: On package types that have AVDD and AVSS pins, these pins should be externally connected to VDD and VSS levels at the circuit board level. Package types that do not have AVDD and AVSS pins, tie AVDD and AVSS to VDD and VSS internally.

REGISTER 21-1: ADCON0: A/D CONTROL REGISTER 0 (ACCESS FC2h)

bit 0 **ADON:** A/D On bit
1 = A/D Converter module is enabled
0 = A/D Converter module is disabled

Note 1: These channels are not implemented on 28-pin devices.
2: Performing a conversion on unimplemented channels will return random values.
3: For best accuracy, the band gap reference circuit should be enabled (ANCON1<7> = 1) at least 10 ms before performing a conversion on this channel.
4: On package types that have AVDD and AVSS pins, these pins should be externally connected to VDD and VSS levels at the circuit board level. Package types that do not have AVDD and AVSS pins, tie AVDD and AVSS to VDD and VSS internally.

REGISTER 21-2: ADCON1: A/D CONTROL REGISTER 1 (ACCESS FC1h)

R/W-0	R/W-0	R/W-0	R/W-0	R/W-0	R/W-0	R/W-0	R/W-0
ADFM	ADCAL	ACQT2	ACQT1	ACQT0	ADCS2	ADCS1	ADCS0
bit 7							bit 0

Legend:			
R = Readable bit	W = Writable bit	U = Unimplemented bit, read as '0'	
-n = Value at POR	'1' = Bit is set	'0' = Bit is cleared	x = Bit is unknown

bit 7 **ADFM:** A/D Result Format Select bit
1 = Right justified
0 = Left justified

bit 6 **ADCAL:** A/D Calibration bit
1 = Calibration is performed on next A/D conversion
0 = Normal A/D Converter operation

bit 5-3 **ACQT<2:0>:** A/D Acquisition Time Select bits
111 = 20 TAD
110 = 16 TAD
101 = 12 TAD
100 = 8 TAD
011 = 6 TAD
010 = 4 TAD
001 = 2 TAD
000 = 0 TAD

bit 2-0 **ADCS<2:0>:** A/D Conversion Clock Select bits
110 = FOSC/64
101 = FOSC/16
100 = FOSC/4
011 = FRC (clock derived from A/D RC oscillator)(1)
010 = FOSC/32
001 = FOSC/8
000 = FOSC/2

Note 1: If the A/D FRC clock source is selected, a delay of one TCY (instruction cycle) is added before the A/D clock starts. This allows the SLEEP instruction to be executed before starting a conversion.

© 2011 Microchip Technology Inc.

The ANCON0 and ANCON1 registers are used to configure the operation of the I/O pin associated with each analog channel. Setting any one of the PCFG bits configures the corresponding pin to operate as a digital only I/O. Clearing a bit configures the pin to operate as an analog input for either the A/D Converter or the comparator module; all digital peripherals are disabled and digital inputs read as '0'. As a rule, I/O pins that are multiplexed with analog inputs default to analog operation on device Resets.

In order to correctly perform A/D conversions on the VBG band gap reference (ADCON0<5:2> = 1111), the reference circuit must be powered on first. The VBGEN bit in the ANCON1 register allows the firmware to manually request that the band gap reference circuit should be enabled. For best accuracy, firmware should allow a settling time of at least 10 ms prior to performing the first acquisition on this channel after enabling the band gap reference.

The reference circuit may already have been turned on if some other hardware module (such as the on-chip voltage regulator, comparators or HLVD) has already requested it. In this case, the initial turn-on settling time may have already elapsed and firmware does not need to wait as long before measuring VBG. Once the acquisition is complete, firmware may clear the VBGEN bit, which will save a small amount of power if no other modules are still requesting the VBG reference.

REGISTER 21-3: ANCON0: A/D PORT CONFIGURATION REGISTER 2 (BANKED F48h)

R/W-0	R/W-0	R/W-0	R/W-0	R/W-0	R/W-0	R/W-0	R/W-0
PCFG7(1)	PCFG6(1)	PCFG5(1)	PCFG4	PCFG3	PCFG2	PCFG1	PCFG0
bit 7							bit 0

Legend:			
R = Readable bit	W = Writable bit	U = Unimplemented bit, read as '0'	
-n = Value at POR	'1' = Bit is set	'0' = Bit is cleared	x = Bit is unknown

bit 7-0 **PCFG<7:0>:** Analog Port Configuration bits (AN7-AN0)
1 = Pin configured as a digital port
0 = Pin configured as an analog channel – digital input is disabled and reads '0'

Note 1: These bits are only available on 44-pin devices.

REGISTER 21-4: ANCON1: A/D PORT CONFIGURATION REGISTER 1 (BANKED F49h)

R/W-0	U-0	U-0	R/W-0	R/W-0	R/W-0	R/W-0	R/W-0
VBGEN	r	—	PCFG12	PCFG11	PCFG10	PCFG9	PCFG8
bit 7							bit 0

Legend:	r = Reserved bit		
R = Readable bit	W = Writable bit	U = Unimplemented bit, read as '0'	
-n = Value at POR	'1' = Bit is set	'0' = Bit is cleared	x = Bit is unknown

bit 7 **VBGEN:** 1.2V Band Gap Reference Enable bit
1 = 1.2V band gap reference is powered on
0 = 1.2V band gap reference is turned off to save power (if no other modules are requesting it)

bit 6 **Reserved:** Always maintain as '0' for lowest power consumption

bit 5 **Unimplemented:** Read as '0'

bit 4-0 **PCFG<12:8>:** Analog Port Configuration bits (AN12-AN8)
1 = Pin configured as a digital port
0 = Pin configured as an analog channel – digital input is disabled and reads '0'

The analog reference voltage is software-selectable to either the device's positive and negative supply voltage (AVDD and AVSS), or the voltage level on the RA3/AN3/VREF+/C1INB and RA2/AN2/VREF-/CVREF/C2INB pins.

The A/D Converter has a unique feature of being able to operate while the device is in Sleep mode. To operate in Sleep, the A/D conversion clock must be derived from the A/D's internal RC oscillator.

The output of the sample and hold is the input into the converter, which generates the result via Successive Approximation (SAR).

Each port pin associated with the A/D Converter can be configured as an analog input or as a digital I/O. The ADRESH and ADRESL registers contain the result of the A/D conversion. When the A/D conversion is complete, the result is loaded into the ADRESH:ADRESL register pair, the GO/$\overline{\text{DONE}}$ bit (ADCON0<1>) is cleared and the A/D Interrupt Flag bit, ADIF, is set.

A device Reset forces all registers to their Reset state. This forces the A/D module to be turned off and any conversion in progress is aborted. The value in the ADRESH:ADRESL register pair is not modified for a Power-on Reset (POR). These registers will contain unknown data after a POR.

Figure 21-1 provides the block diagram of the A/D module.

FIGURE 21-1: A/D BLOCK DIAGRAM

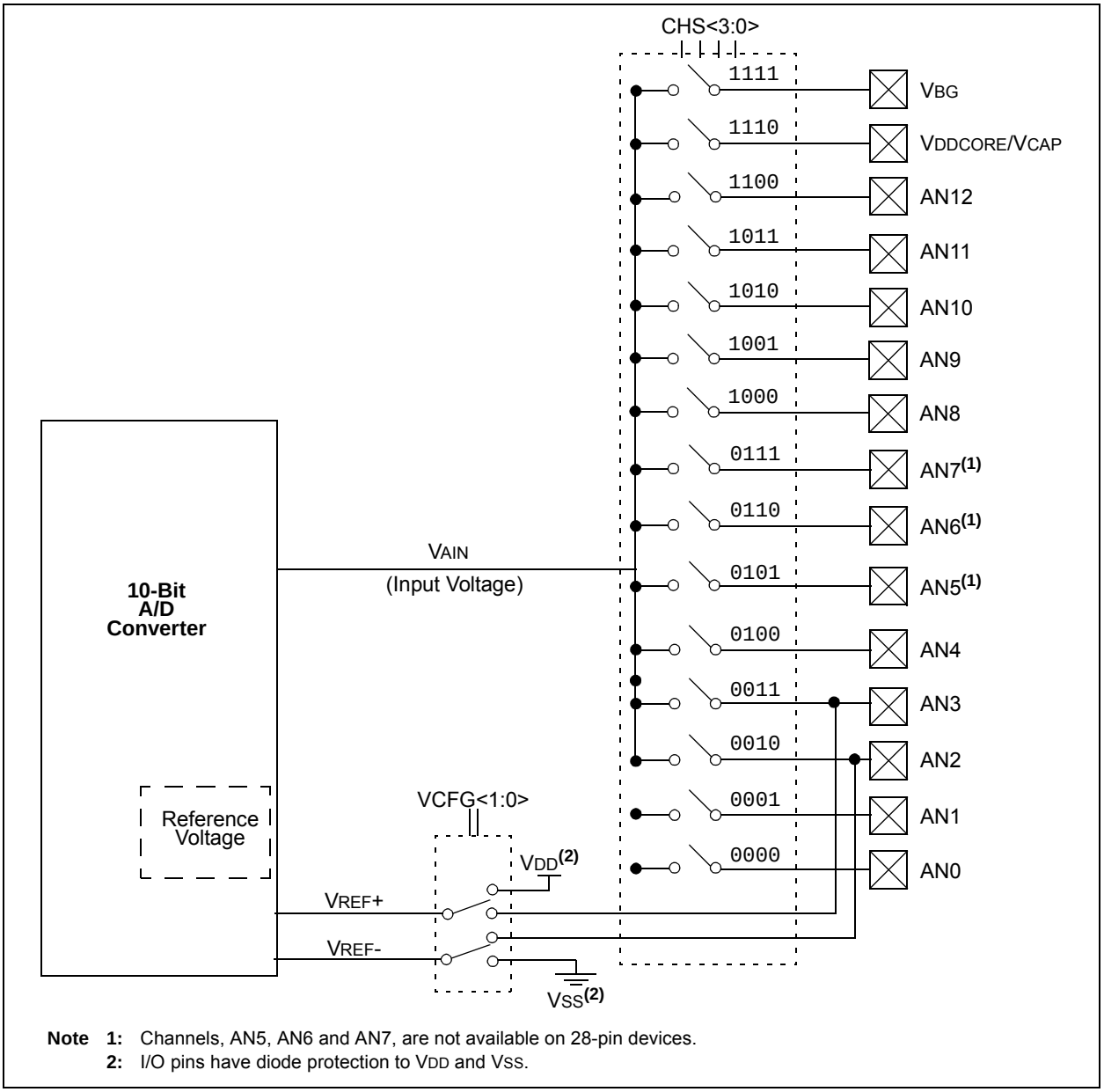

Note 1: Channels, AN5, AN6 and AN7, are not available on 28-pin devices.
2: I/O pins have diode protection to VDD and VSS.

© 2011 Microchip Technology Inc.

After the A/D module has been configured as desired, the selected channel must be acquired before the conversion is started. The analog input channels must have their corresponding TRIS bits selected as an input. To determine acquisition time, see **Section 21.1 "A/D Acquisition Requirements"**. After this acquisition time has elapsed, the A/D conversion can be started. An acquisition time can be programmed to occur between setting the GO/$\overline{\text{DONE}}$ bit and the actual start of the conversion.

The following steps should be followed to do an A/D conversion:

1. Configure the A/D module:
   - Configure the required ADC pins as analog pins using ANCON0, ANCON1
   - Set voltage reference using ADCON0
   - Select A/D input channel (ADCON0)
   - Select A/D acquisition time (ADCON1)
   - Select A/D conversion clock (ADCON1)
   - Turn on A/D module (ADCON0)
2. Configure the A/D interrupt (if desired):
   - Clear ADIF bit
   - Set ADIE bit
   - Set GIE bit
3. Wait the required acquisition time (if required).
4. Start conversion:
   - Set GO/$\overline{\text{DONE}}$ bit (ADCON0<1>)
5. Wait for the A/D conversion to complete, by either:
   - Polling for the GO/$\overline{\text{DONE}}$ bit to be cleared

   OR
   - Waiting for the A/D interrupt
6. Read A/D Result registers (ADRESH:ADRESL); clear bit, ADIF, if required.
7. For next conversion, go to Step 1 or Step 2, as required. The A/D conversion time per bit is defined as TAD. A minimum Wait of 2 TAD is required before the next acquisition starts.

FIGURE 21-2: ANALOG INPUT MODEL

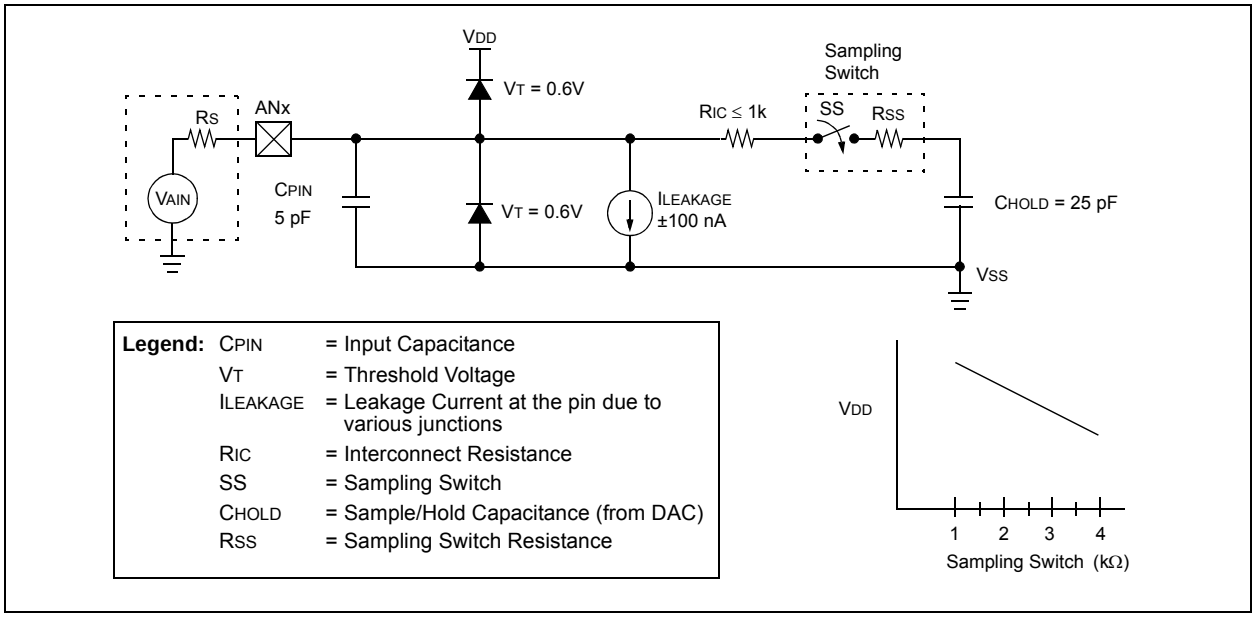

21.1 A/D Acquisition Requirements

For the A/D Converter to meet its specified accuracy, the charge holding capacitor (CHOLD) must be allowed to fully charge to the input channel voltage level. The analog input model is illustrated in Figure 21-2. The source impedance (RS) and the internal sampling switch (RSS) impedance directly affect the time required to charge the capacitor CHOLD. The sampling switch (RSS) impedance varies over the device voltage (VDD). The source impedance affects the offset voltage at the analog input (due to pin leakage current). **The maximum recommended impedance for analog sources is 2.5 kΩ.** After the analog input channel is selected (changed), the channel must be sampled for at least the minimum acquisition time before starting a conversion.

Note:	When the conversion is started, the holding capacitor is disconnected from the input pin.

To calculate the minimum acquisition time, Equation 21-1 may be used. This equation assumes that 1/2 LSb error is used (1024 steps for the A/D). The 1/2 LSb error is the maximum error allowed for the A/D to meet its specified resolution.

Equation 21-3 provides the calculation of the minimum required acquisition time, TACQ. This calculation is based on the following application system assumptions:

CHOLD	=	25 pF
Rs	=	2.5 kΩ
Conversion Error	≤	1/2 LSb
VDD	=	3V → Rss = 2 kΩ
Temperature	=	85°C (system max.)

EQUATION 21-1: ACQUISITION TIME

$$T_{ACQ} = \text{Amplifier Settling Time} + \text{Holding Capacitor Charging Time} + \text{Temperature Coefficient}$$
$$= T_{AMP} + T_C + T_{COFF}$$

EQUATION 21-2: A/D MINIMUM CHARGING TIME

$$V_{HOLD} = (V_{REF} - (V_{REF}/2048)) \bullet (1 - e^{(-T_C/C_{HOLD}(R_{IC} + R_{SS} + R_S))})$$
or
$$T_C = -(C_{HOLD})(R_{IC} + R_{SS} + R_S)\ln(1/2048)$$

EQUATION 21-3: CALCULATING THE MINIMUM REQUIRED ACQUISITION TIME

$$T_{ACQ} = T_{AMP} + T_C + T_{COFF}$$
$$T_{AMP} = 0.2\ \mu s$$
$$T_{COFF} = (\text{Temp} - 25°C)(0.02\ \mu s/°C)$$
$$(85°C - 25°C)(0.02\ \mu s/°C)$$
$$1.2\ \mu s$$

Temperature coefficient is only required for temperatures > 25°C. Below 25°C, $T_{COFF} = 0\ \mu s$.

$$T_C = -(C_{HOLD})(R_{IC} + R_{SS} + R_S)\ln(1/2048)\ \mu s$$
$$-(25\ pF)\ (1\ k\Omega + 2\ k\Omega + 2.5\ k\Omega)\ \ln(0.0004883)\ \mu s$$
$$1.05\ \mu s$$
$$T_{ACQ} = 0.2\ \mu s + 1.05\ \mu s + 1.2\ \mu s$$
$$2.45\ \mu s$$

© 2011 Microchip Technology Inc.

21.2 Selecting and Configuring Automatic Acquisition Time

The ADCON1 register allows the user to select an acquisition time that occurs each time the GO/DONE bit is set.

When the GO/DONE bit is set, sampling is stopped and a conversion begins. The user is responsible for ensuring the required acquisition time has passed between selecting the desired input channel and setting the GO/DONE bit. This occurs when the ACQT<2:0> bits (ADCON1<5:3>) remain in their Reset state ('000') and is compatible with devices that do not offer programmable acquisition times.

If desired, the ACQT bits can be set to select a programmable acquisition time for the A/D module. When the GO/DONE bit is set, the A/D module continues to sample the input for the selected acquisition time, then automatically begins a conversion. Since the acquisition time is programmed, there may be no need to wait for an acquisition time between selecting a channel and setting the GO/DONE bit.

In either case, when the conversion is completed, the GO/DONE bit is cleared, the ADIF flag is set and the A/D begins sampling the currently selected channel again. If an acquisition time is programmed, there is nothing to indicate if the acquisition time has ended or if the conversion has begun.

21.3 Selecting the A/D Conversion Clock

The A/D conversion time per bit is defined as TAD. The A/D conversion requires 11 TAD per 10-bit conversion. The source of the A/D conversion clock is software-selectable.

There are seven possible options for TAD:

- 2 TOSC
- 4 TOSC
- 8 TOSC
- 16 TOSC
- 32 TOSC
- 64 TOSC
- Internal RC Oscillator

For correct A/D conversions, the A/D conversion clock (TAD) must be as short as possible but greater than the minimum TAD (see Parameter 130 in Table 30-32 for more information).

Table 21-1 provides the resultant TAD times derived from the device operating frequencies and the A/D clock source selected.

TABLE 21-1: TAD vs. DEVICE OPERATING FREQUENCIES

AD Clock Source (TAD)		Maximum Device Frequency
Operation	ADCS<2:0>	
2 TOSC	000	2.86 MHz
4 TOSC	100	5.71 MHz
8 TOSC	001	11.43 MHz
16 TOSC	101	22.86 MHz
32 TOSC	010	45.71 MHz
64 TOSC	110	48.0 MHz
RC(2)	011	1.00 MHz(1)

Note 1: The RC source has a typical TAD time of 4 μs.

2: For device frequencies above 1 MHz, the device must be in Sleep mode for the entire conversion or the A/D accuracy may be out of specification.

21.4 Configuring Analog Port Pins

The ANCON0, ANCON1 and TRISA registers control the operation of the A/D port pins. The port pins needed as analog inputs must have their corresponding TRIS bits set (input). If the TRIS bit is cleared (output), the digital output level (VOH or VOL) will be converted.

The A/D operation is independent of the state of the CHS<3:0> bits and the TRIS bits.

Note 1: When reading the PORT register, all pins configured as analog input channels will read as cleared (a low level). Pins configured as digital inputs will convert an analog input. Analog levels on a digitally configured input will be accurately converted.

2: Analog levels on any pin defined as a digital input may cause the digital input buffer to consume current out of the device's specification limits.

21.5 A/D Conversions

Figure 21-3 displays the operation of the A/D Converter after the GO/$\overline{\text{DONE}}$ bit has been set and the ACQT<2:0> bits are cleared. A conversion is started after the following instruction to allow entry into Sleep mode before the conversion begins.

Figure 21-4 displays the operation of the A/D Converter after the GO/$\overline{\text{DONE}}$ bit has been set, the ACQT<2:0> bits are set to '010' and selecting a 4 TAD acquisition time before the conversion starts.

Clearing the GO/$\overline{\text{DONE}}$ bit during a conversion will abort the current conversion. The A/D Result register pair will NOT be updated with the partially completed A/D conversion sample. This means the ADRESH:ADRESL registers will continue to contain the value of the last completed conversion (or the last value written to the ADRESH:ADRESL registers).

After the A/D conversion is completed or aborted, a 2 TAD Wait is required before the next acquisition can be started. After this Wait, acquisition on the selected channel is automatically started.

Note: The GO/$\overline{\text{DONE}}$ bit should **NOT** be set in the same instruction that turns on the A/D.

21.6 Use of the ECCP2 Trigger

An A/D conversion can be started by the Special Event Trigger of the ECCP2 module. This requires that the CCP2M<3:0> bits (CCP2CON<3:0>) be programmed as '1011' and that the A/D module is enabled (ADON bit is set). When the trigger occurs, the GO/$\overline{\text{DONE}}$ bit will be set, starting the A/D acquisition and conversion, and the Timer1 (or Timer3) counter will be reset to zero. Timer1 (or Timer3) is reset to automatically repeat the A/D acquisition period with minimal software overhead (moving ADRESH/ADRESL to the desired location). The appropriate analog input channel must be selected and the minimum acquisition period is either timed by the user, or an appropriate TACQ time is selected before the Special Event Trigger sets the GO/$\overline{\text{DONE}}$ bit (starts a conversion).

If the A/D module is not enabled (ADON is cleared), the Special Event Trigger will be ignored by the A/D module but will still reset the Timer1 (or Timer3) counter.

FIGURE 21-3: A/D CONVERSION TAD CYCLES (ACQT<2:0> = 000, TACQ = 0)

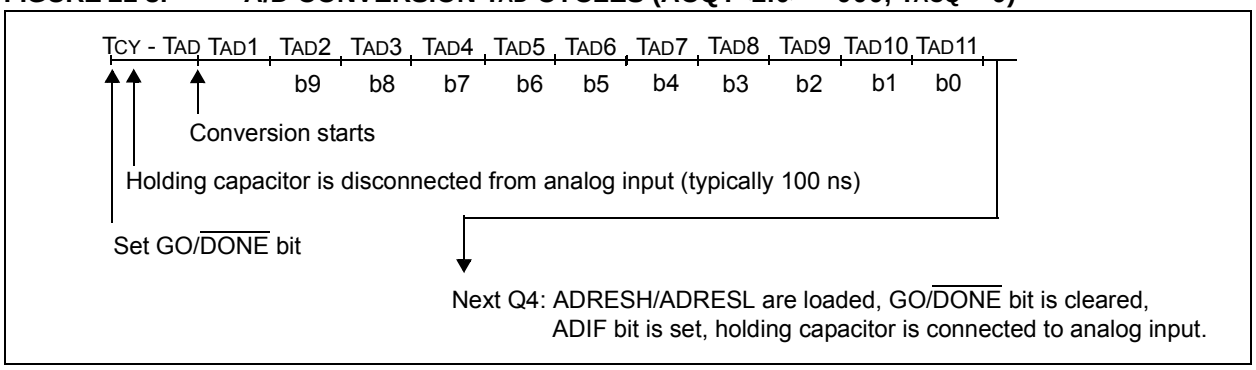

FIGURE 21-4: A/D CONVERSION TAD CYCLES (ACQT<2:0> = 010, TACQ = 4 TAD)

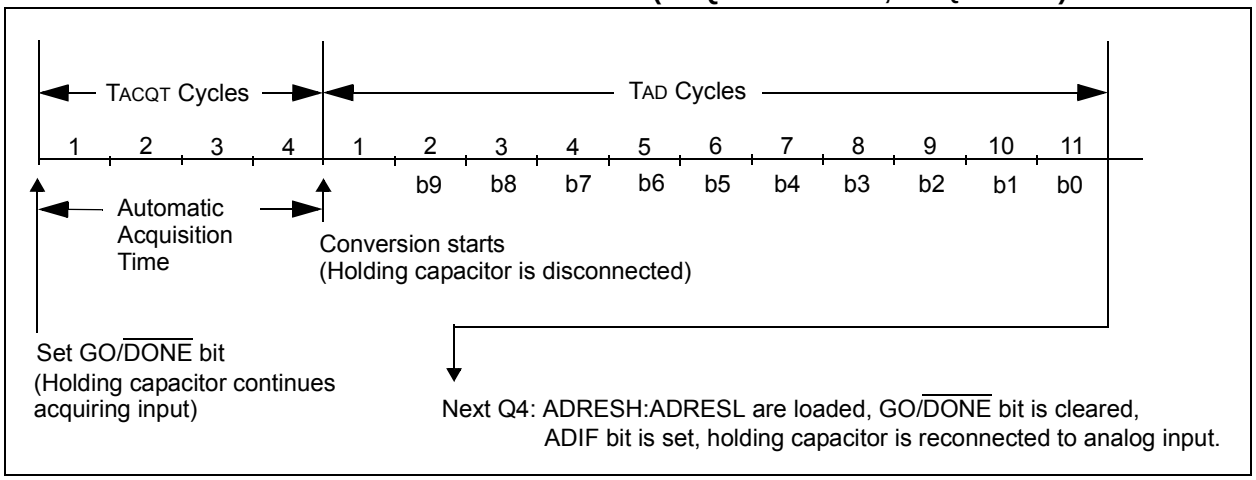

© 2011 Microchip Technology Inc.

21.7 A/D Converter Calibration

The A/D Converter in the PIC18F46J50 family of devices includes a self-calibration feature, which compensates for any offset generated within the module. The calibration process is automated and is initiated by setting the ADCAL bit (ADCON1<6>). The next time the GO/DONE bit is set, the module will perform a "dummy" conversion (that is, with reading none of the input channels) and store the resulting value internally to compensate for the offset. Thus, subsequent offsets will be compensated.

Example 21-1 provides an example of a calibration routine.

The calibration process assumes that the device is in a relatively steady-state operating condition. If A/D calibration is used, it should be performed after each device Reset or if there are other major changes in operating conditions.

21.8 Operation in Power-Managed Modes

The selection of the automatic acquisition time and A/D conversion clock is determined, in part, by the clock source and frequency while in a power-managed mode.

If the A/D is expected to operate while the device is in a power-managed mode, the ACQT<2:0> and ADCS<2:0> bits in ADCON1 should be updated in accordance with the power-managed mode clock that will be used. After the power-managed mode is entered (either of the power-managed Run modes), an A/D acquisition or conversion may be started. Once an acquisition or conversion is started, the device should continue to be clocked by the same power-managed mode clock source until the conversion has been completed. If desired, the device may be placed into the corresponding power-managed Idle mode during the conversion.

If the power-managed mode clock frequency is less than 1 MHz, the A/D RC clock source should be selected.

Operation in Sleep mode requires the A/D RC clock to be selected. If bits, ACQT<2:0>, are set to '000' and a conversion is started, the conversion will be delayed one instruction cycle to allow execution of the SLEEP instruction and entry to Sleep mode. The IDLEN and SCS bits in the OSCCON register must have already been cleared prior to starting the conversion.

EXAMPLE 21-1: SAMPLE A/D CALIBRATION ROUTINE

```
        BCF     ANCON0,PCFG0        ;Make Channel 0 analog
        BSF     ADCON0,ADON         ;Enable A/D module
        BSF     ADCON1,ADCAL        ;Enable Calibration
        BSF     ADCON0,GO           ;Start a dummy A/D conversion
CALIBRATION                         ;
        BTFSC   ADCON0,GO           ;Wait for the dummy conversion to finish
        BRA     CALIBRATION         ;
        BCF     ADCON1,ADCAL        ;Calibration done, turn off calibration enable
                                    ;Proceed with the actual A/D conversion
```

TABLE 21-2: SUMMARY OF A/D REGISTERS

Name	Bit 7	Bit 6	Bit 5	Bit 4	Bit 3	Bit 2	Bit 1	Bit 0	Reset Values on Page:
INTCON	GIE/GIEH	PEIE/GIEL	TMR0IE	INT0IE	RBIE	TMR0IF	INT0IF	RBIF	69
PIR1	PMPIF(1)	ADIF	RC1IF	TX1IF	SSP1IF	CCP1IF	TMR2IF	TMR1IF	72
PIE1	PMPIE(1)	ADIE	RC1IE	TX1IE	SSP1IE	CCP1IE	TMR2IE	TMR1IE	72
IPR1	PMPIP(1)	ADIP	RC1IP	TX1IP	SSP1IP	CCP1IP	TMR2IP	TMR1IP	72
PIR2	OSCFIF	CM2IF	CM1IF	USBIF	BCL1IF	HLVDIF	TMR3IF	CCP2IF	72
PIE2	OSCFIE	CM2IE	CM1IE	USBIE	BCL1IE	HLVDIE	TMR3IE	CCP2IE	72
IPR2	OSCFIP	CM2IP	CM1IP	USBIP	BCL1IP	HLVDIP	TMR3IP	CCP2IP	72
ADRESH	A/D Result Register High Byte								70
ADRESL	A/D Result Register Low Byte								70
ADCON0	VCFG1	VCFG0	CHS3	CHS3	CHS1	CHS0	GO/$\overline{\text{DONE}}$	ADON	70
ANCON0	PCFG7(1)	PCFG6(1)	PCFG5(1)	PCFG4	PCFG3	PCFG2	PCFG1	PCFG0	74
ADCON1	ADFM	ADCAL	ACQT2	ACQT1	ACQT0	ADCS2	ADCS1	ADCS0	70
ANCON1	VBGEN	r	—	PCFG12	PCFG11	PCFG10	PCFG9	PCFG8	74
CCP2CON	P2M1	P2M0	DC2B1	DC2B0	CCP2M3	CCP2M2	CCP2M1	CCP2M0	71
PORTA	RA7	RA6	RA5	—	RA3	RA2	RA1	RA0	72
TRISA	TRISA7	TRISA6	TRISA5	—	TRISA3	TRISA2	TRISA1	TRISA0	72

Legend: — = unimplemented, read as '0', r = reserved. Shaded cells are not used for A/D conversion.

Note 1: These bits are only available on 44-pin devices.

© 2011 Microchip Technology Inc.

22.0 UNIVERSAL SERIAL BUS (USB)

This section describes the details of the USB peripheral. Because of the very specific nature of the module, knowledge of USB is expected. Some high-level USB information is provided in **Section 22.9 "Overview of USB"** only for application design reference. Designers are encouraged to refer to the official specification published by the USB Implementers Forum (USB-IF) for the latest information. *"USB Specification Revision 2.0"* is the most current specification at the time of publication of this document.

22.1 Overview of the USB Peripheral

PIC18F46J50 family devices contain a full-speed and low-speed, compatible USB Serial Interface Engine (SIE) that allows fast communication between any USB host and the PIC® MCU. The SIE can be interfaced directly to the USB, utilizing the internal transceiver.

Some special hardware features have been included to improve performance. Dual access port memory in the device's data memory space (USB RAM) has been supplied to share direct memory access between the microcontroller core and the SIE. Buffer descriptors are also provided, allowing users to freely program end-point memory usage within the USB RAM space. Figure 22-1 provides a general overview of the USB peripheral and its features.

FIGURE 22-1: USB PERIPHERAL AND OPTIONS

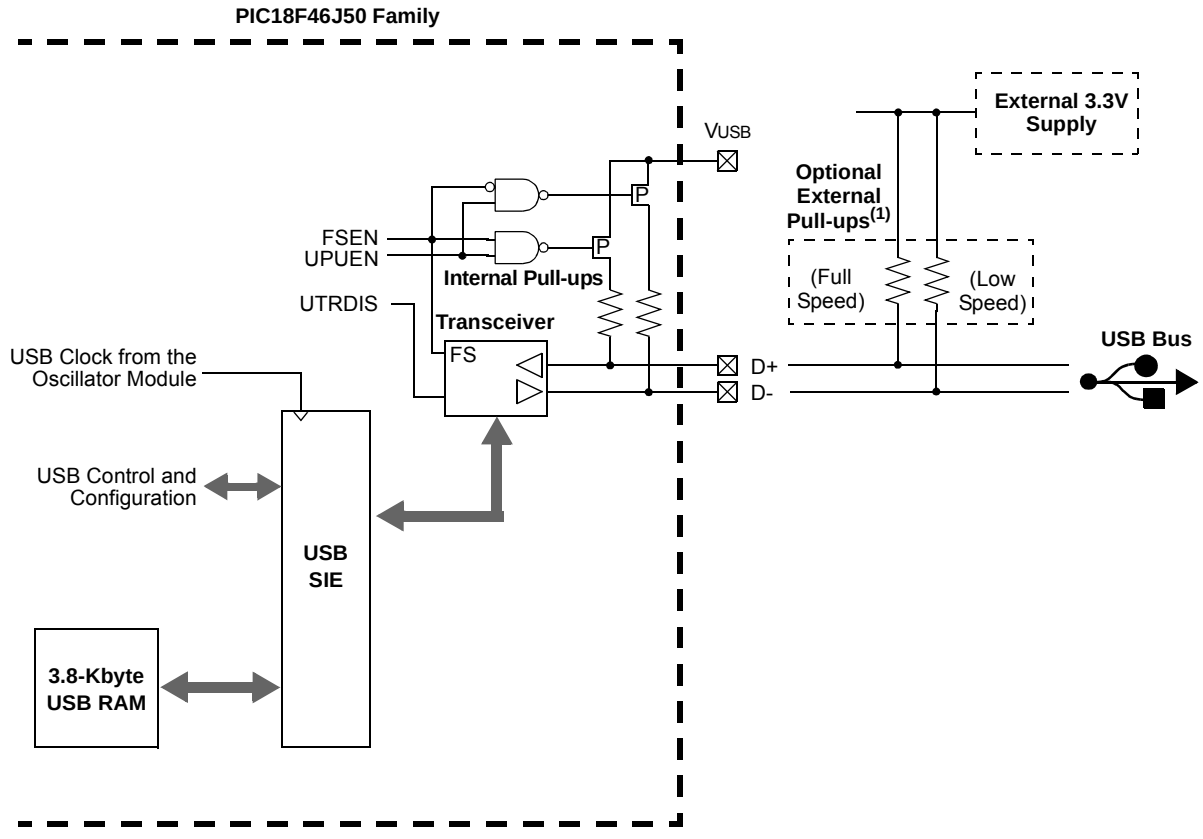

Note 1: The internal pull-up resistors should be disabled (UPUEN = 0) if external pull-up resistors are used.

22.2 USB Status and Control

The operation of the USB module is configured and managed through three control registers. In addition, a total of 22 registers are used to manage the actual USB transactions. The registers are:

- USB Control register (UCON)
- USB Configuration register (UCFG)
- USB Transfer Status register (USTAT)
- USB Device Address register (UADDR)
- Frame Number registers (UFRMH:UFRML)
- Endpoint Enable registers 0 through 15 (UEPn)

22.2.1 USB CONTROL REGISTER (UCON)

The USB Control register (Register 22-1) contains the bits needed to control the module behavior during transfers. The register contains bits that control the following:

- Main USB Peripheral Enable
- Ping-Pong Buffer Pointer Reset
- Control of the Suspend mode
- Packet Transfer Disable

In addition, the USB Control register contains a status bit, SE0 (UCON<5>), which is used to indicate the occurrence of a single-ended zero on the bus. When the USB module is enabled, this bit should be monitored to determine whether the differential data lines have come out of a single-ended zero condition. This helps to differentiate the initial power-up state from the USB Reset signal.

The overall operation of the USB module is controlled by the USBEN bit (UCON<3>). Setting this bit activates the module and resets all of the PPBI bits in the Buffer Descriptor Table (BDT) to '0'. This bit also activates the internal pull-up resistors, if they are enabled. Thus, this bit can be used as a soft attach/detach to the USB. Although all status and control bits are ignored when this bit is clear, the module needs to be fully preconfigured prior to setting this bit. The USB clock source should have been already configured for the correct frequency and running. If the PLL is being used, it should be enabled at least 2 ms (enough time for the PLL to lock) before attempting to set the USBEN bit.

Note:	When disabling the USB module, make sure the SUSPND bit (UCON<1>) is clear prior to clearing the USBEN bit. Clearing the USBEN bit when the module is in the suspended state may prevent the module from fully powering down

© 2011 Microchip Technology Inc.

REGISTER 22-1: UCON: USB CONTROL REGISTER (ACCESS F65h)

U-0	R/W-0	R-x	R/C-0	R/W-0	R/W-0	R/W-0	U-0
—	PPBRST	SE0	PKTDIS	USBEN(1)	RESUME	SUSPND	—
bit 7							bit 0

Legend:	C = Clearable bit		
R = Readable bit	W = Writable bit	U = Unimplemented bit, read as '0'	
-n = Value at POR	'1' = Bit is set	'0' = Bit is cleared	x = Bit is unknown

bit 7 **Unimplemented:** Read as '0'

bit 6 **PPBRST:** Ping-Pong Buffers Reset bit
1 = Reset all Ping-Pong Buffer Pointers to the Even Buffer Descriptor (BD) banks
0 = Ping-Pong Buffer Pointers are not being reset

bit 5 **SE0:** Live Single-Ended Zero Flag bit
1 = Single-ended zero is active on the USB bus
0 = No single-ended zero is detected

bit 4 **PKTDIS:** Packet Transfer Disable bit
1 = SIE token and packet processing are disabled, automatically set when a SETUP token is received
0 = SIE token and packet processing are enabled

bit 3 **USBEN:** USB Module Enable bit(1)
1 = USB module and supporting circuitry are enabled (device attached)
0 = USB module and supporting circuitry are disabled (device detached)

bit 2 **RESUME:** Resume Signaling Enable bit
1 = Resume signaling is activated
0 = Resume signaling is disabled

bit 1 **SUSPND:** Suspend USB bit
1 = USB module and supporting circuitry are in Power Conserve mode, SIE clock is inactive
0 = USB module and supporting circuitry are in normal operation, SIE is clocked at the configured rate

bit 0 **Unimplemented**: Read as '0'

Note 1: Make sure the USB clock source is correctly configured before setting this bit.

The PPBRST bit (UCON<6>) controls the Reset status when Double-Buffering mode (ping-pong buffering) is used. When the PPBRST bit is set, all Ping-Pong Buffer Pointers are set to the Even buffers. PPBRST has to be cleared by firmware. This bit is ignored in buffering modes not using ping-pong buffering.

The PKTDIS bit (UCON<4>) is a flag indicating that the SIE has disabled packet transmission and reception. This bit is set by the SIE when a SETUP token is received to allow setup processing. This bit cannot be set by the microcontroller, only cleared; clearing it allows the SIE to continue transmission and/or reception. Any pending events within the Buffer Descriptor Table will still be available, indicated within the USTAT register's FIFO buffer.

The RESUME bit (UCON<2>) allows the peripheral to perform a remote wake-up by executing resume signaling. To generate a valid remote wake-up, firmware must set RESUME for 10 ms and then clear the bit. For more information on resume signaling, see **Sections 7.1.7.5, 11.4.4** and **11.9** in the *"USB 2.0 Specification"*.

The SUSPND bit (UCON<1>) places the module and supporting circuitry in a low-power mode. The input clock to the SIE is also disabled. This bit should be set by the software in response to an IDLEIF interrupt. It should be reset by the microcontroller firmware after an ACTVIF interrupt is observed. When this bit is active, the device remains attached to the bus, but the transceiver outputs remain Idle. The voltage on the VUSB pin may vary depending on the value of this bit. Setting this bit, before a IDLEIF request, will result in unpredictable bus behavior.

Note:	While in Suspend mode, a typical bus-powered USB device is limited to 2.5 mA of average current. This is the complete current which may be drawn by the PIC device and its supporting circuitry. Care should be taken to assure minimum current draw when the device enters Suspend mode.

22.2.2 USB CONFIGURATION REGISTER (UCFG)

Prior to communicating over USB, the module's associated internal and/or external hardware must be configured. Most of the configuration is performed with the UCFG register (Register 22-2).The UFCG register contains most of the bits that control the system level behavior of the USB module. These include:

- Bus Speed (full speed versus low speed)
- On-Chip Pull-up Resistor Enable
- On-Chip Transceiver Enable
- Ping-Pong Buffer Usage

The UCFG register also contains two bits which aid in module testing, debugging and USB certifications. These bits control output enable state monitoring and eye pattern generation.

Note:	The USB speed, transceiver and pull-up should only be configured during the module setup phase. It is not recommended to switch these settings while the module is enabled.

22.2.2.1 Internal Transceiver

The USB peripheral has a built-in, USB 2.0, full-speed and low-speed capable transceiver, internally connected to the SIE. This feature is useful for low-cost, single chip applications. The UTRDIS bit (UCFG<3>) controls the transceiver; it is enabled by default (UTRDIS = 0). The FSEN bit (UCFG<2>) controls the transceiver speed; setting the bit enables full-speed operation.

The on-chip USB pull-up resistors are controlled by the UPUEN bit (UCFG<4>). They can only be selected when the on-chip transceiver is enabled.

The internal USB transceiver obtains power from the VUSB pin. In order to meet USB signalling level specifications, VUSB must be supplied with a voltage source between 3.0V and 3.6V. The best electrical signal quality is obtained when a 3.3V supply is used and locally bypassed with a high-quality ceramic capacitor (ex: 0.1 μF). The capacitor should be placed as close as possible to the VUSB and VSS pins.

VUSB should always be maintained ≥ VDD. If the USB module is not used, but RC4 or RC5 are used as general purpose inputs, VUSB should still be connected to a power source (such as VDD). The input thresholds for the RC4 and RC5 pins are dependent upon the VUSB supply level.

The D+ and D- signal lines can be routed directly to their respective pins on the USB connector or cable (for hard-wired applications). No additional resistors, capacitors or magnetic components are required as the D+ and D- drivers have controlled slew rate and output impedance, intended to match with the characteristic impedance of the USB cable.

In order to achieve optimum USB signal quality, the D+ and D- traces between the microcontroller and USB connector (or cable) should be less than 19 cm long. Both traces should be equal in length and they should be routed parallel to each other. Ideally, these traces should be designed to have a characteristic impedance matching that of the USB cable.

© 2011 Microchip Technology Inc.

REGISTER 22-2: UCFG: USB CONFIGURATION REGISTER (BANKED F39h)

R/W-0	R/W-0	U-0	R/W-0	R/W-0	R/W-0	R/W-0	R/W-0
UTEYE	UOEMON	—	UPUEN(1,2)	UTRDIS(1,3)	FSEN(1)	PPB1	PPB0
bit 7							bit 0

Legend:			
R = Readable bit	W = Writable bit	U = Unimplemented bit, read as '0'	
-n = Value at POR	'1' = Bit is set	'0' = Bit is cleared	x = Bit is unknown

bit 7 **UTEYE:** USB Eye Pattern Test Enable bit
1 = Eye pattern test is enabled
0 = Eye pattern test is disabled

bit 6 **UOEMON:** USB OE Monitor Enable bit
1 = $\overline{\text{UOE}}$ signal is active, indicating intervals during which the D+/D- lines are driving
0 = $\overline{\text{UOE}}$ signal is inactive

bit 5 **Unimplemented:** Read as '0'

bit 4 **UPUEN:** USB On-Chip Pull-up Enable bit(1,2)
1 = On-chip pull-up is enabled (pull-up on D+ with FSEN = 1 or D- with FSEN = 0)
0 = On-chip pull-up is disabled

bit 3 **UTRDIS:** On-Chip Transceiver Disable bit(1,3)
1 = On-chip transceiver is disabled
0 = On-chip transceiver is active

bit 2 **FSEN:** Full-Speed Enable bit(1)
1 = Full-speed device: controls transceiver edge rates; requires input clock at 48 MHz
0 = Low-speed device: controls transceiver edge rates; requires input clock at 6 MHz

bit 1-0 **PPB<1:0>:** Ping-Pong Buffers Configuration bits
11 = Even/Odd ping-pong buffers are enabled for Endpoints 1 to 15
10 = Even/Odd ping-pong buffers are enabled for all endpoints
01 = Even/Odd ping-pong buffer are enabled for OUT Endpoint 0
00 = Even/Odd ping-pong buffers are disabled

Note 1: The UPUEN, UTRDIS and FSEN bits should never be changed while the USB module is enabled. These values must be preconfigured prior to enabling the module.
2: This bit is only valid when the on-chip transceiver is active (UTRDIS = 0); otherwise, it is ignored.
3: If UTRDIS is set, the $\overline{\text{UOE}}$ signal will be active, independent of the UOEMON bit setting.

22.2.2.2 Internal Pull-up Resistors

The PIC18F46J50 family devices have built-in pull-up resistors designed to meet the requirements for low-speed and full-speed USB. The UPUEN bit (UCFG<4>) enables the internal pull-ups. Figure 22-1 shows the pull-ups and their control.

Note: A compliant USB device should never source any current onto the +5V VBUS line of the USB cable. Additionally, USB devices should not source any current on the D+ and D- data lines whenever the +5V VBUS line is less than 1.17V. In order to be USB compliant, applications which are not purely bus-powered should monitor the VBUS line and avoid turning on the USB module and the D+ or D- pull-up resistor until VBUS is greater than 1.17V. VBUS can be connected to, and monitored, by a 5V tolerant I/O pin, or if a resistive divider is used, by an analog capable pin.

22.2.2.3 External Pull-up Resistors

External pull-ups may also be used. The VUSB pin may be used to pull up D+ or D-. The pull-up resistor must be 1.5 kΩ (±5%) as required by the USB specifications.

Figure 22-2 provides an example of external circuitry.

FIGURE 22-2: EXTERNAL CIRCUITRY

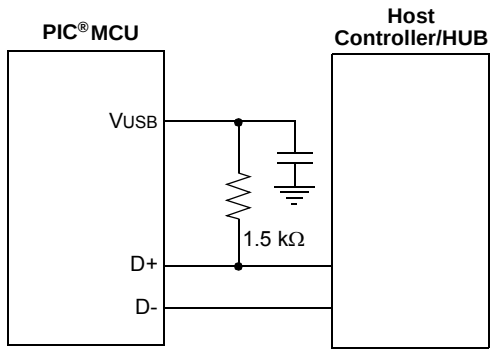

Note: The above setting shows a typical connection for a full-speed configuration using an on-chip regulator and an external pull-up resistor.

22.2.2.4 Ping-Pong Buffer Configuration

The usage of ping-pong buffers is configured using the PPB<1:0> bits. Refer to **Section 22.4.4 "Ping-Pong Buffering"** for a complete explanation of the ping-pong buffers.

22.2.2.5 Eye Pattern Test Enable

An automatic eye pattern test can be generated by the module when the UCFG<7> bit is set. The eye pattern output will be observable based on module settings, meaning that the user is first responsible for configuring the SIE clock settings, pull-up resistor and Transceiver mode. In addition, the module has to be enabled.

Once UTEYE is set, the module emulates a switch from a receive to transmit state and will start transmitting a J-K-J-K bit sequence (K-J-K-J for full speed). The sequence will be repeated indefinitely while the Eye Pattern Test mode is enabled.

Note that this bit should never be set while the module is connected to an actual USB system. This Test mode is intended for board verification to aid with USB certification tests. It is intended to show a system developer the noise integrity of the USB signals which can be affected by board traces, impedance mismatches and proximity to other system components. It does not properly test the transition from a receive to a transmit state. Although the eye pattern is not meant to replace the more complex USB certification test, it should aid during first order system debugging.

© 2011 Microchip Technology Inc.

22.2.3 USB STATUS REGISTER (USTAT)

The USB Status register reports the transaction status within the SIE. When the SIE issues a USB transfer complete interrupt, USTAT should be read to determine the status of the transfer. USTAT contains the transfer endpoint number, direction and Ping-Pong Buffer Pointer value (if used).

Note:	The data in the USB Status register is valid only when the TRNIF interrupt flag is asserted.

The USTAT register is actually a read window into a four-byte status FIFO, maintained by the SIE. It allows the microcontroller to process one transfer while the SIE processes additional endpoints (Figure 22-3). When the SIE completes using a buffer for reading or writing data, it updates the USTAT register. If another USB transfer is performed before a transaction complete interrupt is serviced, the SIE will store the status of the next transfer into the status FIFO.

Clearing the Transfer Complete Flag bit, TRNIF, causes the SIE to advance the FIFO. If the next data in the FIFO holding register is valid, the SIE will reassert the interrupt within 5 TCY of clearing TRNIF. If no additional data is present, TRNIF will remain clear and USTAT data will no longer be reliable.

Note:	If an endpoint request is received while the USTAT FIFO is full, the SIE will automatically issue a NAK back to the host.

FIGURE 22-3: USTAT FIFO

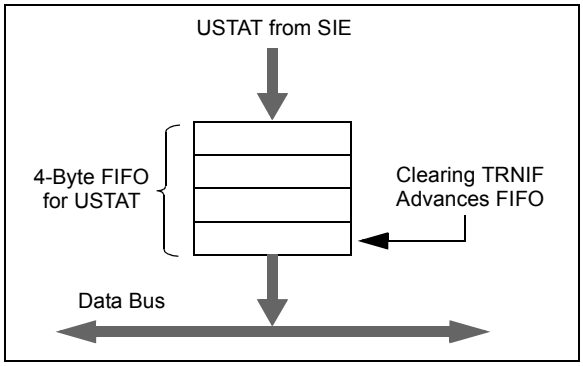

REGISTER 22-3: USTAT: USB STATUS REGISTER (ACCESS F64h)

U-0	R-x	R-x	R-x	R-x	R-x	R-x	U-0
—	ENDP3	ENDP2	ENDP1	ENDP0	DIR	PPBI(1)	—
bit 7							bit 0

Legend:			
R = Readable bit	W = Writable bit	U = Unimplemented bit, read as ‘0’	
-n = Value at POR	‘1’ = Bit is set	‘0’ = Bit is cleared	x = Bit is unknown

bit 7 **Unimplemented:** Read as ‘0’

bit 6-3 **ENDP<3:0>:** Encoded Number of Last Endpoint Activity bits
(represents the number of the BDT updated by the last USB transfer)
1111 = Endpoint 15
1110 = Endpoint 14
.
.
.
0001 = Endpoint 1
0000 = Endpoint 0

bit 2 **DIR:** Last BD Direction Indicator bit
1 = The last transaction was an IN token
0 = The last transaction was an OUT or SETUP token

bit 1 **PPBI:** Ping-Pong BD Pointer Indicator bit(1)
1 = The last transaction was to the Odd BD bank
0 = The last transaction was to the Even BD bank

bit 0 **Unimplemented:** Read as ‘0’

Note 1: This bit is only valid for endpoints with available Even and Odd BD registers.

22.2.4 USB ENDPOINT CONTROL

Each of the 16 possible bidirectional endpoints has its own independent control register, UEPn (where 'n' represents the endpoint number). Each register has an identical complement of control bits. Register 22-4 provides the prototype.

The EPHSHK bit (UEPn<4>) controls handshaking for the endpoint. Setting this bit enables USB handshaking. Typically, this bit is always set except when using isochronous endpoints.

The EPCONDIS bit (UEPn<3>) is used to enable or disable USB control operations (SETUP) through the endpoint. Clearing this bit enables SETUP transactions. Note that the corresponding EPINEN and EPOUTEN bits must be set to enable IN and OUT transactions. For Endpoint 0, this bit should always be cleared since the USB specifications identify Endpoint 0 as the default control endpoint.

The EPOUTEN bit (UEPn<2>) is used to enable or disable USB OUT transactions from the host. Setting this bit enables OUT transactions. Similarly, the EPINEN bit (UEPn<1>) enables or disables USB IN transactions from the host.

The EPSTALL bit (UEPn<0>) is used to indicate a STALL condition for the endpoint. If a STALL is issued on a particular endpoint, the EPSTALL bit for that endpoint pair will be set by the SIE. This bit remains set until it is cleared through firmware or until the SIE is reset.

REGISTER 22-4: UEPn: USB ENDPOINT n CONTROL REGISTER (UEP0 THROUGH UEP15) (BANKED F26h-F35h)

U-0	U-0	U-0	R/W-0	R/W-0	R/W-0	R/W-0	R/W-0
—	—	—	EPHSHK	EPCONDIS	EPOUTEN	EPINEN	EPSTALL
bit 7							bit 0

Legend:			
R = Readable bit	W = Writable bit	U = Unimplemented bit, read as '0'	
-n = Value at POR	'1' = Bit is set	'0' = Bit is cleared	x = Bit is unknown

bit 7-5 **Unimplemented:** Read as '0'

bit 4 **EPHSHK:** Endpoint Handshake Enable bit
1 = Endpoint handshake is enabled
0 = Endpoint handshake is disabled (typically used for isochronous endpoints)

bit 3 **EPCONDIS:** Bidirectional Endpoint Control bit
If EPOUTEN = 1 and EPINEN = 1:
1 = Disable Endpoint n from control transfers; only IN and OUT transfers are allowed
0 = Enable Endpoint n for control (SETUP) transfers; IN and OUT transfers are also allowed

bit 2 **EPOUTEN:** Endpoint Output Enable bit
1 = Endpoint n output is enabled
0 = Endpoint n output is disabled

bit 1 **EPINEN:** Endpoint Input Enable bit
1 = Endpoint n input is enabled
0 = Endpoint n input is disabled

bit 0 **EPSTALL:** Endpoint Stall Indicator bit
1 = Endpoint n has issued one or more STALL packets
0 = Endpoint n has not issued any STALL packets

© 2011 Microchip Technology Inc.

22.2.5 USB ADDRESS REGISTER (UADDR)

The USB Address register contains the unique USB address that the peripheral will decode when active. UADDR is reset to 00h when a USB Reset is received, indicated by URSTIF, or when a Reset is received from the microcontroller. The USB address must be written by the microcontroller during the USB setup phase (enumeration) as part of the Microchip USB firmware support.

22.2.6 USB FRAME NUMBER REGISTERS (UFRMH:UFRML)

The Frame Number registers contain the 11-bit frame number. The low-order byte is contained in UFRML, while the three high-order bits are contained in UFRMH. The register pair is updated with the current frame number whenever a SOF token is received. For the microcontroller, these registers are read-only. The Frame Number registers are primarily used for isochronous transfers. The contents of the UFRMH and UFRML registers are only valid when the 48 MHz SIE clock is active (i.e., contents are inaccurate when the SUSPND (UCON<1>) bit = 1).

22.3 USB RAM

USB data moves between the microcontroller core and the SIE through a memory space known as the USB RAM. This is a special dual access memory that is mapped into the normal data memory space in Banks 0 through 14 (00h to EBFh) for a total of 3.8 Kbytes (Figure 22-4).

Bank 4 (400h through 4FFh) is used specifically for endpoint buffer control, while Banks 0 through 3 and Banks 5 through 14 are available for USB data. Depending on the type of buffering being used, all but 8 bytes of Bank 4 may also be available for use as USB buffer space.

Although USB RAM is available to the microcontroller as data memory, the sections that are being accessed by the SIE should not be accessed by the microcontroller. A semaphore mechanism is used to determine the access to a particular buffer at any given time. This is discussed in **Section 22.4.1.1 "Buffer Ownership"**.

FIGURE 22-4: IMPLEMENTATION OF USB RAM IN DATA MEMORY SPACE

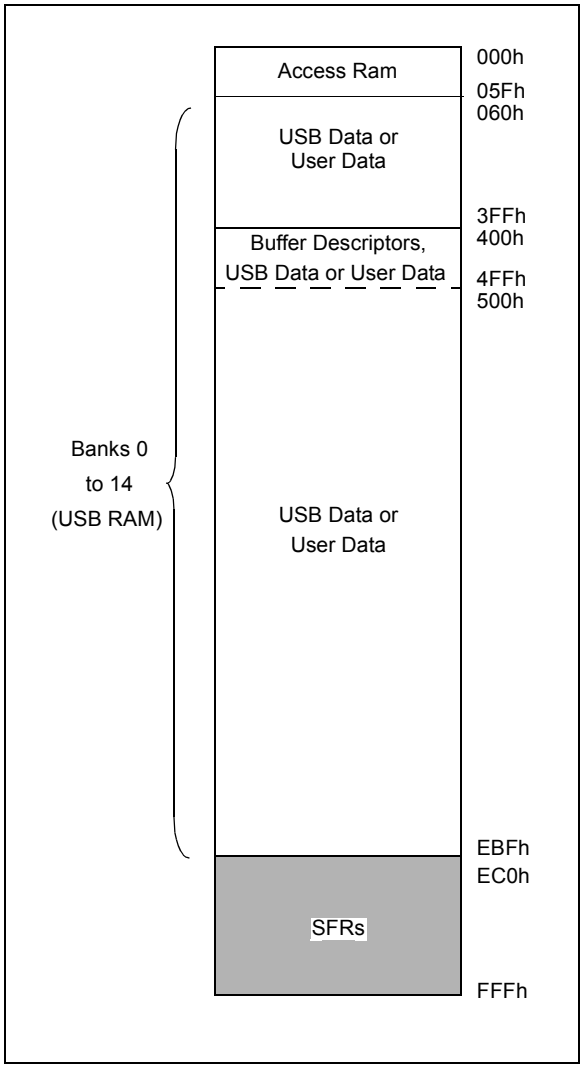

22.4 Buffer Descriptors and the Buffer Descriptor Table

The registers in Bank 4 are used specifically for endpoint buffer control in a structure known as the Buffer Descriptor Table (BDT). This provides a flexible method for users to construct and control endpoint buffers of various lengths and configuration.

The BDT is composed of Buffer Descriptors (BD) which are used to define and control the actual buffers in the USB RAM space. Each BD, in turn, consists of four registers, where n represents one of the 64 possible BDs (range of 0 to 63):

- BDnSTAT: BD Status register
- BDnCNT: BD Byte Count register
- BDnADRL: BD Address Low register
- BDnADRH: BD Address High register

BDs always occur as a four-byte block in the sequence: BDnSTAT:BDnCNT:BDnADRL:BDnADRH. The address of BDnSTAT is always an offset of (4n – 1) (in hexadecimal) from 400h, with n being the buffer descriptor number.

Depending on the buffering configuration used (**Section 22.4.4 "Ping-Pong Buffering"**), there are up to 32, 33 or 64 sets of buffer descriptors. At a minimum, the BDT must be at least 8 bytes long. This is because the USB specification mandates that every device must have Endpoint 0, with both input and output for initial setup. Depending on the endpoint and buffering configuration, the BDT can be as long as 256 bytes.

Although they can be thought of as Special Function Registers, the Buffer Descriptor Status and Address registers are not hardware mapped, as conventional microcontroller SFRs in Bank 15 are. If the endpoint corresponding to a particular BD is not enabled, its registers are not used. Instead of appearing as unimplemented addresses, however, they appear as available RAM. Only when an endpoint is enabled by setting the UEPn<1> bit does the memory at those addresses become functional as BD registers. As with any address in the data memory space, the BD registers have an indeterminate value on any device Reset.

Figure 22-5 provides an example of a BD for a 64-byte buffer, starting at 500h. A particular set of BD registers is only valid if the corresponding endpoint has been enabled using the UEPn register. All BD registers are available in USB RAM. The BD for each endpoint should be set up prior to enabling the endpoint.

22.4.1 BD STATUS AND CONFIGURATION

Buffer descriptors not only define the size of an endpoint buffer, but also determine its configuration and control. Most of the configuration is done with the BD Status register, BDnSTAT. Each BD has its own unique and correspondingly numbered BDnSTAT register.

FIGURE 22-5: EXAMPLE OF A BUFFER DESCRIPTOR

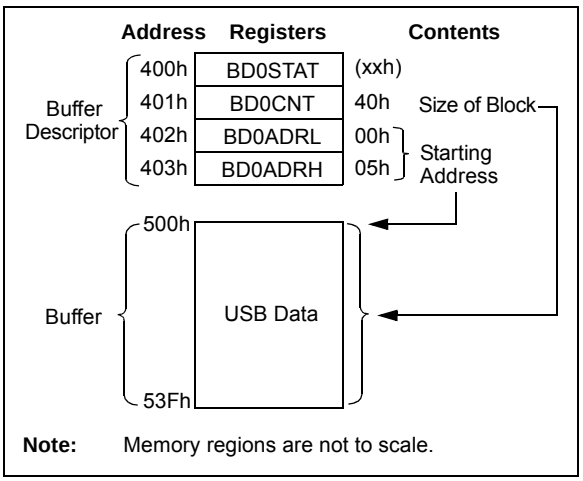

Unlike other control registers, the bit configuration for the BDnSTAT register is context-sensitive. There are two distinct configurations, depending on whether the microcontroller or the USB module is modifying the BD and buffer at a particular time; only 3-bit definitions are shared between the two.

22.4.1.1 Buffer Ownership

Because the buffers and their BDs are shared between the CPU and the USB module, a simple semaphore mechanism is used to distinguish which is allowed to update the BD and associated buffers in memory.

This is done by using the UOWN bit (BDnSTAT<7>) as a semaphore to distinguish which is allowed to update the BD and associated buffers in memory. UOWN is the only bit that is shared between the two configurations of BDnSTAT.

When UOWN is clear, the BD entry is "owned" by the microcontroller core. When the UOWN bit is set, the BD entry and the buffer memory are "owned" by the USB peripheral. The core should not modify the BD or its corresponding data buffer during this time. Note that the microcontroller core can still read BDnSTAT, while the SIE owns the buffer and vice versa.

The buffer descriptors have a different meaning based on the source of the register update. Prior to placing ownership with the USB peripheral, the user can configure the basic operation of the peripheral through the BDnSTAT bits. During this time, the byte count and buffer location registers can also be set.

When UOWN is set, the user can no longer depend on the values that were written to the BDs. From this point, the SIE updates the BDs as necessary, overwriting the original BD values. The BDnSTAT register is updated by the SIE with the token PID and the transfer count, BDnCNT, is updated.

© 2011 Microchip Technology Inc.

The BDnSTAT byte of the BDT should always be the last byte updated when preparing to arm an endpoint. The SIE will clear the UOWN bit when a transaction has completed.

No hardware mechanism exists to block access when the UOWN bit is set. Thus, unexpected behavior can occur if the microcontroller attempts to modify memory when the SIE owns it. Similarly, reading such memory may produce inaccurate data until the USB peripheral returns ownership to the microcontroller.

22.4.1.2 BDnSTAT Register (CPU Mode)

When UOWN = 0, the microcontroller core owns the BD. At this point, the other seven bits of the register take on control functions.

The Data Toggle Sync Enable bit, DTSEN (BDnSTAT<3>), controls data toggle parity checking. Setting DTSEN enables data toggle synchronization by the SIE. When enabled, it checks the data packet's parity against the value of DTS (BDnSTAT<6>). If a packet arrives with an incorrect synchronization, the data will essentially be ignored. It will not be written to the USB RAM and the USB transfer complete interrupt flag will not be set. The SIE will send an ACK token back to the host to Acknowledge receipt, however. The effects of the DTSEN bit on the SIE are summarized in Table 22-1.

The Buffer Stall bit, BSTALL (BDnSTAT<2>), provides support for control transfers, usually one-time stalls on Endpoint 0. It also provides support for the SET_FEATURE/CLEAR_FEATURE commands specified in Chapter 9 of the USB specification; typically, continuous STALLs to any endpoint other than the default control endpoint.

The BSTALL bit enables buffer stalls. Setting BSTALL causes the SIE to return a STALL token to the host if a received token would use the BD in that location. The EPSTALL bit in the corresponding UEPn control register is set and a STALL interrupt is generated when a STALL is issued to the host. The UOWN bit remains set and the BDs are not changed unless a SETUP token is received. In this case, the STALL condition is cleared and the ownership of the BD is returned to the microcontroller core.

The BD<9:8> bits (BDnSTAT<1:0>) store the two most significant digits of the SIE byte count; the lower 8 digits are stored in the corresponding BDnCNT register. See **Section 22.4.2 "BD Byte Count"** for more information.

TABLE 22-1: EFFECT OF DTSEN BIT ON ODD/EVEN (DATA0/DATA1) PACKET RECEPTION

OUT Packet from Host	BDnSTAT Settings		Device Response after Receiving Packet			
	DTSEN	DTS	Handshake	UOWN	TRNIF	BDnSTAT and USTAT Status
DATA0	1	0	ACK	0	1	Updated
DATA1	1	0	ACK	1	0	Not Updated
DATA0	1	1	ACK	1	0	Not Updated
DATA1	1	1	ACK	0	1	Updated
Either	0	x	ACK	0	1	Updated
Either, with error	x	x	(None)	1	0	Not Updated

Legend: x = don't care

REGISTER 22-5: BDnSTAT: BUFFER DESCRIPTOR n STATUS REGISTER (BD0STAT THROUGH BD63STAT), CPU MODE (BANKED 4xxh)

R/W-x	R/W-x	R/W-0	R/W-0	R/W-x	R/W-x	R/W-x	R/W-x
UOWN(1)	DTS(2)	r(3)	r(3)	DTSEN	BSTALL	BC9	BC8
bit 7							bit 0

Legend:	r = Reserved bit		
R = Readable bit	W = Writable bit	U = Unimplemented bit, read as '0'	
-n = Value at POR	'1' = Bit is set	'0' = Bit is cleared	x = Bit is unknown

bit 7 **UOWN:** USB Own bit(1)
- 0 = The microcontroller core owns the BD and its corresponding buffer

bit 6 **DTS:** Data Toggle Synchronization bit(2)
- 1 = Data 1 packet
- 0 = Data 0 packet

bit 5-4 **Reserved:** These bits should always be programmed to '0'(3)

bit 3 **DTSEN:** Data Toggle Synchronization Enable bit
- 1 = Data toggle synchronization is enabled; data packets with an incorrect Sync value will be ignored, except for a SETUP transaction, which is accepted even if the data toggle bits do not match
- 0 = No data toggle synchronization is performed

bit 2 **BSTALL:** Buffer Stall Enable bit
- 1 = Buffer stall is enabled; STALL handshake issued if a token is received that would use the BD in the given location (UOWN bit remains set, BD value is unchanged)
- 0 = Buffer stall is disabled

bit 1-0 **BC<9:8>:** Byte Count 9 and 8 bits

The byte count bits represent the number of bytes that will be transmitted for an IN token or received during an OUT token. Together with BC<7:0>, the valid byte counts are 0-1023.

Note 1: This bit must be initialized by the user to the desired value prior to enabling the USB module.
2: This bit is ignored unless DTSEN = 1.
3: If these bits are set, USB communication may not work. Hence, these bits should always be maintained as '0'.

© 2011 Microchip Technology Inc.

22.4.1.3 BDnSTAT Register (SIE Mode)

When the BD and its buffer are owned by the SIE, most of the bits in BDnSTAT take on a different meaning. The configuration is shown in Register 22-6. Once UOWN is set, any data or control settings previously written there by the user will be overwritten with data from the SIE.

The BDnSTAT register is updated by the SIE with the token Packet Identifier (PID) which is stored in BDnSTAT<5:2>. The transfer count in the corresponding BDnCNT register is updated. Values that overflow the 8-bit register carry over to the two most significant digits of the count, stored in BDnSTAT<1:0>.

22.4.2 BD BYTE COUNT

The byte count represents the total number of bytes that will be transmitted during an IN transfer. After an IN transfer, the SIE will return the number of bytes sent to the host.

For an OUT transfer, the byte count represents the maximum number of bytes that can be received and stored in USB RAM. After an OUT transfer, the SIE will return the actual number of bytes received. If the number of bytes received exceeds the corresponding byte count, the data packet will be rejected and a NAK handshake will be generated. When this happens, the byte count will not be updated.

The 10-bit byte count is distributed over two registers. The lower 8 bits of the count reside in the BDnCNT register. The upper two bits reside in BDnSTAT<1:0>. This represents a valid byte range of 0 to 1023.

22.4.3 BD ADDRESS VALIDATION

The BD Address register pair contains the starting RAM address location for the corresponding endpoint buffer. No mechanism is available in hardware to validate the BD address.

If the value of the BD address does not point to an address in the USB RAM, or if it points to an address within another endpoint's buffer, data is likely to be lost or overwritten. Similarly, overlapping a receive buffer (OUT endpoint) with a BD location in use can yield unexpected results. When developing USB applications, the user may want to consider the inclusion of software-based address validation in their code.

REGISTER 22-6: BDnSTAT: BUFFER DESCRIPTOR n STATUS REGISTER (BD0STAT THROUGH BD63STAT), SIE MODE (DATA RETURNED BY THE SIE TO THE MCU) (BANKED 4xxh)

R/W-x	r-x	R/W-x	R/W-x	R/W-x	R/W-x	R/W-x	R/W-x
UOWN	r	PID3	PID2	PID1	PID0	BC9	BC8
bit 7							bit 0

Legend:	r = Reserved bit		
R = Readable bit	W = Writable bit	U = Unimplemented bit, read as '0'	
-n = Value at POR	'1' = Bit is set	'0' = Bit is cleared	x = Bit is unknown

bit 7 **UOWN:** USB Own bit
1 = The SIE owns the BD and its corresponding buffer

bit 6 **Reserved:** Not written by the SIE

bit 5-2 **PID<3:0>:** Packet Identifier bits
The received token PID value of the last transfer (IN, OUT or SETUP transactions only).

bit 1-0 **BC<9:8>:** Byte Count 9 and 8 bits
These bits are updated by the SIE to reflect the actual number of bytes received on an OUT transfer and the actual number of bytes transmitted on an IN transfer.

22.4.4 PING-PONG BUFFERING

An endpoint is defined to have a ping-pong buffer when it has two sets of BD entries: one set for an Even transfer and one set for an Odd transfer. This allows the CPU to process one BD while the SIE is processing the other BD. Double-buffering BDs in this way allows for maximum throughput to/from the USB.

The USB module supports four modes of operation:

- No ping-pong support
- Ping-pong buffer support for OUT Endpoint 0 only
- Ping-pong buffer support for all endpoints
- Ping-pong buffer support for all other endpoints except Endpoint 0

The ping-pong buffer settings are configured using the PPB<1:0> bits in the UCFG register.

The USB module keeps track of the Ping-Pong Pointer, individually for each endpoint. All pointers are initially reset to the Even BD when the module is enabled. After the completion of a transaction (UOWN cleared by the SIE), the pointer is toggled to the Odd BD. After the completion of the next transaction, the pointer is toggled back to the Even BD and so on.

The Even/Odd status of the last transaction is stored in the PPBI bit of the USTAT register. The user can reset all Ping-Pong Pointers to Even using the PPBRST bit.

Figure 22-6 shows the four different modes of operation and how USB RAM is filled with the BDs.

BDs have a fixed relationship to a particular endpoint, depending on the buffering configuration. Table 22-2 provides the mapping of BDs to endpoints. This relationship also means that gaps may occur in the BDT if endpoints are not enabled contiguously. This theoretically means that the BDs for disabled endpoints could be used as buffer space. In practice, users should avoid using such spaces in the BDT unless a method of validating BD addresses is implemented.

FIGURE 22-6: BUFFER DESCRIPTOR TABLE MAPPING FOR BUFFERING MODES

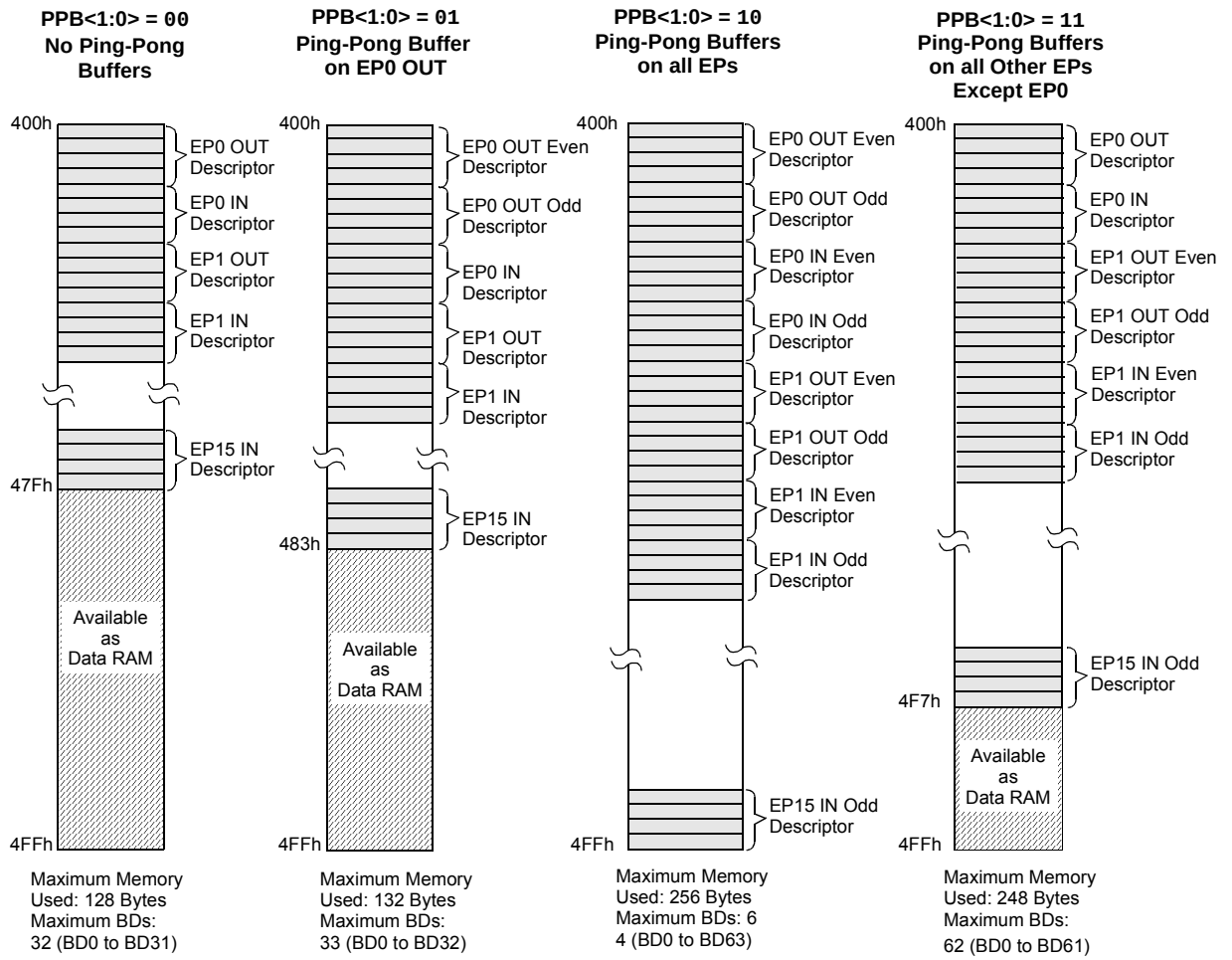

Note: Memory area is not shown to scale.

© 2011 Microchip Technology Inc.

TABLE 22-2: ASSIGNMENT OF BUFFER DESCRIPTORS FOR THE DIFFERENT BUFFERING MODES

Endpoint	BDs Assigned to Endpoint							
	Mode 0 (No Ping-Pong)		Mode 1 (Ping-Pong on EP0 OUT)		Mode 2 (Ping-Pong on all EPs)		Mode 3 (Ping-Pong on all other EPs, except EP0)	
	Out	In	Out	In	Out	In	Out	In
0	0	1	0 (E), 1 (O)	2	0 (E), 1 (O)	2 (E), 3 (O)	0	1
1	2	3	3	4	4 (E), 5 (O)	6 (E), 7 (O)	2 (E), 3 (O)	4 (E), 5 (O)
2	4	5	5	6	8 (E), 9 (O)	10 (E), 11 (O)	6 (E), 7 (O)	8 (E), 9 (O)
3	6	7	7	8	12 (E), 13 (O)	14 (E), 15 (O)	10 (E), 11 (O)	12 (E), 13 (O)
4	8	9	9	10	16 (E), 17 (O)	18 (E), 19 (O)	14 (E), 15 (O)	16 (E), 17 (O)
5	10	11	11	12	20 (E), 21 (O)	22 (E), 23 (O)	18 (E), 19 (O)	20 (E), 21 (O)
6	12	13	13	14	24 (E), 25 (O)	26 (E), 27 (O)	22 (E), 23 (O)	24 (E), 25 (O)
7	14	15	15	16	28 (E), 29 (O)	30 (E), 31 (O)	26 (E), 27 (O)	28 (E), 29 (O)
8	16	17	17	18	32 (E), 33 (O)	34 (E), 35 (O)	30 (E), 31 (O)	32 (E), 33 (O)
9	18	19	19	20	36 (E), 37 (O)	38 (E), 39 (O)	34 (E), 35 (O)	36 (E), 37 (O)
10	20	21	21	22	40 (E), 41 (O)	42 (E), 43 (O)	38 (E), 39 (O)	40 (E), 41 (O)
11	22	23	23	24	44 (E), 45 (O)	46 (E), 47 (O)	42 (E), 43 (O)	44 (E), 45 (O)
12	24	25	25	26	48 (E), 49 (O)	50 (E), 51 (O)	46 (E), 47 (O)	48 (E), 49 (O)
13	26	27	27	28	52 (E), 53 (O)	54 (E), 55 (O)	50 (E), 51 (O)	52 (E), 53 (O)
14	28	29	29	30	56 (E), 57 (O)	58 (E), 59 (O)	54 (E), 55 (O)	56 (E), 57 (O)
15	30	31	31	32	60 (E), 61 (O)	62 (E), 63 (O)	58 (E), 59 (O)	60 (E), 61 (O)

Legend: (E) = Even transaction buffer, (O) = Odd transaction buffer

TABLE 22-3: SUMMARY OF USB BUFFER DESCRIPTOR TABLE REGISTERS

Name	Bit 7	Bit 6	Bit 5	Bit 4	Bit 3	Bit 2	Bit 1	Bit 0
BDnSTAT(1)	UOWN	DTS(4)	PID3(2)	PID2(2)	PID1(2) DTSEN(3)	PID0(2) BSTALL(3)	BC9	BC8
BDnCNT(1)	Byte Count							
BDnADRL(1)	Buffer Address Low							
BDnADRH(1)	Buffer Address High							

Note 1: For buffer descriptor registers, n may have a value of 0 to 63. For the sake of brevity, all 64 registers are shown as one generic prototype. All registers have indeterminate Reset values (xxxx xxxx).

2: Bits, 5 through 2, of the BDnSTAT register are used by the SIE to return PID<3:0> values once the register is turned over to the SIE (UOWN bit is set). Once the registers have been under SIE control, the values written for DTSEN and BSTALL are no longer valid.

3: Prior to turning the buffer descriptor over to the SIE (UOWN bit is cleared), bits, 5 through 2, of the BDnSTAT register are used to configure the DTSEN and BSTALL settings.

4: This bit is ignored unless DTSEN = 1.

22.5 USB Interrupts

The USB module can generate multiple interrupt conditions. To accommodate all of these interrupt sources, the module is provided with its own interrupt logic structure, similar to that of the microcontroller. USB interrupts are enabled with one set of control registers and trapped with a separate set of flag registers. All sources are funneled into a single USB interrupt request, USBIF (PIR2<4>), in the microcontroller's interrupt logic.

Figure 22-7 provides the interrupt logic for the USB module. There are two layers of interrupt registers in the USB module. The top level consists of overall USB status interrupts. These interrupts are enabled and flagged in the UIE and UIR registers, respectively. The second level consists of USB error conditions, which are enabled and flagged in the UEIR and UEIE registers. An interrupt condition in any of these areas triggers a USB Error Interrupt Flag (UERRIF) in the top level.

Interrupts may be used to trap routine events in a USB transaction. Figure 22-8 provides some common events within a USB frame and their corresponding interrupts.

FIGURE 22-7: USB INTERRUPT LOGIC FUNNEL

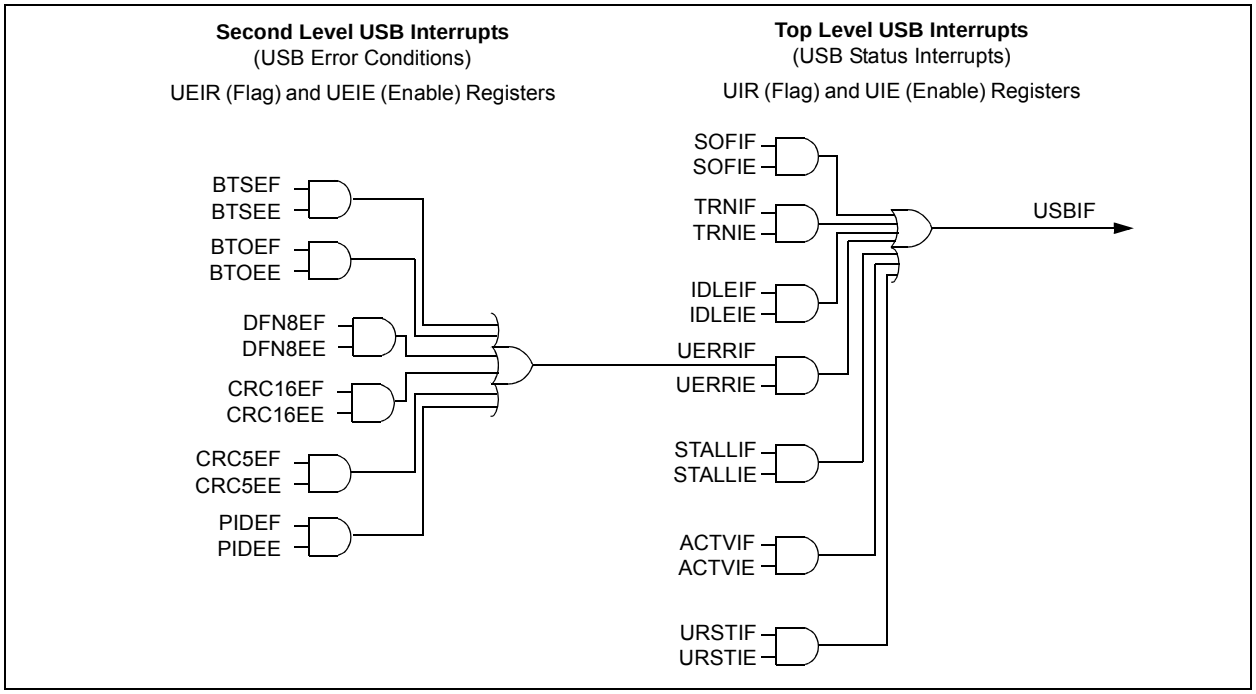

FIGURE 22-8: EXAMPLE OF A USB TRANSACTION AND INTERRUPT EVENTS

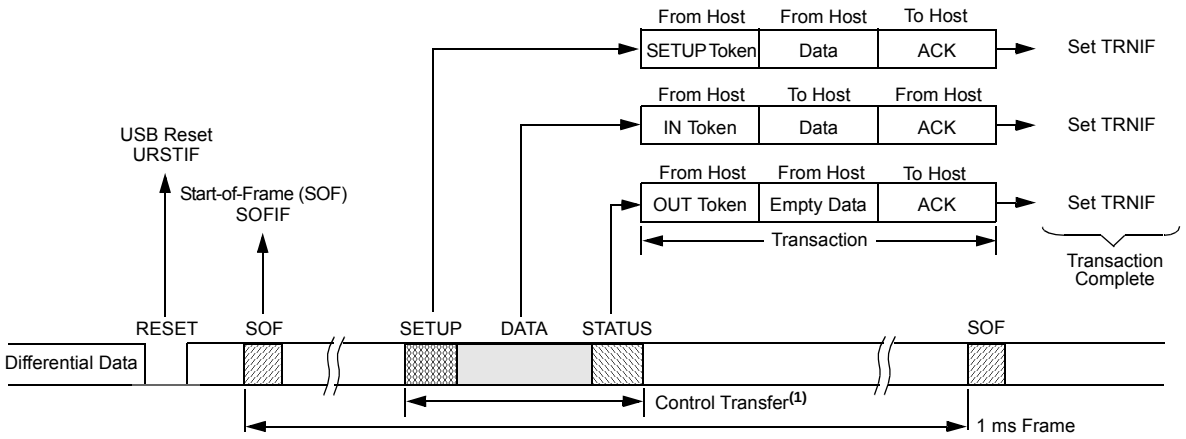

Note 1: The control transfer shown here is only an example showing events that can occur for every transaction. Typical control transfers will spread across multiple frames.

© 2011 Microchip Technology Inc.

22.5.1 USB INTERRUPT STATUS REGISTER (UIR)

The USB Interrupt Status register (Register 22-7) contains the flag bits for each of the USB status interrupt sources. Each of these sources has a corresponding interrupt enable bit in the UIE register. All of the USB status flags are ORed together to generate the USBIF interrupt flag for the microcontroller's interrupt funnel.

Once an interrupt bit has been set by the SIE, it must be cleared by software by writing a '0'. The flag bits can also be set in software, which can aid in firmware debugging.

When the USB module is in the Low-Power Suspend mode (UCON<1> = 1), the SIE does not get clocked. When in this state, the SIE cannot process packets, and therefore, cannot detect new interrupt conditions other than the Activity Detect Interrupt, ACTVIF. The ACTVIF bit is typically used by USB firmware to detect when the microcontroller should bring the USB module out of the Low-Power Suspend mode (UCON<1> = 0).

REGISTER 22-7: UIR: USB INTERRUPT STATUS REGISTER (ACCESS F62h)

U-0	R/W-0	R/W-0	R/W-0	R/W-0	R/W-0	R-0	R/W-0
—	SOFIF	STALLIF	IDLEIF(1)	TRNIF(2)	ACTVIF(3)	UERRIF(4)	URSTIF
bit 7							bit 0

Legend:			
R = Readable bit	W = Writable bit	U = Unimplemented bit, read as '0'	
-n = Value at POR	'1' = Bit is set	'0' = Bit is cleared	x = Bit is unknown

bit 7 **Unimplemented:** Read as '0'

bit 6 **SOFIF:** Start-of-Frame Token Interrupt bit
1 = A Start-of-Frame token was received by the SIE
0 = No Start-of-Frame token was received by the SIE

bit 5 **STALLIF:** A STALL Handshake Interrupt bit
1 = A STALL handshake was sent by the SIE
0 = A STALL handshake has not been sent

bit 4 **IDLEIF:** Idle Detect Interrupt bit(1)
1 = Idle condition was detected (constant Idle state of 3 ms or more)
0 = No Idle condition was detected

bit 3 **TRNIF:** Transaction Complete Interrupt bit(2)
1 = Processing of pending transaction is complete; read USTAT register for endpoint information
0 = Processing of pending transaction is not complete or no transaction is pending

bit 2 **ACTVIF:** Bus Activity Detect Interrupt bit(3)
1 = Activity on the D+/D- lines was detected
0 = No activity was detected on the D+/D- lines

bit 1 **UERRIF:** USB Error Condition Interrupt bit(4)
1 = An unmasked error condition has occurred
0 = No unmasked error condition has occurred.

bit 0 **URSTIF:** USB Reset Interrupt bit
1 = Valid USB Reset occurred; 00h is loaded into UADDR register
0 = No USB Reset has occurred

Note 1: Once an Idle state is detected, the user may want to place the USB module in Suspend mode.
2: Clearing this bit will cause the USTAT FIFO to advance (valid only for IN, OUT and SETUP tokens).
3: This bit is typically unmasked only following the detection of a UIDLE interrupt event.
4: Only error conditions enabled through the UEIE register will set this bit. This bit is a status bit only and cannot be set or cleared by the user.

22.5.1.1 Bus Activity Detect Interrupt Bit (ACTVIF)

The ACTVIF bit cannot be cleared immediately after the USB module wakes up from Suspend or while the USB module is suspended. A few clock cycles are required to synchronize the internal hardware state machine before the ACTVIF bit can be cleared by firmware. Clearing the ACTVIF bit before the internal hardware is synchronized may not have an effect on the value of ACTVIF. Additionally, if the USB module uses the clock from the 96 MHz PLL source, then after clearing the SUSPND bit, the USB module may not be immediately operational while waiting for the 96 MHz PLL to lock. The application code should clear the ACTVIF flag as provided in Example 22-1.

Note:	Only one ACTVIF interrupt is generated when resuming from the USB bus Idle condition. If user firmware clears the ACTVIF bit, the bit will not immediately become set again, even when there is continuous bus traffic. Bus traffic must cease long enough to generate another IDLEIF condition before another ACTVIF interrupt can be generated.

EXAMPLE 22-1: CLEARING ACTVIF BIT (UIR<2>)

Assembly:

```
    BCF     UCON, SUSPND
LOOP:
    BTFSS   UIR, ACTVIF
    BRA     DONE
    BCF     UIR, ACTVIF
    BRA     LOOP
DONE:
```

C:

```
UCONbits.SUSPND = 0;
while (UIRbits.ACTVIF) { UIRbits.ACTVIF = 0; }
```


© 2011 Microchip Technology Inc.

22.5.2 USB INTERRUPT ENABLE REGISTER (UIE)

The USB Interrupt Enable (UIE) register (Register 22-8) contains the enable bits for the USB status interrupt sources. Setting any of these bits will enable the respective interrupt source in the UIR register.

The values in this register only affect the propagation of an interrupt condition to the microcontroller's interrupt logic. The flag bits are still set by their interrupt conditions, allowing them to be polled and serviced without actually generating an interrupt.

REGISTER 22-8: UIE: USB INTERRUPT ENABLE REGISTER (BANKED F36h)

U-0	R/W-0	R/W-0	R/W-0	R/W-0	R/W-0	R/W-0	R/W-0
—	SOFIE	STALLIE	IDLEIE	TRNIE	ACTVIE	UERRIE	URSTIE
bit 7							bit 0

Legend:			
R = Readable bit	W = Writable bit	U = Unimplemented bit, read as '0'	
-n = Value at POR	'1' = Bit is set	'0' = Bit is cleared	x = Bit is unknown

bit 7 **Unimplemented:** Read as '0'

bit 6 **SOFIE:** Start-of-Frame Token Interrupt Enable bit
1 = Start-of-Frame token interrupt is enabled
0 = Start-of-Frame token interrupt is disabled

bit 5 **STALLIE:** STALL Handshake Interrupt Enable bit
1 = STALL interrupt is enabled
0 = STALL interrupt is disabled

bit 4 **IDLEIE:** Idle Detect Interrupt Enable bit
1 = Idle detect interrupt is enabled
0 = Idle detect interrupt is disabled

bit 3 **TRNIE:** Transaction Complete Interrupt Enable bit
1 = Transaction interrupt is enabled
0 = Transaction interrupt is disabled

bit 2 **ACTVIE:** Bus Activity Detect Interrupt Enable bit
1 = Bus activity detect interrupt is enabled
0 = Bus activity detect interrupt is disabled

bit 1 **UERRIE:** USB Error Interrupt Enable bit
1 = USB error interrupt is enabled
0 = USB error interrupt is disabled

bit 0 **URSTIE:** USB Reset Interrupt Enable bit
1 = USB Reset interrupt is enabled
0 = USB Reset interrupt is disabled

22.5.3 USB ERROR INTERRUPT STATUS REGISTER (UEIR)

The USB Error Interrupt Status register (Register 22-9) contains the flag bits for each of the error sources within the USB peripheral. Each of these sources is controlled by a corresponding interrupt enable bit in the UEIE register. All of the USB error flags are ORed together to generate the USB Error Interrupt Flag (UERRIF) at the top level of the interrupt logic.

Each error bit is set as soon as the error condition is detected. Thus, the interrupt will typically not correspond with the end of a token being processed.

Once an interrupt bit has been set by the SIE, it must be cleared by software by writing a '0'.

REGISTER 22-9: UEIR: USB ERROR INTERRUPT STATUS REGISTER (ACCESS F63h)

R/C-0	U-0	U-0	R/C-0	R/C-0	R/C-0	R/C-0	R/C-0
BTSEF	—	—	BTOEF	DFN8EF	CRC16EF	CRC5EF	PIDEF
bit 7							bit 0

Legend:			
R = Readable bit	C = Clearable bit	U = Unimplemented bit, read as '0'	
-n = Value at POR	'1' = Bit is set	'0' = Bit is cleared	x = Bit is unknown

bit 7 **BTSEF:** Bit Stuff Error Flag bit
1 = A bit stuff error has been detected
0 = No bit stuff error has been detected

bit 6-5 **Unimplemented:** Read as '0'

bit 4 **BTOEF:** Bus Turnaround Time-out Error Flag bit
1 = Bus turnaround time-out has occurred (more than 16 bit times of Idle from previous EOP elapsed)
0 = No bus turnaround time-out has occurred

bit 3 **DFN8EF:** Data Field Size Error Flag bit
1 = The data field was not an integral number of bytes
0 = The data field was an integral number of bytes

bit 2 **CRC16EF:** CRC16 Failure Flag bit
1 = The CRC16 failed
0 = The CRC16 passed

bit 1 **CRC5EF:** CRC5 Host Error Flag bit
1 = The token packet was rejected due to a CRC5 error
0 = The token packet was accepted

bit 0 **PIDEF:** PID Check Failure Flag bit
1 = PID check failed
0 = PID check passed

© 2011 Microchip Technology Inc.

22.5.4 USB ERROR INTERRUPT ENABLE REGISTER (UEIE)

The USB Error Interrupt Enable register (Register 22-10) contains the enable bits for each of the USB error interrupt sources. Setting any of these bits will enable the respective error interrupt source in the UEIR register to propagate into the UERR bit at the top level of the interrupt logic.

As with the UIE register, the enable bits only affect the propagation of an interrupt condition to the microcontroller's interrupt logic. The flag bits are still set by their interrupt conditions, allowing them to be polled and serviced without actually generating an interrupt.

REGISTER 22-10: UEIE: USB ERROR INTERRUPT ENABLE REGISTER (BANKED F37h)

R/W-0	U-0	U-0	R/W-0	R/W-0	R/W-0	R/W-0	R/W-0
BTSEE	—	—	BTOEE	DFN8EE	CRC16EE	CRC5EE	PIDEE
bit 7							bit 0

Legend:			
R = Readable bit	W = Writable bit	U = Unimplemented bit, read as '0'	
-n = Value at POR	'1' = Bit is set	'0' = Bit is cleared	x = Bit is unknown

bit 7 **BTSEE:** Bit Stuff Error Interrupt Enable bit
1 = Bit stuff error interrupt is enabled
0 = Bit stuff error interrupt is disabled

bit 6-5 **Unimplemented:** Read as '0'

bit 4 **BTOEE:** Bus Turnaround Time-out Error Interrupt Enable bit
1 = Bus turnaround time-out error interrupt is enabled
0 = Bus turnaround time-out error interrupt is disabled

bit 3 **DFN8EE:** Data Field Size Error Interrupt Enable bit
1 = Data field size error interrupt is enabled
0 = Data field size error interrupt is disabled

bit 2 **CRC16EE:** CRC16 Failure Interrupt Enable bit
1 = CRC16 failure interrupt is enabled
0 = CRC16 failure interrupt is disabled

bit 1 **CRC5EE:** CRC5 Host Error Interrupt Enable bit
1 = CRC5 host error interrupt is enabled
0 = CRC5 host error interrupt is disabled

bit 0 **PIDEE:** PID Check Failure Interrupt Enable bit
1 = PID check failure interrupt is enabled
0 = PID check failure interrupt is disabled

22.6 USB Power Modes

Many USB applications will likely have several different sets of power requirements and configuration. The most common power modes encountered are Bus Power Only, Self-Power Only and Dual Power with Self-Power Dominance. The most common cases are presented here. Also provided is a means of estimating the current consumption of the USB transceiver.

22.6.1 BUS POWER ONLY

In Bus Power Only mode, all power for the application is drawn from the USB (Figure 22-9). This is effectively the simplest power method for the device.

In order to meet the inrush current requirements of the *"USB 2.0 Specification"*, the total effective capacitance appearing across VBUS and ground must be no more than 10 µF. If not, some kind of inrush timing is required. For more details, see **Section 7.2.4** of the *"USB 2.0 Specification"*.

According to the *"USB 2.0 Specification"*, all USB devices must also support a Low-Power Suspend mode. In the USB Suspend mode, devices must consume no more than 2.5 mA from the 5V VBUS line of the USB cable.

The host signals the USB device to enter the Suspend mode by stopping all USB traffic to that device for more than 3 ms. This condition will cause the IDLEIF bit in the UIR register to become set.

During the USB Suspend mode, the D+ or D- pull-up resistor must remain active, which will consume some of the allowed suspend current: 2.5 mA budget.

FIGURE 22-9: BUS POWER ONLY

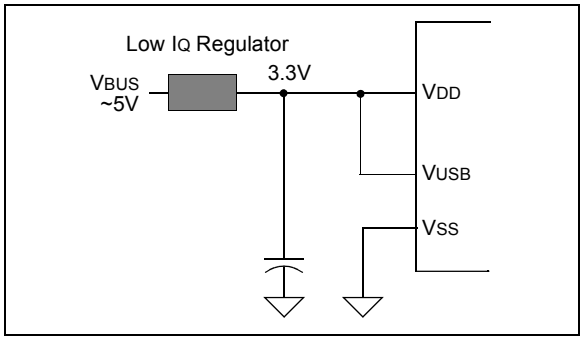

22.6.2 SELF-POWER ONLY

In Self-Power Only mode, the USB application provides its own power, with very little power being pulled from the USB. See Figure 22-10 for an example.

Note that an attach indication is added to indicate when the USB has been connected and the host is actively powering VBUS.

In order to meet compliance specifications, the USB module (and the D+ or D- pull-up resistor) should not be enabled until the host actively drives VBUS high. One of the 5.5V tolerant I/O pins may be used for this purpose.

The application should never source any current onto the 5V VBUS pin of the USB cable.

FIGURE 22-10: SELF-POWER ONLY

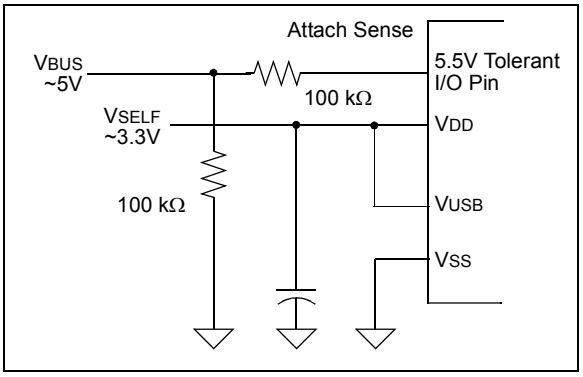

22.6.3 DUAL POWER WITH SELF-POWER DOMINANCE

Some applications may require a dual power option. This allows the application to use internal power primarily, but switch to power from the USB when no internal power is available. See Figure 22-11 for a simple Dual Power with Self-Power Dominance mode example, which automatically switches between Self-Power Only and USB Bus Power Only modes.

Dual power devices must also meet all of the special requirements for inrush current and Suspend mode current, and must not enable the USB module until VBUS is driven high. See **Section 22.6.1 "Bus Power Only"** and **Section 22.6.2 "Self-Power Only"** for descriptions of those requirements. Additionally, dual power devices must never source current onto the 5V VBUS pin of the USB cable.

FIGURE 22-11: DUAL POWER EXAMPLE

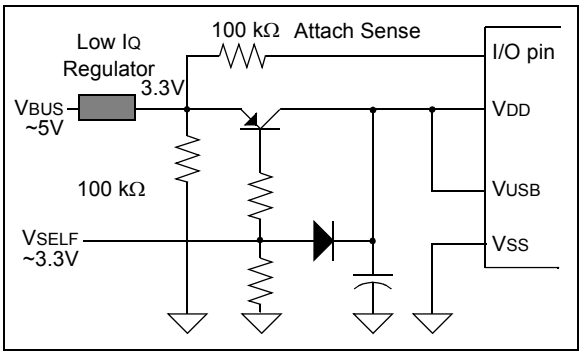

Note:	Users should keep in mind the limits for devices drawing power from the USB. According to *"USB Specification 2.0"*, this cannot exceed 100 mA per low-power device or 500 mA per high-power device.

© 2011 Microchip Technology Inc.

22.6.4 USB TRANSCEIVER CURRENT CONSUMPTION

The USB transceiver consumes a variable amount of current depending on the characteristic impedance of the USB cable, the length of the cable, the VUSB supply voltage and the actual data patterns moving across the USB cable. Longer cables have larger capacitances and consume more total energy when switching output states.

Data patterns that consist of “IN” traffic consume far more current than “OUT” traffic. IN traffic requires the PIC® MCU to drive the USB cable, whereas OUT traffic requires that the host drive the USB cable.

The data that is sent across the USB cable is NRZI encoded. In the NRZI encoding scheme, ‘0’ bits cause a toggling of the output state of the transceiver (either from a “J” state to a “K” state, or vise versa). With the exception of the effects of bit stuffing, NRZI encoded ‘1’ bits do not cause the output state of the transceiver to change. Therefore, IN traffic consisting of data bits of value, ‘0’, causes the most current consumption, as the transceiver must charge/discharge the USB cable in order to change states.

More details about NRZI encoding and bit stuffing can be found in the USB specification’s **Section 7.1**, although knowledge of such details is not required to make USB applications using the PIC18F46J50 family of microcontrollers. Among other things, the SIE handles bit stuffing/unstuffing, NRZI encoding/decoding and CRC generation/checking in hardware.

The total transceiver current consumption will be application-specific. However, to help estimate how much current actually may be required in full-speed applications, Equation 22-1 can be used.

See Equation 22-2 to know how this equation can be used for a theoretical application.

EQUATION 22-1: ESTIMATING USB TRANSCEIVER CURRENT CONSUMPTION

$$I_{XCVR} = \frac{(40\ mA \bullet V_{USB} \bullet P_{ZERO} \bullet P_{IN} \bullet L_{CABLE})}{(3.3V \bullet 5m)} + I_{PULLUP}$$

Legend: VUSB – Voltage applied to the VUSB pin in volts (should be 3.0V to 3.6V).

PZERO – Percentage (in decimal) of the IN traffic bits sent by the PIC® MCU that are a value of ‘0’.

PIN – Percentage (in decimal) of total bus bandwidth that is used for IN traffic.

LCABLE – Length (in meters) of the USB cable. The *“USB 2.0 Specification”* requires that full-speed applications use cables no longer than 5m.

IPULLUP – Current which the nominal, 1.5 kΩ pull-up resistor (when enabled) must supply to the USB cable. On the host or hub end of the USB cable, 15 kΩ nominal resistors (14.25 kΩ to 24.8 kΩ) are present which pull both the D+ and D- lines to ground. During bus Idle conditions (such as between packets or during USB Suspend mode), this results in up to 218 μA of quiescent current drawn at 3.3V.

IPULLUP is also dependant on bus traffic conditions and can be as high as 2.2 mA when the USB bandwidth is fully utilized (either IN or OUT traffic) for data that drives the lines to the “K” state, most of the time.

EQUATION 22-2: CALCULATING USB TRANSCEIVER CURRENT†

For this example, the following assumptions are made about the application:

- 3.3V will be applied to V_{USB} and V_{DD}, with the core voltage regulator enabled.
- This is a full-speed application that uses one interrupt IN endpoint that can send one packet of 64 bytes every 1 ms, with no restrictions on the values of the bytes being sent. The application may or may not have additional traffic on OUT endpoints.
- A regular USB “B” or “mini-B” connector will be used on the application circuit board.

In this case, P_{ZERO} = 100% = 1, because there should be no restriction on the value of the data moving through the IN endpoint. All 64 kbps of data could potentially be bytes of value, 00h. Since ‘0’ bits cause toggling of the output state of the transceiver, they cause the USB transceiver to consume extra current charging/discharging the cable. In this case, 100% of the data bits sent can be of value, ‘0’. This should be considered the “max” value, as normal data will consist of a fair mix of ones and zeros.

This application uses 64 kbps for IN traffic out of the total bus bandwidth of 1.5 Mbps (12 Mbps), therefore:

$$Pin = \frac{64\ kbps}{1.5\ Mbps} = 4.3\% = 0.043$$

Since a regular “B” or “mini-B” connector is used in this application, the end user may plug in any type of cable, up to the maximum allowed 5m length. Therefore, we use the worst-case length:

L_{CABLE} = 5 meters

Assume I_{PULLUP} = 2.2 mA. The actual value of I_{PULLUP} will likely be closer to 218 μA, but allow for the worst-case. USB bandwidth is shared between all the devices which are plugged into the root port (via hubs). If the application is plugged into a USB 1.1 hub that has other devices plugged into it, your device may see host to device traffic on the bus, even if it is not addressed to your device. Since any traffic, regardless of source, can increase the I_{PULLUP} current above the base 218 μA, it is safest to allow for the worst-case of 2.2 mA.

Therefore:

$$I_{XCVR} = \frac{(40\ mA \bullet 3.3V \bullet 1 \bullet 0.043 \bullet 5m)}{(3.3V \bullet 5m)} + 2.2\ mA = 3.9\ mA$$

† The calculated value should be considered an approximation and additional guardband or application-specific product testing is recommended. The transceiver current is “in addition to” the rest of the current consumed by the PIC18F46J50 family device that is needed to run the core, drive the other I/O lines, power the various modules, etc.

© 2011 Microchip Technology Inc.

22.7 Oscillator

The USB module has specific clock requirements. For full-speed operation, the clock source must be 48 MHz. Even so, the microcontroller core and other peripherals are not required to run at that clock speed. Available clocking options are described in detail in **Section 3.3 "Oscillator Settings for USB"**.

22.8 USB Firmware and Drivers

Microchip provides a number of application-specific resources, such as USB firmware and driver support. Refer to www.microchip.com for the latest firmware and driver support.

TABLE 22-4: REGISTERS ASSOCIATED WITH USB MODULE OPERATION(1)

Name	Bit 7	Bit 6	Bit 5	Bit 4	Bit 3	Bit 2	Bit 1	Bit 0	Details on Page:
INTCON	GIE/GIEH	PEIE/GIEL	TMR0IE	INT0IE	RBIE	TMR0IF	INT0IF	RBIF	69
IPR2	OSCFIP	CM2IP	CM1IP	USBIP	BCL1IP	HLVDIP	TMR3IP	CCP2IP	71
PIR2	OSCFIF	CM2IF	CM1IF	USBIF	BCL1IF	HLVDIF	TMR3IF	CCP2IF	71
PIE2	OSCFIE	CM2IE	CM1IE	USBIE	BCL1IE	HLVDIE	TMR3IE	CCP2IE	71
UCON	—	PPBRST	SE0	PKTDIS	USBEN	RESUME	SUSPND	—	73
UCFG	UTEYE	UOEMON	—	UPUEN	UTRDIS	FSEN	PPB1	PPB0	74
USTAT	—	ENDP3	ENDP2	ENDP1	ENDP0	DIR	PPBI	—	73
UADDR	—	ADDR6	ADDR5	ADDR4	ADDR3	ADDR2	ADDR1	ADDR0	74
UFRML	FRM7	FRM6	FRM5	FRM4	FRM3	FRM2	FRM1	FRM0	73
UFRMH	—	—	—	—	—	FRM10	FRM9	FRM8	73
UIR	—	SOFIF	STALLIF	IDLEIF	TRNIF	ACTVIF	UERRIF	URSTIF	73
UIE	—	SOFIE	STALLIE	IDLEIE	TRNIE	ACTVIE	UERRIE	URSTIE	74
UEIR	BTSEF	—	—	BTOEF	DFN8EF	CRC16EF	CRC5EF	PIDEF	73
UEIE	BTSEE	—	—	BTOEE	DFN8EE	CRC16EE	CRC5EE	PIDEE	74
UEP0	—	—	—	EPHSHK	EPCONDIS	EPOUTEN	EPINEN	EPSTALL	75
UEP1	—	—	—	EPHSHK	EPCONDIS	EPOUTEN	EPINEN	EPSTALL	75
UEP2	—	—	—	EPHSHK	EPCONDIS	EPOUTEN	EPINEN	EPSTALL	75
UEP3	—	—	—	EPHSHK	EPCONDIS	EPOUTEN	EPINEN	EPSTALL	75
UEP4	—	—	—	EPHSHK	EPCONDIS	EPOUTEN	EPINEN	EPSTALL	75
UEP5	—	—	—	EPHSHK	EPCONDIS	EPOUTEN	EPINEN	EPSTALL	75
UEP6	—	—	—	EPHSHK	EPCONDIS	EPOUTEN	EPINEN	EPSTALL	75
UEP7	—	—	—	EPHSHK	EPCONDIS	EPOUTEN	EPINEN	EPSTALL	74
UEP8	—	—	—	EPHSHK	EPCONDIS	EPOUTEN	EPINEN	EPSTALL	74
UEP9	—	—	—	EPHSHK	EPCONDIS	EPOUTEN	EPINEN	EPSTALL	74
UEP10	—	—	—	EPHSHK	EPCONDIS	EPOUTEN	EPINEN	EPSTALL	74
UEP11	—	—	—	EPHSHK	EPCONDIS	EPOUTEN	EPINEN	EPSTALL	74
UEP12	—	—	—	EPHSHK	EPCONDIS	EPOUTEN	EPINEN	EPSTALL	74
UEP13	—	—	—	EPHSHK	EPCONDIS	EPOUTEN	EPINEN	EPSTALL	74
UEP14	—	—	—	EPHSHK	EPCONDIS	EPOUTEN	EPINEN	EPSTALL	74
UEP15	—	—	—	EPHSHK	EPCONDIS	EPOUTEN	EPINEN	EPSTALL	74

Legend: — = unimplemented, read as '0'. Shaded cells are not used by the USB module.

Note 1: This table includes only those hardware mapped SFRs located in Bank 15 of the data memory space. The Buffer Descriptor registers, which are mapped into Bank 4 and are not true SFRs, are listed separately in Table 22-3.

22.9 Overview of USB

This section presents some of the basic USB concepts and useful information necessary to design a USB device. Although much information is provided in this section, there is a plethora of information provided within the USB specifications and class specifications. Thus, the reader is encouraged to refer to the USB specifications for more information (www.usb.org). If you are very familiar with the details of USB, then this section serves as a basic, high-level refresher of USB.

22.9.1 LAYERED FRAMEWORK

USB device functionality is structured into a layered framework, graphically illustrated in Figure 22-12. Each level is associated with a functional level within the device. The highest layer, other than the device, is the configuration. A device may have multiple configurations. For example, a particular device may have multiple power requirements based on Self-Power Only or Bus Power Only modes.

For each configuration, there may be multiple interfaces. Each interface could support a particular mode of that configuration.

Below the interface is the endpoint(s). Data is directly moved at this level. There can be as many as 16 bidirectional endpoints. Endpoint 0 is always a control endpoint, and by default, when the device is on the bus, Endpoint 0 must be available to configure the device.

22.9.2 FRAMES

Information communicated on the bus is grouped into 1 ms time slots, referred to as frames. Each frame can contain many transactions to various devices and endpoints. See Figure 22-8 for an example of a transaction within a frame.

22.9.3 TRANSFERS

There are four transfer types defined in the USB specification.

- **Isochronous:** This type provides a transfer method for large amounts of data (up to 1023 bytes) with timely delivery ensured; however, the data integrity is not ensured. This is good for streaming applications where small data loss is not critical, such as audio.
- **Bulk:** This type of transfer method allows for large amounts of data to be transferred with ensured data integrity; however, the delivery timeliness is not ensured.
- **Interrupt:** This type of transfer provides for ensured timely delivery for small blocks of data, plus data integrity is ensured.
- **Control:** This type provides for device setup control.

While full-speed devices support all transfer types, low-speed devices are limited to interrupt and control transfers only.

22.9.4 POWER

Power is available from the USB. The USB specification defines the bus power requirements. Devices may either be self-powered or bus-powered. Self-powered devices draw power from an external source, while bus-powered devices use power supplied from the bus.

FIGURE 22-12: USB LAYERS

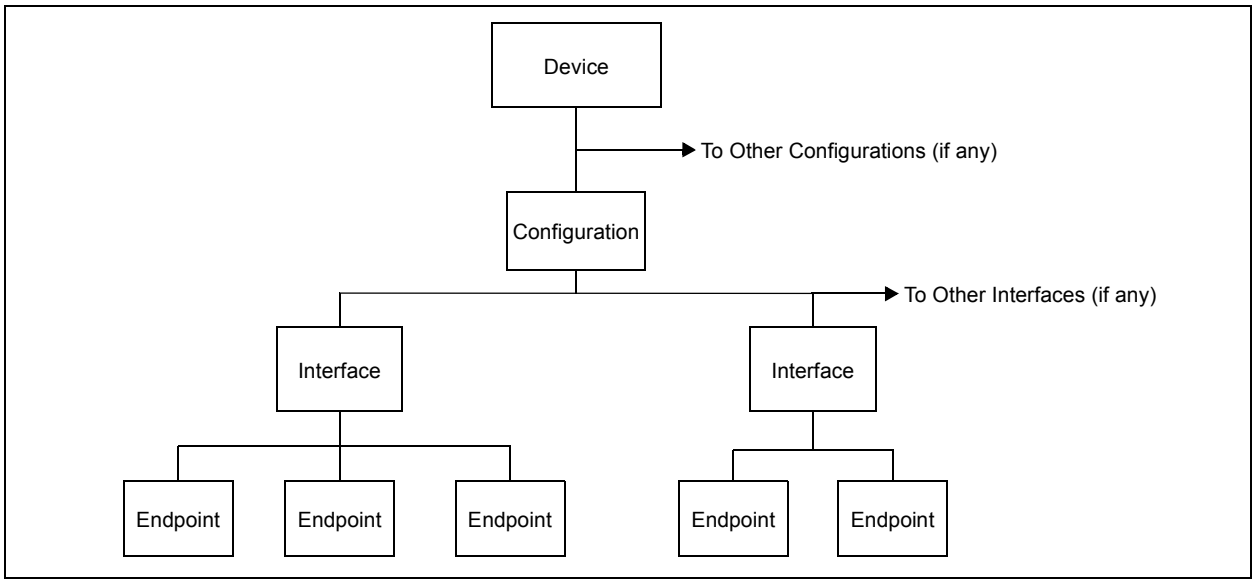

© 2011 Microchip Technology Inc.

The USB specification limits the power taken from the bus. Each device is ensured 100 mA at approximately 5V (one unit load). Additional power may be requested, up to a maximum of 500 mA.

Note that power above one unit load is a request and the host or hub is not obligated to provide the extra current. Thus, a device capable of consuming more than one unit load must be able to maintain a low-power configuration of a 1-unit load or less, if necessary.

The USB specification also defines a Suspend mode. In this situation, current must be limited to 500 μA, averaged over one second. A device must enter a suspend state after 3 ms of inactivity (i.e., no SOF tokens for 3 ms). A device entering Suspend mode must drop current consumption within 10 ms after suspend. Likewise, when signaling a wake-up, the device must signal a wake-up within 10 ms of drawing current above the suspend limit.

22.9.5 ENUMERATION

When the device is initially attached to the bus, the host enters an enumeration process in an attempt to identify the device. Essentially, the host interrogates the device, gathering information, such as power consumption, data rates and sizes, protocol, and other descriptive information; descriptors contain this information. A typical enumeration process would be as follows:

1. USB Reset – Reset the device. Thus, the device is not configured and does not have an address (Address 0).
2. Get Device Descriptor – The host requests a small portion of the device descriptor.
3. USB Reset – Reset the device again.
4. Set Address – The host assigns an address to the device.
5. Get Device Descriptor – The host retrieves the device descriptor, gathering information, such as manufacturer, type of device and maximum control packet size.
6. Get configuration descriptors.
7. Get any other descriptors.
8. Set a configuration.

The exact enumeration process depends on the host.

22.9.6 DESCRIPTORS

There are eight different standard descriptor types, of which, five are most important for this device.

22.9.6.1 Device Descriptor

The device descriptor provides general information, such as manufacturer, product number, serial number, the class of the device and the number of configurations. There is only one device descriptor.

22.9.6.2 Configuration Descriptor

The configuration descriptor provides information on the power requirements of the device and how many different interfaces are supported when in this configuration. There may be more than one configuration for a device (i.e., low-power and high-power configurations).

22.9.6.3 Interface Descriptor

The interface descriptor details the number of endpoints used in this interface, as well as the class of the interface. There may be more than one interface for a configuration.

22.9.6.4 Endpoint Descriptor

The endpoint descriptor identifies the transfer type (**Section 22.9.3 "Transfers"**) and direction, and some other specifics for the endpoint. There may be many endpoints in a device and endpoints may be shared in different configurations.

22.9.6.5 String Descriptor

Many of the previous descriptors reference one or more string descriptors. String descriptors provide human readable information about the layer (**Section 22.9.1 "Layered Framework"**) they describe. Often, these strings show up in the host to help the user identify the device. String descriptors are generally optional to save memory and are encoded in a unicode format.

22.9.7 BUS SPEED

Each USB device must indicate its bus presence and speed to the host. This is accomplished through a 1.5 kΩ resistor, which is connected to the bus at the time of the attachment event.

Depending on the speed of the device, the resistor pulls up either the D+ or D- line to 3.3V. For a low-speed device, the pull-up resistor is connected to the D- line. For a full-speed device, the pull-up resistor is connected to the D+ line.

22.9.8 CLASS SPECIFICATIONS AND DRIVERS

USB specifications include class specifications, which operating system vendors optionally support. Examples of classes include Audio, Mass Storage, Communications and Human Interface (HID). In most cases, a driver is required at the host side to 'talk' to the USB device. In custom applications, a driver may need to be developed. Fortunately, drivers are available for most common host systems for the most common classes of devices. Thus, these drivers can be reused.

NOTES:

© 2011 Microchip Technology Inc.

23.0 COMPARATOR MODULE

The analog comparator module contains two comparators that can be independently configured in a variety of ways. The inputs can be selected from the analog inputs and two internal voltage references. The digital outputs are available at the pin level and can also be read through the control register. Multiple output and interrupt event generation is also available. Figure 23-1 provides a generic single comparator from the module.

Key features of the module are:

- Independent comparator control
- Programmable input configuration
- Output to both pin and register levels
- Programmable output polarity
- Independent interrupt generation for each comparator with configurable interrupt-on-change

23.1 Registers

The CMxCON registers (Register 23-1) select the input and output configuration for each comparator, as well as the settings for interrupt generation.

The CMSTAT register (Register 23-2) provides the output results of the comparators. The bits in this register are read-only.

FIGURE 23-1: COMPARATOR SIMPLIFIED BLOCK DIAGRAM

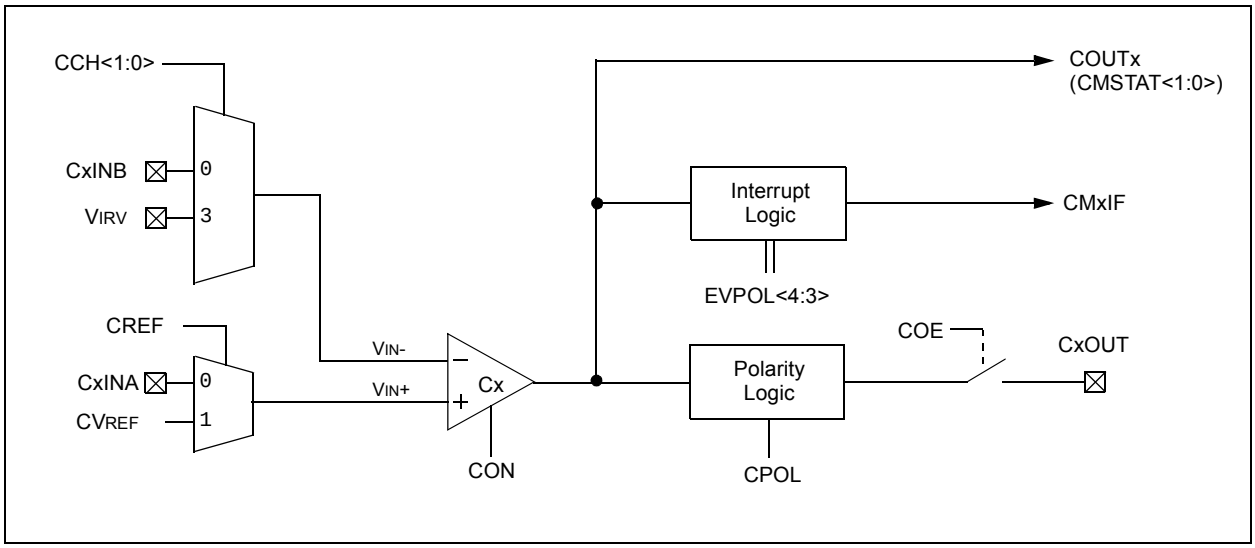

REGISTER 23-1: CMxCON: COMPARATOR CONTROL x REGISTER (ACCESS FD2h, FD1h)

R/W-0	R/W-0	R/W-0	R/W-1	R/W-1	R/W-1	R/W-1	R/W-1
CON	COE	CPOL	EVPOL1	EVPOL0	CREF	CCH1	CCH0
bit 7							bit 0

Legend:			
R = Readable bit	W = Writable bit	U = Unimplemented bit, read as '0'	
-n = Value at POR	'1' = Bit is set	'0' = Bit is cleared	x = Bit is unknown

bit 7 **CON:** Comparator Enable bit
1 = Comparator is enabled
0 = Comparator is disabled

bit 6 **COE:** Comparator Output Enable bit
1 = Comparator output is present on the CxOUT pin (assigned in the PPS module)
0 = Comparator output is internal only

bit 5 **CPOL:** Comparator Output Polarity Select bit
1 = Comparator output is inverted
0 = Comparator output is not inverted

bit 4-3 **EVPOL<1:0>:** Interrupt Polarity Select bits
11 = Interrupt generation on any change of the output(1)
10 = Interrupt generation only on high-to-low transition of the output
01 = Interrupt generation only on low-to-high transition of the output
00 = Interrupt generation is disabled

bit 2 **CREF:** Comparator Reference Select bit (non-inverting input)
1 = Non-inverting input connects to internal CV_{REF} voltage
0 = Non-inverting input connects to CxINA pin

bit 1-0 **CCH<1:0>:** Comparator Channel Select bits
11 = Inverting input of the comparator connects to V_{IRV} (0.6V)
00 = Inverting input of the comparator connects to CxINB pin

Note 1: The CMxIF bit is automatically set any time this mode is selected and must be cleared by the application after the initial configuration.

REGISTER 23-2: CMSTAT: COMPARATOR STATUS REGISTER (ACCESS F70h)

U-0	U-0	U-0	U-0	U-0	U-0	R-1	R-1
—	—	—	—	—	—	COUT2	COUT1
bit 7							bit 0

Legend:			
R = Readable bit	W = Writable bit	U = Unimplemented bit, read as '0'	
-n = Value at POR	'1' = Bit is set	'0' = Bit is cleared	x = Bit is unknown

bit 7-2 **Unimplemented:** Read as '0'

bit 1-0 **COUT<2:1>:** Comparator x Status bits
If CPOL = 0 (non-inverted polarity):
1 = Comparator $V_{IN+} > V_{IN-}$
0 = Comparator $V_{IN+} < V_{IN-}$
If CPOL = 1 (inverted polarity):
1 = Comparator $V_{IN+} < V_{IN-}$
0 = Comparator $V_{IN+} > V_{IN-}$

© 2011 Microchip Technology Inc.

23.2 Comparator Operation

A single comparator is shown in Figure 23-2, along with the relationship between the analog input levels and the digital output. When the analog input at VIN+ is less than the analog input, VIN-, the output of the comparator is a digital low level. When the analog input at VIN+ is greater than the analog input, VIN-, the output of the comparator is a digital high level. The shaded areas of the output of the comparator in Figure 23-2 represent the uncertainty due to input offsets and response time.

FIGURE 23-2: SINGLE COMPARATOR

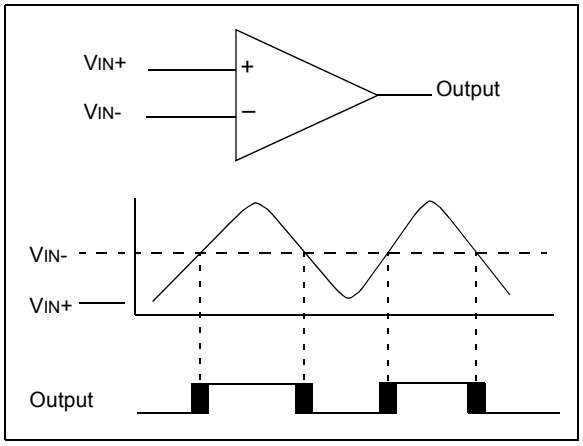

23.3 Comparator Response Time

Response time is the minimum time, after selecting a new reference voltage or input source, before the comparator output has a valid level. The response time of the comparator differs from the settling time of the voltage reference. Therefore, both of these times must be considered when determining the total response to a comparator input change. Otherwise, the maximum delay of the comparators should be used (see **Section 30.0 "Electrical Characteristics"**).

23.4 Analog Input Connection Considerations

Figure 23-3 provides a simplified circuit for an analog input. Since the analog pins are connected to a digital output, they have reverse biased diodes to VDD and VSS. The analog input, therefore, must be between VSS and VDD. If the input voltage deviates from this range by more than 0.6V in either direction, one of the diodes is forward biased and a latch-up condition may occur. A maximum source impedance of 10 kΩ is recommended for the analog sources. Any external component connected to an analog input pin, such as a capacitor or a Zener diode, should have very little leakage current.

FIGURE 23-3: COMPARATOR ANALOG INPUT MODEL

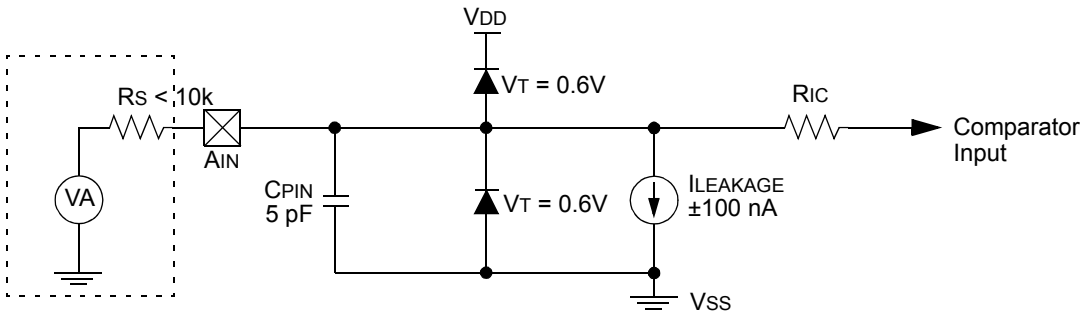

Legend:

CPIN	=	Input Capacitance
VT	=	Threshold Voltage
ILEAKAGE	=	Leakage Current at the pin due to various junctions
RIC	=	Interconnect Resistance
RS	=	Source Impedance
VA	=	Analog Voltage

23.5 Comparator Control and Configuration

Each comparator has up to eight possible combinations of inputs: up to four external analog inputs and one of two internal voltage references.

Both comparators allow a selection of the signal from pin, CxINA, or the voltage from the comparator reference (CVREF) on the non-inverting channel. This is compared to either CxINB, CTMU or the microcontroller's fixed internal reference voltage (VIRV, 0.6V nominal) on the inverting channel.

Table 23-1 provides the comparator inputs and outputs tied to fixed I/O pins.

TABLE 23-1: COMPARATOR INPUTS AND OUTPUTS

Comparator	Input or Output	I/O Pin
1	C1INA (VIN+)	RA0
	C1INB (VIN-)	RA3
	C1OUT	Remapped RPn
2	C2INA(VIN+)	RA1
	C2INB(VIN-)	RA2
	C2OUT	Remapped RPn

23.5.1 COMPARATOR ENABLE AND INPUT SELECTION

Setting the CON bit of the CMxCON register (CMxCON<7>) enables the comparator for operation. Clearing the CON bit disables the comparator, resulting in minimum current consumption.

The CCH<1:0> bits in the CMxCON register (CMxCON<1:0>) direct either one of three analog input pins, or the Internal Reference Voltage (VIRV), to the comparator, VIN-. Depending on the comparator operating mode, either an external or internal voltage reference may be used. The analog signal present at VIN- is compared to the signal at VIN+ and the digital output of the comparator is adjusted accordingly.

The external reference is used when CREF = 0 (CMxCON<2>) and VIN+ is connected to the CxINA pin. When external voltage references are used, the comparator module can be configured to have the reference sources externally. The reference signal must be between VSS and VDD, and can be applied to either pin of the comparator.

The comparator module also allows the selection of an internally generated voltage reference (CVREF) from the comparator voltage reference module. This module is described in more detail in **Section 23.0 "Comparator Module"**. The reference from the comparator voltage reference module is only available when CREF = 1. In this mode, the internal voltage reference is applied to the comparator's VIN+ pin.

Note:	The comparator input pin selected by CCH<1:0> must be configured as an input by setting both the corresponding TRIS and PCFG bits in the ANCON1 register.

23.5.2 COMPARATOR ENABLE AND OUTPUT SELECTION

The comparator outputs are read through the CMSTAT register. The CMSTAT<0> bit reads the Comparator 1 output and CMSTAT<1> bit reads the Comparator 2 output. These bits are read-only.

The comparator outputs may also be directly output to the RPn I/O pins by setting the COE bit (CMxCON<6>). When enabled, multiplexers in the output path of the pins switch to the output of the comparator.

By default, the comparator's output is at logic high whenever the voltage on VIN+ is greater than on VIN-. The polarity of the comparator outputs can be inverted using the CPOL bit (CMxCON<5>).

The uncertainty of each of the comparators is related to the input offset voltage and the response time given in the specifications, as discussed in **Section 23.2 "Comparator Operation"**.

© 2011 Microchip Technology Inc.

23.6 Comparator Interrupts

The comparator interrupt flag is set whenever any of the following occurs:

- Low-to-high transition of the comparator output
- High-to-low transition of the comparator output
- Any change in the comparator output

The comparator interrupt selection is done by the EVPOL<1:0> bits in the CMxCON register (CMxCON<4:3>).

In order to provide maximum flexibility, the output of the comparator may be inverted using the CPOL bit in the CMxCON register (CMxCON<5>). This is functionally identical to reversing the inverting and non-inverting inputs of the comparator for a particular mode.

An interrupt is generated on the low-to-high or high-to-low transition of the comparator output. This mode of interrupt generation is dependent on EVPOL<1:0> in the CMxCON register. When EVPOL<1:0> = 01 or 10, the interrupt is generated on a low-to-high or high-to-low transition of the comparator output. Once the interrupt is generated, it is required to clear the interrupt flag by software.

When EVPOL<1:0> = 11, the comparator interrupt flag is set whenever there is a change in the output value of either comparator. Software will need to maintain information about the status of the output bits, as read from CMSTAT<1:0>, to determine the actual change that occurred. The CMxIF bits (PIR2<6:5>) are the Comparator Interrupt Flags. The CMxIF bits must be reset by clearing them. Since it is also possible to write a '1' to this register, a simulated interrupt may be initiated.

Table 23-2 provides the interrupt generation corresponding to comparator input voltages and EVPOL bit settings.

Both the CMxIE bits (PIE2<6:5>) and the PEIE bit (INTCON<6>) must be set to enable the interrupt. In addition, the GIE bit (INTCON<7>) must also be set. If any of these bits are clear, the interrupt is not enabled, though the CMxIF bits will still be set if an interrupt condition occurs.

Figure 23-3 provides a simplified diagram of the interrupt section.

TABLE 23-2: COMPARATOR INTERRUPT GENERATION

CPOL	EVPOL<1:0>	Comparator Input Change	COUTx Transition	Interrupt Generated
0	00	VIN+ > VIN-	Low-to-High	No
		VIN+ < VIN-	High-to-Low	No
	01	VIN+ > VIN-	Low-to-High	Yes
		VIN+ < VIN-	High-to-Low	No
	10	VIN+ > VIN-	Low-to-High	No
		VIN+ < VIN-	High-to-Low	Yes
	11	VIN+ > VIN-	Low-to-High	Yes
		VIN+ < VIN-	High-to-Low	Yes
1	00	VIN+ > VIN-	High-to-Low	No
		VIN+ < VIN-	Low-to-High	No
	01	VIN+ > VIN-	High-to-Low	No
		VIN+ < VIN-	Low-to-High	Yes
	10	VIN+ > VIN-	High-to-Low	Yes
		VIN+ < VIN-	Low-to-High	No
	11	VIN+ > VIN-	High-to-Low	Yes
		VIN+ < VIN-	Low-to-High	Yes

23.7 Comparator Operation During Sleep

When a comparator is active and the device is placed in Sleep mode, the comparator remains active and the interrupt is functional if enabled. This interrupt will wake-up the device from Sleep mode when enabled. Each operational comparator will consume additional current. To minimize power consumption while in Sleep mode, turn off the comparators (CON = 0) before entering Sleep. If the device wakes up from Sleep, the contents of the CMxCON register are not affected.

23.8 Effects of a Reset

A device Reset forces the CMxCON registers to their Reset state. This forces both comparators and the voltage reference to the OFF state.

TABLE 23-3: REGISTERS ASSOCIATED WITH COMPARATOR MODULE

Name	Bit 7	Bit 6	Bit 5	Bit 4	Bit 3	Bit 2	Bit 1	Bit 0	Reset Values on Page:
INTCON	GIE/GIEH	PEIE/GIEL	TMR0IE	INT0IE	RBIE	TMR0IF	INT0IF	RBIF	69
PIR2	OSCFIF	CM2IF	CM1IF	USBIF	BCL1IF	HLVDIF	TMR3IF	CCP2IF	71
PIE2	OSCFIE	CM2IE	CM1IE	USBIE	BCL1IE	HLVDIE	TMR3IE	CCP2IE	71
IPR2	OSCFIP	CM2IP	CM1IP	USBIP	BCL1IP	HLVDIP	TMR3IP	CCP2IP	71
CMxCON	CON	COE	CPOL	EVPOL1	EVPOL0	CREF	CCH1	CCH0	70
CVRCON	CVREN	CVROE	CVRR	r	CVR3	CVR2	CVR1	CVR0	74
CMSTAT	—	—	—	—	—	—	COUT2	COUT1	73
ANCON0	PCFG7(1)	PCFG6(1)	PCFG5(1)	PCFG4	PCFG3	PCFG2	PCFG1	PCFG0	74
TRISA	TRISA7	TRISA6	TRISA5	—	TRISA3	TRISA2	TRISA1	TRISA0	72

Legend: — = unimplemented, read as '0', r = reserved. Shaded cells are not related to comparator operation.

Note 1: These bits and/or registers are not implemented on 28-pin devices.

© 2011 Microchip Technology Inc.

24.0 COMPARATOR VOLTAGE REFERENCE MODULE

The comparator voltage reference is a 16-tap resistor ladder network that provides a selectable reference voltage. Although its primary purpose is to provide a reference for the analog comparators, it may also be used independently of them.

Figure 24-1 provides a block diagram of the module. The resistor ladder is segmented to provide two ranges of CVREF values and has a power-down function to conserve power when the reference is not being used. The module's supply reference is provided by VDD/VSS.

FIGURE 24-1: COMPARATOR VOLTAGE REFERENCE BLOCK DIAGRAM

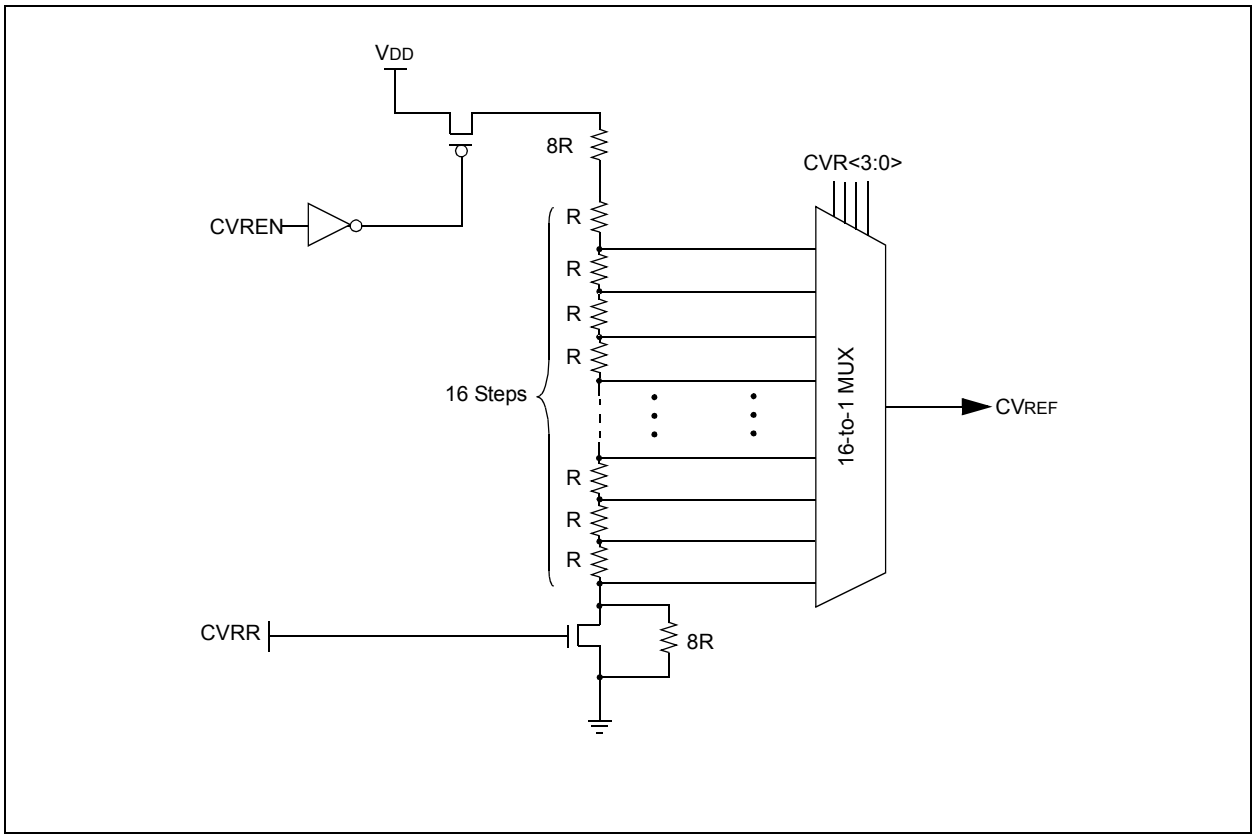

24.1 Configuring the Comparator Voltage Reference

The comparator voltage reference module is controlled through the CVRCON register (Register 24-1). The comparator voltage reference provides two ranges of output voltage, each with 16 distinct levels. The range to be used is selected by the CVRR bit (CVRCON<5>). The primary difference between the ranges is the size of the steps selected by the CVREF Selection bits (CVR<3:0>), with one range offering finer resolution. The equations used to calculate the output of the comparator voltage reference are as follows:

EQUATION 24-1: CALCULATING OUTPUT OF THE COMPARATOR VOLTAGE REFERENCE

When CVRR = 1:
$CV_{REF} = ((CVR<3:0>)/24) \times (V_{DD})$
When CVRR = 0:
$CV_{REF} = (V_{DD}/4) + ((CVR<3:0>)/32) \times (V_{DD})$

The settling time of the comparator voltage reference must be considered when changing the CVREF output (see Table 30-3 in **Section 30.0 "Electrical Characteristics"**).

REGISTER 24-1: CVRCON: COMPARATOR VOLTAGE REFERENCE CONTROL REGISTER (BANKED F53h)

R/W-0	R/W-0	R/W-0	R/W-0	R/W-0	R/W-0	R/W-0	R/W-0
CVREN	CVROE(1)	CVRR	r	CVR3	CVR2	CVR1	CVR0
bit 7							bit 0

Legend:	r = Reserved bit		
R = Readable bit	W = Writable bit	U = Unimplemented bit, read as '0'	
-n = Value at POR	'1' = Bit is set	'0' = Bit is cleared	x = Bit is unknown

bit 7 **CVREN:** Comparator Voltage Reference Enable bit
1 = CVREF circuit is powered on
0 = CVREF circuit is powered down

bit 6 **CVROE:** Comparator VREF Output Enable bit(1)
1 = CVREF voltage level is also output on the RA2/AN2/VREF-/CVREF/C2INB pin
0 = CVREF voltage is disconnected from the RA2/AN2/VREF-/CVREF/C2INB pin

bit 5 **CVRR:** Comparator VREF Range Selection bit
1 = 0 to 0.667 VDD, with VDD/24 step size (low range)
0 = 0.25 VDD to 0.75 VDD, with VDD/32 step size (high range)

bit 4 **Reserved:** Always maintain as '0'

bit 3-0 **CVR<3:0>:** Comparator VREF Value Selection bits ($0 \le (CVR<3:0>) \le 15$)
When CVRR = 1:
$CV_{REF} = ((CVR<3:0>)/24) \bullet (V_{DD})$
When CVRR = 0:
$CV_{REF} = (V_{DD}/4) + ((CVR<3:0>)/32) \bullet (V_{DD})$

Note 1: CVROE overrides the TRIS bit setting.

© 2011 Microchip Technology Inc.

24.2 Voltage Reference Accuracy/Error

The full range of voltage reference cannot be realized due to the construction of the module. The transistors on the top and bottom of the resistor ladder network (see Figure 24-1) keep CVREF from approaching the reference source rails. The voltage reference is derived from the reference source; therefore, the CVREF output changes with fluctuations in that source. The accuracy of the voltage reference can be found in **Section 30.0 "Electrical Characteristics"**.

24.3 Connection Considerations

The voltage reference module operates independently of the comparator module. The output of the reference generator may be connected to the RA2 pin if the CVROE bit is set. Enabling the voltage reference output onto RA2 when it is configured as a digital input will increase current consumption.

The RA2 pin can be used as a simple D/A output with limited drive capability. Due to the limited current drive capability, a buffer must be used on the voltage reference output for external connections to VREF. See Figure 24-2 for an example buffering technique.

24.4 Operation During Sleep

When the device wakes up from Sleep through an interrupt or a Watchdog Timer time-out, the contents of the CVRCON register are not affected. To minimize current consumption in Sleep mode, the voltage reference should be disabled.

24.5 Effects of a Reset

A device Reset disables the voltage reference by clearing bit, CVREN (CVRCON<7>). This Reset also disconnects the reference from the RA2 pin by clearing bit, CVROE (CVRCON<6>) and selects the high-voltage range by clearing bit, CVRR (CVRCON<5>). The CVR value select bits are also cleared.

FIGURE 24-2: COMPARATOR VOLTAGE REFERENCE OUTPUT BUFFER EXAMPLE

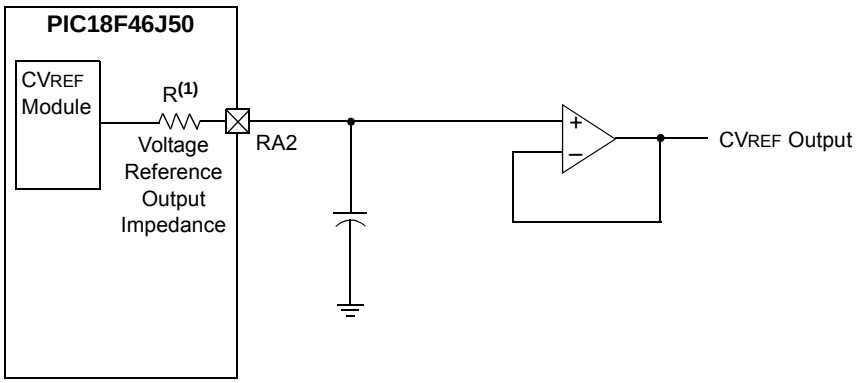

Note 1: R is dependent upon the Comparator Voltage Reference Configuration bits, CVRCON<5> and CVRCON<3:0>.

TABLE 24-1: REGISTERS ASSOCIATED WITH COMPARATOR VOLTAGE REFERENCE

Name	Bit 7	Bit 6	Bit 5	Bit 4	Bit 3	Bit 2	Bit 1	Bit 0	Reset Values on Page:
CVRCON	CVREN	CVROE	CVRR	r	CVR3	CVR2	CVR1	CVR0	74
CM1CON	CON	COE	CPOL	EVPOL1	EVPOL0	CREF	CCH1	CCH0	70
CM2CON	CON	COE	CPOL	EVPOL1	EVPOL0	CREF	CCH1	CCH0	70
TRISA	TRISA7	TRISA6	TRISA5	—	TRISA3	TRISA2	TRISA1	TRISA0	72
ANCON0	PCFG7(1)	PCFG6(1)	PCFG5(1)	PCFG4	PCFG3	PCFG2	PCFG1	PCFG0	74
ANCON1	VBGEN	r	—	PCFG12	PCFG11	PCFG10	PCFG9	PCFG8	74

Legend: — = unimplemented, read as '0', r = reserved. Shaded cells are not used with the comparator voltage reference.

Note 1: These bits are only available on 44-pin devices.

NOTES:

© 2011 Microchip Technology Inc.

25.0 HIGH/LOW VOLTAGE DETECT (HLVD)

The High/Low-Voltage Detect (HLVD) module can be used to monitor the absolute voltage on VDD or the HLVDIN pin. This is a programmable circuit that allows the user to specify both a device voltage trip point and the direction of change from that point.

If the module detects an excursion past the trip point in that direction, an interrupt flag is set. If the interrupt is enabled, the program execution will branch to the interrupt vector address and the software can then respond to the interrupt.

The High/Low-Voltage Detect Control register (Register 25-1) completely controls the operation of the HLVD module. This allows the circuitry to be "turned off" by the user under software control, which minimizes the current consumption for the device.

Figure 25-1 provides a block diagram for the HLVD module.

REGISTER 25-1: HLVDCON: HIGH/LOW-VOLTAGE DETECT CONTROL REGISTER (ACCESS F85h)

R/W-0	R-0	R-0	R/W-0	R/W-0	R/W-0	R/W-0	R/W-0
VDIRMAG	BGVST	IRVST	HLVDEN	HLVDL3(1)	HLVDL2(1)	HLVDL1(1)	HLVDL0(1)
bit 7							bit 0

Legend:			
R = Readable bit	W = Writable bit	U = Unimplemented bit, read as '0'	
-n = Value at POR	'1' = Bit is set	'0' = Bit is cleared	x = Bit is unknown

bit 7 **VDIRMAG:** Voltage Direction Magnitude Select bit
1 = Event occurs when voltage equals or exceeds trip point (HLVDL<3:0>)
0 = Event occurs when voltage equals or falls below trip point (HLVDL<3:0>)

bit 6 **BGVST:** Band Gap Reference Voltages Stable Status Flag bit
1 = Indicates internal band gap voltage references are stable
0 = Indicates internal band gap voltage references are not stable

bit 5 **IRVST:** Internal Reference Voltage Stable Flag bit
1 = Indicates that the voltage detect logic will generate the interrupt flag at the specified voltage range
0 = Indicates that the voltage detect logic will not generate the interrupt flag at the specified voltage range and the HLVD interrupt should not be enabled

bit 4 **HLVDEN:** High/Low-Voltage Detect Power Enable bit
1 = HLVD enabled
0 = HLVD disabled

bit 3-0 **HLVDL<3:0>:** Voltage Detection Limit bits(1)
1111 = External analog input is used (input comes from the HLVDIN pin)
1110 = Maximum setting
.
.
.
1000 = Minimum setting
0xxx = Reserved

Note 1: See Table 30-8 in **Section 30.0 "Electrical Characteristics"** for specifications.

The module is enabled by setting the HLVDEN bit. Each time the module is enabled, the circuitry requires some time to stabilize. The IRVST bit is a read-only bit that indicates when the circuit is stable. The module can generate an interrupt only after the circuit is stable and IRVST is set.

The VDIRMAG bit determines the overall operation of the module. When VDIRMAG is cleared, the module monitors for drops in VDD below a predetermined set point. When the bit is set, the module monitors for rises in VDD above the set point.

25.1 Operation

When the HLVD module is enabled, a comparator uses an internally generated reference voltage as the set point. The set point is compared with the trip point, where each node in the resistor divider represents a trip point voltage. The “trip point” voltage is the voltage level at which the device detects a high or low-voltage event, depending on the configuration of the module.

When the supply voltage is equal to the trip point, the voltage tapped off of the resistor array is equal to the internal reference voltage generated by the voltage reference module. The comparator then generates an interrupt signal by setting the HLVDIF bit.

The trip point voltage is software-programmable to any one of 8 values. The trip point is selected by programming the HLVDL<3:0> bits (HLVDCON<3:0>).

Additionally, the HLVD module allows the user to supply the trip voltage to the module from an external source. This mode is enabled when bits, HLVDL<3:0>, are set to ‘1111’. In this state, the comparator input is multiplexed from the external input pin, HLVDIN. This gives users flexibility because it allows them to configure the HLVD interrupt to occur at any voltage in the valid operating range.

FIGURE 25-1: HLVD MODULE BLOCK DIAGRAM (WITH EXTERNAL INPUT)

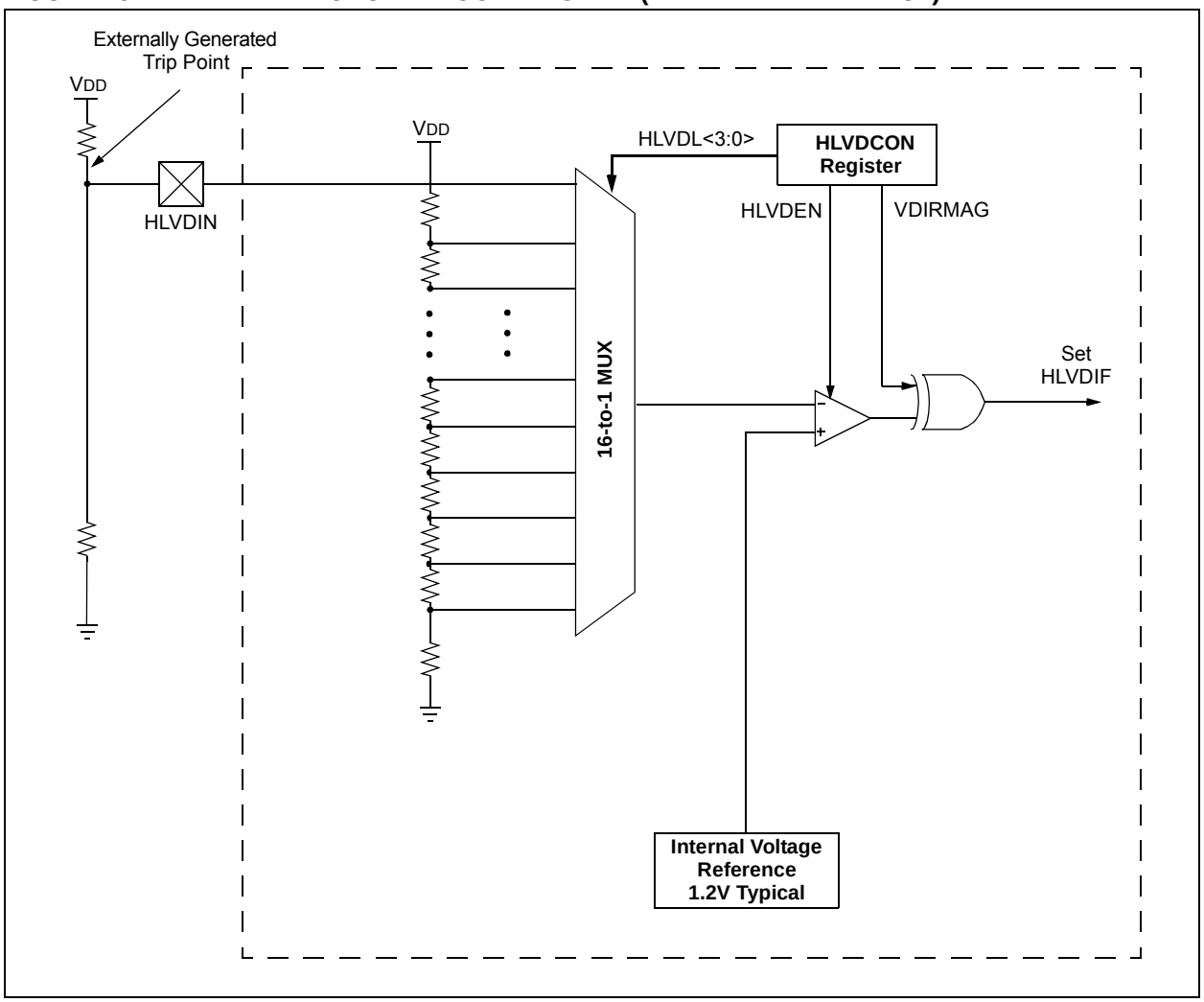

© 2011 Microchip Technology Inc.

25.2 HLVD Setup

To set up the HLVD module:

1. Disable the module by clearing the HLVDEN bit (HLVDCON<4>).
2. Write the value to the HLVDL<3:0> bits that selects the desired HLVD trip point.
3. Set the VDIRMAG bit to detect one of the following:
   - High voltage (VDIRMAG = 1)
   - Low voltage (VDIRMAG = 0)
4. Enable the HLVD module by setting the HLVDEN bit.
5. Clear the HLVD Interrupt Flag, HLVDIF (PIR2<2>), which may have been set from a previous interrupt.
6. If interrupts are desired, enable the HLVD interrupt by setting the HLVDIE and GIE/GIEH bits (PIE2<2> and INTCON<7>).

   An interrupt will not be generated until the IRVST bit is set.

25.3 Current Consumption

When the module is enabled, the HLVD comparator and voltage divider are enabled and will consume static current. The total current consumption, when enabled, is specified in electrical specification Parameter D022B (ΔI_{HLVD}) (**Section 30.2 "DC Characteristics: Power-Down and Supply Current PIC18F46J50 Family (Industrial)"**).

Depending on the application, the HLVD module does not need to operate constantly. To decrease the current requirements, the HLVD circuitry may only need to be enabled for short periods where the voltage is checked. After doing the check, the HLVD module may be disabled.

25.4 HLVD Start-up Time

The internal reference voltage of the HLVD module, specified in electrical specification Parameter D420 (see Table 30-8 in **Section 30.0 "Electrical Characteristics"**), may be used by other internal circuitry, such as the programmable Brown-out Reset (BOR).

If the HLVD, or other circuits using the voltage reference, are disabled to lower the device's current consumption, the reference voltage circuit will require time to become stable before a low or high-voltage condition can be reliably detected. This start-up time, T_{IRVST}, is an interval that is independent of device clock speed. It is specified in electrical specification Parameter 36 (Table 30-13).

The HLVD interrupt flag is not enabled until T_{IRVST} has expired and a stable reference voltage is reached. For this reason, brief excursions beyond the set point may not be detected during this interval. Refer to Figure 25-2 or Figure 25-3.

FIGURE 25-2: LOW-VOLTAGE DETECT OPERATION (VDIRMAG = 0)

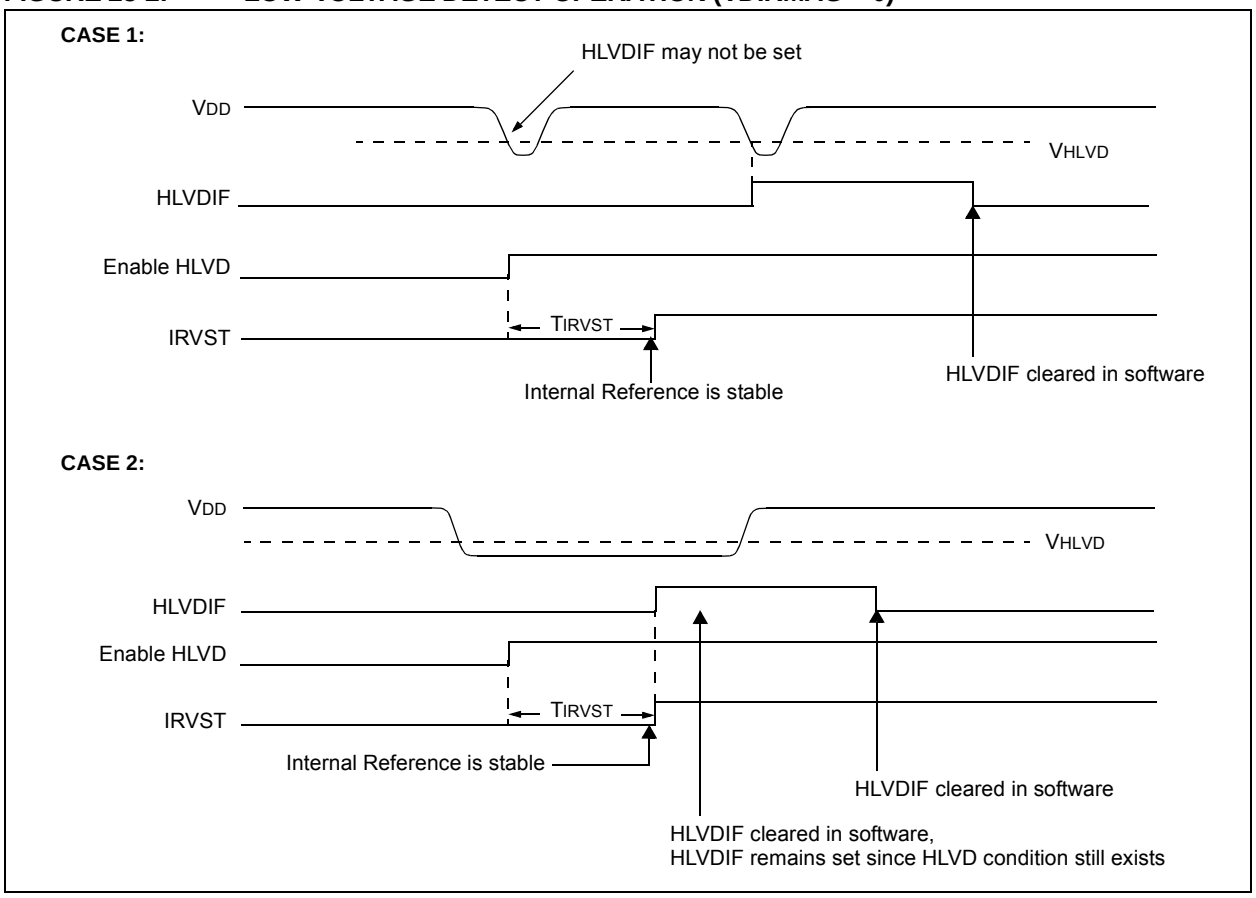

© 2011 Microchip Technology Inc.

FIGURE 25-3: HIGH-VOLTAGE DETECT OPERATION (VDIRMAG = 1)

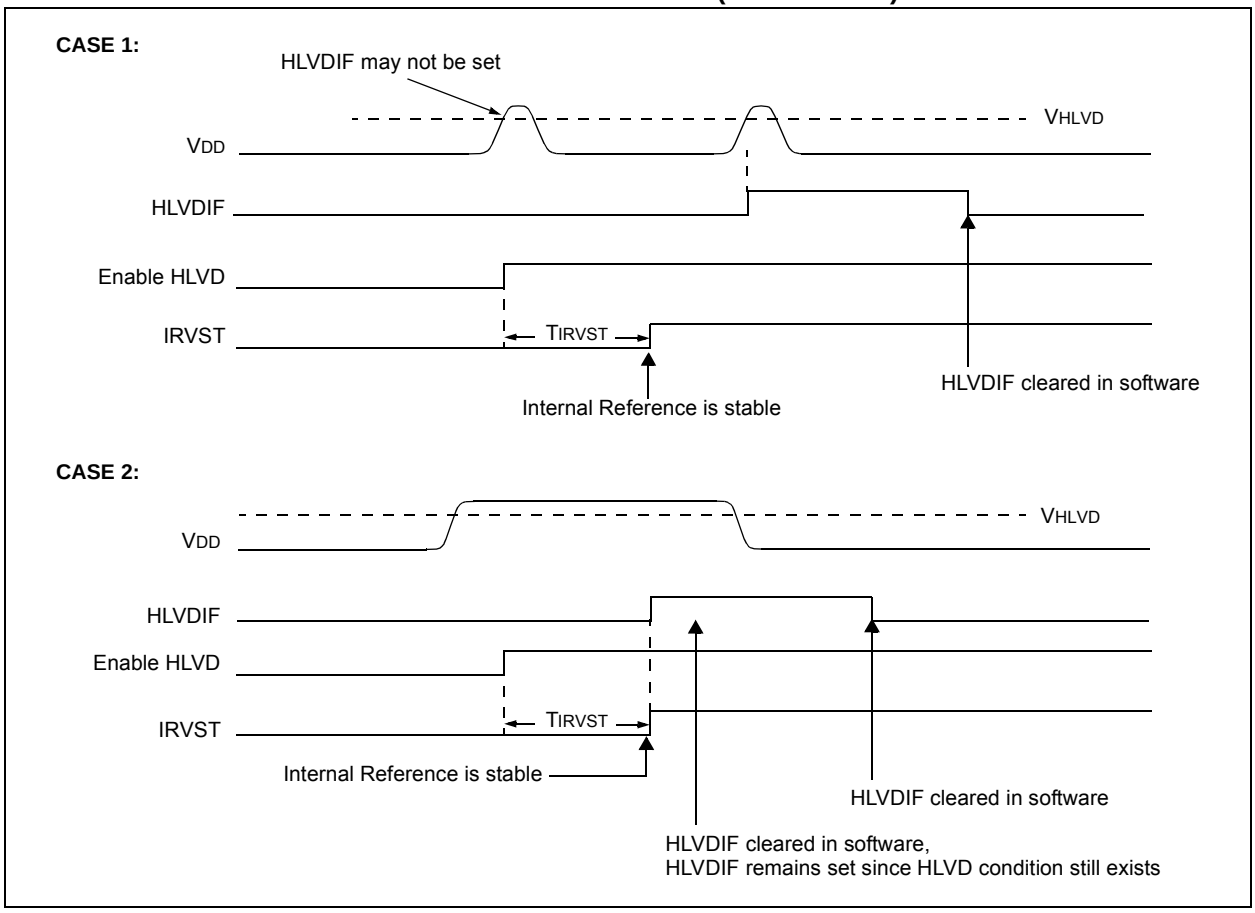

25.5 Applications

In many applications, it is desirable to have the ability to detect a drop below, or rise above, a particular threshold. For example, the HLVD module could be enabled periodically to detect Universal Serial Bus (USB) attach or detach.

For general battery applications, Figure 25-4 provides a possible voltage curve.

Over time, the device voltage decreases. When the device voltage reaches voltage, VA, the HLVD logic generates an interrupt at time, TA. The interrupt could cause the execution of an ISR, which would allow the application to perform "housekeeping tasks" and perform a controlled shutdown before the device voltage exits the valid operating range at TB.

Thus, the HLVD would give the application a time window, represented by the difference between TA and TB, to safely exit.

FIGURE 25-4: TYPICAL HIGH/ LOW-VOLTAGE DETECT APPLICATION

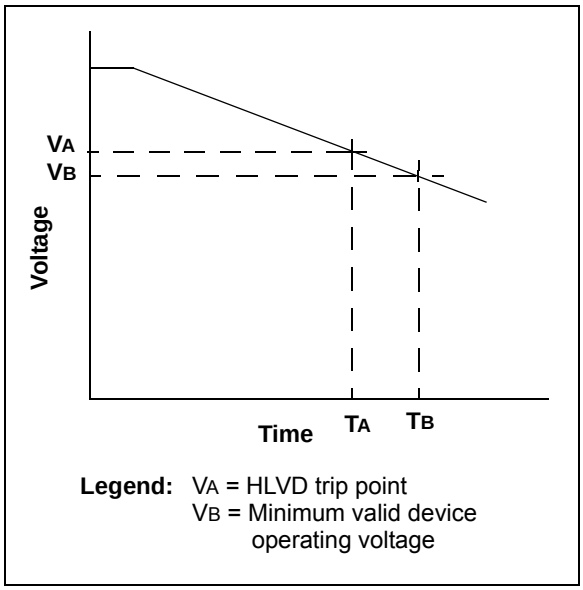

25.6 Operation During Sleep

When enabled, the HLVD circuitry continues to operate during Sleep. If the device voltage crosses the trip point, the HLVDIF bit will be set and the device will wake-up from Sleep. Device execution will continue from the interrupt vector address if interrupts have been globally enabled.

25.7 Effects of a Reset

A device Reset forces all registers to their Reset state. This forces the HLVD module to be turned off.

TABLE 25-1: REGISTERS ASSOCIATED WITH HIGH/LOW-VOLTAGE DETECT MODULE

Name	Bit 7	Bit 6	Bit 5	Bit 4	Bit 3	Bit 2	Bit 1	Bit 0	Reset Values on Page
HLVDCON	VDIRMAG	BGVST	IRVST	HLVDEN	HLVDL3	HLVDL2	HLVDL1	HLVDL0	72
INTCON	GIE/GIEH	PEIE/GIEL	TMR0IE	INT0IE	RBIE	TMR0IF	INT0IF	RBIF	69
PIR2	OSCFIF	CM2IF	CM1IF	USBIF	BCL1IF	HLVDIF	TMR3IF	CCP2IF	71
PIE2	OSCFIE	CM2IE	CM1IE	USBIE	BCL1IE	HLVDIE	TMR3IE	CCP2IE	71
IPR2	OSCFIP	CM2IP	CM1IP	USBIP	BCL1IP	HLVDIP	TMR3IP	CCP2IP	71

Legend: — = unimplemented, read as '0'. Shaded cells are unused by the HLVD module.

© 2011 Microchip Technology Inc.

26.0 CHARGE TIME MEASUREMENT UNIT (CTMU)

The Charge Time Measurement Unit (CTMU) is a flexible analog module that provides accurate differential time measurement between pulse sources, as well as asynchronous pulse generation. By working with other on-chip analog modules, the CTMU can be used to precisely measure time, measure capacitance, measure relative changes in capacitance or generate output pulses with a specific time delay. The CTMU is ideal for interfacing with capacitive-based sensors.

The module includes the following key features:

- Up to 13 channels available for capacitive or time measurement input
- On-chip precision current source
- Four-edge input trigger sources
- Polarity control for each edge source
- Control of edge sequence
- Control of response to edges
- Time measurement resolution of 1 nanosecond
- High-precision time measurement
- Time delay of external or internal signal asynchronous to system clock
- Accurate current source suitable for capacitive measurement

The CTMU works in conjunction with the A/D Converter to provide up to 13 channels for time or charge measurement, depending on the specific device and the number of A/D channels available. When configured for time delay, the CTMU is connected to one of the analog comparators. The level-sensitive input edge sources can be selected from four sources: two external inputs, Timer1 or Output Compare Module 1.

Figure 26-1 provides a block diagram of the CTMU.

FIGURE 26-1: CTMU BLOCK DIAGRAM

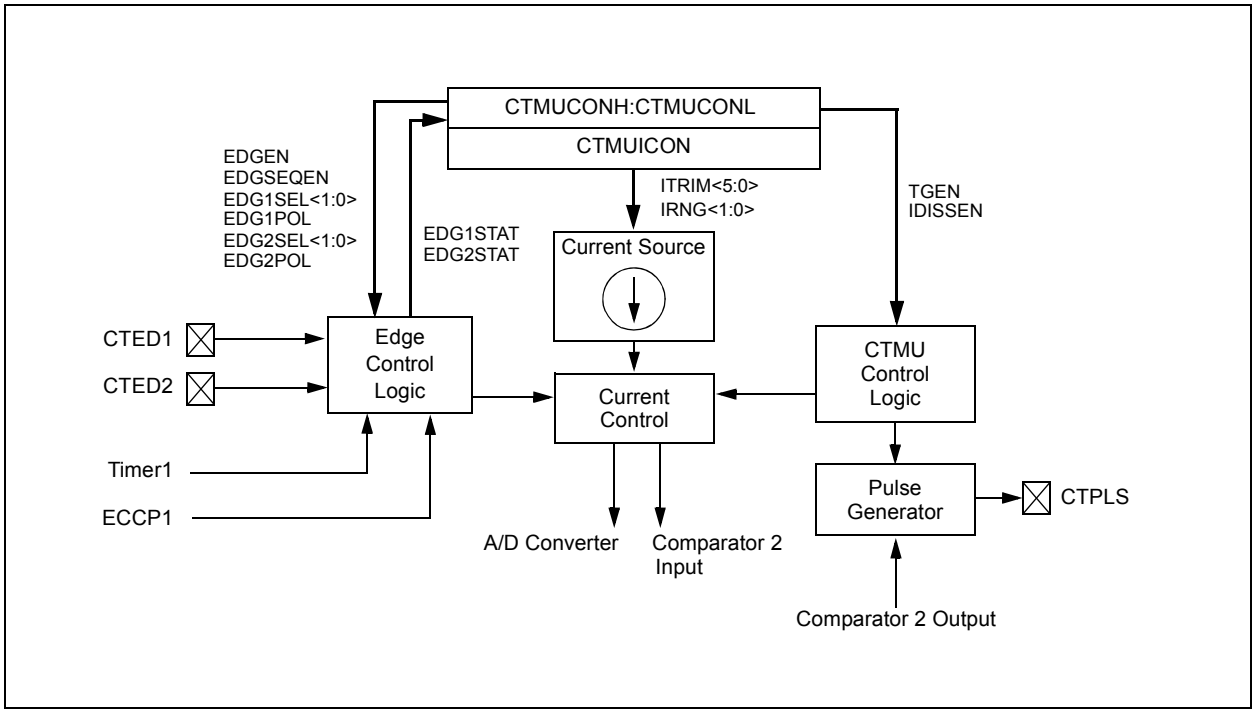

26.1 CTMU Operation

The CTMU works by using a fixed current source to charge a circuit. The type of circuit depends on the type of measurement being made. In the case of charge measurement, the current is fixed, and the amount of time the current is applied to the circuit is fixed. The amount of voltage read by the A/D is then a measurement of the capacitance of the circuit. In the case of time measurement, the current, as well as the capacitance of the circuit, is fixed. In this case, the voltage read by the A/D is then representative of the amount of time elapsed from the time the current source starts and stops charging the circuit.

If the CTMU is being used as a time delay, both capacitance and current source are fixed, as well as the voltage supplied to the comparator circuit. The delay of a signal is determined by the amount of time it takes the voltage to charge to the comparator threshold voltage.

26.1.1 THEORY OF OPERATION

The operation of the CTMU is based on this equation for charge:

$$I = C \cdot \frac{dV}{dT}$$

More simply, the amount of charge (Q), measured in coulombs in a circuit, is defined as current in amperes (I) multiplied by the amount of time in seconds that the current flows (t). Charge is also defined as the capacitance in farads (C), multiplied by the voltage of the circuit (V). It follows that:

$$I \cdot t = C \cdot V.$$

The CTMU module provides a constant, known current source. The A/D Converter is used to measure (V) in the equation, leaving two unknowns: capacitance (C) and time (t). The above equation can be used to calculate capacitance or time by either relationship using the known fixed capacitance of the circuit:

$$t = (C \cdot V)/I$$

or by:

$$C = (I \cdot t)/V$$

using a fixed time that the current source is applied to the circuit.

26.1.2 CURRENT SOURCE

At the heart of the CTMU is a precision current source, designed to provide a constant reference for measurements. The level of current is user-selectable across three ranges or a total of two orders of magnitude, with the ability to trim the output in ±2% increments (nominal). The current range is selected by the IRNG<1:0> bits (CTMUICON<1:0>), with a value of '01' representing the lowest range.

Current trim is provided by the ITRIM<5:0> bits (CTMUICON<7:2>). These six bits allow trimming of the current source in steps of approximately 2% per step. Note that half of the range adjusts the current source positively and the other half reduces the current source. A value of '000000' is the neutral position (no change). A value of '100001' is the maximum negative adjustment (approximately -62%) and '011111' is the maximum positive adjustment (approximately +62%).

26.1.3 EDGE SELECTION AND CONTROL

CTMU measurements are controlled by edge events occurring on the module's two input channels. Each channel, referred to as Edge 1 and Edge 2, can be configured to receive input pulses from one of the edge input pins (CTED1 and CTED2), Timer1 or Output Compare Module 1. The input channels are level-sensitive, responding to the instantaneous level on the channel rather than a transition between levels. The inputs are selected using the EDG1SEL and EDG2SEL bit pairs (CTMUCONL<3:2 and 6:5>).

In addition to source, each channel can be configured for event polarity using the EDGE2POL and EDGE1POL bits (CTMUCONL<7,4>). The input channels can also be filtered for an edge event sequence (Edge 1 occurring before Edge 2) by setting the EDGSEQEN bit (CTMUCONH<2>).

26.1.4 EDGE STATUS

The CTMUCONL register also contains two status bits: EDG2STAT and EDG1STAT (CTMUCONL<1:0>). Their primary function is to show if an edge response has occurred on the corresponding channel. The CTMU automatically sets a particular bit when an edge response is detected on its channel. The level-sensitive nature of the input channels also means that the status bits become set immediately if the channel's configuration is changed and is the same as the channel's current state.

The module uses the edge status bits to control the current source output to external analog modules (such as the A/D Converter). Current is only supplied to external modules when only one (but not both) of the status bits is set, and shuts current off when both bits are either set or cleared. This allows the CTMU to measure current only during the interval between edges. After both status bits are set, it is necessary to clear them before another measurement is taken. Both bits should be cleared simultaneously, if possible, to avoid re-enabling the CTMU current source.

In addition to being set by the CTMU hardware, the edge status bits can also be set by software. This is also the user's application to manually enable or disable the current source. Setting either one (but not both) of the bits enables the current source. Setting or clearing both bits at once disables the source.

© 2011 Microchip Technology Inc.

26.1.5 INTERRUPTS

The CTMU sets its interrupt flag (PIR3<2>) whenever the current source is enabled, then disabled. An interrupt is generated only if the corresponding interrupt enable bit (PIE3<2>) is also set. If edge sequencing is not enabled (i.e., Edge 1 must occur before Edge 2), it is necessary to monitor the edge status bits and determine which edge occurred last and caused the interrupt.

26.2 CTMU Module Initialization

The following sequence is a general guideline used to initialize the CTMU module:

1. Select the current source range using the IRNG bits (CTMUICON<1:0>).
2. Adjust the current source trim using the ITRIM bits (CTMUICON<7:2>).
3. Configure the edge input sources for Edge 1 and Edge 2 by setting the EDG1SEL and EDG2SEL bits (CTMUCONL<3:2 and 6:5>).
4. Configure the input polarities for the edge inputs using the EDG1POL and EDG2POL bits (CTMUCONL<4,7>). The default configuration is for negative edge polarity (high-to-low transitions).
5. Enable edge sequencing using the EDGSEQEN bit (CTMUCONH<2>). By default, edge sequencing is disabled.
6. Select the operating mode (Measurement or Time Delay) with the TGEN bit (CTMUCONH<4>). The default mode is Time/Capacitance Measurement.
7. Discharge the connected circuit by setting the IDISSEN bit (CTMUCONH<1>); after waiting a sufficient time for the circuit to discharge, clear IDISSEN.
8. Disable the module by clearing the CTMUEN bit (CTMUCONH<7>).
9. Enable the module by setting the CTMUEN bit.
10. Clear the Edge Status bits: EDG2STAT and EDG1STAT (CTMUCONL<1:0>). Both bits should be cleared simultaneously, if possible, to avoid re-enabling the CTMU current source.
11. Enable both edge inputs by setting the EDGEN bit (CTMUCONH<3>).

Depending on the type of measurement or pulse generation being performed, one or more additional modules may also need to be initialized and configured with the CTMU module:

- Edge Source Generation: In addition to the external edge input pins, both Timer1 and the Output Compare/PWM1 module can be used as edge sources for the CTMU.
- Capacitance or Time Measurement: The CTMU module uses the A/D Converter to measure the voltage across a capacitor that is connected to one of the analog input channels.
- Pulse Generation: When generating system clock independent output pulses, the CTMU module uses Comparator 2 and the associated comparator voltage reference.

26.3 Calibrating the CTMU Module

The CTMU requires calibration for precise measurements of capacitance and time, as well as for accurate time delay. If the application only requires measurement of a relative change in capacitance or time, calibration is usually not necessary. An example of this type of application would include a capacitive touch switch, in which the touch circuit has a baseline capacitance, and the added capacitance of the human body changes the overall capacitance of a circuit.

If actual capacitance or time measurement is required, two hardware calibrations must take place: the current source needs calibration to set it to a precise current, and the circuit being measured needs calibration to measure and/or nullify all other capacitance other than that to be measured.

26.3.1 CURRENT SOURCE CALIBRATION

The current source on board the CTMU module has a range of ±62% nominal for each of three current ranges. Therefore, for precise measurements, it is possible to measure and adjust this current source by placing a high-precision resistor, RCAL, onto an unused analog channel. An example circuit is shown in Figure 26-2. The current source measurement is performed using the following steps:

1. Initialize the A/D Converter.
2. Initialize the CTMU.
3. Enable the current source by setting EDG1STAT (CTMUCONL<0>).
4. Issue a time delay for voltage across R_{CAL} to stabilize and the ADC sample/hold capacitor to charge.
5. Perform A/D conversion.
6. Calculate the effective source current using $I = V/R_{CAL}$, where R_{CAL} is a high-precision resistance and V is measured by performing an A/D conversion.

The CTMU current source may be trimmed with the trim bits in CTMUICON, using an iterative process to get an exact desired current. Alternatively, the nominal value without adjustment may be used; it may be stored by the software for use in all subsequent capacitive or time measurements.

To calculate the optimal value for R_{CAL}, the nominal current must be chosen. For example, if the A/D Converter reference voltage is 3.3V, use 70% of full scale, or 2.31V as the desired approximate voltage to be read by the A/D Converter. If the range of the CTMU current source is selected to be 0.55 μA, the resistor value needed is calculated as $R_{CAL} = 2.31V/0.55\ \mu A$, for a value of 4.2 MΩ. Similarly, if the current source is chosen to be 5.5 μA, R_{CAL} would be 420,000Ω and 42,000Ω if the current source is set to 55 μA.

FIGURE 26-2: CTMU CURRENT SOURCE CALIBRATION CIRCUIT

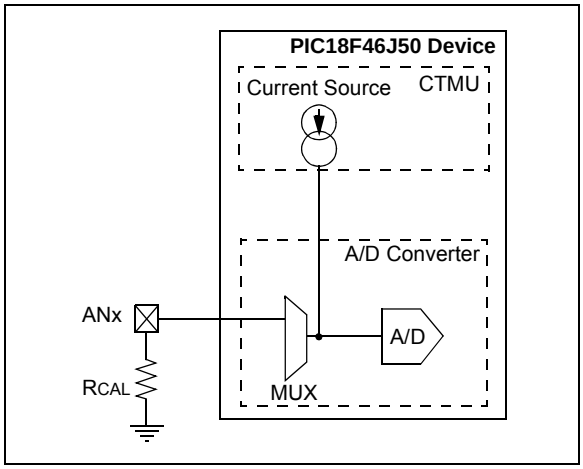

A value of 70% of full-scale voltage is chosen to make sure that the A/D Converter is in a range that is well above the noise floor. Keep in mind that if an exact current is chosen that is to incorporate the trimming bits from CTMUICON, the resistor value of R_{CAL} may need to be adjusted accordingly. R_{CAL} may also be adjusted to allow for available resistor values. R_{CAL} should be of the highest precision available, keeping in mind the amount of precision needed for the circuit that the CTMU will be used to measure. A recommended minimum would be 0.1% tolerance.

The following examples show one typical method for performing a CTMU current calibration. Example 26-1 demonstrates how to initialize the A/D Converter and the CTMU. This routine is typical for applications using both modules. Example 26-2 demonstrates one method for the actual calibration routine.

© 2011 Microchip Technology Inc.

EXAMPLE 26-1: SETUP FOR CTMU CALIBRATION ROUTINES

```
#include <p18cxxx.h>
/*****************************************************************************/
/*Setup CTMU ****************************************************************/
/*****************************************************************************/
void setup(void)

{ //CTMUCON - CTMU Control register

    CTMUCONH = 0x00;              //make sure CTMU is disabled
    CTMUCONL = 0x90;
    //CTMU continues to run when emulator is stopped,CTMU continues
    //to run in idle mode,Time Generation mode disabled, Edges are blocked
    //No edge sequence order, Analog current source not grounded
    //Edge2 polarity = positive level, Edge2 source =
    //source 0, Edge1 polarity = positive level, Edge1 source = source 0,


    //CTMUICON - CTMU Current Control Register
    CTMUICON = 0x01;              //0.55uA, Nominal - No Adjustment

/*****************************************************************************/
//Setup AD converter;
/*****************************************************************************/

    TRISA=0x04;                   //set channel 2 as an input

    // Configured AN2 as an analog channel
    // ANCON0
    ANCON0 = 0xFB;
    // ANCON1
    ANCON1 = 0x1F;

    // ADCON1
    ADCON1bits.ADFM=1;            // Result format 1= Right justified
    ADCON1bits.ADCAL=0;           // Normal A/D conversion operation
    ADCON1bits.ACQT=1;            // Acquisition time 7 = 20TAD 2 = 4TAD 1=2TAD
    ADCON1bits.ADCS=2;            // Clock conversion bits 6= FOSC/64 2=FOSC/32


    ANCON1bits.VBGEN=1;           // Turn on the Bandgap (if not already on)

    // ADCON0
    ADCON0bits.VCFG0 =0;          // Vref+ = AVdd
    ADCON0bits.VCFG1 =0;          // Vref- = AVss
    ADCON0bits.CHS=2;             // Select ADC channel

    ADCON0bits.ADON=1;            // Turn on ADC

}
```

EXAMPLE 26-2: CURRENT CALIBRATION ROUTINE

```
#include <p18cxxx.h>

#define COUNT 500                           //@ 8MHz = 125uS.
#define DELAY for(i=0;i<COUNT;i++)
#define RCAL .027                           //R value is 4200000 (4.2M)
                                            //scaled so that result is in
                                            //1/100th of uA
#define ADSCALE 1023                        //for unsigned conversion 10 sig bits
#define ADREF 3.3                           //Vdd connected to A/D Vr+

void main(void)
{
    int i;
    int j = 0;                               //index for loop
    unsigned int Vread = 0;
    double VTot = 0;
    float Vavg=0, Vcal=0, CTMUISrc = 0;      //float values stored for calcs

    //assume CTMU and A/D have been setup correctly
    //see Example 25-1 for CTMU & A/D setup
    setup();

    CTMUCONHbits.CTMUEN = 1;                 //Enable the CTMU
    CTMUCONLbits.EDG1STAT = 0;               //Set Edge status bits to zero
    CTMUCONLbits.EDG2STAT = 0;
    for(j=0;j<10;j++)
    {
        CTMUCONHbits.IDISSEN = 1;            //drain charge on the circuit
        DELAY;                               //wait 125us
        CTMUCONHbits.IDISSEN = 0;            //end drain of circuit

        CTMUCONLbits.EDG1STAT = 1;           //Begin charging the circuit
                                             //using CTMU current source
        DELAY;                               //wait for 125us
        CTMUCONLbits.EDG1STAT = 0;           //Stop charging circuit

        PIR1bits.ADIF = 0;                   //make sure A/D Int not set
        ADCON0bits.GO=1;                     //and begin A/D conv.
        while(!PIR1bits.ADIF);               //Wait for A/D convert complete

        Vread = ADRES;                       //Get the value from the A/D
        PIR1bits.ADIF = 0;                   //Clear A/D Interrupt Flag
        VTot += Vread;                       //Add the reading to the total
    }

    Vavg = (float)(VTot/10.000);             //Average of 10 readings
    Vcal = (float)(Vavg/ADSCALE*ADREF);
    CTMUISrc = Vcal/RCAL;                    //CTMUISrc is in 1/100ths of uA

}
```


© 2011 Microchip Technology Inc.

26.3.2 CAPACITANCE CALIBRATION

There is a small amount of capacitance from the internal A/D Converter sample capacitor as well as stray capacitance from the circuit board traces and pads that affect the precision of capacitance measurements. A measurement of the stray capacitance can be taken by making sure the desired capacitance to be measured has been removed. The measurement is then performed using the following steps:

1. Initialize the A/D Converter and the CTMU.
2. Set EDG1STAT (= 1).
3. Wait for a fixed delay of time, t.
4. Clear EDG1STAT.
5. Perform an A/D conversion.
6. Calculate the stray and A/D sample capacitances:

$$C_{OFFSET} = C_{STRAY} + C_{AD} = (I \cdot t)/V$$

where I is known from the current source measurement step, t is a fixed delay and V is measured by performing an A/D conversion.

This measured value is then stored and used for calculations of time measurement or subtracted for capacitance measurement. For calibration, it is expected that the capacitance of $C_{STRAY} + C_{AD}$ is approximately known; C_{AD} is approximately 4 pF.

An iterative process may need to be used to adjust the time, t, that the circuit is charged to obtain a reasonable voltage reading from the A/D Converter. The value of t may be determined by setting C_{OFFSET} to a theoretical value, then solving for t. For example, if C_{STRAY} is theoretically calculated to be 11 pF, and V is expected to be 70% of V_{DD}, or 2.31V, then t would be

$$(4\ pF + 11\ pF) \bullet 2.31V/0.55\ mA$$

or 63 μs.

See Example 26-3 for a typical routine for CTMU capacitance calibration.

EXAMPLE 26-3: CAPACITANCE CALIBRATION ROUTINE

```
#include <p18cxxx.h>

#define COUNT 25                            //@ 8MHz INTFRC = 62.5 us.
#define ETIME COUNT*2.5                     //time in uS
#define DELAY for(i=0;i<COUNT;i++)
#define ADSCALE 1023                        //for unsigned conversion 10 sig bits
#define ADREF 3.3                           //Vdd connected to A/D Vr+
#define RCAL .027                           //R value is 4200000 (4.2M)
                                            //scaled so that result is in
                                            //1/100th of uA

void main(void)
{
    int i;
    int j = 0;                              //index for loop
    unsigned int Vread = 0;
    float CTMUISrc, CTMUCap, Vavg, VTot, Vcal;

    //assume CTMU and A/D have been setup correctly
    //see Example 25-1 for CTMU & A/D setup
    setup();

    CTMUCONHbits.CTMUEN = 1;                // Enable the CTMU
    CTMUCONLbits.EDG1STAT = 0;              // Set Edge status bits to zero
    CTMUCONLbits.EDG2STAT = 0;
    for(j=0;j<10;j++)
    {
        CTMUCONHbits.IDISSEN = 1;           //drain charge on the circuit
        DELAY;                              //wait 125us
        CTMUCONHbits.IDISSEN = 0;           //end drain of circuit

        CTMUCONLbits.EDG1STAT = 1;          //Begin charging the circuit
                                            //using CTMU current source
        DELAY;                              //wait for 125us
        CTMUCONLbits.EDG1STAT = 0;          //Stop charging circuit

        PIR1bits.ADIF = 0;                  //make sure A/D Int not set
        ADCON0bits.GO=1;                    //and begin A/D conv.
        while(!PIR1bits.ADIF);              //Wait for A/D convert complete


        Vread = ADRES;                      //Get the value from the A/D
        PIR1bits.ADIF = 0;                  //Clear A/D Interrupt Flag
        VTot += Vread;                      //Add the reading to the total
    }

    Vavg = (float)(VTot/10.000);            //Average of 10 readings
    Vcal = (float)(Vavg/ADSCALE*ADREF);
    CTMUISrc = Vcal/RCAL;                   //CTMUISrc is in 1/100ths of uA
    CTMUCap = (CTMUISrc*ETIME/Vcal)/100;
}
```


© 2011 Microchip Technology Inc.

26.4 Measuring Capacitance with the CTMU

There are two separate methods of measuring capacitance with the CTMU. The first is the absolute method, in which the actual capacitance value is desired. The second is the relative method, in which the actual capacitance is not needed, rather an indication of a change in capacitance is required.

26.4.1 ABSOLUTE CAPACITANCE MEASUREMENT

For absolute capacitance measurements, both the current and capacitance calibration steps found in **Section 26.3 "Calibrating the CTMU Module"** should be followed. Capacitance measurements are then performed using the following steps:

1. Initialize the A/D Converter.
2. Initialize the CTMU.
3. Set EDG1STAT.
4. Wait for a fixed delay, T.
5. Clear EDG1STAT.
6. Perform an A/D conversion.
7. Calculate the total capacitance, $C_{TOTAL} = (I * T)/V$, where I is known from the current source measurement step (see **Section 26.3.1 "Current Source Calibration"**), T is a fixed delay and V is measured by performing an A/D conversion.
8. Subtract the stray and A/D capacitance (C_{OFFSET} from **Section 26.3.2 "Capacitance Calibration"**) from C_{TOTAL} to determine the measured capacitance.

26.4.2 RELATIVE CHARGE MEASUREMENT

An application may not require precise capacitance measurements. For example, when detecting a valid press of a capacitance-based switch, detecting a relative change of capacitance is of interest. In this type of application, when the switch is open (or not touched), the total capacitance is the capacitance of the combination of the board traces, the A/D Converter, etc. A larger voltage will be measured by the A/D Converter. When the switch is closed (or is touched), the total capacitance is larger due to the addition of the capacitance of the human body to the above listed capacitances, and a smaller voltage will be measured by the A/D Converter.

Detecting capacitance changes is easily accomplished with the CTMU using these steps:

1. Initialize the A/D Converter and the CTMU.
2. Set EDG1STAT.
3. Wait for a fixed delay.
4. Clear EDG1STAT.
5. Perform an A/D conversion.

The voltage measured by performing the A/D conversion is an indication of the relative capacitance. Note that in this case, no calibration of the current source or circuit capacitance measurement is needed. See Example 26-4 for a sample software routine for a capacitive touch switch.

EXAMPLE 26-4: ROUTINE FOR CAPACITIVE TOUCH SWITCH

```
#include <p18cxxx.h>

#define COUNT 500                       //@ 8MHz = 125uS.
#define DELAY for(i=0;i<COUNT;i++)
#define OPENSW 1000                     //Un-pressed switch value
#define TRIP 300                        //Difference between pressed
                                        //and un-pressed switch
#define HYST 65                         //amount to change
                                        //from pressed to un-pressed
#define PRESSED 1
#define UNPRESSED 0

void main(void)
{
    unsigned int Vread;                 //storage for reading
    unsigned int switchState;
    int i;

    //assume CTMU and A/D have been setup correctly
    //see Example 25-1 for CTMU & A/D setup
    setup();

    CTMUCONHbits.CTMUEN = 1;            // Enable the CTMU
    CTMUCONLbits.EDG1STAT = 0;          // Set Edge status bits to zero
    CTMUCONLbits.EDG2STAT = 0;

    CTMUCONHbits.IDISSEN = 1;           //drain charge on the circuit
    DELAY;                              //wait 125us
    CTMUCONHbits.IDISSEN = 0;           //end drain of circuit

    CTMUCONLbits.EDG1STAT = 1;          //Begin charging the circuit
                                        //using CTMU current source
    DELAY;                              //wait for 125us
    CTMUCONLbits.EDG1STAT = 0;          //Stop charging circuit

    PIR1bits.ADIF = 0;                  //make sure A/D Int not set
    ADCON0bits.GO=1;                    //and begin A/D conv.
    while(!PIR1bits.ADIF);              //Wait for A/D convert complete

    Vread = ADRES;                      //Get the value from the A/D

    if(Vread < OPENSW - TRIP)
    {
        switchState = PRESSED;
    }
    else if(Vread > OPENSW - TRIP + HYST)
    {
        switchState = UNPRESSED;
    }
}
```


© 2011 Microchip Technology Inc.

26.5 Measuring Time with the CTMU Module

Time can be precisely measured after the ratio (C/I) is measured from the current and capacitance calibration step by following these steps:

1. Initialize the A/D Converter and the CTMU.
2. Set EDG1STAT.
3. Set EDG2STAT.
4. Perform an A/D conversion.
5. Calculate the time between edges as $T = (C/I) * V$, where I is calculated in the current calibration step (**Section 26.3.1 "Current Source Calibration"**), C is calculated in the capacitance calibration step (**Section 26.3.2 "Capacitance Calibration"**) and V is measured by performing the A/D conversion.

It is assumed that the time measured is small enough that the capacitance, C_{AD} + C_{EXT}, provides a valid voltage to the A/D Converter. For the smallest time measurement, always set the A/D Channel Select register (AD1CHS) to an unused A/D channel; the corresponding pin which is not connected to any circuit board trace. This minimizes added stray capacitance, keeping the total circuit capacitance close to that of the A/D Converter itself. To measure longer time intervals, an external capacitor may be connected to an A/D channel and this channel selected when making a time measurement.

FIGURE 26-3: TYPICAL CONNECTIONS AND INTERNAL CONFIGURATION FOR TIME MEASUREMENT

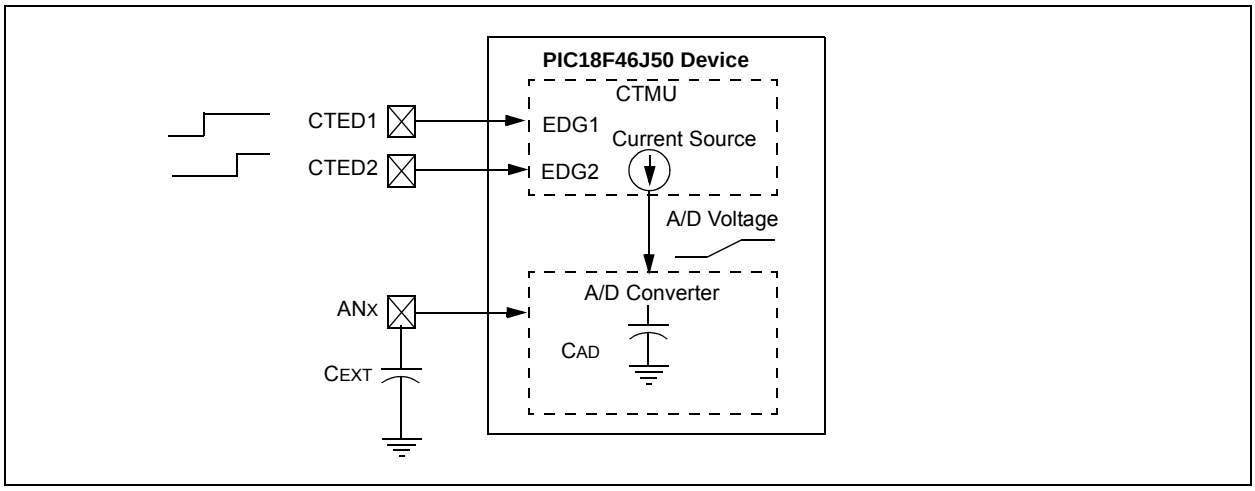

26.6 Creating a Delay with the CTMU Module

A unique feature on board the CTMU module is its ability to generate system clock independent output pulses, based on an external capacitor value. This is accomplished using the internal comparator voltage reference module, Comparator 2 input pin and an external capacitor. The pulse is output onto the CTPLS pin. To enable this mode, set the TGEN bit.

See Figure 26-4 for an example circuit. C_{PULSE} is chosen by the user to determine the output pulse width on CTPLS. The pulse width is calculated by $T = (C_{PULSE}/I) * V$, where I is known from the current source measurement step (**Section 26.3.1 "Current Source Calibration"**) and V is the internal reference voltage (CVREF).

An example use of this feature is for interfacing with variable capacitive-based sensors, such as a humidity sensor. As the humidity varies, the pulse width output on CTPLS will vary. The CTPLS output pin can be connected to an input capture pin and the varying pulse width is measured to determine the humidity in the application.

Follow these steps to use this feature:

1. Initialize Comparator 2 (with CPOL = 1).
2. Initialize the comparator voltage reference.
3. Initialize the CTMU and enable time delay generation by setting the TGEN bit.
4. Set EDG1STAT.
5. When C_{PULSE} charges to the value of the voltage reference trip point, an output pulse is generated on CTPLS.

FIGURE 26-4: TYPICAL CONNECTIONS AND INTERNAL CONFIGURATION FOR PULSE DELAY GENERATION

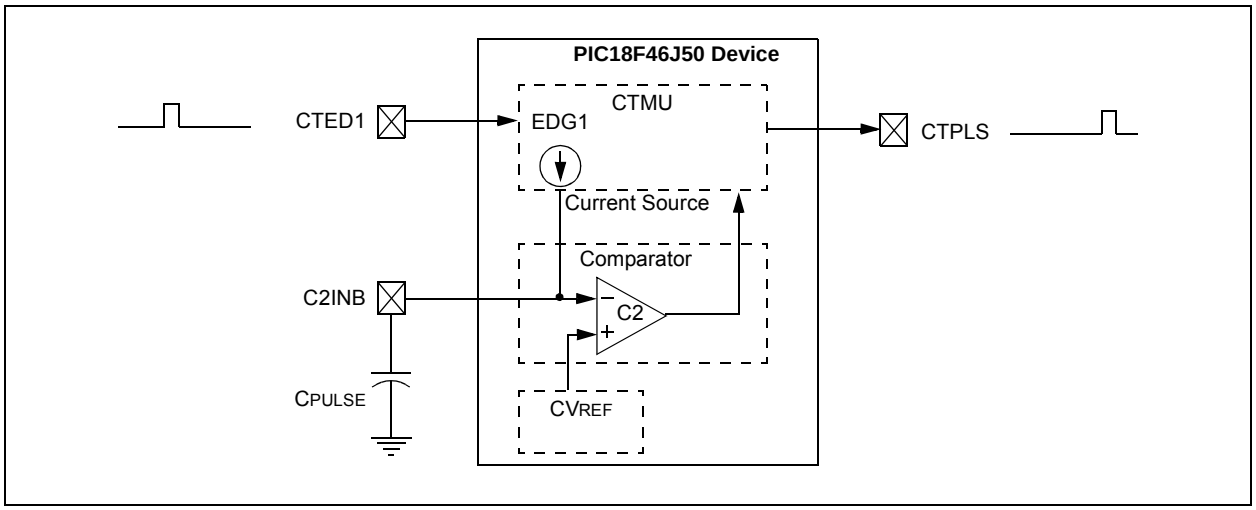

26.7 Operation During Sleep/Idle Modes

26.7.1 SLEEP MODE AND DEEP SLEEP MODES

When the device enters any Sleep mode, the CTMU module current source is always disabled. If the CTMU is performing an operation that depends on the current source when Sleep mode is invoked, the operation may not terminate correctly. Capacitance and time measurements may return erroneous values.

26.7.2 IDLE MODE

The behavior of the CTMU in Idle mode is determined by the CTMUSIDL bit (CTMUCONH<5>). If CTMUSIDL is cleared, the module will continue to operate in Idle mode. If CTMUSIDL is set, the module's current source is disabled when the device enters Idle mode. If the module is performing an operation when Idle mode is invoked, in this case, the results will be similar to those with Sleep mode.

26.8 Effects of a Reset on CTMU

Upon Reset, all registers of the CTMU are cleared. This leaves the CTMU module disabled, its current source is turned off and all configuration options return to their default settings. The module needs to be re-initialized following any Reset.

If the CTMU is in the process of taking a measurement at the time of Reset, the measurement will be lost. A partial charge may exist on the circuit that was being measured, and should be properly discharged before the CTMU makes subsequent attempts to make a measurement. The circuit is discharged by setting and then clearing the IDISSEN bit (CTMUCONH<1>) while the A/D Converter is connected to the appropriate channel.

© 2011 Microchip Technology Inc.

26.9 Registers

There are three control registers for the CTMU:

- CTMUCONH
- CTMUCONL
- CTMUICON

The CTMUCONH and CTMUCONL registers (Register 26-1 and Register 26-2) contain control bits for configuring the CTMU module edge source selection, edge source polarity selection, edge sequencing, A/D trigger, analog circuit capacitor discharge and enables. The CTMUICON register (Register 26-3) has bits for selecting the current source range and current source trim.

REGISTER 26-1: CTMUCONH: CTMU CONTROL REGISTER HIGH (ACCESS FB3h)

R/W-0	U-0	R/W-0	R/W-0	R/W-0	R/W-0	R/W-0	U-0
CTMUEN	—	CTMUSIDL	TGEN	EDGEN	EDGSEQEN	IDISSEN	r
bit 7							bit 0

Legend:	r = Reserved bit		
R = Readable bit	W = Writable bit	U = Unimplemented bit, read as ‘0’	
-n = Value at POR	‘1’ = Bit is set	‘0’ = Bit is cleared	x = Bit is unknown

bit 7 **CTMUEN:** CTMU Enable bit
1 = Module is enabled
0 = Module is disabled

bit 6 **Unimplemented:** Read as ‘0’

bit 5 **CTMUSIDL:** Stop in Idle Mode bit
1 = Discontinue module operation when device enters Idle mode
0 = Continue module operation in Idle mode

bit 4 **TGEN:** Time Generation Enable bit
1 = Enables edge delay generation
0 = Disables edge delay generation

bit 3 **EDGEN:** Edge Enable bit
1 = Edges are not blocked
0 = Edges are blocked

bit 2 **EDGSEQEN:** Edge Sequence Enable bit
1 = Edge 1 event must occur before Edge 2 event can occur
0 = No edge sequence is needed

bit 1 **IDISSEN:** Analog Current Source Control bit
1 = Analog current source output is grounded
0 = Analog current source output is not grounded

bit 0 **Reserved:** Write as ‘0’

REGISTER 26-2: CTMUCONL: CTMU CONTROL REGISTER LOW (ACCESS FB2h)

R/W-0	R/W-0	R/W-0	R/W-0	R/W-0	R/W-0	R/W-x	R/W-x
EDG2POL	EDG2SEL1	EDG2SEL0	EDG1POL	EDG1SEL1	EDG1SEL0	EDG2STAT	EDG1STAT
bit 7							bit 0

Legend:			
R = Readable bit	W = Writable bit	U = Unimplemented bit, read as '0'	
-n = Value at POR	'1' = Bit is set	'0' = Bit is cleared	x = Bit is unknown

bit 7 **EDG2POL:** Edge 2 Polarity Select bit
1 = Edge 2 is programmed for a positive edge response
0 = Edge 2 is programmed for a negative edge response

bit 6-5 **EDG2SEL<1:0>:** Edge 2 Source Select bits
11 = CTED1 pin
10 = CTED2 pin
01 = ECCP1 Output Compare module
00 = Timer1 module

bit 4 **EDG1POL:** Edge 1 Polarity Select bit
1 = Edge 1 is programmed for a positive edge response
0 = Edge 1 is programmed for a negative edge response

bit 3-2 **EDG1SEL<1:0>:** Edge 1 Source Select bits
11 = CTED1 pin
10 = CTED2 pin
01 = ECCP1 Output Compare module
00 = Timer1 module

bit 1 **EDG2STAT:** Edge 2 Status bit
1 = Edge 2 event has occurred
0 = Edge 2 event has not occurred

bit 0 **EDG1STAT:** Edge 1 Status bit
1 = Edge 1 event has occurred
0 = Edge 1 event has not occurred

© 2011 Microchip Technology Inc.

REGISTER 26-3: CTMUICON: CTMU CURRENT CONTROL REGISTER (ACCESS FB1h)

R/W-0	R/W-0	R/W-0	R/W-0	R/W-0	R/W-0	R/W-0	R/W-0
ITRIM5	ITRIM4	ITRIM3	ITRIM2	ITRIM1	ITRIM0	IRNG1	IRNG0
bit 7							bit 0

Legend:			
R = Readable bit	W = Writable bit	U = Unimplemented bit, read as '0'	
-n = Value at POR	'1' = Bit is set	'0' = Bit is cleared	x = Bit is unknown

bit 7-2 **ITRIM<5:0>:** Current Source Trim bits

011111 = Maximum positive change from nominal current
011110
.
.
.
000001 = Minimum positive change from nominal current
000000 = Nominal current output specified by IRNG<1:0>
111111 = Minimum negative change from nominal current
.
.
.
100010
100001 = Maximum negative change from nominal current

bit 1-0 **IRNG<1:0>:** Current Source Range Select bits

11 = 100 × Base current
10 = 10 × Base current
01 = Base current level (0.55 μA nominal)
00 = Current source disabled

TABLE 26-1: REGISTERS ASSOCIATED WITH CTMU MODULE

Name	Bit 7	Bit 6	Bit 5	Bit 4	Bit 3	Bit 2	Bit 1	Bit 0	Reset Values on Page:
CTMUCONH	CTMUEN	—	CTMUSIDL	TGEN	EDGEN	EDGSEQEN	IDISSEN	r	71
CTMUCONL	EDG2POL	EDG2SEL1	EDG2SEL0	EDG1POL	EDG1SEL1	EDG1SEL0	EDG2STAT	EDG1STAT	71
CTMUICON	ITRIM5	ITRIM4	ITRIM3	ITRIM2	ITRIM1	ITRIM0	IRNG1	IRNG0	71

Legend: — = unimplemented, read as '0', r = reserved bit. Shaded cells are not used during ECCP operation.

NOTES:

© 2011 Microchip Technology Inc.

27.0 SPECIAL FEATURES OF THE CPU

PIC18F46J50 family devices include several features intended to maximize reliability and minimize cost through elimination of external components. These are:

- Oscillator Selection
- Resets:
  - Power-on Reset (POR)
  - Power-up Timer (PWRT)
  - Oscillator Start-up Timer (OST)
  - Brown-out Reset (BOR)
- Interrupts
- Watchdog Timer (WDT)
- Fail-Safe Clock Monitor (FSCM)
- Two-Speed Start-up
- Code Protection
- In-Circuit Serial Programming (ICSP)

The oscillator can be configured for the application depending on frequency, power, accuracy and cost. All of the options are discussed in detail in **Section 3.0 "Oscillator Configurations"**.

A complete discussion of device Resets and interrupts is available in previous sections of this data sheet. In addition to their Power-up and Oscillator Start-up Timers provided for Resets, the PIC18F46J50 family of devices has a configurable Watchdog Timer (WDT), which is controlled in software.

The inclusion of an internal RC oscillator also provides the additional benefits of a Fail-Safe Clock Monitor (FSCM) and Two-Speed Start-up. FSCM provides for background monitoring of the peripheral clock and automatic switchover in the event of its failure. Two-Speed Start-up enables code to be executed almost immediately on start-up, while the primary clock source completes its start-up delays.

All of these features are enabled and configured by setting the appropriate Configuration register bits.

27.1 Configuration Bits

The Configuration bits can be programmed to select various device configurations. The configuration data is stored in the last four words of Flash program memory; Figure 6-1 depicts this. The configuration data gets loaded into the volatile Configuration registers, CONFIG1L through CONFIG4H, which are readable and mapped to program memory starting at location, 300000h.

Table 27-2 provides a complete list. A detailed explanation of the various bit functions is provided in Register 27-1 through Register 27-6.

27.1.1 CONSIDERATIONS FOR CONFIGURING THE PIC18F46J50 FAMILY DEVICES

Unlike some previous PIC18 microcontrollers, devices of the PIC18F46J50 family do not use persistent memory registers to store configuration information. The Configuration registers, CONFIG1L through CONFIG4H, are implemented as volatile memory.

Immediately after power-up, or after a device Reset, the microcontroller hardware automatically loads the CONFIG1L through CONFIG4L registers with configuration data stored in nonvolatile Flash program memory. The last four words of Flash program memory, known as the Flash Configuration Words (FCW), are used to store the configuration data.

Table 27-1 provides the Flash program memory, which will be loaded into the corresponding Configuration register.

When creating applications for these devices, users should always specifically allocate the location of the FCW for configuration data. This is to make certain that program code is not stored in this address when the code is compiled.

The four Most Significant bits (MSb) of the FCW, corresponding to CONFIG1H, CONFIG2H, CONFIG3H and CONFIG4H, should always be programmed to '1111'. This makes these FCWs appear to be NOP instructions in the remote event that their locations are ever executed by accident.

The four MSbs of the CONFIG1H, CONFIG2H, CONFIG3H and CONFIG4H registers are not implemented, so writing '1's to their corresponding FCW has no effect on device operation.

To prevent inadvertent configuration changes during code execution, the Configuration registers, CONFIG1L through CONFIG4L, are loaded only once per power-up or Reset cycle. User's firmware can still change the configuration by using self-reprogramming to modify the contents of the FCW.

Modifying the FCW will not change the active contents being used in the CONFIG1L through CONFIG4H registers until after the device is reset.

© 2011 Microchip Technology Inc.

TABLE 27-1: MAPPING OF THE FLASH CONFIGURATION WORDS TO THE CONFIGURATION REGISTERS

Configuration Register (Volatile)	Configuration Register Address	Flash Configuration Byte Address
CONFIG1L	300000h	XXXF8h
CONFIG1H	300001h	XXXF9h
CONFIG2L	300002h	XXXFAh
CONFIG2H	300003h	XXXFBh
CONFIG3L	300004h	XXXFCh
CONFIG3H	300005h	XXXFDh
CONFIG4L	300006h	XXXFEh
CONFIG4H	300007h	XXXFFh

TABLE 27-2: CONFIGURATION BITS AND DEVICE IDs

File Name		Bit 7	Bit 6	Bit 5	Bit 4	Bit 3	Bit 2	Bit 1	Bit 0	Default/ Unprog. Value(1)
300000h	CONFIG1L	$\overline{\text{DEBUG}}$	XINST	STVREN	—	PLLDIV2	PLLDIV1	PLLDIV0	WDTEN	111- 1111
300001h	CONFIG1H	—(2)	—(2)	—(2)	—(2)	—	CP0	CPDIV1	CPDIV0	1111 -111
300002h	CONFIG2L	IESO	FCMEN	—	LPT1OSC	T1DIG	FOSC2	FOSC1	FOSC0	11-1 1111
300003h	CONFIG2H	—(2)	—(2)	—(2)	—(2)	WDTPS3	WDTPS2	WDTPS1	WDTPS0	1111 1111
300004h	CONFIG3L	DSWDTPS3	DSWDTPS2	DSWDTPS1	DSWDTPS0	DSWDTEN	DSBOREN	RTCOSC	DSWDTOSC	1111 1111
300005h	CONFIG3H	—(2)	—(2)	—(2)	—(2)	MSSPMSK	—	—	IOL1WAY	1111 1--1
300006h	CONFIG4L	WPCFG	WPEND	WPFP5	WPFP4	WPFP3	WPFP2	WPFP1	WPFP0	1111 1111
300007h	CONFIG4H	—(2)	—(2)	—(2)	—(2)	—	—	—	WPDIS	1111 ---1
3FFFFEh	DEVID1	DEV2	DEV1	DEV0	REV4	REV3	REV2	REV1	REV0	xxx0 0000(3)
3FFFFFh	DEVID2	DEV10	DEV9	DEV8	DEV7	DEV6	DEV5	DEV4	DEV3	0100 00xx(3)

Legend: x = unknown, u = unchanged, — = unimplemented. Shaded cells are unimplemented, read as '0'.

Note 1: Values reflect the unprogrammed state as received from the factory and following Power-on Resets. In all other Reset states, the configuration bytes maintain their previously programmed states.

2: The value of these bits in program memory should always be programmed to '1'. This ensures that the location is executed as a NOP if it is accidentally executed.

3: See Register 27-9 and Register 27-10 for DEVID values. These registers are read-only and cannot be programmed by the user.

© 2011 Microchip Technology Inc.

REGISTER 27-1: CONFIG1L: CONFIGURATION REGISTER 1 LOW (BYTE ADDRESS 300000h)

R/WO-1	R/WO-1	R/WO-1	U-0	R/WO-1	R/WO-1	R/WO-1	R/WO-1
$\overline{\text{DEBUG}}$	XINST	STVREN	—	PLLDIV2	PLLDIV1	PLLDIV0	WDTEN
bit 7							bit 0

Legend:			
R = Readable bit	WO = Write-Once bit	U = Unimplemented bit, read as ‘0’	
-n = Value at POR	‘1’ = Bit is set	‘0’ = Bit is cleared	x = Bit is unknown

bit 7 **$\overline{\text{DEBUG}}$:** Background Debugger Enable bit
1 = Background debugger is disabled; RB6 and RB7 are configured as general purpose I/O pins
0 = Background debugger is enabled; RB6 and RB7 are dedicated to In-Circuit Debug

bit 6 **XINST:** Extended Instruction Set Enable bit
1 = Instruction set extension and Indexed Addressing mode are enabled
0 = Instruction set extension and Indexed Addressing mode are disabled

bit 5 **STVREN**: Stack Overflow/Underflow Reset Enable bit
1 = Reset on stack overflow/underflow is enabled
0 = Reset on stack overflow/underflow is disabled

bit 4 **Unimplemented:** Read as ‘0’

bit 3-1 **PLLDIV<2:0>:** Oscillator Selection bits
Divider must be selected to provide a 4 MHz input into the 96 MHz PLL.
111 = No divide – oscillator used directly (4 MHz input)
110 = Oscillator divided by 2 (8 MHz input)
101 = Oscillator divided by 3 (12 MHz input)
100 = Oscillator divided by 4 (16 MHz input)
011 = Oscillator divided by 5 (20 MHz input)
010 = Oscillator divided by 6 (24 MHz input)
001 = Oscillator divided by 10 (40 MHz input)
000 = Oscillator divided by 12 (48 MHz input)

bit 0 **WDTEN:** Watchdog Timer Enable bit
1 = WDT is enabled
0 = WDT is disabled (control is placed on SWDTEN bit)

REGISTER 27-2: CONFIG1H: CONFIGURATION REGISTER 1 HIGH (BYTE ADDRESS 300001h)

U-1	U-1	U-1	U-1	U-0	R/WO-1	R/WO-1	R/WO-1
—	—	—	—	—	CP0	CPDIV1	CPDIV0
bit 7							bit 0

Legend:			
R = Readable bit	WO = Write-Once bit	U = Unimplemented bit, read as ‘0’	
-n = Value at POR	‘1’ = Bit is set	‘0’ = Bit is cleared	x = Bit is unknown

bit 7-4 **Unimplemented:** Program the corresponding Flash Configuration bit to ‘1’

bit 3 **Unimplemented:** Maintain as ‘0’

bit 2 **CP0:** Code Protection bit

1 = Program memory is not code-protected
0 = Program memory is code-protected

bit 1-0 **CPDIV<1:0>:** CPU System Clock Selection bits

11 = No CPU system clock divide
10 = CPU system clock is divided by 2
01 = CPU system clock is divided by 3
00 = CPU system clock is divided by 6

© 2011 Microchip Technology Inc.

REGISTER 27-3: CONFIG2L: CONFIGURATION REGISTER 2 LOW (BYTE ADDRESS 300002h)

R/WO-1	R/WO-1	U-0	R/WO-1	R/WO-1	R/WO-1	R/WO-1	R/WO-1
IESO	FCMEN	—	LPT1OSC	T1DIG	FOSC2	FOSC1	FOSC0
bit 7							bit 0

Legend:			
R = Readable bit	WO = Write-Once bit	U = Unimplemented bit, read as '0'	
-n = Value at POR	'1' = Bit is set	'0' = Bit is cleared	x = Bit is unknown

bit 7 **IESO:** Two-Speed Start-up (Internal/External Oscillator Switchover) Control bit
1 = Two-Speed Start-up is enabled
0 = Two-Speed Start-up is disabled

bit 6 **FCMEN:** Fail-Safe Clock Monitor Enable bit
1 = Fail-Safe Clock Monitor is enabled
0 = Fail-Safe Clock Monitor is disabled

bit 5 **Unimplemented:** Read as '0'

bit 4 **LPT1OSC:** Low-Power Timer1 Oscillator Enable bit
1 = Timer1 oscillator is configured for high-power operation
0 = Timer1 oscillator is configured for low-power operation

bit 3 **T1DIG:** Secondary Clock Source T1OSCEN Enforcement bit
1 = Secondary oscillator clock source may be selected (OSCCON<1:0> = 01) regardless of the (T1CON<3>) T1OSCEN state
0 = Secondary oscillator clock source may not be selected unless T1CON<3> = 1

bit 2-0 **FOSC<2:0>:** Oscillator Selection bits
111 = ECPLL oscillator with PLL software controlled, CLKO on RA6
110 = EC oscillator with CLKO on RA6
101 = HSPLL oscillator with PLL software controlled
100 = HS oscillator
011 = INTOSCPLLO, internal oscillator with PLL software controlled, CLKO on RA6, port function on RA7
010 = INTOSCPLL, internal oscillator with PLL software controlled, port function on RA6 and RA7
001 = INTOSCO internal oscillator block (INTRC/INTOSC) with CLKO on RA6, port function on RA7
000 = INTOSC internal oscillator block (INTRC/INTOSC), port function on RA6 and RA7

REGISTER 27-4: CONFIG2H: CONFIGURATION REGISTER 2 HIGH (BYTE ADDRESS 300003h)

U-1	U-1	U-1	U-1	R/WO-1	R/WO-1	R/WO-1	R/WO-1
—	—	—	—	WDTPS3	WDTPS2	WDTPS1	WDTPS0
bit 7							bit 0

Legend:			
R = Readable bit	WO = Write-Once bit	U = Unimplemented bit, read as ‘0’	
-n = Value at POR	‘1’ = Bit is set	‘0’ = Bit is cleared	x = Bit is unknown

bit 7-4 **Unimplemented:** Program the corresponding Flash Configuration bit to ‘1’

bit 3-0 **WDTPS<3:0>:** Watchdog Timer Postscale Select bits

1111 = 1:32,768
1110 = 1:16,384
1101 = 1:8,192
1100 = 1:4,096
1011 = 1:2,048
1010 = 1:1,024
1001 = 1:512
1000 = 1:256
0111 = 1:128
0110 = 1:64
0101 = 1:32
0100 = 1:16
0011 = 1:8
0010 = 1:4
0001 = 1:2
0000 = 1:1

© 2011 Microchip Technology Inc.

REGISTER 27-5: CONFIG3L: CONFIGURATION REGISTER 3 LOW (BYTE ADDRESS 300004h)

R/WO-1	R/WO-1	R/WO-1	R/WO-1	R/WO-1	R/WO-1	R/WO-1	R/WO-1
DSWDTPS3(1)	DSWDTPS2(1)	DSWDTPS1(1)	DSWDTPS0(1)	DSWDTEN(1)	DSBOREN	RTCOSC	DSWDTOSC(1)
bit 7							bit 0

Legend:			
R = Readable bit	WO = Write-Once bit	U = Unimplemented bit, read as '0'	
-n = Value at POR	'1' = Bit is set	'0' = Bit is cleared	x = Bit is unknown

bit 7-4 **DSWDTPS<3:0>:** Deep Sleep Watchdog Timer Postscale Select bits(1)
The DSWDT prescaler is 32. This creates an approximate base time unit of 1 ms.
1111 = 1:2,147,483,648 (25.7 days)
1110 = 1:536,870,912 (6.4 days)
1101 = 1:134,217,728 (38.5 hours)
1100 = 1:33,554,432 (9.6 hours)
1011 = 1:8,388,608 (2.4 hours)
1010 = 1:2,097,152 (36 minutes)
1001 = 1:524,288 (9 minutes)
1000 = 1:131,072 (135 seconds)
0111 = 1:32,768 (34 seconds)
0110 = 1:8,192 (8.5 seconds)
0101 = 1:2,048 (2.1 seconds)
0100 = 1:512 (528 ms)
0011 = 1:128 (132 ms)
0010 = 1:32 (33 ms)
0001 = 1:8 (8.3 ms)
0000 = 1:2 (2.1 ms)

bit 3 **DSWDTEN:** Deep Sleep Watchdog Timer Enable bit(1)
1 = DSWDT is enabled
0 = DSWDT is disabled

bit 2 **DSBOREN:** "F" Device Deep Sleep BOR Enable bit, "LF" Device VDD BOR Enable bit
For "F" Devices:
1 = VDD sensing BOR is enabled in Deep Sleep
0 = VDD sensing BOR circuit is always disabled
For "LF" Devices:
1 = VDD sensing BOR circuit is always enabled
0 = VDD sensing BOR circuit is always disabled

bit 1 **RTCOSC:** RTCC Reference Clock Select bit
1 = RTCC uses T1OSC/T1CKI as reference clock
0 = RTCC uses INTRC as reference clock

bit 0 **DSWDTOSC:** DSWDT Reference Clock Select bit(1)
1 = DSWDT uses INTRC as reference clock
0 = DSWDT uses T1OSC/T1CKI as reference clock

Note 1: These functions are not available on "LF" devices.

REGISTER 27-6: CONFIG3H: CONFIGURATION REGISTER 3 HIGH (BYTE ADDRESS 300005h)

U-1	U-1	U-1	U-1	R/WO-1	U-0	U-0	R/WO-1
—	—	—	—	MSSPMSK	—	—	IOL1WAY
bit 7							bit 0

Legend:			
R = Readable bit	WO = Write-Once bit	U = Unimplemented bit, read as '0'	
-n = Value at POR	'1' = Bit is set	'0' = Bit is cleared	x = Bit is unknown

bit 7-4 **Unimplemented:** Program the corresponding Flash Configuration bit to '1'

bit 3 **MSSPMSK:** MSSP 7-Bit Address Masking Mode Enable bit
1 = 7-Bit Address Masking mode is enabled
0 = 5-Bit Address Masking mode is enabled

bit 2-1 **Unimplemented:** Read as '0'

bit 0 **IOL1WAY:** IOLOCK One-Way Set Enable bit
1 = IOLOCK bit (PPSCON<0>) can be set once, provided the unlock sequence has been completed. Once set, the Peripheral Pin Select registers cannot be written to a second time.
0 = IOLOCK bit (PPSCON<0>) can be set and cleared as needed, provided the unlock sequence has been completed

REGISTER 27-7: CONFIG4L: CONFIGURATION REGISTER 4 LOW (BYTE ADDRESS 300006h)

R/WO-1	R/WO-1	R/WO-1	R/WO-1	R/WO-1	R/WO-1	R/WO-1	R/WO-1
WPCFG	WPEND	WPFP5(2)	WPFP4(3)	WPFP3	WPFP2	WPFP1	WPFP0
bit 7							bit 0

Legend:			
R = Readable bit	WO = Write-Once bit	U = Unimplemented bit, read as '0'	
-n = Value at POR	'1' = Bit is set	'0' = Bit is cleared	x = Bit is unknown

bit 7 **WPCFG:** Write/Erase Protect Configuration Region Select bit
1 = Configuration Words page is not erase/write-protected unless WPEND and WPFP<5:0> settings include the Configuration Words page (and WPDIS = 0)(1)
0 = Configuration Words page is erase/write-protected, regardless of WPDIS, WPEND and WPFP<5:0>(1)

bit 6 **WPEND:** Write/Erase Protect Region Select bit (valid when WPDIS = 0)
1 = Flash pages, WPFP<5:0> to Configuration Words page, are erase/write-protected
0 = Flash pages, 0 to WPFP<5:0>, are erase/write-protected

bit 5-0 **WPFP<5:0>:** Write/Erase Protect Page Start/End Location bits
Used with WPEND bit to define which pages in Flash will be erase/write-protected.

Note 1: The "Configuration Words page" contains the FCWs and is the last page of implemented Flash memory on a given device. Each page consists of 1,024 bytes. For example, on a device with 64 Kbytes of Flash, the first page is 0 and the last page (Configuration Words page) is 63 (3Fh).

2: Implemented in 64-Kbyte devices (PIC18FX6J50). This bit is reserved on 32-Kbyte and 16-Kbyte devices (PIC18FX5J50 and PIC18FX4J50) and should always be programmed to '0' for proper operation on these devices.

3: Implemented in 64-Kbyte and 32-Kbyte devices. This bit is reserved on 16-Kbyte devices (PIC18FX4J50) and should always be programmed to '0' for proper operation on these devices.

© 2011 Microchip Technology Inc.

REGISTER 27-8: CONFIG4H: CONFIGURATION REGISTER 4 HIGH (BYTE ADDRESS 300007h)

U-1	U-1	U-1	U-1	U-0	U-0	U-0	R/WO-1
—	—	—	—	—	—	—	WPDIS
bit 7							bit 0

Legend:			
R = Readable bit	WO = Write-Once bit	U = Unimplemented bit, read as ‘0’	
-n = Value at POR	‘1’ = Bit is set	‘0’ = Bit is cleared	x = Bit is unknown

bit 7-4 **Unimplemented:** Program the corresponding Flash Configuration bit to ‘1’

bit 3-1 **Unimplemented:** Read as ‘0’

bit 0 **WPDIS:** Write-Protect Disable bit

1 = WPFP<5:0> and WPEND bits are ignored; the specified region is not erase/write-protected
0 = WPFP<5:0> and WPEND bits are enabled; erase/write-protect is active for the selected region

REGISTER 27-9: DEVID1: DEVICE ID REGISTER 1 FOR PIC18F46J50 FAMILY DEVICES (BYTE ADDRESS 3FFFFEh)

R	R	R	R	R	R	R	R
DEV2	DEV1	DEV0	REV4	REV3	REV2	REV1	REV0
bit 7							bit 0

Legend:			
R = Readable bit	W = Writable bit	U = Unimplemented bit, read as ‘0’	
-n = Value at POR	‘1’ = Bit is set	‘0’ = Bit is cleared	x = Bit is unknown

bit 7-5 **DEV<2:0>:** Device ID bits

These bits are used with the DEV<10:3> bits in Device ID Register 2 to identify the part number. See Register 27-10.

bit 4-0 **REV<4:0>:** Revision ID bits

These bits are used to indicate the device revision.

REGISTER 27-10: DEVID2: DEVICE ID REGISTER 2 FOR PIC18F46J50 FAMILY DEVICES (BYTE ADDRESS 3FFFFFh)

R	R	R	R	R	R	R	R
DEV10	DEV9	DEV8	DEV7	DEV6	DEV5	DEV4	DEV3
bit 7							bit 0

Legend:			
R = Readable bit	W = Writable bit	U = Unimplemented bit, read as ‘0’	
-n = Value at POR	‘1’ = Bit is set	‘0’ = Bit is cleared	x = Bit is unknown

bit 7-0 **DEV<10:3>:** Device ID bits

These bits are used with the DEV<2:0> bits in the Device ID Register 1 to identify the part number.

DEV<10:3> (DEVID2<7:0>)	DEV<2:0> (DEVID1<7:5>)	Device
0100 1100	101	PIC18F46J50
0100 1100	100	PIC18F45J50
0100 1100	011	PIC18F44J50
0100 1100	010	PIC18F26J50
0100 1100	001	PIC18F25J50
0100 1100	000	PIC18F24J50
0100 1101	011	PIC18LF46J50
0100 1101	010	PIC18LF45J50
0100 1101	001	PIC18LF44J50
0100 1101	000	PIC18LF26J50
0100 1100	111	PIC18LF25J50
0100 1100	110	PIC18LF24J50

© 2011 Microchip Technology Inc.

27.2 Watchdog Timer (WDT)

PIC18F46J50 family devices have both a conventional WDT circuit and a dedicated, Deep Sleep capable Watchdog Timer. When enabled, the conventional WDT operates in normal Run, Idle and Sleep modes. This data sheet section describes the conventional WDT circuit.

The dedicated, Deep Sleep capable WDT can only be enabled in Deep Sleep mode. This timer is described in **Section 4.6.4 "Deep Sleep Watchdog Timer (DSWDT)"**.

The conventional WDT is driven by the INTRC oscillator. When the WDT is enabled, the clock source is also enabled. The nominal WDT period is 4 ms and has the same stability as the INTRC oscillator.

The 4 ms period of the WDT is multiplied by a 16-bit postscaler. Any output of the WDT postscaler is selected by a multiplexer, controlled by the WDTPS bits in Configuration Register 2H. Available periods range from about 4 ms to 135 seconds (2.25 minutes depending on voltage, temperature and WDT postscaler). The WDT and postscaler are cleared whenever a SLEEP or CLRWDT instruction is executed, or a clock failure (primary or Timer1 oscillator) has occurred.

Note 1:	The CLRWDT and SLEEP instructions clear the WDT and postscaler counts when executed.
2:	When a CLRWDT instruction is executed, the postscaler count will be cleared.

27.2.1 CONTROL REGISTER

The WDTCON register (Register 27-11) is a readable and writable register. The SWDTEN bit enables or disables WDT operation. This allows software to override the WDTEN Configuration bit and enable the WDT only if it has been disabled by the Configuration bit.

LVDSTAT is a read-only status bit that is continuously updated and provides information about the current level of V_{DDCORE}. This bit is only valid when the on-chip voltage regulator is enabled.

FIGURE 27-1: WDT BLOCK DIAGRAM

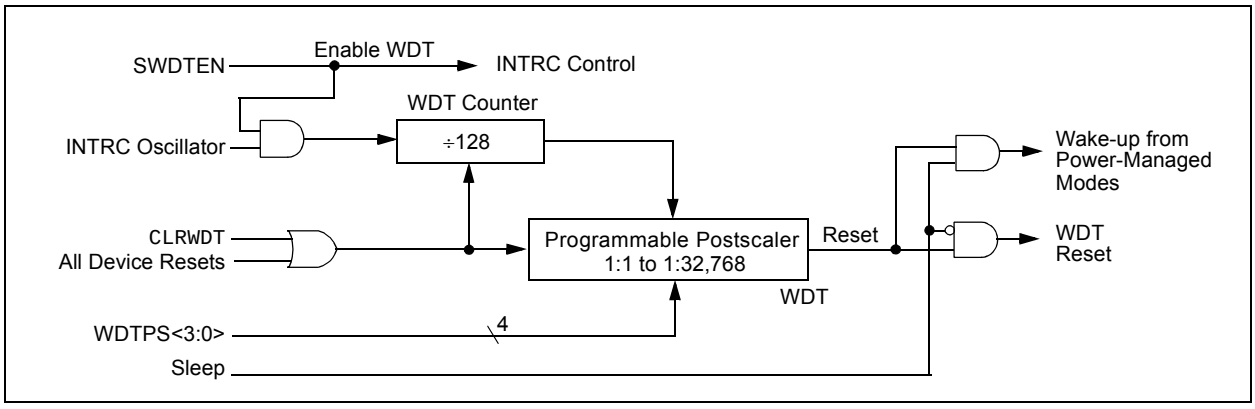

REGISTER 27-11: WDTCON: WATCHDOG TIMER CONTROL REGISTER (ACCESS FC0h)

R/W-1	R-x	R-x	U-0	R-q	R/W-0	R/W-0	R/W-0
REGSLP	LVDSTAT(2)	ULPLVL	—	DS	ULPEN	ULPSINK	SWDTEN(1)
bit 7							bit 0

Legend:			
R = Readable bit	W = Writable bit	U = Unimplemented bit, read as '0'	q = Depends on condition
-n = Value at POR	'1' = Bit is set	'0' = Bit is cleared	x = Bit is unknown

bit 7 **REGSLP:** Voltage Regulator Low-Power Operation Enable bit
1 = On-chip regulator enters low-power operation when device enters Sleep mode
0 = On-chip regulator is active even in Sleep mode

bit 6 **LVDSTAT:** Low-Voltage Detect Status bit(2)
1 = V_{DDCORE} > 2.45V nominal
0 = V_{DDCORE} < 2.45V nominal

bit 5 **ULPLVL:** Ultra Low-Power Wake-up Output bit (not valid unless ULPEN = 1)
1 = Voltage on RA0 > ~0.5V
0 = Voltage on RA0 < ~0.5V

bit 4 **Unimplemented**: Read as '0'

bit 3 **DS:** Deep Sleep Wake-up Status bit (used in conjunction with RCON, POR and BOR bits to determine Reset source)(2)
1 = If the last exit from Reset was caused by a normal wake-up from Deep Sleep
0 = If the last exit from Reset was not due to a wake-up from Deep Sleep

bit 2 **ULPEN:** Ultra Low-Power Wake-up Module Enable bit
1 = Ultra Low-Power Wake-up module is enabled; ULPLVL bit indicates the comparator output
0 = Ultra Low-Power Wake-up module is disabled

bit 1 **ULPSINK:** Ultra Low-Power Wake-up Current Sink Enable bit
1 = Ultra Low-Power Wake-up current sink is enabled
0 = Ultra Low-Power Wake-up current sink is disabled

bit 0 **SWDTEN:** Software Controlled Watchdog Timer Enable bit(1)
1 = Watchdog Timer is on
0 = Watchdog Timer is off

Note 1: This bit has no effect if the Configuration bit, WDTEN, is enabled.
2: Not available on devices where the on-chip voltage regulator is disabled ("LF" devices).

TABLE 27-3: SUMMARY OF WATCHDOG TIMER REGISTERS

Name	Bit 7	Bit 6	Bit 5	Bit 4	Bit 3	Bit 2	Bit 1	Bit 0	Reset Values on Page:
RCON	IPEN	—	$\overline{CM}$	$\overline{RI}$	$\overline{TO}$	$\overline{PD}$	$\overline{POR}$	$\overline{BOR}$	70
WDTCON	REGSLP	LVDSTAT	ULPLVL	—	DS	ULPEN	ULPSINK	SWDTEN	70

Legend: — = unimplemented, read as '0'. Shaded cells are not used by the Watchdog Timer.

© 2011 Microchip Technology Inc.

27.3 On-Chip Voltage Regulator

Note 1: The on-chip voltage regulator is only available on parts designated with an “F”, such as PIC18**F**25J50. The on-chip regulator is disabled on devices with “LF” in their part number.

2: The VDDCORE/VCAP pin must never be left floating. On “F” devices, it must be connected to a capacitor, of size, CEFC, to ground. On “LF” devices, VDDCORE/VCAP must be connected to a power supply source between 2.0V and 2.7V.

The digital core logic of the PIC18F46J50 family devices is designed on an advanced manufacturing process, which requires 2.0V to 2.7V. The digital core logic obtains power from the VDDCORE/VCAP power supply pin.

However, in many applications it may be inconvenient to run the I/O pins at the same core logic voltage, as it would restrict the ability of the device to interface with other, higher voltage devices, such as those run at a nominal 3.3V. Therefore, all PIC18F46J50 family devices implement a dual power supply rail topology. The core logic obtains power from the VDDCORE/VCAP pin, while the general purpose I/O pins obtain power from the VDD pin of the microcontroller, which may be supplied with a voltage between 2.15V to 3.6V (“F” device) or 2.0V to 3.6V (“LF” device).

This dual supply topology allows the microcontroller to interface with standard 3.3V logic devices, while running the core logic at a lower voltage of nominally 2.5V.

In order to make the microcontroller more convenient to use, an integrated 2.5V low dropout, low quiescent current linear regulator has been integrated on the die inside PIC18F46J50 family devices. This regulator is designed specifically to supply the core logic of the device. It allows PIC18F46J50 family devices to effectively run from a single power supply rail, without the need for external regulators.

The on-chip voltage regulator is always enabled on “F” devices. The VDDCORE/VCAP pin serves simultaneously as the regulator output pin and the core logic supply power input pin. A capacitor should be connected to the VDDCORE/VCAP pin to ground and is necessary for regulator stability. For example connections for PIC18F and PIC18LF devices, see Figure 27-2.

On “LF” devices, the on-chip regulator is always disabled. This allows the device to save a small amount of quiescent current consumption, which may be advantageous in some types of applications, such as those which will entirely be running at a nominal 2.5V. On “LF” devices, the VDDCORE/VCAP pin still serves as the core logic power supply input pin, and therefore, must be connected to a 2.0V to 2.7V supply rail at the application circuit board level. On these devices, the I/O pins may still optionally be supplied with a voltage between 2.0V to 3.6V, provided that VDD is always greater than, or equal to, VDDCORE/VCAP. For example connections for PIC18F and PIC18LF devices, see Figure 27-2.

Note: In parts designated with an “LF”, such as PIC18LF46J50, VDDCORE must never exceed VDD.

The specifications for core voltage and capacitance are listed in **Section 30.3 “DC Characteristics: PIC18F46J50 Family (Industrial)”**.

27.3.1 VOLTAGE REGULATOR TRACKING MODE AND LOW-VOLTAGE DETECTION

When it is enabled, the on-chip regulator provides a constant voltage of 2.5V nominal to the digital core logic. The regulator can provide this level from a VDD of about 2.5V, all the way up to the device’s VDDMAX. It does not have the capability to boost VDD levels below 2.5V. When the VDD supply input voltage drops too low to regulate 2.5V, the regulator enters Tracking mode. In Tracking mode, the regulator output follows VDD, with a typical voltage drop of 100 mV or less.

The on-chip regulator includes a simple Low-Voltage Detect (LVD) circuit. This circuit is separate and independent of the High/Low-Voltage Detect (HLVD) module described in **Section 25.0 “High/Low Voltage Detect (HLVD)”**. The on-chip regulator LVD circuit continuously monitors the VDDCORE voltage level and updates the LVDSTAT bit in the WDTCON register. The LVD detect threshold is set slightly below the normal regulation set point of the on-chip regulator.

Application firmware may optionally poll the LVDSTAT bit to determine when it is safe to run at maximum rated frequency, so as not to inadvertently violate the voltage versus frequency requirements provided by Figure 30-1.

The VDDCORE monitoring LVD circuit is only active when the on-chip regulator is enabled. On “LF” devices, the Analog-to-Digital Converter and the HLVD module can still be used to provide firmware with VDD and VDDCORE voltage level information.

FIGURE 27-2: CONNECTIONS FOR THE ON-CHIP REGULATOR

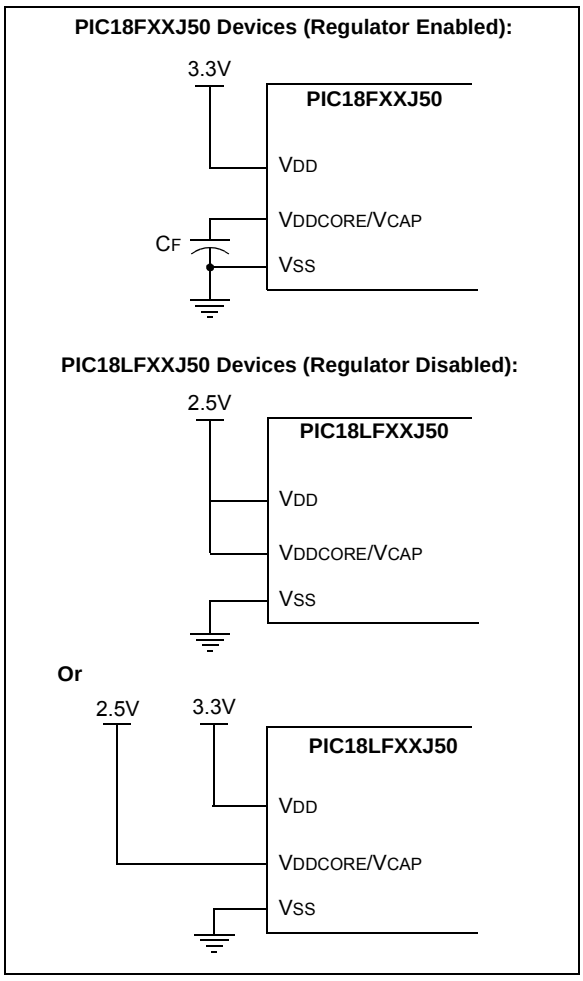

27.3.2 ON-CHIP REGULATOR AND BOR

When the on-chip regulator is enabled, PIC18F46J50 family devices also have a simple brown-out capability. If the voltage supplied to the regulator is inadequate to maintain a minimum output level; the regulator Reset circuitry will generate a Brown-out Reset (BOR). This event is captured by the $\overline{\text{BOR}}$ flag bit (RCON<0>).

The operation of the BOR is described in more detail in **Section 5.4 "Brown-out Reset (BOR)"** and **Section 5.4.1 "Detecting BOR"**. The brown-out voltage levels are specific in **Section 30.1 "DC Characteristics: Supply Voltage PIC18F46J50 Family (Industrial)"**.

27.3.3 POWER-UP REQUIREMENTS

The on-chip regulator is designed to meet the power-up requirements for the device. If the application does not use the regulator, then strict power-up conditions must be adhered to. While powering up, V_{DDCORE} should not exceed V_{DD} by 0.3 volts.

27.3.4 OPERATION IN SLEEP MODE

When enabled, the on-chip regulator always consumes a small incremental amount of current over I_{DD}. This includes when the device is in Sleep mode, even though the core digital logic does not require much power. To provide additional savings in applications where power resources are critical, the regulator can be configured to automatically enter a lower quiescent draw Standby mode whenever the device goes into Sleep mode. This feature is controlled by the REGSLP bit (WDTCON<7>, Register 27-11). If this bit is set upon entry into Sleep mode, the regulator will transition into a lower power state. In this state, the regulator still provides a regulated output voltage necessary to maintain SRAM state information, but consumes less quiescent current.

Substantial Sleep mode power savings can be obtained by setting the REGSLP bit, but device wake-up time will increase in order to insure the regulator has enough time to stabilize.

© 2011 Microchip Technology Inc.

27.4 Two-Speed Start-up

The Two-Speed Start-up feature helps to minimize the latency period, from oscillator start-up to code execution, by allowing the microcontroller to use the INTRC oscillator as a clock source until the primary clock source is available. It is enabled by setting the IESO Configuration bit.

Two-Speed Start-up should be enabled only if the primary oscillator mode is HS or HSPLL (Crystal-Based) modes. Since the EC and ECPLL modes do not require an Oscillator Start-up Timer (OST) delay, Two-Speed Start-up should be disabled.

When enabled, Resets and wake-ups from Sleep mode cause the device to configure itself to run from the internal oscillator block as the clock source, following the time-out of the Power-up Timer after a Power-on Reset is enabled. This allows almost immediate code execution while the primary oscillator starts and the OST is running. Once the OST times out, the device automatically switches to PRI_RUN mode.

In all other power-managed modes, Two-Speed Start-up is not used. The device will be clocked by the currently selected clock source until the primary clock source becomes available. The setting of the IESO bit is ignored.

FIGURE 27-3: TIMING TRANSITION FOR TWO-SPEED START-UP (INTRC TO HSPLL)

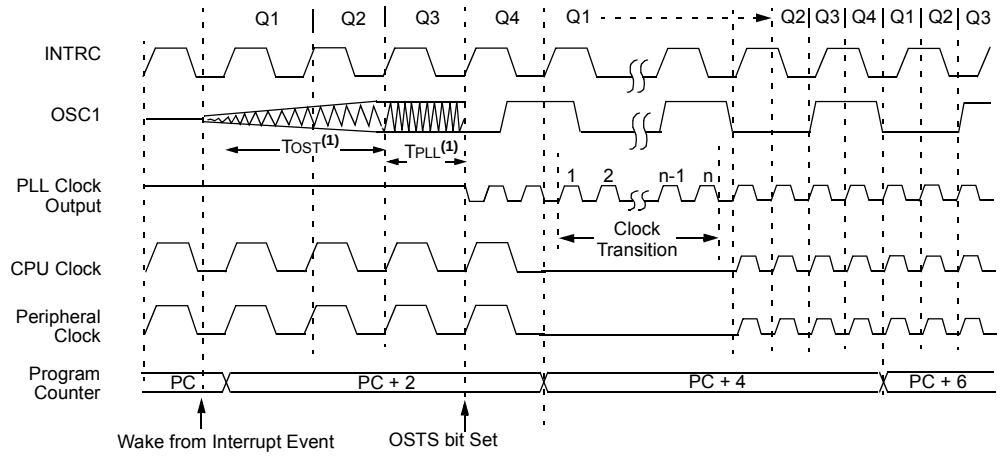

Note1: TOST = 1024 TOSC; TPLL = 2 ms (approx). These intervals are not shown to scale.

27.4.1 SPECIAL CONSIDERATIONS FOR USING TWO-SPEED START-UP

While using the INTRC oscillator in Two-Speed Start-up, the device still obeys the normal command sequences for entering power-managed modes, including serial SLEEP instructions (refer to **Section 4.1.4 "Multiple Sleep Commands"**). In practice, this means that user code can change the SCS<1:0> bit settings or issue SLEEP instructions before the OST times out. This would allow an application to briefly wake-up, perform routine "housekeeping" tasks and return to Sleep before the device starts to operate from the primary oscillator.

User code can also check if the primary clock source is currently providing the device clocking by checking the status of the OSTS bit (OSCCON<3>). If the bit is set, the primary oscillator is providing the clock. Otherwise, the internal oscillator block is providing the clock during wake-up from Reset or Sleep mode.

27.5 Fail-Safe Clock Monitor

The Fail-Safe Clock Monitor (FSCM) allows the microcontroller to continue operation in the event of an external oscillator failure by automatically switching the device clock to the internal oscillator block. The FSCM function is enabled by setting the FCMEN Configuration bit.

When FSCM is enabled, the INTRC oscillator runs at all times to monitor clocks to peripherals and provide a backup clock in the event of a clock failure. Clock monitoring (shown in Figure 27-4) is accomplished by creating a sample clock signal, which is the INTRC output divided by 64. This allows ample time between FSCM sample clocks for a peripheral clock edge to occur. The peripheral device clock and the sample clock are presented as inputs to the clock monitor latch. The clock monitor is set on the falling edge of the device clock source but cleared on the rising edge of the sample clock.

FIGURE 27-4: FSCM BLOCK DIAGRAM

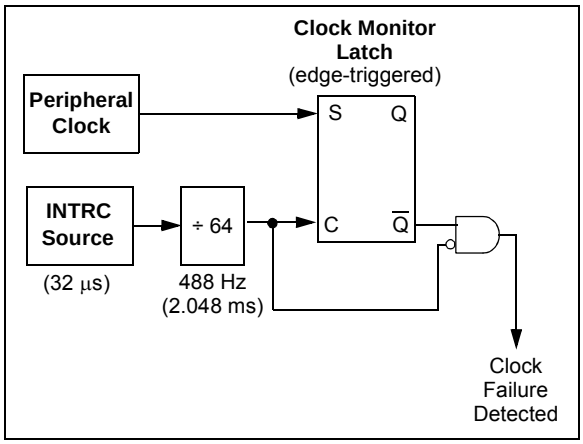

Clock failure is tested for on the falling edge of the sample clock. If a sample clock falling edge occurs while the clock monitor is still set, and a clock failure has been detected (Figure 27-5), the following results:

- The FSCM generates an oscillator fail interrupt by setting bit, OSCFIF (PIR2<7>).
- The device clock source is switched to the internal oscillator block (OSCCON is not updated to show the current clock source – this is the Fail-safe condition).
- The WDT is reset.

During switchover, the postscaler frequency from the internal oscillator block may not be sufficiently stable for timing-sensitive applications. In these cases, it may be desirable to select another clock configuration and enter an alternate power-managed mode. This can be done to attempt a partial recovery or execute a controlled shutdown. See **Section 4.1.4 "Multiple Sleep Commands"** and **Section 27.4.1 "Special Considerations for Using Two-Speed Start-up"** for more details.

The FSCM will detect failures of the primary or secondary clock sources only. If the internal oscillator block fails, no failure would be detected, nor would any action be possible.

27.5.1 FSCM AND THE WATCHDOG TIMER

Both the FSCM and the WDT are clocked by the INTRC oscillator. Since the WDT operates with a separate divider and counter, disabling the WDT has no effect on the operation of the INTRC oscillator when the FSCM is enabled.

As already noted, the clock source is switched to the INTRC clock when a clock failure is detected; this may mean a substantial change in the speed of code execution. If the WDT is enabled with a small prescale value, a decrease in clock speed allows a WDT time-out to occur and a subsequent device Reset. For this reason, Fail-Safe Clock Monitor events also reset the WDT and postscaler, allowing it to start timing from when execution speed was changed and decreasing the likelihood of an erroneous time-out.

FIGURE 27-5: FSCM TIMING DIAGRAM

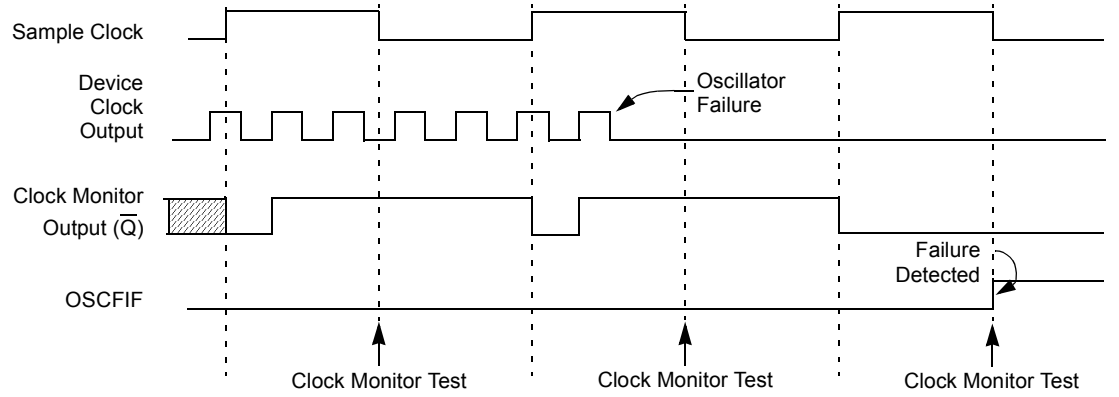

Note: The device clock is normally at a much higher frequency than the sample clock. The relative frequencies in this example have been chosen for clarity.

© 2011 Microchip Technology Inc.

27.5.2 EXITING FAIL-SAFE OPERATION

The Fail-Safe Clock Monitor condition is terminated by either a device Reset or by entering a power-managed mode. On Reset, the controller starts the primary clock source specified in Configuration Register 2H (with any required start-up delays that are required for the oscillator mode, such as the OST or PLL timer). The INTRC oscillator provides the device clock until the primary clock source becomes ready (similar to a Two-Speed Start-up). The clock source is then switched to the primary clock (indicated by the OSTS bit in the OSCCON register becoming set). The FSCM then resumes monitoring the peripheral clock.

The primary clock source may never become ready during start-up. In this case, operation is clocked by the INTRC oscillator. The OSCCON register will remain in its Reset state until a power-managed mode is entered.

27.5.3 FSCM INTERRUPTS IN POWER-MANAGED MODES

By entering a power-managed mode, the clock multiplexer selects the clock source selected by the OSCCON register. FSCM of the power-managed clock source resumes in the power-managed mode.

If an oscillator failure occurs during power-managed operation, the subsequent events depend on whether or not the oscillator failure interrupt is enabled. If enabled (OSCFIF = 1), code execution will be clocked by the INTRC multiplexer. An automatic transition back to the failed clock source will not occur.

If the interrupt is disabled, subsequent interrupts while in Idle mode will cause the CPU to begin executing instructions while being clocked by the INTRC source.

27.5.4 POR OR WAKE-UP FROM SLEEP

The FSCM is designed to detect oscillator failure at any point after the device has exited Power-on Reset (POR) or low-power Sleep mode. When the primary device clock is either the EC or INTRC modes, monitoring can begin immediately following these events.

For HS or HSPLL modes, the situation is somewhat different. Since the oscillator may require a start-up time considerably longer than the FSCM sample clock time, a false clock failure may be detected. To prevent this, the internal oscillator block is automatically configured as the device clock and functions until the primary clock is stable (the OST and PLL timers have timed out). This is identical to Two-Speed Start-up mode. Once the primary clock is stable, the INTRC returns to its role as the FSCM source.

Note:	The same logic that prevents false oscillator failure interrupts on POR, or wake-up from Sleep, will also prevent the detection of the oscillator's failure to start at all following these events. This can be avoided by monitoring the OSTS bit and using a timing routine to determine if the oscillator is taking too long to start. Even so, no oscillator failure interrupt will be flagged.

As noted in **Section 27.4.1 "Special Considerations for Using Two-Speed Start-up"**, it is also possible to select another clock configuration and enter an alternate power-managed mode while waiting for the primary clock to become stable. When the new power-managed mode is selected, the primary clock is disabled.

27.6 Program Verification and Code Protection

For all devices in the PIC18F46J50 family, the on-chip program memory space is treated as a single block. Code protection for this block is controlled by one Configuration bit, CP0. This bit inhibits external reads and writes to the program memory space. It has no direct effect in normal execution mode.

27.6.1 CONFIGURATION REGISTER PROTECTION

The Configuration registers are protected against untoward changes or reads in two ways. The primary protection is the write-once feature of the Configuration bits, which prevents reconfiguration once the bit has been programmed during a power cycle. To safeguard against unpredictable events, Configuration bit changes resulting from individual cell level disruptions (such as ESD events) will cause a parity error and trigger a device Reset. This is seen by the user as a Configuration Mismatch (CM) Reset.

The data for the Configuration registers is derived from the FCW in program memory. When the CP0 bit is set, the source data for device configuration is also protected as a consequence.

27.7 In-Circuit Serial Programming (ICSP)

PIC18F46J50 family microcontrollers can be serially programmed while in the end application circuit. This is simply done with two lines for clock and data, and three other lines for power, ground and the programming voltage. This allows customers to manufacture boards with unprogrammed devices and then program the microcontroller just before shipping the product. This also allows the most recent firmware or a custom firmware to be programmed.

27.8 In-Circuit Debugger

When the $\overline{\text{DEBUG}}$ Configuration bit is programmed to a '0', the In-Circuit Debugger functionality is enabled. This function allows simple debugging functions when used with MPLAB® IDE. When the microcontroller has this feature enabled, some resources are not available for general use.

Table 27-4 lists the resources required by the background debugger.

TABLE 27-4: DEBUGGER RESOURCES

I/O pins:	RB6, RB7
Stack:	TOSx register reserved

© 2011 Microchip Technology Inc.

28.0 INSTRUCTION SET SUMMARY

The PIC18F46J50 family of devices incorporates the standard set of 75 PIC18 core instructions, and an extended set of eight new instructions for the optimization of code that is recursive or that utilizes a software stack. The extended set is discussed later in this section.

28.1 Standard Instruction Set

The standard PIC18 instruction set adds many enhancements to the previous PIC® MCU instruction sets, while maintaining an easy migration from these PIC MCU instruction sets. Most instructions are a single program memory word (16 bits), but there are four instructions that require two program memory locations.

Each single-word instruction is a 16-bit word divided into an opcode, which specifies the instruction type and one or more operands, which further specify the operation of the instruction.

The instruction set is highly orthogonal and is grouped into four basic categories:

- **Byte-oriented** operations
- **Bit-oriented** operations
- **Literal** operations
- **Control** operations

The PIC18 instruction set summary in Table 28-2 lists the **byte-oriented**, **bit-oriented**, **literal** and **control** operations.

Table 28-1 provides the opcode field descriptions.

Most **Byte-oriented** instructions have three operands:

1. The file register (specified by ‘f’)
2. The destination of the result (specified by ‘d’)
3. The accessed memory (specified by ‘a’)

The file register designator, ‘f’, specifies which file register is to be used by the instruction. The destination designator, ‘d’, specifies where the result of the operation is to be placed. If ‘d’ is ‘0’, the result is placed in the WREG register. If ‘d’ is ‘1’, the result is placed in the file register specified in the instruction.

All **Bit-oriented** instructions have three operands:

1. The file register (specified by ‘f’)
2. The bit in the file register (specified by ‘b’)
3. The accessed memory (specified by ‘a’)

The bit field designator, ‘b’, selects the number of the bit affected by the operation, while the file register designator, ‘f’, represents the number of the file in which the bit is located.

The **Literal** instructions may use some of the following operands:

- A literal value to be loaded into a file register (specified by ‘k’)
- The desired FSR register to load the literal value into (specified by ‘f’)
- No operand required (specified by ‘—’)

The **Control** instructions may use some of the following operands:

- A program memory address (specified by ‘n’)
- The mode of the CALL or RETURN instructions (specified by ‘s’)
- The mode of the table read and table write instructions (specified by ‘m’)
- No operand required (specified by ‘—’)

All instructions are a single word, except for four double-word instructions. These instructions were made double-word to contain the required information in 32 bits. In the second word, the 4 MSbs are ‘1’s. If this second word is executed as an instruction (by itself), it will execute as a NOP.

All single-word instructions are executed in a single instruction cycle, unless a conditional test is true or the Program Counter (PC) is changed as a result of the instruction. In these cases, the execution takes two instruction cycles with the additional instruction cycle(s) executed as a NOP.

The double-word instructions execute in two instruction cycles.

One instruction cycle consists of four oscillator periods. Thus, for an oscillator frequency of 4 MHz, the normal instruction execution time is 1 μs. If a conditional test is true, or the Program Counter is changed as a result of an instruction, the instruction execution time is 2 μs. Two-word branch instructions (if true) would take 3 μs.

Figure 28-1 provides the general formats that the instructions can have. All examples use the convention ‘nnh’ to represent a hexadecimal number.

The instruction set summary, provided in Table 28-2, lists the standard instructions recognized by the Microchip MPASM™ Assembler.

Section 28.1.1 “Standard Instruction Set” provides a description of each instruction.

TABLE 28-1: OPCODE FIELD DESCRIPTIONS

Field	Description
a	RAM access bit: a = 0: RAM location in Access RAM (BSR register is ignored) a = 1: RAM bank is specified by BSR register
bbb	Bit address within an 8-bit file register (0 to 7)
BSR	Bank Select Register. Used to select the current RAM bank
C, DC, Z, OV, N	ALU Status bits: **C**arry, **D**igit **C**arry, **Z**ero, **Ov**erflow, **N**egative
d	Destination select bit: d = 0: store result in WREG d = 1: store result in file register f
dest	Destination: either the WREG register or the specified register file location
f	8-bit register file address (00h to FFh), or 2-bit FSR designator (0h to 3h)
f_s	12-bit register file address (000h to FFFh). This is the source address
f_d	12-bit register file address (000h to FFFh). This is the destination address
GIE	Global Interrupt Enable bit
k	Literal field, constant data or label (may be either an 8-bit, 12-bit or a 20-bit value)
label	Label name
mm	The mode of the TBLPTR register for the table read and table write instructions Used only with table read and table write instructions
*	No Change to register (such as TBLPTR with table reads and writes)
*+	Post-Increment register (such as TBLPTR with table reads and writes)
*-	Post-Decrement register (such as TBLPTR with table reads and writes)
+*	Pre-Increment register (such as TBLPTR with table reads and writes)
n	The relative address (2's complement number) for relative branch instructions or the direct address for Call/Branch and Return instructions
PC	Program Counter
PCL	Program Counter Low Byte
PCH	Program Counter High Byte
PCLATH	Program Counter High Byte Latch
PCLATU	Program Counter Upper Byte Latch
$\overline{PD}$	Power-Down bit
PRODH	Product of Multiply High Byte
PRODL	Product of Multiply Low Byte
s	Fast Call/Return mode select bit: s = 0: do not update into/from shadow registers s = 1: certain registers loaded into/from shadow registers (Fast mode)
TBLPTR	21-Bit Table Pointer (points to a program memory location)
TABLAT	8-Bit Table Latch
$\overline{TO}$	Time-out bit
TOS	Top-of-Stack
u	Unused or Unchanged
WDT	Watchdog Timer
WREG	Working register (accumulator)
x	Don't care ('0' or '1'). The assembler will generate code with x = 0; it is the recommended form of use for compatibility with all Microchip software tools
z_s	7-bit offset value for Indirect Addressing of register files (source)
z_d	7-bit offset value for Indirect Addressing of register files (destination)
{ }	Optional argument
[text]	Indicates Indexed Addressing
(text)	The contents of text
[expr]<n>	Specifies bit n of the register indicated by the pointer, expr
→	Assigned to
< >	Register bit field
∈	In the set of
italics	User-defined term (font is Courier New)

© 2011 Microchip Technology Inc.

EXAMPLE 28-1: GENERAL FORMAT FOR INSTRUCTIONS

Byte-oriented file register operations

Example Instruction

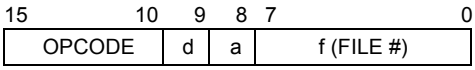

ADDWF MYREG, W, B

d = 0 for result destination to be WREG register
d = 1 for result destination to be file register (f)
a = 0 to force Access Bank
a = 1 for BSR to select bank
f = 8-bit file register address

Byte to Byte move operations (2-word)

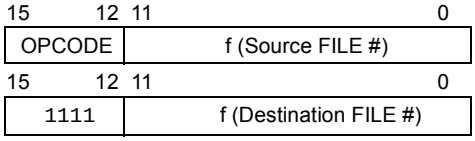

MOVFF MYREG1, MYREG2

f = 12-bit file register address

Bit-oriented file register operations

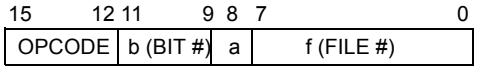

BSF MYREG, bit, B

b = 3-bit position of bit in file register (f)
a = 0 to force Access Bank
a = 1 for BSR to select bank
f = 8-bit file register address

Literal operations

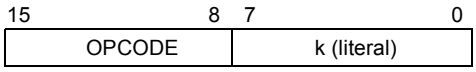

MOVLW 7Fh

k = 8-bit immediate value

Control operations

CALL, GOTO and Branch operations

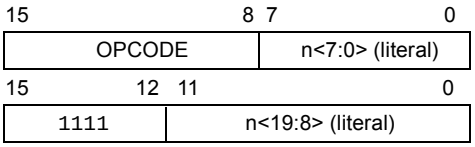

GOTO Label

n = 20-bit immediate value

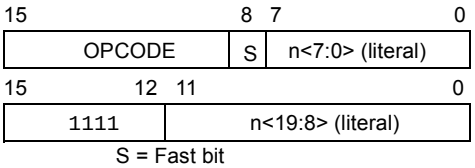

CALL MYFUNC

S = Fast bit

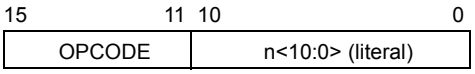

BRA MYFUNC

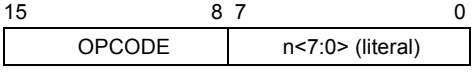

BC MYFUNC

TABLE 28-2: PIC18F46J50 FAMILY INSTRUCTION SET

Mnemonic, Operands		Description	Cycles	16-Bit Instruction Word				Status Affected	Notes
				MSb			LSb		
BYTE-ORIENTED OPERATIONS									
ADDWF	f, d, a	Add WREG and f	1	0010	01da	ffff	ffff	C, DC, Z, OV, N	1, 2
ADDWFC	f, d, a	Add WREG and Carry bit to f	1	0010	00da	ffff	ffff	C, DC, Z, OV, N	1, 2
ANDWF	f, d, a	AND WREG with f	1	0001	01da	ffff	ffff	Z, N	1,2
CLRF	f, a	Clear f	1	0110	101a	ffff	ffff	Z	2
COMF	f, d, a	Complement f	1	0001	11da	ffff	ffff	Z, N	1, 2
CPFSEQ	f, a	Compare f with WREG, Skip =	1 (2 or 3)	0110	001a	ffff	ffff	None	4
CPFSGT	f, a	Compare f with WREG, Skip >	1 (2 or 3)	0110	010a	ffff	ffff	None	4
CPFSLT	f, a	Compare f with WREG, Skip <	1 (2 or 3)	0110	000a	ffff	ffff	None	1, 2
DECF	f, d, a	Decrement f	1	0000	01da	ffff	ffff	C, DC, Z, OV, N	1, 2, 3, 4
DECFSZ	f, d, a	Decrement f, Skip if 0	1 (2 or 3)	0010	11da	ffff	ffff	None	1, 2, 3, 4
DCFSNZ	f, d, a	Decrement f, Skip if Not 0	1 (2 or 3)	0100	11da	ffff	ffff	None	1, 2
INCF	f, d, a	Increment f	1	0010	10da	ffff	ffff	C, DC, Z, OV, N	1, 2, 3, 4
INCFSZ	f, d, a	Increment f, Skip if 0	1 (2 or 3)	0011	11da	ffff	ffff	None	4
INFSNZ	f, d, a	Increment f, Skip if Not 0	1 (2 or 3)	0100	10da	ffff	ffff	None	1, 2
IORWF	f, d, a	Inclusive OR WREG with f	1	0001	00da	ffff	ffff	Z, N	1, 2
MOVF	f, d, a	Move f	1	0101	00da	ffff	ffff	Z, N	1
MOVFF	f_s, f_d	Move f_s (source) to 1st word	2	1100	ffff	ffff	ffff	None	
		f_d (destination) 2nd word		1111	ffff	ffff	ffff		
MOVWF	f, a	Move WREG to f	1	0110	111a	ffff	ffff	None	
MULWF	f, a	Multiply WREG with f	1	0000	001a	ffff	ffff	None	1, 2
NEGF	f, a	Negate f	1	0110	110a	ffff	ffff	C, DC, Z, OV, N	
RLCF	f, d, a	Rotate Left f through Carry	1	0011	01da	ffff	ffff	C, Z, N	1, 2
RLNCF	f, d, a	Rotate Left f (No Carry)	1	0100	01da	ffff	ffff	Z, N	
RRCF	f, d, a	Rotate Right f through Carry	1	0011	00da	ffff	ffff	C, Z, N	
RRNCF	f, d, a	Rotate Right f (No Carry)	1	0100	00da	ffff	ffff	Z, N	
SETF	f, a	Set f	1	0110	100a	ffff	ffff	None	1, 2
SUBFWB	f, d, a	Subtract f from WREG with Borrow	1	0101	01da	ffff	ffff	C, DC, Z, OV, N	
SUBWF	f, d, a	Subtract WREG from f	1	0101	11da	ffff	ffff	C, DC, Z, OV, N	1, 2
SUBWFB	f, d, a	Subtract WREG from f with Borrow	1	0101	10da	ffff	ffff	C, DC, Z, OV, N	
SWAPF	f, d, a	Swap Nibbles in f	1	0011	10da	ffff	ffff	None	4
TSTFSZ	f, a	Test f, Skip if 0	1 (2 or 3)	0110	011a	ffff	ffff	None	1, 2
XORWF	f, d, a	Exclusive OR WREG with f	1	0001	10da	ffff	ffff	Z, N	

Note 1: When a PORT register is modified as a function of itself (e.g., `MOVF PORTB, 1, 0`), the value used will be that value present on the pins themselves. For example, if the data latch is '1' for a pin configured as input and is driven low by an external device, the data will be written back with a '0'.

2: If this instruction is executed on the TMR0 register (and, where applicable, d = 1), the prescaler will be cleared if assigned.

3: If the Program Counter (PC) is modified or a conditional test is true, the instruction requires two cycles. The second cycle is executed as a `NOP`.

4: Some instructions are two-word instructions. The second word of these instructions will be executed as a `NOP` unless the first word of the instruction retrieves the information embedded in these 16 bits. This ensures that all program memory locations have a valid instruction.

© 2011 Microchip Technology Inc.

TABLE 28-2: PIC18F46J50 FAMILY INSTRUCTION SET (CONTINUED)

Mnemonic, Operands		Description	Cycles	16-Bit Instruction Word				Status Affected	Notes
				MSb			LSb		
BIT-ORIENTED OPERATIONS									
BCF	f, b, a	Bit Clear f	1	1001	bbba	ffff	ffff	None	1, 2
BSF	f, b, a	Bit Set f	1	1000	bbba	ffff	ffff	None	1, 2
BTFSC	f, b, a	Bit Test f, Skip if Clear	1 (2 or 3)	1011	bbba	ffff	ffff	None	3, 4
BTFSS	f, b, a	Bit Test f, Skip if Set	1 (2 or 3)	1010	bbba	ffff	ffff	None	3, 4
BTG	f, b, a	Bit Toggle f	1	0111	bbba	ffff	ffff	None	1, 2
CONTROL OPERATIONS									
BC	n	Branch if Carry	1 (2)	1110	0010	nnnn	nnnn	None	
BN	n	Branch if Negative	1 (2)	1110	0110	nnnn	nnnn	None	
BNC	n	Branch if Not Carry	1 (2)	1110	0011	nnnn	nnnn	None	
BNN	n	Branch if Not Negative	1 (2)	1110	0111	nnnn	nnnn	None	
BNOV	n	Branch if Not Overflow	1 (2)	1110	0101	nnnn	nnnn	None	
BNZ	n	Branch if Not Zero	1 (2)	1110	0001	nnnn	nnnn	None	
BOV	n	Branch if Overflow	1 (2)	1110	0100	nnnn	nnnn	None	
BRA	n	Branch Unconditionally	2	1101	0nnn	nnnn	nnnn	None	
BZ	n	Branch if Zero	1 (2)	1110	0000	nnnn	nnnn	None	
CALL	n, s	Call Subroutine 1st word	2	1110	110s	kkkk	kkkk	None	
		2nd word		1111	kkkk	kkkk	kkkk		
CLRWDT	—	Clear Watchdog Timer	1	0000	0000	0000	0100	$\overline{TO}$, $\overline{PD}$	
DAW	—	Decimal Adjust WREG	1	0000	0000	0000	0111	C	
GOTO	n	Go to Address 1st word	2	1110	1111	kkkk	kkkk	None	
		2nd word		1111	kkkk	kkkk	kkkk		
NOP	—	No Operation	1	0000	0000	0000	0000	None	
NOP	—	No Operation	1	1111	xxxx	xxxx	xxxx	None	4
POP	—	Pop Top of Return Stack (TOS)	1	0000	0000	0000	0110	None	
PUSH	—	Push Top of Return Stack (TOS)	1	0000	0000	0000	0101	None	
RCALL	n	Relative Call	2	1101	1nnn	nnnn	nnnn	None	
RESET		Software Device Reset	1	0000	0000	1111	1111	All	
RETFIE	s	Return from Interrupt Enable	2	0000	0000	0001	000s	GIE/GIEH, PEIE/GIEL	
RETLW	k	Return with Literal in WREG	2	0000	1100	kkkk	kkkk	None	
RETURN	s	Return from Subroutine	2	0000	0000	0001	001s	None	
SLEEP	—	Go into Standby mode	1	0000	0000	0000	0011	$\overline{TO}$, $\overline{PD}$	

Note 1: When a PORT register is modified as a function of itself (e.g., `MOVF PORTB, 1, 0`), the value used will be that value present on the pins themselves. For example, if the data latch is '1' for a pin configured as input and is driven low by an external device, the data will be written back with a '0'.

2: If this instruction is executed on the TMR0 register (and, where applicable, d = 1), the prescaler will be cleared if assigned.

3: If the Program Counter (PC) is modified or a conditional test is true, the instruction requires two cycles. The second cycle is executed as a `NOP`.

4: Some instructions are two-word instructions. The second word of these instructions will be executed as a `NOP` unless the first word of the instruction retrieves the information embedded in these 16 bits. This ensures that all program memory locations have a valid instruction.

TABLE 28-2: PIC18F46J50 FAMILY INSTRUCTION SET (CONTINUED)

Mnemonic, Operands	Description	Cycles	16-Bit Instruction Word MSb LSb	Status Affected	Notes
LITERAL OPERATIONS					
ADDLW k	Add Literal and WREG	1	0000 1111 kkkk kkkk	C, DC, Z, OV, N	
ANDLW k	AND Literal with WREG	1	0000 1011 kkkk kkkk	Z, N	
IORLW k	Inclusive OR Literal with WREG	1	0000 1001 kkkk kkkk	Z, N	
LFSR f, k	Move Literal (12-bit) 2nd word to FSR(f) 1st word	2	1110 1110 00ff kkkk 1111 0000 kkkk kkkk	None	
MOVLB k	Move Literal to BSR<3:0>	1	0000 0001 0000 kkkk	None	
MOVLW k	Move Literal to WREG	1	0000 1110 kkkk kkkk	None	
MULLW k	Multiply Literal with WREG	1	0000 1101 kkkk kkkk	None	
RETLW k	Return with Literal in WREG	2	0000 1100 kkkk kkkk	None	
SUBLW k	Subtract WREG from Literal	1	0000 1000 kkkk kkkk	C, DC, Z, OV, N	
XORLW k	Exclusive OR Literal with WREG	1	0000 1010 kkkk kkkk	Z, N	
DATA MEMORY ↔ PROGRAM MEMORY OPERATIONS					
TBLRD*	Table Read	2	0000 0000 0000 1000	None	
TBLRD*+	Table Read with Post-Increment		0000 0000 0000 1001	None	
TBLRD*-	Table Read with Post-Decrement		0000 0000 0000 1010	None	
TBLRD+*	Table Read with Pre-Increment		0000 0000 0000 1011	None	
TBLWT*	Table Write	2	0000 0000 0000 1100	None	
TBLWT*+	Table Write with Post-Increment		0000 0000 0000 1101	None	
TBLWT*-	Table Write with Post-Decrement		0000 0000 0000 1110	None	
TBLWT+*	Table Write with Pre-Increment		0000 0000 0000 1111	None	

Note 1: When a PORT register is modified as a function of itself (e.g., `MOVF PORTB, 1, 0`), the value used will be that value present on the pins themselves. For example, if the data latch is '1' for a pin configured as input and is driven low by an external device, the data will be written back with a '0'.

2: If this instruction is executed on the TMR0 register (and, where applicable, d = 1), the prescaler will be cleared if assigned.

3: If the Program Counter (PC) is modified or a conditional test is true, the instruction requires two cycles. The second cycle is executed as a NOP.

4: Some instructions are two-word instructions. The second word of these instructions will be executed as a NOP unless the first word of the instruction retrieves the information embedded in these 16 bits. This ensures that all program memory locations have a valid instruction.

© 2011 Microchip Technology Inc.

28.1.1 STANDARD INSTRUCTION SET

ADDLW **ADD Literal to W**

Syntax: ADDLW k

Operands: $0 \le k \le 255$

Operation: $(W) + k \rightarrow W$

Status Affected: N, OV, C, DC, Z

Encoding:

0000	1111	kkkk	kkkk

Description: The contents of W are added to the 8-bit literal ‘k’ and the result is placed in W.

Words: 1

Cycles: 1

Q Cycle Activity:

Q1	Q2	Q3	Q4
Decode	Read literal ‘k’	Process Data	Write to W

Example: ADDLW 0x15

Before Instruction
W = 10h
After Instruction
W = 25h

ADDWF **ADD W to f**

Syntax: ADDWF f {,d {,a}}

Operands: $0 \le f \le 255$
$d \in [0,1]$
$a \in [0,1]$

Operation: $(W) + (f) \rightarrow$ dest

Status Affected: N, OV, C, DC, Z

Encoding:

0010	01da	ffff	ffff

Description: Add W to register ‘f’. If ‘d’ is ‘0’, the result is stored in W. If ‘d’ is ‘1’, the result is stored back in register ‘f’ (default).

If ‘a’ is ‘0’, the Access Bank is selected. If ‘a’ is ‘1’, the BSR is used to select the GPR bank (default).

If ‘a’ is ‘0’ and the extended instruction set is enabled, this instruction operates in Indexed Literal Offset Addressing mode whenever $f \le 95$ (5Fh). See **Section 28.2.3 “Byte-Oriented and Bit-Oriented Instructions in Indexed Literal Offset Mode”** for details.

Words: 1

Cycles: 1

Q Cycle Activity:

Q1	Q2	Q3	Q4
Decode	Read register ‘f’	Process Data	Write to destination

Example: ADDWF REG, 0, 0

Before Instruction
W = 17h
REG = 0C2h
After Instruction
W = 0D9h
REG = 0C2h

Note: All PIC18 instructions may take an optional label argument preceding the instruction mnemonic for use in symbolic addressing. If a label is used, the instruction format then becomes: {label} instruction argument(s).

ADDWFC **ADD W and Carry bit to f**

Syntax: ADDWFC f {,d {,a}}

Operands: $0 \le f \le 255$
$d \in [0,1]$
$a \in [0,1]$

Operation: (W) + (f) + (C) → dest

Status Affected: N,OV, C, DC, Z

Encoding:

0010	00da	ffff	ffff

Description: Add W, the Carry flag and data memory location, 'f'. If 'd' is '0', the result is placed in W. If 'd' is '1', the result is placed in data memory location 'f'.

If 'a' is '0', the Access Bank is selected. If 'a' is '1', the BSR is used to select the GPR bank (default).

If 'a' is '0' and the extended instruction set is enabled, this instruction operates in Indexed Literal Offset Addressing mode whenever $f \le 95$ (5Fh). See **Section 28.2.3 "Byte-Oriented and Bit-Oriented Instructions in Indexed Literal Offset Mode"** for details.

Words: 1

Cycles: 1

Q Cycle Activity:

Q1	Q2	Q3	Q4
Decode	Read register 'f'	Process Data	Write to destination

Example: ADDWFC REG, 0, 1

Before Instruction
Carry bit = 1
REG = 02h
W = 4Dh
After Instruction
Carry bit = 0
REG = 02h
W = 50h

ANDLW **AND Literal with W**

Syntax: ANDLW k

Operands: $0 \le k \le 255$

Operation: (W) .AND. k → W

Status Affected: N, Z

Encoding:

0000	1011	kkkk	kkkk

Description: The contents of W are ANDed with the 8-bit literal 'k'. The result is placed in W.

Words: 1

Cycles: 1

Q Cycle Activity:

Q1	Q2	Q3	Q4
Decode	Read literal 'k'	Process Data	Write to W

Example: ANDLW 0x5F

Before Instruction
W = A3h
After Instruction
W = 03h

© 2011 Microchip Technology Inc.

ANDWF **AND W with f**

Syntax: ANDWF f {,d {,a}}

Operands: $0 \le f \le 255$
$d \in [0,1]$
$a \in [0,1]$

Operation: (W) .AND. (f) → dest

Status Affected: N, Z

Encoding:

0001	01da	ffff	ffff

Description: The contents of W are ANDed with register, 'f'. If 'd' is '0', the result is stored in W. If 'd' is '1', the result is stored back in register 'f' (default).

If 'a' is '0', the Access Bank is selected. If 'a' is '1', the BSR is used to select the GPR bank (default).

If 'a' is '0' and the extended instruction set is enabled, this instruction operates in Indexed Literal Offset Addressing mode whenever $f \le 95$ (5Fh). See **Section 28.2.3 "Byte-Oriented and Bit-Oriented Instructions in Indexed Literal Offset Mode"** for details.

Words: 1

Cycles: 1

Q Cycle Activity:

Q1	Q2	Q3	Q4
Decode	Read register 'f'	Process Data	Write to destination

Example: `ANDWF REG, 0, 0`

Before Instruction
W = 17h
REG = C2h
After Instruction
W = 02h
REG = C2h

BC **Branch if Carry**

Syntax: BC n

Operands: $-128 \le n \le 127$

Operation: if Carry bit is '1',
(PC) + 2 + 2n → PC

Status Affected: None

Encoding:

1110	0010	nnnn	nnnn

Description: If the Carry bit is '1', then the program will branch.

The 2's complement number, '2n', is added to the PC. Since the PC will have incremented to fetch the next instruction, the new address will be PC + 2 + 2n. This instruction is then a two-cycle instruction.

Words: 1

Cycles: 1(2)

Q Cycle Activity:
If Jump:

Q1	Q2	Q3	Q4
Decode	Read literal 'n'	Process Data	Write to PC
No operation	No operation	No operation	No operation

If No Jump:

Q1	Q2	Q3	Q4
Decode	Read literal 'n'	Process Data	No operation

Example: `HERE BC 5`

Before Instruction
PC = address (HERE)
After Instruction
If Carry = 1;
PC = address (HERE + 12)
If Carry = 0;
PC = address (HERE + 2)

BCF **Bit Clear f**

Syntax: BCF f, b {,a}

Operands: $0 \le f \le 255$
$0 \le b \le 7$
$a \in [0,1]$

Operation: $0 \rightarrow f<b>$

Status Affected: None

Encoding:

1001	bbba	ffff	ffff

Description: Bit 'b' in register, 'f', is cleared.

If 'a' is '0', the Access Bank is selected. If 'a' is '1', the BSR is used to select the GPR bank (default).

If 'a' is '0' and the extended instruction set is enabled, this instruction operates in Indexed Literal Offset Addressing mode whenever $f \le 95$ (5Fh). See **Section 28.2.3 "Byte-Oriented and Bit-Oriented Instructions in Indexed Literal Offset Mode"** for details.

Words: 1

Cycles: 1

Q Cycle Activity:

Q1	Q2	Q3	Q4
Decode	Read register 'f'	Process Data	Write register 'f'

Example: `BCF FLAG_REG, 7, 0`

Before Instruction
FLAG_REG = C7h
After Instruction
FLAG_REG = 47h

BN **Branch if Negative**

Syntax: BN n

Operands: $-128 \le n \le 127$

Operation: if Negative bit is '1',
$(PC) + 2 + 2n \rightarrow PC$

Status Affected: None

Encoding:

1110	0110	nnnn	nnnn

Description: If the Negative bit is '1', then the program will branch.

The 2's complement number,'2n', is added to the PC. Since the PC will have incremented to fetch the next instruction, the new address will be PC + 2 + 2n. This instruction is then a two-cycle instruction.

Words: 1

Cycles: 1(2)

Q Cycle Activity:
If Jump:

Q1	Q2	Q3	Q4
Decode	Read literal 'n'	Process Data	Write to PC
No operation	No operation	No operation	No operation

If No Jump:

Q1	Q2	Q3	Q4
Decode	Read literal 'n'	Process Data	No operation

Example:
```
HERE    BN   Jump
```
Before Instruction
PC = address (HERE)
After Instruction
If Negative = 1;
PC = address (Jump)
If Negative = 0;
PC = address (HERE + 2)

© 2011 Microchip Technology Inc.

BNC **Branch if Not Carry**

Syntax: BNC n

Operands: -128 ≤ n ≤ 127

Operation: if Carry bit is '0',
(PC) + 2 + 2n → PC

Status Affected: None

Encoding:

1110	0011	nnnn	nnnn

Description: If the Carry bit is '0', then the program will branch.

The 2's complement number, '2n', is added to the PC. Since the PC will have incremented to fetch the next instruction, the new address will be PC + 2 + 2n. This instruction is then a two-cycle instruction.

Words: 1

Cycles: 1(2)

Q Cycle Activity:

If Jump:

Q1	Q2	Q3	Q4
Decode	Read literal 'n'	Process Data	Write to PC
No operation	No operation	No operation	No operation

If No Jump:

Q1	Q2	Q3	Q4
Decode	Read literal 'n'	Process Data	No operation

Example: HERE BNC Jump

Before Instruction
PC = address (HERE)
After Instruction
If Carry = 0;
PC = address (Jump)
If Carry = 1;
PC = address (HERE + 2)

BNN **Branch if Not Negative**

Syntax: BNN n

Operands: -128 ≤ n ≤ 127

Operation: if Negative bit is '0',
(PC) + 2 + 2n → PC

Status Affected: None

Encoding:

1110	0111	nnnn	nnnn

Description: If the Negative bit is '0', then the program will branch.

The 2's complement number, '2n', is added to the PC. Since the PC will have incremented to fetch the next instruction, the new address will be PC + 2 + 2n. This instruction is then a two-cycle instruction.

Words: 1

Cycles: 1(2)

Q Cycle Activity:

If Jump:

Q1	Q2	Q3	Q4
Decode	Read literal 'n'	Process Data	Write to PC
No operation	No operation	No operation	No operation

If No Jump:

Q1	Q2	Q3	Q4
Decode	Read literal 'n'	Process Data	No operation

Example: HERE BNN Jump

Before Instruction
PC = address (HERE)
After Instruction
If Negative = 0;
PC = address (Jump)
If Negative = 1;
PC = address (HERE + 2)

BNOV **Branch if Not Overflow**

Syntax: BNOV n

Operands: -128 ≤ n ≤ 127

Operation: if Overflow bit is '0',
(PC) + 2 + 2n → PC

Status Affected: None

Encoding:

1110	0101	nnnn	nnnn

Description: If the Overflow bit is '0', then the program will branch.

The 2's complement number, '2n', is added to the PC. Since the PC will have incremented to fetch the next instruction, the new address will be PC + 2 + 2n. This instruction is then a two-cycle instruction.

Words: 1

Cycles: 1(2)

Q Cycle Activity:

If Jump:

Q1	Q2	Q3	Q4
Decode	Read literal 'n'	Process Data	Write to PC
No operation	No operation	No operation	No operation

If No Jump:

Q1	Q2	Q3	Q4
Decode	Read literal 'n'	Process Data	No operation

Example: HERE BNOV Jump

Before Instruction
PC = address (HERE)
After Instruction
If Overflow = 0;
PC = address (Jump)
If Overflow = 1;
PC = address (HERE + 2)

BNZ **Branch if Not Zero**

Syntax: BNZ n

Operands: -128 ≤ n ≤ 127

Operation: if Zero bit is '0',
(PC) + 2 + 2n → PC

Status Affected: None

Encoding:

1110	0001	nnnn	nnnn

Description: If the Zero bit is '0', then the program will branch.

The 2's complement number, '2n', is added to the PC. Since the PC will have incremented to fetch the next instruction, the new address will be PC + 2 + 2n. This instruction is then a two-cycle instruction.

Words: 1

Cycles: 1(2)

Q Cycle Activity:

If Jump:

Q1	Q2	Q3	Q4
Decode	Read literal 'n'	Process Data	Write to PC
No operation	No operation	No operation	No operation

If No Jump:

Q1	Q2	Q3	Q4
Decode	Read literal 'n'	Process Data	No operation

Example: HERE BNZ Jump

Before Instruction
PC = address (HERE)
After Instruction
If Zero = 0;
PC = address (Jump)
If Zero = 1;
PC = address (HERE + 2)

© 2011 Microchip Technology Inc.

BRA **Unconditional Branch**

Syntax: BRA n

Operands: -1024 ≤ n ≤ 1023

Operation: (PC) + 2 + 2n → PC

Status Affected: None

Encoding:

1101	0nnn	nnnn	nnnn

Description: Add the 2's complement number, '2n', to the PC. Since the PC will have incremented to fetch the next instruction, the new address will be PC + 2 + 2n. This instruction is a two-cycle instruction.

Words: 1

Cycles: 2

Q Cycle Activity:

Q1	Q2	Q3	Q4
Decode	Read literal 'n'	Process Data	Write to PC
No operation	No operation	No operation	No operation

Example: HERE BRA Jump

Before Instruction
PC = address (HERE)
After Instruction
PC = address (Jump)

BSF **Bit Set f**

Syntax: BSF f, b {,a}

Operands: 0 ≤ f ≤ 255
0 ≤ b ≤ 7
a ∈ [0,1]

Operation: 1 → f<b>

Status Affected: None

Encoding:

1000	bbba	ffff	ffff

Description: Bit 'b' in register, 'f', is set.

If 'a' is '0', the Access Bank is selected. If 'a' is '1', the BSR is used to select the GPR bank (default).

If 'a' is '0' and the extended instruction set is enabled, this instruction operates in Indexed Literal Offset Addressing mode whenever f ≤ 95 (5Fh). See **Section 28.2.3 "Byte-Oriented and Bit-Oriented Instructions in Indexed Literal Offset Mode"** for details.

Words: 1

Cycles: 1

Q Cycle Activity:

Q1	Q2	Q3	Q4
Decode	Read register 'f'	Process Data	Write register 'f'

Example: BSF FLAG_REG, 7, 1

Before Instruction
FLAG_REG = 0Ah
After Instruction
FLAG_REG = 8Ah

BTFSC **Bit Test File, Skip if Clear**

Syntax: BTFSC f, b {,a}

Operands: $0 \le f \le 255$
$0 \le b \le 7$
$a \in [0,1]$

Operation: skip if (f<b>) = 0

Status Affected: None

Encoding:

1011	bbba	ffff	ffff

Description: If bit 'b' in register, 'f', is '0', then the next instruction is skipped. If bit, 'b', is '0', then the next instruction fetched during the current instruction execution is discarded and a NOP is executed instead, making this a two-cycle instruction.

If 'a' is '0', the Access Bank is selected. If 'a' is '1', the BSR is used to select the GPR bank (default).

If 'a' is '0' and the extended instruction set is enabled, this instruction operates in Indexed Literal Offset Addressing mode whenever $f \le 95$ (5Fh). See **Section 28.2.3 "Byte-Oriented and Bit-Oriented Instructions in Indexed Literal Offset Mode"** for details.

Words: 1

Cycles: 1(2)
Note: 3 cycles if skip and followed by a 2-word instruction.

Q Cycle Activity:

Q1	Q2	Q3	Q4
Decode	Read register 'f'	Process Data	No operation

If skip:

Q1	Q2	Q3	Q4
No operation	No operation	No operation	No operation

If skip and followed by 2-word instruction:

Q1	Q2	Q3	Q4
No operation	No operation	No operation	No operation
No operation	No operation	No operation	No operation

Example:
```
HERE    BTFSC   FLAG, 1, 0
FALSE   :
TRUE    :
```

Before Instruction
PC = address (HERE)
After Instruction
If FLAG<1> = 0;
PC = address (TRUE)
If FLAG<1> = 1;
PC = address (FALSE)

BTFSS **Bit Test File, Skip if Set**

Syntax: BTFSS f, b {,a}

Operands: $0 \le f \le 255$
$0 \le b < 7$
$a \in [0,1]$

Operation: skip if (f<b>) = 1

Status Affected: None

Encoding:

1010	bbba	ffff	ffff

Description: If bit 'b' in register, 'f', is '1', then the next instruction is skipped. If bit, 'b', is '1', then the next instruction fetched during the current instruction execution is discarded and a NOP is executed instead, making this a two-cycle instruction.

If 'a' is '0', the Access Bank is selected. If 'a' is '1', the BSR is used to select the GPR bank (default).

If 'a' is '0' and the extended instruction set is enabled, this instruction operates in Indexed Literal Offset Addressing mode whenever $f \le 95$ (5Fh). See **Section 28.2.3 "Byte-Oriented and Bit-Oriented Instructions in Indexed Literal Offset Mode"** for details.

Words: 1

Cycles: 1(2)
Note: 3 cycles if skip and followed by a 2-word instruction.

Q Cycle Activity:

Q1	Q2	Q3	Q4
Decode	Read register 'f'	Process Data	No operation

If skip:

Q1	Q2	Q3	Q4
No operation	No operation	No operation	No operation

If skip and followed by 2-word instruction:

Q1	Q2	Q3	Q4
No operation	No operation	No operation	No operation
No operation	No operation	No operation	No operation

Example:
```
HERE    BTFSS   FLAG, 1, 0
FALSE   :
TRUE    :
```

Before Instruction
PC = address (HERE)
After Instruction
If FLAG<1> = 0;
PC = address (FALSE)
If FLAG<1> = 1;
PC = address (TRUE)

© 2011 Microchip Technology Inc.

BTG **Bit Toggle f**

Syntax: BTG f, b {,a}

Operands: $0 \le f \le 255$
$0 \le b < 7$
$a \in [0,1]$

Operation: $(\overline{f<b>}) \rightarrow f<b>$

Status Affected: None

Encoding:

0111	bbba	ffff	ffff

Description: Bit ‘b’ in data memory location, ‘f’, is inverted.

If ‘a’ is ‘0’, the Access Bank is selected. If ‘a’ is ‘1’, the BSR is used to select the GPR bank (default).

If ‘a’ is ‘0’ and the extended instruction set is enabled, this instruction operates in Indexed Literal Offset Addressing mode whenever $f \le 95$ (5Fh). See **Section 28.2.3 “Byte-Oriented and Bit-Oriented Instructions in Indexed Literal Offset Mode”** for details.

Words: 1

Cycles: 1

Q Cycle Activity:

Q1	Q2	Q3	Q4
Decode	Read register ‘f’	Process Data	Write register ‘f’

Example: `BTG LATC, 4, 0`

Before Instruction:
LATC = 0111 0101 [75h]
After Instruction:
LATC = 0110 0101 [65h]

BOV **Branch if Overflow**

Syntax: BOV n

Operands: $-128 \le n \le 127$

Operation: if Overflow bit is ‘1’,
$(PC) + 2 + 2n \rightarrow PC$

Status Affected: None

Encoding:

1110	0100	nnnn	nnnn

Description: If the Overflow bit is ‘1’, then the program will branch.

The 2’s complement number, ‘2n’, is added to the PC. Since the PC will have incremented to fetch the next instruction, the new address will be PC + 2 + 2n. This instruction is then a two-cycle instruction.

Words: 1

Cycles: 1(2)

Q Cycle Activity:
If Jump:

Q1	Q2	Q3	Q4
Decode	Read literal ‘n’	Process Data	Write to PC
No operation	No operation	No operation	No operation

If No Jump:

Q1	Q2	Q3	Q4
Decode	Read literal ‘n’	Process Data	No operation

Example:
```
HERE    BOV   Jump
```
Before Instruction
PC = address (HERE)
After Instruction
If Overflow = 1;
PC = address (Jump)
If Overflow = 0;
PC = address (HERE + 2)

BZ **Branch if Zero**

Syntax: BZ n

Operands: $-128 \le n \le 127$

Operation: if Zero bit is '1',
(PC) + 2 + 2n → PC

Status Affected: None

Encoding:

1110	0000	nnnn	nnnn

Description: If the Zero bit is '1', then the program will branch.

The 2's complement number, '2n', is added to the PC. Since the PC will have incremented to fetch the next instruction, the new address will be PC + 2 + 2n. This instruction is then a two-cycle instruction.

Words: 1

Cycles: 1(2)

Q Cycle Activity:

If Jump:

Q1	Q2	Q3	Q4
Decode	Read literal 'n'	Process Data	Write to PC
No operation	No operation	No operation	No operation

If No Jump:

Q1	Q2	Q3	Q4
Decode	Read literal 'n'	Process Data	No operation

Example: HERE BZ Jump

```
Before Instruction
    PC          =   address (HERE)
After Instruction
    If Zero     =   1;
        PC      =   address (Jump)
    If Zero     =   0;
        PC      =   address (HERE + 2)
```

CALL **Subroutine Call**

Syntax: CALL k {,s}

Operands: $0 \le k \le 1048575$
$s \in [0,1]$

Operation: (PC) + 4 → TOS,
k → PC<20:1>;
if s = 1,
(W) → WS,
(STATUS) → STATUSS,
(BSR) → BSRS

Status Affected: None

Encoding:

1st word (k<7:0>)	1110	110s	$k_7$kkk	kkkk$_0$
2nd word(k<19:8>)	1111	k_{19}kkk	kkkk	kkkk$_8$

Description: Subroutine call of entire 2-Mbyte memory range. First, return address (PC + 4) is pushed onto the return stack. If 's' = 1, the W, STATUS and BSR
registers are also pushed into their respective shadow registers, WS, STATUSS and BSRS. If 's' = 0, no update occurs (default). Then, the 20-bit value 'k' is loaded into PC<20:1>. CALL is a two-cycle instruction.

Words: 2

Cycles: 2

Q Cycle Activity:

Q1	Q2	Q3	Q4
Decode	Read literal 'k'<7:0>,	Push PC to stack	Read literal 'k'<19:8>, Write to PC
No operation	No operation	No operation	No operation

Example: HERE CALL THERE,1

```
Before Instruction
    PC      =   address (HERE)
After Instruction
    PC      =   address (THERE)
    TOS     =   address (HERE + 4)
    WS      =   W
    BSRS    =   BSR
    STATUSS =   STATUS
```


© 2011 Microchip Technology Inc.

CLRF **Clear f**

Syntax: CLRF f {,a}

Operands: $0 \le f \le 255$
$a \in [0,1]$

Operation: 000h → f,
1 → Z

Status Affected: Z

Encoding:

0110	101a	ffff	ffff

Description: Clears the contents of the specified register.

If 'a' is '0', the Access Bank is selected. If 'a' is '1', the BSR is used to select the GPR bank (default).

If 'a' is '0' and the extended instruction set is enabled, this instruction operates in Indexed Literal Offset Addressing mode whenever $f \le 95$ (5Fh). See **Section 28.2.3 "Byte-Oriented and Bit-Oriented Instructions in Indexed Literal Offset Mode"** for details.

Words: 1

Cycles: 1

Q Cycle Activity:

Q1	Q2	Q3	Q4
Decode	Read register 'f'	Process Data	Write register 'f'

Example: CLRF FLAG_REG,1

Before Instruction
FLAG_REG = 5Ah
After Instruction
FLAG_REG = 00h

CLRWDT **Clear Watchdog Timer**

Syntax: CLRWDT

Operands: None

Operation: 000h → WDT,
000h → WDT postscaler,
1 → $\overline{TO}$,
1 → $\overline{PD}$

Status Affected: $\overline{TO}$, $\overline{PD}$

Encoding:

0000	0000	0000	0100

Description: CLRWDT instruction resets the Watchdog Timer. It also resets the postscaler of the WDT. Status bits, $\overline{TO}$ and $\overline{PD}$, are set.

Words: 1

Cycles: 1

Q Cycle Activity:

Q1	Q2	Q3	Q4
Decode	No operation	Process Data	No operation

Example: CLRWDT

Before Instruction
WDT Counter = ?
After Instruction
WDT Counter = 00h
WDT Postscaler = 0
$\overline{TO}$ = 1
$\overline{PD}$ = 1

COMF **Complement f**

Syntax: COMF f {,d {,a}}

Operands: $0 \le f \le 255$
$d \in [0,1]$
$a \in [0,1]$

Operation: $\bar{f} \rightarrow$ dest

Status Affected: N, Z

Encoding:

0001	11da	ffff	ffff

Description: The contents of register, 'f', are complemented. If 'd' is '0', the result is stored in W. If 'd' is '1', the result is stored back in register, 'f' (default).

If 'a' is '0', the Access Bank is selected. If 'a' is '1', the BSR is used to select the GPR bank (default).

If 'a' is '0' and the extended instruction set is enabled, this instruction operates in Indexed Literal Offset Addressing mode whenever $f \le 95$ (5Fh). See **Section 28.2.3 "Byte-Oriented and Bit-Oriented Instructions in Indexed Literal Offset Mode"** for details.

Words: 1

Cycles: 1

Q Cycle Activity:

Q1	Q2	Q3	Q4
Decode	Read register 'f'	Process Data	Write to destination

Example: `COMF REG, 0, 0`

Before Instruction
REG = 13h
After Instruction
REG = 13h
W = ECh

CPFSEQ **Compare f with W, Skip if f = W**

Syntax: CPFSEQ f {,a}

Operands: $0 \le f \le 255$
$a \in [0,1]$

Operation: (f) – (W),
skip if (f) = (W)
(unsigned comparison)

Status Affected: None

Encoding:

0110	001a	ffff	ffff

Description: Compares the contents of data memory location, 'f', to the contents of W by performing an unsigned subtraction.

If 'f' = W, then the fetched instruction is discarded and a NOP is executed instead, making this a two-cycle instruction.

If 'a' is '0', the Access Bank is selected. If 'a' is '1', the BSR is used to select the GPR bank (default).

If 'a' is '0' and the extended instruction set is enabled, this instruction operates in Indexed Literal Offset Addressing mode whenever $f \le 95$ (5Fh). See **Section 28.2.3 "Byte-Oriented and Bit-Oriented Instructions in Indexed Literal Offset Mode"** for details.

Words: 1

Cycles: 1(2)
Note: 3 cycles if skip and followed by a 2-word instruction.

Q Cycle Activity:

Q1	Q2	Q3	Q4
Decode	Read register 'f'	Process Data	No operation

If skip:

Q1	Q2	Q3	Q4
No operation	No operation	No operation	No operation

If skip and followed by 2-word instruction:

Q1	Q2	Q3	Q4
No operation	No operation	No operation	No operation
No operation	No operation	No operation	No operation

Example:
```
HERE    CPFSEQ REG, 0
NEQUAL  :
EQUAL   :
```

Before Instruction
PC Address = HERE
W = ?
REG = ?
After Instruction
If REG = W;
PC = Address (EQUAL)
If REG ≠ W;
PC = Address (NEQUAL)

© 2011 Microchip Technology Inc.

CPFSGT **Compare f with W, Skip if f > W**

Syntax: CPFSGT f {,a}

Operands: $0 \le f \le 255$
$a \in [0,1]$

Operation: (f) – (W),
skip if (f) > (W)
(unsigned comparison)

Status Affected: None

Encoding:

0110	010a	ffff	ffff

Description: Compares the contents of data memory location, 'f', to the contents of the W by performing an unsigned subtraction.

If the contents of 'f' are greater than the contents of WREG, then the fetched instruction is discarded and a NOP is executed instead, making this a two-cycle instruction.

If 'a' is '0', the Access Bank is selected. If 'a' is '1', the BSR is used to select the GPR bank (default).

If 'a' is '0' and the extended instruction set is enabled, this instruction operates in Indexed Literal Offset Addressing mode whenever $f \le 95$ (5Fh). See **Section 28.2.3 "Byte-Oriented and Bit-Oriented Instructions in Indexed Literal Offset Mode"** for details.

Words: 1

Cycles: 1(2)
Note: 3 cycles if skip and followed by a 2-word instruction.

Q Cycle Activity:

Q1	Q2	Q3	Q4
Decode	Read register 'f'	Process Data	No operation

If skip:

Q1	Q2	Q3	Q4
No operation	No operation	No operation	No operation

If skip and followed by 2-word instruction:

Q1	Q2	Q3	Q4
No operation	No operation	No operation	No operation
No operation	No operation	No operation	No operation

Example:
```
HERE      CPFSGT REG, 0
NGREATER  :
GREATER   :
```
Before Instruction
PC = Address (HERE)
W = ?
After Instruction
If REG > W;
PC = Address (GREATER)
If REG ≤ W;
PC = Address (NGREATER)

CPFSLT **Compare f with W, Skip if f < W**

Syntax: CPFSLT f {,a}

Operands: $0 \le f \le 255$
$a \in [0,1]$

Operation: (f) – (W),
skip if (f) < (W)
(unsigned comparison)

Status Affected: None

Encoding:

0110	000a	ffff	ffff

Description: Compares the contents of data memory location, 'f', to the contents of W by performing an unsigned subtraction.

If the contents of 'f' are less than the contents of W, then the fetched instruction is discarded and a NOP is executed instead, making this a two-cycle instruction.

If 'a' is '0', the Access Bank is selected. If 'a' is '1', the BSR is used to select the GPR bank (default).

Words: 1

Cycles: 1(2)
Note: 3 cycles if skip and followed by a 2-word instruction.

Q Cycle Activity:

Q1	Q2	Q3	Q4
Decode	Read register 'f'	Process Data	No operation

If skip:

Q1	Q2	Q3	Q4
No operation	No operation	No operation	No operation

If skip and followed by 2-word instruction:

Q1	Q2	Q3	Q4
No operation	No operation	No operation	No operation
No operation	No operation	No operation	No operation

Example:
```
HERE    CPFSLT REG, 1
NLESS   :
LESS    :
```
Before Instruction
PC = Address (HERE)
W = ?
After Instruction
If REG < W;
PC = Address (LESS)
If REG ≥ W;
PC = Address (NLESS)

DAW **Decimal Adjust W Register**

Syntax: DAW

Operands: None

Operation: If [W<3:0> > 9] or [DC = 1] then,
(W<3:0>) + 6 → W<3:0>;
else,
(W<3:0>) → W<3:0>

If [W<7:4> > 9] or [C = 1] then,
(W<7:4>) + 6 → W<7:4>,
C = 1;
else,
(W<7:4>) → W<7:4>

Status Affected: C

Encoding:

0000	0000	0000	0111

Description: DAW adjusts the eight-bit value in W, resulting from the earlier addition of two variables (each in packed BCD format) and produces a correct packed BCD result.

Words: 1

Cycles: 1

Q Cycle Activity:

Q1	Q2	Q3	Q4
Decode	Read register W	Process Data	Write W

Example 1: DAW

Before Instruction
W = A5h
C = 0
DC = 0
After Instruction
W = 05h
C = 1
DC = 0

Example 2:

Before Instruction
W = CEh
C = 0
DC = 0
After Instruction
W = 34h
C = 1
DC = 0

DECF **Decrement f**

Syntax: DECF f {,d {,a}}

Operands: 0 ≤ f ≤ 255
d ∈ [0,1]
a ∈ [0,1]

Operation: (f) – 1 → dest

Status Affected: C, DC, N, OV, Z

Encoding:

0000	01da	ffff	ffff

Description: Decrement register, 'f'. If 'd' is '0', the result is stored in W. If 'd' is '1', the result is stored back in register, 'f' (default).

If 'a' is '0', the Access Bank is selected. If 'a' is '1', the BSR is used to select the GPR bank (default).

If 'a' is '0' and the extended instruction set is enabled, this instruction operates in Indexed Literal Offset Addressing mode whenever f ≤ 95 (5Fh). See **Section 28.2.3 "Byte-Oriented and Bit-Oriented Instructions in Indexed Literal Offset Mode"** for details.

Words: 1

Cycles: 1

Q Cycle Activity:

Q1	Q2	Q3	Q4
Decode	Read register 'f'	Process Data	Write to destination

Example: DECF CNT, 1, 0

Before Instruction
CNT = 01h
Z = 0
After Instruction
CNT = 00h
Z = 1

© 2011 Microchip Technology Inc.

DECFSZ **Decrement f, Skip if 0**

Syntax: DECFSZ f {,d {,a}}

Operands: $0 \le f \le 255$
$d \in [0,1]$
$a \in [0,1]$

Operation: (f) – 1 → dest,
skip if result = 0

Status Affected: None

Encoding:

0010	11da	ffff	ffff

Description: The contents of register, 'f', are decremented. If 'd' is '0', the result is placed in W. If 'd' is '1', the result is placed back in register 'f' (default).

If the result is '0', the next instruction which is already fetched is discarded and a NOP is executed instead, making it a two-cycle instruction.

If 'a' is '0', the Access Bank is selected. If 'a' is '1', the BSR is used to select the GPR bank (default).

If 'a' is '0' and the extended instruction set is enabled, this instruction operates in Indexed Literal Offset Addressing mode whenever f ≤ 95 (5Fh). See **Section 28.2.3 "Byte-Oriented and Bit-Oriented Instructions in Indexed Literal Offset Mode"** for details.

Words: 1

Cycles: 1(2)
Note: 3 cycles if skip and followed by a 2-word instruction.

Q Cycle Activity:

Q1	Q2	Q3	Q4
Decode	Read register 'f'	Process Data	Write to destination

If skip:

Q1	Q2	Q3	Q4
No operation	No operation	No operation	No operation

If skip and followed by 2-word instruction:

Q1	Q2	Q3	Q4
No operation	No operation	No operation	No operation
No operation	No operation	No operation	No operation

Example:
```
HERE    DECFSZ  CNT, 1, 1
        GOTO    LOOP
CONTINUE
```
Before Instruction
PC = Address (HERE)
After Instruction
CNT = CNT – 1
If CNT = 0;
PC = Address (CONTINUE)
If CNT ≠ 0;
PC = Address (HERE + 2)

DCFSNZ **Decrement f, Skip if not 0**

Syntax: DCFSNZ f {,d {,a}}

Operands: $0 \le f \le 255$
$d \in [0,1]$
$a \in [0,1]$

Operation: (f) – 1 → dest,
skip if result ≠ 0

Status Affected: None

Encoding:

0100	11da	ffff	ffff

Description: The contents of register, 'f', are decremented. If 'd' is '0', the result is placed in W. If 'd' is '1', the result is placed back in register 'f' (default).

If the result is not '0', the next instruction which is already fetched is discarded and a NOP is executed instead, making it a two-cycle instruction.

If 'a' is '0', the Access Bank is selected. If 'a' is '1', the BSR is used to select the GPR bank (default).

If 'a' is '0' and the extended instruction set is enabled, this instruction operates in Indexed Literal Offset Addressing mode whenever f ≤ 95 (5Fh). See **Section 28.2.3 "Byte-Oriented and Bit-Oriented Instructions in Indexed Literal Offset Mode"** for details.

Words: 1

Cycles: 1(2)
Note: 3 cycles if skip and followed by a 2-word instruction.

Q Cycle Activity:

Q1	Q2	Q3	Q4
Decode	Read register 'f'	Process Data	Write to destination

If skip:

Q1	Q2	Q3	Q4
No operation	No operation	No operation	No operation

If skip and followed by 2-word instruction:

Q1	Q2	Q3	Q4
No operation	No operation	No operation	No operation
No operation	No operation	No operation	No operation

Example:
```
HERE    DCFSNZ  TEMP, 1, 0
ZERO    :
NZERO   :
```
Before Instruction
TEMP = ?
After Instruction
TEMP = TEMP – 1,
If TEMP = 0;
PC = Address (ZERO)
If TEMP ≠ 0;
PC = Address (NZERO)

© 2011 Microchip Technology Inc.

GOTO **Unconditional Branch**

Syntax: GOTO k

Operands: $0 \le k \le 1048575$

Operation: $k \rightarrow PC<20:1>$

Status Affected: None

Encoding:

1st word (k<7:0>)	1110	1111	k_7kkk	$kkkk_0$
2nd word(k<19:8>)	1111	$k_{19}kkk$	kkkk	$kkkk_8$

Description: GOTO allows an unconditional branch anywhere within entire 2-Mbyte memory range. The 20-bit value 'k' is loaded into PC<20:1>. GOTO is always a two-cycle instruction.

Words: 2

Cycles: 2

Q Cycle Activity:

Q1	Q2	Q3	Q4
Decode	Read literal 'k'<7:0>,	No operation	Read literal 'k'<19:8>, Write to PC
No operation	No operation	No operation	No operation

Example: GOTO THERE

After Instruction
PC = Address (THERE)

INCF **Increment f**

Syntax: INCF f {,d {,a}}

Operands: $0 \le f \le 255$
$d \in [0,1]$
$a \in [0,1]$

Operation: (f) + 1 → dest

Status Affected: C, DC, N, OV, Z

Encoding:

0010	10da	ffff	ffff

Description: The contents of register, 'f', are incremented. If 'd' is '0', the result is placed in W. If 'd' is '1', the result is placed back in register, 'f' (default).

If 'a' is '0', the Access Bank is selected. If 'a' is '1', the BSR is used to select the GPR bank (default).

If 'a' is '0' and the extended instruction set is enabled, this instruction operates in Indexed Literal Offset Addressing mode whenever $f \le 95$ (5Fh). See **Section 28.2.3 "Byte-Oriented and Bit-Oriented Instructions in Indexed Literal Offset Mode"** for details.

Words: 1

Cycles: 1

Q Cycle Activity:

Q1	Q2	Q3	Q4
Decode	Read register 'f'	Process Data	Write to destination

Example: INCF CNT, 1, 0

Before Instruction
CNT = FFh
Z = 0
C = ?
DC = ?
After Instruction
CNT = 00h
Z = 1
C = 1
DC = 1

© 2011 Microchip Technology Inc.

INCFSZ **Increment f, Skip if 0**

Syntax: INCFSZ f {,d {,a}}

Operands: $0 \le f \le 255$
$d \in [0,1]$
$a \in [0,1]$

Operation: (f) + 1 → dest,
skip if result = 0

Status Affected: None

Encoding:

0011	11da	ffff	ffff

Description: The contents of register, 'f', are incremented. If 'd' is '0', the result is placed in W. If 'd' is '1', the result is placed back in register, 'f' (default).

If the result is '0', the next instruction which is already fetched is discarded and a NOP is executed instead, making it a two-cycle instruction.

If 'a' is '0', the Access Bank is selected. If 'a' is '1', the BSR is used to select the GPR bank (default).

If 'a' is '0' and the extended instruction set is enabled, this instruction operates in Indexed Literal Offset Addressing mode whenever f ≤ 95 (5Fh). See **Section 28.2.3 "Byte-Oriented and Bit-Oriented Instructions in Indexed Literal Offset Mode"** for details.

Words: 1

Cycles: 1(2)
Note: 3 cycles if skip and followed by a 2-word instruction.

Q Cycle Activity:

Q1	Q2	Q3	Q4
Decode	Read register 'f'	Process Data	Write to destination

If skip:

Q1	Q2	Q3	Q4
No operation	No operation	No operation	No operation

If skip and followed by 2-word instruction:

Q1	Q2	Q3	Q4
No operation	No operation	No operation	No operation
No operation	No operation	No operation	No operation

Example:
```
HERE    INCFSZ   CNT, 1, 0
NZERO   :
ZERO    :
```
Before Instruction
PC = Address (HERE)
After Instruction
CNT = CNT + 1
If CNT = 0;
PC = Address (ZERO)
If CNT ≠ 0;
PC = Address (NZERO)

INFSNZ **Increment f, Skip if not 0**

Syntax: INFSNZ f {,d {,a}}

Operands: $0 \le f \le 255$
$d \in [0,1]$
$a \in [0,1]$

Operation: (f) + 1 → dest,
skip if result ≠ 0

Status Affected: None

Encoding:

0100	10da	ffff	ffff

Description: The contents of register, 'f', are incremented. If 'd' is '0', the result is placed in W. If 'd' is '1', the result is placed back in register, 'f' (default).

If the result is not '0', the next instruction which is already fetched is discarded and a NOP is executed instead, making it a two-cycle instruction.

If 'a' is '0', the Access Bank is selected. If 'a' is '1', the BSR is used to select the GPR bank (default).

If 'a' is '0' and the extended instruction set is enabled, this instruction operates in Indexed Literal Offset Addressing mode whenever f ≤ 95 (5Fh). See **Section 28.2.3 "Byte-Oriented and Bit-Oriented Instructions in Indexed Literal Offset Mode"** for details.

Words: 1

Cycles: 1(2)
Note: 3 cycles if skip and followed by a 2-word instruction.

Q Cycle Activity:

Q1	Q2	Q3	Q4
Decode	Read register 'f'	Process Data	Write to destination

If skip:

Q1	Q2	Q3	Q4
No operation	No operation	No operation	No operation

If skip and followed by 2-word instruction:

Q1	Q2	Q3	Q4
No operation	No operation	No operation	No operation
No operation	No operation	No operation	No operation

Example:
```
HERE    INFSNZ  REG, 1, 0
ZERO
NZERO
```
Before Instruction
PC = Address (HERE)
After Instruction
REG = REG + 1
If REG ≠ 0;
PC = Address (NZERO)
If REG = 0;
PC = Address (ZERO)

IORLW **Inclusive OR Literal with W**

Syntax: IORLW k

Operands: $0 \le k \le 255$

Operation: (W) .OR. k → W

Status Affected: N, Z

Encoding:

0000	1001	kkkk	kkkk

Description: The contents of W are ORed with the eight-bit literal 'k'. The result is placed in W.

Words: 1

Cycles: 1

Q Cycle Activity:

Q1	Q2	Q3	Q4
Decode	Read literal 'k'	Process Data	Write to W

Example: IORLW 35h

Before Instruction
W = 9Ah
After Instruction
W = BFh

IORWF **Inclusive OR W with f**

Syntax: IORWF f {,d {,a}}

Operands: $0 \le f \le 255$
$d \in [0,1]$
$a \in [0,1]$

Operation: (W) .OR. (f) → dest

Status Affected: N, Z

Encoding:

0001	00da	ffff	ffff

Description: Inclusive OR W with register, 'f'. If 'd' is '0', the result is placed in W. If 'd' is '1', the result is placed back in register, 'f' (default).

If 'a' is '0', the Access Bank is selected. If 'a' is '1', the BSR is used to select the GPR bank (default).

If 'a' is '0' and the extended instruction set is enabled, this instruction operates in Indexed Literal Offset Addressing mode whenever $f \le 95$ (5Fh). See **Section 28.2.3 "Byte-Oriented and Bit-Oriented Instructions in Indexed Literal Offset Mode"** for details.

Words: 1

Cycles: 1

Q Cycle Activity:

Q1	Q2	Q3	Q4
Decode	Read register 'f'	Process Data	Write to destination

Example: IORWF RESULT, 0, 1

Before Instruction
RESULT = 13h
W = 91h
After Instruction
RESULT = 13h
W = 93h

© 2011 Microchip Technology Inc.

LFSR **Load FSR**

Syntax: LFSR f, k

Operands: $0 \le f \le 2$
$0 \le k \le 4095$

Operation: $k \rightarrow FSRf$

Status Affected: None

Encoding:

1110 1111	1110 0000	00ff $k_7$kkk	k_{11}kkk kkkk

Description: The 12-bit literal, 'k', is loaded into the file select register pointed to by 'f'.

Words: 2

Cycles: 2

Q Cycle Activity:

Q1	Q2	Q3	Q4
Decode	Read literal 'k' MSB	Process Data	Write literal 'k' MSB to FSRfH
Decode	Read literal 'k' LSB	Process Data	Write literal 'k' to FSRfL

Example: `LFSR 2, 0x3AB`

After Instruction
FSR2H = 03h
FSR2L = ABh

MOVF **Move f**

Syntax: MOVF f {,d {,a}}

Operands: $0 \le f \le 255$
$d \in [0,1]$
$a \in [0,1]$

Operation: $f \rightarrow dest$

Status Affected: N, Z

Encoding:

0101	00da	ffff	ffff

Description: The contents of register, 'f', are moved to a destination dependent upon the status of 'd'. If 'd' is '0', the result is placed in W. If 'd' is '1', the result is placed back in register, 'f' (default). Location, 'f', can be anywhere in the 256-byte bank.

If 'a' is '0', the Access Bank is selected. If 'a' is '1', the BSR is used to select the GPR bank (default).

If 'a' is '0' and the extended instruction set is enabled, this instruction operates in Indexed Literal Offset Addressing mode whenever $f \le 95$ (5Fh). See **Section 28.2.3 "Byte-Oriented and Bit-Oriented Instructions in Indexed Literal Offset Mode"** for details.

Words: 1

Cycles: 1

Q Cycle Activity:

Q1	Q2	Q3	Q4
Decode	Read register 'f'	Process Data	Write W

Example: `MOVF REG, 0, 0`

Before Instruction
REG = 22h
W = FFh
After Instruction
REG = 22h
W = 22h

MOVFF **Move f to f**

Syntax: MOVFF f_s,f_d

Operands: $0 \le f_s \le 4095$
$0 \le f_d \le 4095$

Operation: $(f_s) \rightarrow f_d$

Status Affected: None

Encoding:

1st word (source)	1100	ffff	ffff	$ffff_s$
2nd word (destin.)	1111	ffff	ffff	$ffff_d$

Description: The contents of source register, 'f_s', are moved to destination register,' f_d'. Location of source 'f_s' can be anywhere in the 4096-byte data space (000h to FFFh) and location of destination, 'f_d', can also be anywhere from 000h to FFFh.

Either source or destination can be W (a useful special situation).

MOVFF is particularly useful for transferring a data memory location to a peripheral register (such as the transmit buffer or an I/O port).

The MOVFF instruction cannot use the PCL, TOSU, TOSH or TOSL as the destination register

Words: 2

Cycles: 2

Q Cycle Activity:

Q1	Q2	Q3	Q4
Decode	Read register 'f' (src)	Process Data	No operation
Decode	No operation No dummy read	No operation	Write register 'f' (dest)

Example:
```
MOVFF   REG1, REG2
```
Before Instruction
REG1 = 33h
REG2 = 11h
After Instruction
REG1 = 33h
REG2 = 33h

MOVLB **Move Literal to Low Nibble in BSR**

Syntax: MOVLB k

Operands: $0 \le k \le 255$

Operation: $k \rightarrow BSR$

Status Affected: None

Encoding:

0000	0001	kkkk	kkkk

Description: The eight-bit literal, 'k', is loaded into the Bank Select Register (BSR). The value of BSR<7:4> always remains '0' regardless of the value of k_7:k_4.

Words: 1

Cycles: 1

Q Cycle Activity:

Q1	Q2	Q3	Q4
Decode	Read literal 'k'	Process Data	Write literal 'k' to BSR

Example:
```
MOVLB   5
```
Before Instruction
BSR Register = 02h
After Instruction
BSR Register = 05h

© 2011 Microchip Technology Inc.

MOVLW **Move Literal to W**

Syntax: MOVLW k

Operands: $0 \le k \le 255$

Operation: $k \rightarrow W$

Status Affected: None

Encoding:

0000	1110	kkkk	kkkk

Description: The eight-bit literal, 'k', is loaded into W.

Words: 1

Cycles: 1

Q Cycle Activity:

Q1	Q2	Q3	Q4
Decode	Read literal 'k'	Process Data	Write to W

Example: `MOVLW 0x5A`

After Instruction
W = 5Ah

MOVWF **Move W to f**

Syntax: MOVWF f {,a}

Operands: $0 \le f \le 255$
$a \in [0,1]$

Operation: $(W) \rightarrow f$

Status Affected: None

Encoding:

0110	111a	ffff	ffff

Description: Move data from W to register, 'f'. Location 'f' can be anywhere in the 256-byte bank.

If 'a' is '0', the Access Bank is selected. If 'a' is '1', the BSR is used to select the GPR bank (default).

If 'a' is '0' and the extended instruction set is enabled, this instruction operates in Indexed Literal Offset Addressing mode whenever $f \le 95$ (5Fh). See **Section 28.2.3 "Byte-Oriented and Bit-Oriented Instructions in Indexed Literal Offset Mode"** for details.

Words: 1

Cycles: 1

Q Cycle Activity:

Q1	Q2	Q3	Q4
Decode	Read register 'f'	Process Data	Write register 'f'

Example: `MOVWF REG, 0`

Before Instruction
W = 4Fh
REG = FFh
After Instruction
W = 4Fh
REG = 4Fh

MULLW **Multiply Literal with W**

Syntax: MULLW k

Operands: $0 \le k \le 255$

Operation: (W) x k → PRODH:PRODL

Status Affected: None

Encoding:

0000	1101	kkkk	kkkk

Description: An unsigned multiplication is carried out between the contents of W and the 8-bit literal 'k'. The 16-bit result is placed in PRODH:PRODL register pair. PRODH contains the high byte.

W is unchanged.

None of the Status flags are affected.

Note that neither Overflow nor Carry is possible in this operation. A Zero result is possible but not detected.

Words: 1

Cycles: 1

Q Cycle Activity:

Q1	Q2	Q3	Q4
Decode	Read literal 'k'	Process Data	Write registers PRODH: PRODL

Example: `MULLW 0xC4`

Before Instruction
W = E2h
PRODH = ?
PRODL = ?
After Instruction
W = E2h
PRODH = ADh
PRODL = 08h

MULWF **Multiply W with f**

Syntax: MULWF f {,a}

Operands: $0 \le f \le 255$
$a \in [0,1]$

Operation: (W) x (f) → PRODH:PRODL

Status Affected: None

Encoding:

0000	001a	ffff	ffff

Description: An unsigned multiplication is carried out between the contents of W and the register file location, 'f'. The 16-bit result is stored in the PRODH:PRODL register pair. PRODH contains the high byte. Both W and 'f' are unchanged.

None of the Status flags are affected.

Note that neither Overflow nor Carry is possible in this operation. A Zero result is possible but not detected.

If 'a' is '0', the Access Bank is selected. If 'a' is '1', the BSR is used to select the GPR bank (default).

If 'a' is '0' and the extended instruction set is enabled, this instruction operates in Indexed Literal Offset Addressing mode whenever $f \le 95$ (5Fh). See **Section 28.2.3 "Byte-Oriented and Bit-Oriented Instructions in Indexed Literal Offset Mode"** for details.

Words: 1

Cycles: 1

Q Cycle Activity:

Q1	Q2	Q3	Q4
Decode	Read register 'f'	Process Data	Write registers PRODH: PRODL

Example: `MULWF REG, 1`

Before Instruction
W = C4h
REG = B5h
PRODH = ?
PRODL = ?
After Instruction
W = C4h
REG = B5h
PRODH = 8Ah
PRODL = 94h

© 2011 Microchip Technology Inc.

NEGF **Negate f**

Syntax: NEGF f {,a}

Operands: $0 \le f \le 255$
$a \in [0,1]$

Operation: $(\bar{f}) + 1 \rightarrow f$

Status Affected: N, OV, C, DC, Z

Encoding:

0110	110a	ffff	ffff

Description: Location, 'f', is negated using two's complement. The result is placed in the data memory location, 'f'.

If 'a' is '0', the Access Bank is selected. If 'a' is '1', the BSR is used to select the GPR bank (default).

If 'a' is '0' and the extended instruction set is enabled, this instruction operates in Indexed Literal Offset Addressing mode whenever $f \le 95$ (5Fh). See **Section 28.2.3 "Byte-Oriented and Bit-Oriented Instructions in Indexed Literal Offset Mode"** for details.

Words: 1

Cycles: 1

Q Cycle Activity:

Q1	Q2	Q3	Q4
Decode	Read register 'f'	Process Data	Write register 'f'

Example:
```
NEGF    REG, 1
```
Before Instruction
REG = 0011 1010 [3Ah]
After Instruction
REG = 1100 0110 [C6h]

NOP **No Operation**

Syntax: NOP

Operands: None

Operation: No operation

Status Affected: None

Encoding:

0000 1111	0000 xxxx	0000 xxxx	0000 xxxx

Description: No operation.

Words: 1

Cycles: 1

Q Cycle Activity:

Q1	Q2	Q3	Q4
Decode	No operation	No operation	No operation

Example:

None.

POP **Pop Top of Return Stack**

Syntax: POP

Operands: None

Operation: (TOS) → bit bucket

Status Affected: None

Encoding:

0000	0000	0000	0110

Description: The TOS value is pulled off the return stack and is discarded. The TOS value then becomes the previous value that was pushed onto the return stack. This instruction is provided to enable the user to properly manage the return stack to incorporate a software stack.

Words: 1

Cycles: 1

Q Cycle Activity:

Q1	Q2	Q3	Q4
Decode	No operation	POP TOS value	No operation

Example:
```
POP
GOTO    NEW
```
Before Instruction
TOS = 0031A2h
Stack (1 level down) = 014332h

After Instruction
TOS = 014332h
PC = NEW

PUSH **Push Top of Return Stack**

Syntax: PUSH

Operands: None

Operation: (PC + 2) → TOS

Status Affected: None

Encoding:

0000	0000	0000	0101

Description: The PC + 2 is pushed onto the top of the return stack. The previous TOS value is pushed down on the stack. This instruction allows implementing a software stack by modifying TOS and then pushing it onto the return stack.

Words: 1

Cycles: 1

Q Cycle Activity:

Q1	Q2	Q3	Q4
Decode	PUSH PC + 2 onto return stack	No operation	No operation

Example:
```
PUSH
```
Before Instruction
TOS = 345Ah
PC = 0124h

After Instruction
PC = 0126h
TOS = 0126h
Stack (1 level down) = 345Ah

© 2011 Microchip Technology Inc.

RCALL **Relative Call**

Syntax: RCALL n

Operands: -1024 ≤ n ≤ 1023

Operation: (PC) + 2 → TOS,
(PC) + 2 + 2n → PC

Status Affected: None

Encoding:

1101	1nnn	nnnn	nnnn

Description: Subroutine call with a jump up to 1K from the current location. First, return address (PC + 2) is pushed onto the stack. Then, add the 2's complement number '2n' to the PC. Since the PC will have incremented to fetch the next instruction, the new address will be PC + 2 + 2n. This instruction is a two-cycle instruction.

Words: 1

Cycles: 2

Q Cycle Activity:

Q1	Q2	Q3	Q4
Decode	Read literal 'n' PUSH PC to stack	Process Data	Write to PC
No operation	No operation	No operation	No operation

Example: HERE RCALL Jump

Before Instruction
PC = Address (HERE)
After Instruction
PC = Address (Jump)
TOS = Address (HERE + 2)

RESET **Reset**

Syntax: RESET

Operands: None

Operation: Reset all registers and flags that are affected by a $\overline{\text{MCLR}}$ Reset.

Status Affected: All

Encoding:

0000	0000	1111	1111

Description: This instruction provides a way to execute a $\overline{\text{MCLR}}$ Reset in software.

Words: 1

Cycles: 1

Q Cycle Activity:

Q1	Q2	Q3	Q4
Decode	Start reset	No operation	No operation

Example: RESET

After Instruction
Registers = Reset Value
Flags* = Reset Value

RETFIE **Return from Interrupt**

Syntax: RETFIE {s}

Operands: s ∈ [0,1]

Operation: (TOS) → PC,
1 → GIE/GIEH or PEIE/GIEL;
if s = 1,
(WS) → W,
(STATUSS) → STATUS,
(BSRS) → BSR,
PCLATU, PCLATH are unchanged

Status Affected: GIE/GIEH, PEIE/GIEL.

Encoding:

0000	0000	0001	000s

Description: Return from interrupt. Stack is popped and Top-of-Stack (TOS) is loaded into the PC. Interrupts are enabled by setting either the high or low-priority Global Interrupt Enable bit. If 's' = 1, the contents of the shadow registers WS, STATUSS and BSRS are loaded into their corresponding registers W, STATUS and BSR. If 's' = 0, no update of these registers occurs (default).

Words: 1

Cycles: 2

Q Cycle Activity:

Q1	Q2	Q3	Q4
Decode	No operation	No operation	POP PC from stack Set GIEH or GIEL
No operation	No operation	No operation	No operation

Example: RETFIE 1

After Interrupt
PC = TOS
W = WS
BSR = BSRS
STATUS = STATUSS
GIE/GIEH, PEIE/GIEL = 1

RETLW **Return Literal to W**

Syntax: RETLW k

Operands: 0 ≤ k ≤ 255

Operation: k → W,
(TOS) → PC,
PCLATU, PCLATH are unchanged

Status Affected: None

Encoding:

0000	1100	kkkk	kkkk

Description: W is loaded with the eight-bit literal, 'k'. The Program Counter is loaded from the top of the stack (the return address). The high address latch (PCLATH) remains unchanged.

Words: 1

Cycles: 2

Q Cycle Activity:

Q1	Q2	Q3	Q4
Decode	Read literal 'k'	Process Data	POP PC from stack, write to W
No operation	No operation	No operation	No operation

Example:

```
    CALL TABLE ; W contains table
               ; offset value
               ; W now has
               ; table value
    :
TABLE
    ADDWF PCL  ; W = offset
    RETLW k0   ; Begin table
    RETLW k1   ;
    :
    :
    RETLW kn   ; End of table
```

Before Instruction
W = 07h
After Instruction
W = value of kn

© 2011 Microchip Technology Inc.

RETURN **Return from Subroutine**

Syntax: RETURN {s}

Operands: s ∈ [0,1]

Operation: (TOS) → PC;
if s = 1,
(WS) → W,
(STATUSS) → STATUS,
(BSRS) → BSR,
PCLATU, PCLATH are unchanged

Status Affected: None

Encoding:

0000	0000	0001	001s

Description: Return from subroutine. The stack is popped and the top of the stack (TOS) is loaded into the Program Counter. If 's'= 1, the contents of the shadow registers WS, STATUSS and BSRS are loaded into their corresponding registers W, STATUS and BSR. If 's' = 0, no update of these registers occurs (default).

Words: 1

Cycles: 2

Q Cycle Activity:

Q1	Q2	Q3	Q4
Decode	No operation	Process Data	POP PC from stack
No operation	No operation	No operation	No operation

Example: RETURN

After Instruction:
PC = TOS

RLCF **Rotate Left f through Carry**

Syntax: RLCF f {,d {,a}}

Operands: 0 ≤ f ≤ 255
d ∈ [0,1]
a ∈ [0,1]

Operation: (f<n>) → dest<n + 1>,
(f<7>) → C,
(C) → dest<0>

Status Affected: C, N, Z

Encoding:

0011	01da	ffff	ffff

Description: The contents of register, 'f', are rotated one bit to the left through the Carry flag. If 'd' is '0', the result is placed in W. If 'd' is '1', the result is stored back in register, 'f' (default).

If 'a' is '0', the Access Bank is selected. If 'a' is '1', the BSR is used to select the GPR bank (default).

If 'a' is '0' and the extended instruction set is enabled, this instruction operates in Indexed Literal Offset Addressing mode whenever f ≤ 95 (5Fh). See **Section 28.2.3 "Byte-Oriented and Bit-Oriented Instructions in Indexed Literal Offset Mode"** for details.

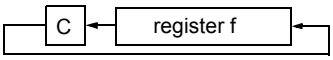

Words: 1

Cycles: 1

Q Cycle Activity:

Q1	Q2	Q3	Q4
Decode	Read register 'f'	Process Data	Write to destination

Example: RLCF REG, 0, 0

Before Instruction
REG = 1110 0110
C = 0
After Instruction
REG = 1110 0110
W = 1100 1100
C = 1

RLNCF **Rotate Left f (No Carry)**

Syntax: RLNCF f {,d {,a}}

Operands: $0 \le f \le 255$
$d \in [0,1]$
$a \in [0,1]$

Operation: (f<n>) → dest<n + 1>,
(f<7>) → dest<0>

Status Affected: N, Z

Encoding:

0100	01da	ffff	ffff

Description: The contents of register, 'f', are rotated one bit to the left. If 'd' is '0', the result is placed in W. If 'd' is '1', the result is stored back in register, 'f' (default).

If 'a' is '0', the Access Bank is selected. If 'a' is '1', the BSR is used to select the GPR bank (default).

If 'a' is '0' and the extended instruction set is enabled, this instruction operates in Indexed Literal Offset Addressing mode whenever f ≤ 95 (5Fh). See **Section 28.2.3 "Byte-Oriented and Bit-Oriented Instructions in Indexed Literal Offset Mode"** for details.

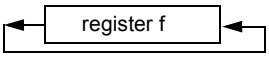

Words: 1

Cycles: 1

Q Cycle Activity:

Q1	Q2	Q3	Q4
Decode	Read register 'f'	Process Data	Write to destination

Example: RLNCF REG, 1, 0

Before Instruction
REG = 1010 1011
After Instruction
REG = 0101 0111

RRCF **Rotate Right f through Carry**

Syntax: RRCF f {,d {,a}}

Operands: $0 \le f \le 255$
$d \in [0,1]$
$a \in [0,1]$

Operation: (f<n>) → dest<n – 1>,
(f<0>) → C,
(C) → dest<7>

Status Affected: C, N, Z

Encoding:

0011	00da	ffff	ffff

Description: The contents of register, 'f', are rotated one bit to the right through the Carry flag. If 'd' is '0', the result is placed in W. If 'd' is '1', the result is placed back in register, 'f' (default).

If 'a' is '0', the Access Bank is selected. If 'a' is '1', the BSR is used to select the GPR bank (default).

If 'a' is '0' and the extended instruction set is enabled, this instruction operates in Indexed Literal Offset Addressing mode whenever f ≤ 95 (5Fh). See **Section 28.2.3 "Byte-Oriented and Bit-Oriented Instructions in Indexed Literal Offset Mode"** for details.

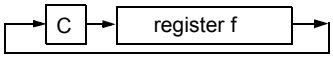

Words: 1

Cycles: 1

Q Cycle Activity:

Q1	Q2	Q3	Q4
Decode	Read register 'f'	Process Data	Write to destination

Example: RRCF REG, 0, 0

Before Instruction
REG = 1110 0110
C = 0
After Instruction
REG = 1110 0110
W = 0111 0011
C = 0

© 2011 Microchip Technology Inc.

RRNCF **Rotate Right f (No Carry)**

Syntax: RRNCF f {,d {,a}}

Operands: $0 \le f \le 255$
$d \in [0,1]$
$a \in [0,1]$

Operation: (f<n>) → dest<n – 1>,
(f<0>) → dest<7>

Status Affected: N, Z

Encoding:

0100	00da	ffff	ffff

Description: The contents of register, 'f', are rotated one bit to the right. If 'd' is '0', the result is placed in W. If 'd' is '1', the result is placed back in register, 'f' (default).

If 'a' is '0', the Access Bank will be selected, overriding the BSR value. If 'a' is '1', then the bank will be selected as per the BSR value (default).

If 'a' is '0' and the extended instruction set is enabled, this instruction operates in Indexed Literal Offset Addressing mode whenever f ≤ 95 (5Fh). See **Section 28.2.3 "Byte-Oriented and Bit-Oriented Instructions in Indexed Literal Offset Mode"** for details.

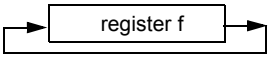

Words: 1

Cycles: 1

Q Cycle Activity:

Q1	Q2	Q3	Q4
Decode	Read register 'f'	Process Data	Write to destination

Example 1:
```
RRNCF   REG, 1, 0
Before Instruction
    REG     =   1101 0111
After Instruction
    REG     =   1110 1011
```

Example 2:
```
RRNCF   REG, 0, 0
Before Instruction
    W       =   ?
    REG     =   1101 0111
After Instruction
    W       =   1110 1011
    REG     =   1101 0111
```

SETF **Set f**

Syntax: SETF f {,a}

Operands: $0 \le f \le 255$
$a \in [0,1]$

Operation: FFh → f

Status Affected: None

Encoding:

0110	100a	ffff	ffff

Description: The contents of the specified register are set to FFh.

If 'a' is '0', the Access Bank is selected. If 'a' is '1', the BSR is used to select the GPR bank (default).

If 'a' is '0' and the extended instruction set is enabled, this instruction operates in Indexed Literal Offset Addressing mode whenever f ≤ 95 (5Fh). See **Section 28.2.3 "Byte-Oriented and Bit-Oriented Instructions in Indexed Literal Offset Mode"** for details.

Words: 1

Cycles: 1

Q Cycle Activity:

Q1	Q2	Q3	Q4
Decode	Read register 'f'	Process Data	Write register 'f'

Example:
```
SETF    REG,1
Before Instruction
    REG     =   5Ah
After Instruction
    REG     =   FFh
```

SLEEP **Enter Sleep Mode**

Syntax: SLEEP

Operands: None

Operation: 00h → WDT,
0 → WDT postscaler,
1 → $\overline{TO}$,
0 → $\overline{PD}$

Status Affected: $\overline{TO}$, $\overline{PD}$

Encoding:

0000	0000	0000	0011

Description: The Power-Down status bit ($\overline{PD}$) is cleared. The Time-out status bit ($\overline{TO}$) is set. The Watchdog Timer and its postscaler are cleared.

The processor is put into Sleep mode with the oscillator stopped.

Words: 1

Cycles: 1

Q Cycle Activity:

Q1	Q2	Q3	Q4
Decode	No operation	Process Data	Go to Sleep

Example: SLEEP

Before Instruction
$\overline{TO}$ = ?
$\overline{PD}$ = ?
After Instruction
$\overline{TO}$ = 1 †
$\overline{PD}$ = 0

† If WDT causes wake-up, this bit is cleared.

SUBFWB **Subtract f from W with Borrow**

Syntax: SUBFWB f {,d {,a}}

Operands: 0 ≤ f ≤ 255
d ∈ [0,1]
a ∈ [0,1]

Operation: (W) – (f) – ($\overline{C}$) → dest

Status Affected: N, OV, C, DC, Z

Encoding:

0101	01da	ffff	ffff

Description: Subtract register, 'f', and Carry flag (borrow) from W (2's complement method). If 'd' is '0', the result is stored in W. If 'd' is '1', the result is stored in register, 'f' (default).

If 'a' is '0', the Access Bank is selected. If 'a' is '1', the BSR is used to select the GPR bank (default).

If 'a' is '0' and the extended instruction set is enabled, this instruction operates in Indexed Literal Offset Addressing mode whenever f ≤ 95 (5Fh). See **Section 28.2.3 "Byte-Oriented and Bit-Oriented Instructions in Indexed Literal Offset Mode"** for details.

Words: 1

Cycles: 1

Q Cycle Activity:

Q1	Q2	Q3	Q4
Decode	Read register 'f'	Process Data	Write to destination

Example 1: SUBFWB REG, 1, 0

Before Instruction
REG = 3
W = 2
C = 1
After Instruction
REG = FF
W = 2
C = 0
Z = 0
N = 1 ; result is negative

Example 2: SUBFWB REG, 0, 0

Before Instruction
REG = 2
W = 5
C = 1
After Instruction
REG = 2
W = 3
C = 1
Z = 0
N = 0 ; result is positive

Example 3: SUBFWB REG, 1, 0

Before Instruction
REG = 1
W = 2
C = 0
After Instruction
REG = 0
W = 2
C = 1
Z = 1 ; result is zero
N = 0

© 2011 Microchip Technology Inc.

SUBLW **Subtract W from Literal**

Syntax: SUBLW k

Operands: $0 \le k \le 255$

Operation: $k - (W) \rightarrow W$

Status Affected: N, OV, C, DC, Z

Encoding:

0000	1000	kkkk	kkkk

Description: W is subtracted from the eight-bit literal 'k'. The result is placed in W.

Words: 1

Cycles: 1

Q Cycle Activity:

Q1	Q2	Q3	Q4
Decode	Read literal 'k'	Process Data	Write to W

Example 1:
```
SUBLW   0x02
```
Before Instruction
W = 01h
C = ?
After Instruction
W = 01h
C = 1 ; result is positive
Z = 0
N = 0

Example 2:
```
SUBLW   0x02
```
Before Instruction
W = 02h
C = ?
After Instruction
W = 00h
C = 1 ; result is zero
Z = 1
N = 0

Example 3:
```
SUBLW   0x02
```
Before Instruction
W = 03h
C = ?
After Instruction
W = FFh ; (2's complement)
C = 0 ; result is negative
Z = 0
N = 1

SUBWF **Subtract W from f**

Syntax: SUBWF f {,d {,a}}

Operands: $0 \le f \le 255$
$d \in [0,1]$
$a \in [0,1]$

Operation: $(f) - (W) \rightarrow dest$

Status Affected: N, OV, C, DC, Z

Encoding:

0101	11da	ffff	ffff

Description: Subtract W from register, 'f' (2's complement method). If 'd' is '0', the result is stored in W. If 'd' is '1', the result is stored back in register, 'f' (default).

If 'a' is '0', the Access Bank is selected. If 'a' is '1', the BSR is used to select the GPR bank (default).

If 'a' is '0' and the extended instruction set is enabled, this instruction operates in Indexed Literal Offset Addressing mode whenever $f \le 95$ (5Fh). See **Section 28.2.3 "Byte-Oriented and Bit-Oriented Instructions in Indexed Literal Offset Mode"** for details.

Words: 1

Cycles: 1

Q Cycle Activity:

Q1	Q2	Q3	Q4
Decode	Read register 'f'	Process Data	Write to destination

Example 1:
```
SUBWF   REG, 1, 0
```
Before Instruction
REG = 3
W = 2
C = ?
After Instruction
REG = 1
W = 2
C = 1 ; result is positive
Z = 0
N = 0

Example 2:
```
SUBWF   REG, 0, 0
```
Before Instruction
REG = 2
W = 2
C = ?
After Instruction
REG = 2
W = 0
C = 1 ; result is zero
Z = 1
N = 0

Example 3:
```
SUBWF   REG, 1, 0
```
Before Instruction
REG = 1
W = 2
C = ?
After Instruction
REG = FFh ;(2's complement)
W = 2
C = 0 ; result is negative
Z = 0
N = 1

© 2011 Microchip Technology Inc.

SUBWFB **Subtract W from f with Borrow**

Syntax: SUBWFB f {,d {,a}}

Operands: $0 \le f \le 255$
$d \in [0,1]$
$a \in [0,1]$

Operation: (f) – (W) – ($\overline{C}$) → dest

Status Affected: N, OV, C, DC, Z

Encoding:

0101	10da	ffff	ffff

Description: Subtract W and the Carry flag (borrow) from register, 'f' (2's complement method). If 'd' is '0', the result is stored in W. If 'd' is '1', the result is stored back in register, 'f' (default).

If 'a' is '0', the Access Bank is selected. If 'a' is '1', the BSR is used to select the GPR bank (default).

If 'a' is '0' and the extended instruction set is enabled, this instruction operates in Indexed Literal Offset Addressing mode whenever f ≤ 95 (5Fh). See **Section 28.2.3 "Byte-Oriented and Bit-Oriented Instructions in Indexed Literal Offset Mode"** for details.

Words: 1

Cycles: 1

Q Cycle Activity:

Q1	Q2	Q3	Q4
Decode	Read register 'f'	Process Data	Write to destination

Example 1:
```
SUBWFB  REG, 1, 0
Before Instruction
    REG  =  19h   (0001 1001)
    W    =  0Dh   (0000 1101)
    C    =  1
After Instruction
    REG  =  0Ch   (0000 1011)
    W    =  0Dh   (0000 1101)
    C    =  1
    Z    =  0
    N    =  0     ; result is positive
```

Example 2:
```
SUBWFB  REG, 0, 0
Before Instruction
    REG  =  1Bh   (0001 1011)
    W    =  1Ah   (0001 1010)
    C    =  0
After Instruction
    REG  =  1Bh   (0001 1011)
    W    =  00h
    C    =  1
    Z    =  1     ; result is zero
    N    =  0
```

Example 3:
```
SUBWFB  REG, 1, 0
Before Instruction
    REG  =  03h   (0000 0011)
    W    =  0Eh   (0000 1101)
    C    =  1
After Instruction
    REG  =  F5h   (1111 0100)
                  ; [2's comp]
    W    =  0Eh   (0000 1101)
    C    =  0
    Z    =  0
    N    =  1     ; result is negative
```

SWAPF **Swap f**

Syntax: SWAPF f {,d {,a}}

Operands: $0 \le f \le 255$
$d \in [0,1]$
$a \in [0,1]$

Operation: (f<3:0>) → dest<7:4>,
(f<7:4>) → dest<3:0>

Status Affected: None

Encoding:

0011	10da	ffff	ffff

Description: The upper and lower nibbles of register, 'f', are exchanged. If 'd' is '0', the result is placed in W. If 'd' is '1', the result is placed in register, 'f' (default).

If 'a' is '0', the Access Bank is selected. If 'a' is '1', the BSR is used to select the GPR bank (default).

If 'a' is '0' and the extended instruction set is enabled, this instruction operates in Indexed Literal Offset Addressing mode whenever f ≤ 95 (5Fh). See **Section 28.2.3 "Byte-Oriented and Bit-Oriented Instructions in Indexed Literal Offset Mode"** for details.

Words: 1

Cycles: 1

Q Cycle Activity:

Q1	Q2	Q3	Q4
Decode	Read register 'f'	Process Data	Write to destination

Example:
```
SWAPF   REG, 1, 0
Before Instruction
    REG  =  53h
After Instruction
    REG  =  35h
```


© 2011 Microchip Technology Inc.

TBLRD **Table Read**

Syntax: TBLRD (*; *+; *-; +*)

Operands: None

Operation: if TBLRD *,
(Prog Mem (TBLPTR)) → TABLAT,
TBLPTR – No Change;
if TBLRD *+,
(Prog Mem (TBLPTR)) → TABLAT,
(TBLPTR) + 1 → TBLPTR;
if TBLRD *-,
(Prog Mem (TBLPTR)) → TABLAT,
(TBLPTR) – 1 → TBLPTR;
if TBLRD +*,
(TBLPTR) + 1 → TBLPTR,
(Prog Mem (TBLPTR)) → TABLAT

Status Affected: None

Encoding:

0000	0000	0000	10nn nn=0 * =1 *+ =2 *- =3 +*

Description: This instruction is used to read the contents of Program Memory (P.M.). To address the program memory, a pointer called Table Pointer (TBLPTR) is used.

The TBLPTR (a 21-bit pointer) points to each byte in the program memory. TBLPTR has a 2-Mbyte address range.

TBLPTR<0> = 0: Least Significant Byte of Program Memory Word

TBLPTR<0> = 1: Most Significant Byte of Program Memory Word

The TBLRD instruction can modify the value of TBLPTR as follows:

- no change
- post-increment
- post-decrement
- pre-increment

Words: 1

Cycles: 2

Q Cycle Activity:

Q1	Q2	Q3	Q4
Decode	No operation	No operation	No operation
No operation	No operation (Read Program Memory)	No operation	No operation (Write TABLAT)

TBLRD **Table Read (Continued)**

Example 1: TBLRD *+

Before Instruction
TABLAT = 55h
TBLPTR = 00A356h
MEMORY(00A356h) = 34h
After Instruction
TABLAT = 34h
TBLPTR = 00A357h

Example 2: TBLRD +*

Before Instruction
TABLAT = AAh
TBLPTR = 01A357h
MEMORY(01A357h) = 12h
MEMORY(01A358h) = 34h
After Instruction
TABLAT = 34h
TBLPTR = 01A358h

TBLWT **Table Write**

Syntax: TBLWT (*; *+; *-; +*)

Operands: None

Operation: if TBLWT*,
(TABLAT) → Holding Register,
TBLPTR – No Change;
if TBLWT*+,
(TABLAT) → Holding Register,
(TBLPTR) + 1 → TBLPTR;
if TBLWT*-,
(TABLAT) → Holding Register,
(TBLPTR) – 1 → TBLPTR;
if TBLWT+*,
(TBLPTR) + 1 → TBLPTR,
(TABLAT) → Holding Register

Status Affected: None

Encoding:

0000	0000	0000	11nn nn=0 * =1 *+ =2 *- =3 +*

Description: This instruction uses the 3 LSBs of TBLPTR to determine which of the 8 holding registers the TABLAT is written to. The holding registers are used to program the contents of Program Memory (P.M.). (Refer to **Section 6.0 "Memory Organization"** for additional details on programming Flash memory.)

The TBLPTR (a 21-bit pointer) points to each byte in the program memory. TBLPTR has a 2-Mbyte address range. The LSb of the TBLPTR selects which byte of the program memory location to access.

TBLPTR<0> = 0: Least Significant Byte of Program Memory Word

TBLPTR<0> = 1: Most Significant Byte of Program Memory Word

The TBLWT instruction can modify the value of TBLPTR as follows:

- no change
- post-increment
- post-decrement
- pre-increment

Words: 1

Cycles: 2

Q Cycle Activity:

Q1	Q2	Q3	Q4
Decode	No operation	No operation	No operation
No operation	No operation (Read TABLAT)	No operation	No operation (Write to Holding Register)

TBLWT **Table Write (Continued)**

Example 1: TBLWT *+

Before Instruction
TABLAT = 55h
TBLPTR = 00A356h
HOLDING REGISTER (00A356h) = FFh
After Instructions (table write completion)
TABLAT = 55h
TBLPTR = 00A357h
HOLDING REGISTER (00A356h) = 55h

Example 2: TBLWT +*

Before Instruction
TABLAT = 34h
TBLPTR = 01389Ah
HOLDING REGISTER (01389Ah) = FFh
HOLDING REGISTER (01389Bh) = FFh
After Instruction (table write completion)
TABLAT = 34h
TBLPTR = 01389Bh
HOLDING REGISTER (01389Ah) = FFh
HOLDING REGISTER (01389Bh) = 34h

© 2011 Microchip Technology Inc.

TSTFSZ **Test f, Skip if 0**

Syntax: TSTFSZ f {,a}

Operands: $0 \le f \le 255$
$a \in [0,1]$

Operation: skip if f = 0

Status Affected: None

Encoding:

0110	011a	ffff	ffff

Description: If 'f' = 0, the next instruction fetched during the current instruction execution is discarded and a NOP is executed, making this a two-cycle instruction.

If 'a' is '0', the Access Bank is selected. If 'a' is '1', the BSR is used to select the GPR bank (default).

If 'a' is '0' and the extended instruction set is enabled, this instruction operates in Indexed Literal Offset Addressing mode whenever $f \le 95$ (5Fh). See **Section 28.2.3 "Byte-Oriented and Bit-Oriented Instructions in Indexed Literal Offset Mode"** for details.

Words: 1

Cycles: 1(2)
Note: 3 cycles if skip and followed by a 2-word instruction.

Q Cycle Activity:

Q1	Q2	Q3	Q4
Decode	Read register 'f'	Process Data	No operation

If skip:

Q1	Q2	Q3	Q4
No operation	No operation	No operation	No operation

If skip and followed by 2-word instruction:

Q1	Q2	Q3	Q4
No operation	No operation	No operation	No operation
No operation	No operation	No operation	No operation

Example:
```
HERE    TSTFSZ  CNT, 1
NZERO   :
ZERO    :
```
Before Instruction
PC = Address (HERE)
After Instruction
If CNT = 00h,
PC = Address (ZERO)
If CNT ≠ 00h,
PC = Address (NZERO)

XORLW **Exclusive OR Literal with W**

Syntax: XORLW k

Operands: $0 \le k \le 255$

Operation: (W) .XOR. k → W

Status Affected: N, Z

Encoding:

0000	1010	kkkk	kkkk

Description: The contents of W are XORed with the 8-bit literal, 'k'. The result is placed in W.

Words: 1

Cycles: 1

Q Cycle Activity:

Q1	Q2	Q3	Q4
Decode	Read literal 'k'	Process Data	Write to W

Example:
```
XORLW   0xAF
```
Before Instruction
W = B5h
After Instruction
W = 1Ah

XORWF	Exclusive OR W with f
Syntax:	XORWF f {,d {,a}}
Operands:	$0 \le f \le 255$ $d \in [0,1]$ $a \in [0,1]$
Operation:	(W) .XOR. (f) → dest
Status Affected:	N, Z

Encoding:

0001	10da	ffff	ffff

Description: Exclusive OR the contents of W with register, 'f'. If 'd' is '0', the result is stored in W. If 'd' is '1', the result is stored back in the register 'f' (default).

If 'a' is '0', the Access Bank is selected. If 'a' is '1', the BSR is used to select the GPR bank (default).

If 'a' is '0' and the extended instruction set is enabled, this instruction operates in Indexed Literal Offset Addressing mode whenever f ≤ 95 (5Fh). See **Section 28.2.3 "Byte-Oriented and Bit-Oriented Instructions in Indexed Literal Offset Mode"** for details.

Words: 1

Cycles: 1

Q Cycle Activity:

Q1	Q2	Q3	Q4
Decode	Read register 'f'	Process Data	Write to destination

Example: `XORWF REG, 1, 0`

Before Instruction
REG = AFh
W = B5h
After Instruction
REG = 1Ah
W = B5h

© 2011 Microchip Technology Inc.

28.2 Extended Instruction Set

In addition to the standard 75 instructions of the PIC18 instruction set, the PIC18F46J50 family of devices also provide an optional extension to the core CPU functionality. The added features include eight additional instructions that augment Indirect and Indexed Addressing operations and the implementation of Indexed Literal Offset Addressing for many of the standard PIC18 instructions.

The additional features of the extended instruction set are enabled by default on unprogrammed devices. Users must properly set or clear the XINST Configuration bit during programming to enable or disable these features.

The instructions in the extended set can all be classified as literal operations, which either manipulate the File Select Registers (FSR), or use them for Indexed Addressing. Two of the instructions, ADDFSR and SUBFSR, each have an additional special instantiation for using FSR2. These versions (ADDULNK and SUBULNK) allow for automatic return after execution.

The extended instructions are specifically implemented to optimize re-entrant program code (that is, code that is recursive or that uses a software stack) written in high-level languages, particularly C. Among other things, they allow users working in high-level languages to perform certain operations on data structures more efficiently. These include:

- Dynamic allocation and deallocation of software stack space when entering and leaving subroutines
- Function Pointer invocation
- Software Stack Pointer manipulation
- Manipulation of variables located in a software stack

A summary of the instructions in the extended instruction set is provided in Table 28-3. Detailed descriptions are provided in **Section 28.2.2 "Extended Instruction Set"**. The opcode field descriptions in Table 28-1 (page 436) apply to both the standard and extended PIC18 instruction sets.

Note: The instruction set extension and the Indexed Literal Offset Addressing mode were designed for optimizing applications written in C; the user may likely never use these instructions directly in assembler. The syntax for these commands is provided as a reference for users who may be reviewing code that has been generated by a compiler.

28.2.1 EXTENDED INSTRUCTION SYNTAX

Most of the extended instructions use indexed arguments, using one of the FSRs and some offset to specify a source or destination register. When an argument for an instruction serves as part of Indexed Addressing, it is enclosed in square brackets ("[ ]"). This is done to indicate that the argument is used as an index or offset. The MPASM™ Assembler will flag an error if it determines that an index or offset value is not bracketed.

When the extended instruction set is enabled, brackets are also used to indicate index arguments in byte-oriented and bit-oriented instructions. This is in addition to other changes in their syntax. For more details, see **Section 28.2.3.1 "Extended Instruction Syntax with Standard PIC18 Commands"**.

Note: In the past, square brackets have been used to denote optional arguments in the PIC18 and earlier instruction sets. In this text and going forward, optional arguments are denoted by braces ("{ }").

TABLE 28-3: EXTENSIONS TO THE PIC18 INSTRUCTION SET

Mnemonic, Operands		Description	Cycles	16-Bit Instruction Word				Status Affected
				MSb			LSb	
ADDFSR	f, k	Add Literal to FSR	1	1110	1000	ffkk	kkkk	None
ADDULNK	k	Add Literal to FSR2 and Return	2	1110	1000	11kk	kkkk	None
CALLW		Call Subroutine using WREG	2	0000	0000	0001	0100	None
MOVSF	z_s, f_d	Move z_s (source) to 1st word	2	1110	1011	0zzz	zzzz	None
		f_d (destination) 2nd word		1111	ffff	ffff	ffff	—
MOVSS	z_s, z_d	Move z_s (source) to 1st word	2	1110	1011	1zzz	zzzz	None
		z_d (destination) 2nd word		1111	xxxx	xzzz	zzzz	—
PUSHL	k	Store Literal at FSR2, Decrement FSR2	1	1110	1010	kkkk	kkkk	None —
SUBFSR	f, k	Subtract Literal from FSR	1	1110	1001	ffkk	kkkk	None
SUBULNK	k	Subtract Literal from FSR2 and Return	2	1110	1001	11kk	kkkk	None

28.2.2 EXTENDED INSTRUCTION SET

ADDFSR **Add Literal to FSR**

Syntax: ADDFSR f, k

Operands: $0 \le k \le 63$
$f \in [0, 1, 2]$

Operation: FSR(f) + k → FSR(f)

Status Affected: None

Encoding:

1110	1000	ffkk	kkkk

Description: The 6-bit literal, ‘k’, is added to the contents of the FSR specified by ‘f’.

Words: 1

Cycles: 1

Q Cycle Activity:

Q1	Q2	Q3	Q4
Decode	Read literal ‘k’	Process Data	Write to FSR

Example: `ADDFSR 2, 0x23`

Before Instruction
FSR2 = 03FFh
After Instruction
FSR2 = 0422h

ADDULNK **Add Literal to FSR2 and Return**

Syntax: ADDULNK k

Operands: $0 \le k \le 63$

Operation: FSR2 + k → FSR2,
(TOS) → PC

Status Affected: None

Encoding:

1110	1000	11kk	kkkk

Description: The 6-bit literal, ‘k’, is added to the contents of FSR2. A RETURN is then executed by loading the PC with the TOS.

The instruction takes two cycles to execute; a NOP is performed during the second cycle.

This may be thought of as a special case of the ADDFSR instruction, where f = 3 (binary ‘11’); it operates only on FSR2.

Words: 1

Cycles: 2

Q Cycle Activity:

Q1	Q2	Q3	Q4
Decode	Read literal ‘k’	Process Data	Write to FSR
No Operation	No Operation	No Operation	No Operation

Example: `ADDULNK 0x23`

Before Instruction
FSR2 = 03FFh
PC = 0100h
After Instruction
FSR2 = 0422h
PC = (TOS)

Note: All PIC18 instructions may take an optional label argument preceding the instruction mnemonic for use in symbolic addressing. If a label is used, the instruction format then becomes: {label} instruction argument(s).

© 2011 Microchip Technology Inc.

CALLW **Subroutine Call using WREG**

Syntax: CALLW

Operands: None

Operation: (PC + 2) → TOS,
(W) → PCL,
(PCLATH) → PCH,
(PCLATU) → PCU

Status Affected: None

Encoding:

0000	0000	0001	0100

Description: First, the return address (PC + 2) is pushed onto the return stack. Next, the contents of W are written to PCL; the existing value is discarded. Then, the contents of PCLATH and PCLATU are latched into PCH and PCU, respectively. The second cycle is executed as a NOP instruction while the new next instruction is fetched.

Unlike CALL, there is no option to update W, STATUS or BSR.

Words: 1

Cycles: 2

Q Cycle Activity:

Q1	Q2	Q3	Q4
Decode	Read WREG	Push PC to stack	No operation
No operation	No operation	No operation	No operation

Example:
```
HERE    CALLW
```
Before Instruction
```
PC      =   address (HERE)
PCLATH  =   10h
PCLATU  =   00h
W       =   06h
```
After Instruction
```
PC      =   001006h
TOS     =   address (HERE + 2)
PCLATH  =   10h
PCLATU  =   00h
W       =   06h
```

MOVSF **Move Indexed to f**

Syntax: MOVSF [z_s], f_d

Operands: $0 \le z_s \le 127$
$0 \le f_d \le 4095$

Operation: ((FSR2) + z_s) → f_d

Status Affected: None

Encoding:

1st word (source)	1110	1011	0zzz	$zzzz_s$
2nd word (destin.)	1111	ffff	ffff	$ffff_d$

Description: The contents of the source register are moved to destination register, 'f_d'. The actual address of the source register is determined by adding the 7-bit literal offset 'z_s', in the first word, to the value of FSR2. The address of the destination register is specified by the 12-bit literal 'f_d' in the second word. Both addresses can be anywhere in the 4096-byte data space (000h to FFFh).

The MOVSF instruction cannot use the PCL, TOSU, TOSH or TOSL as the destination register.

If the resultant source address points to an Indirect Addressing register, the value returned will be 00h.

Words: 2

Cycles: 2

Q Cycle Activity:

Q1	Q2	Q3	Q4
Decode	Determine source addr	Determine source addr	Read source reg
Decode	No operation No dummy read	No operation	Write register 'f' (dest)

Example:
```
MOVSF   [0x05], REG2
```
Before Instruction
```
FSR2            =   80h
Contents
of 85h          =   33h
REG2            =   11h
```
After Instruction
```
FSR2            =   80h
Contents
of 85h          =   33h
REG2            =   33h
```

MOVSS **Move Indexed to Indexed**

Syntax: MOVSS [z_s], [z_d]

Operands: $0 \le z_s \le 127$
$0 \le z_d \le 127$

Operation: ((FSR2) + z_s) → ((FSR2) + z_d)

Status Affected: None

Encoding:

1st word (source)	1110	1011	1zzz	$zzzz_s$
2nd word (dest.)	1111	xxxx	xzzz	$zzzz_d$

Description: The contents of the source register are moved to the destination register. The addresses of the source and destination registers are determined by adding the 7-bit literal offsets, 'z_s' or 'z_d', respectively, to the value of FSR2. Both registers can be located anywhere in the 4096-byte data memory space (000h to FFFh).

The MOVSS instruction cannot use the PCL, TOSU, TOSH or TOSL as the destination register.

If the resultant source address points to an Indirect Addressing register, the value returned will be 00h. If the resultant destination address points to an Indirect Addressing register, the instruction will execute as a NOP.

Words: 2

Cycles: 2

Q Cycle Activity:

Q1	Q2	Q3	Q4
Decode	Determine source addr	Determine source addr	Read source reg
Decode	Determine dest addr	Determine dest addr	Write to dest reg

Example:
```
MOVSS [0x05], [0x06]
```
Before Instruction
FSR2 = 80h
Contents of 85h = 33h
Contents of 86h = 11h
After Instruction
FSR2 = 80h
Contents of 85h = 33h
Contents of 86h = 33h

PUSHL **Store Literal at FSR2, Decrement FSR2**

Syntax: PUSHL k

Operands: $0 \le k \le 255$

Operation: k → (FSR2),
FSR2 – 1 → FSR2

Status Affected: None

Encoding:

1110	1010	kkkk	kkkk

Description: The 8-bit literal, 'k', is written to the data memory address specified by FSR2. FSR2 is decremented by 1 after the operation.

This instruction allows users to push values onto a software stack.

Words: 1

Cycles: 1

Q Cycle Activity:

Q1	Q2	Q3	Q4
Decode	Read 'k'	Process data	Write to destination

Example:
```
PUSHL 0x08
```
Before Instruction
FSR2H:FSR2L = 01ECh
Memory (01ECh) = 00h

After Instruction
FSR2H:FSR2L = 01EBh
Memory (01ECh) = 08h

© 2011 Microchip Technology Inc.

SUBFSR **Subtract Literal from FSR**

Syntax: SUBFSR f, k

Operands: $0 \le k \le 63$

$f \in [0, 1, 2]$

Operation: FSRf – k → FSRf

Status Affected: None

Encoding:

1110	1001	ffkk	kkkk

Description: The 6-bit literal, 'k', is subtracted from the contents of the FSR specified by 'f'.

Words: 1

Cycles: 1

Q Cycle Activity:

Q1	Q2	Q3	Q4
Decode	Read register 'f'	Process Data	Write to destination

Example: SUBFSR 2, 0x23

Before Instruction
FSR2 = 03FFh

After Instruction
FSR2 = 03DCh

SUBULNK **Subtract Literal from FSR2 and Return**

Syntax: SUBULNK k

Operands: $0 \le k \le 63$

Operation: FSR2 – k → FSR2,
(TOS) → PC

Status Affected: None

Encoding:

1110	1001	11kk	kkkk

Description: The 6-bit literal, 'k', is subtracted from the contents of the FSR2. A RETURN is then executed by loading the PC with the TOS.

The instruction takes two cycles to execute; a NOP is performed during the second cycle.

This may be thought of as a special case of the SUBFSR instruction, where f = 3 (binary '11'); it operates only on FSR2.

Words: 1

Cycles: 2

Q Cycle Activity:

Q1	Q2	Q3	Q4
Decode	Read register 'f'	Process Data	Write to destination
No Operation	No Operation	No Operation	No Operation

Example: SUBULNK 0x23

Before Instruction
FSR2 = 03FFh
PC = 0100h

After Instruction
FSR2 = 03DCh
PC = (TOS)

28.2.3 BYTE-ORIENTED AND BIT-ORIENTED INSTRUCTIONS IN INDEXED LITERAL OFFSET MODE

Note:	Enabling the PIC18 instruction set extension may cause legacy applications to behave erratically or fail entirely

In addition to eight new commands in the extended set, enabling the extended instruction set also enables Indexed Literal Offset Addressing (**Section 6.6.1 "Indexed Addressing with Literal Offset"**). This has a significant impact on the way that many commands of the standard PIC18 instruction set are interpreted.

When the extended set is disabled, addresses embedded in opcodes are treated as literal memory locations: either as a location in the Access Bank (a = 0) or in a GPR bank designated by the BSR (a = 1). When the extended instruction set is enabled and a = 0, however, a file register argument of 5Fh or less is interpreted as an offset from the pointer value in FSR2 and not as a literal address. For practical purposes, this means that all instructions that use the Access RAM bit as an argument – that is, all byte-oriented and bit-oriented instructions, or almost half of the core PIC18 instructions – may behave differently when the extended instruction set is enabled.

When the content of FSR2 is 00h, the boundaries of the Access RAM are essentially remapped to their original values. This may be useful in creating backward-compatible code. If this technique is used, it may be necessary to save the value of FSR2 and restore it when moving back and forth between C and assembly routines in order to preserve the Stack Pointer. Users must also keep in mind the syntax requirements of the extended instruction set (see **Section 28.2.3.1 "Extended Instruction Syntax with Standard PIC18 Commands"**).

Although the Indexed Literal Offset mode can be very useful for dynamic stack and pointer manipulation, it can also be very annoying if a simple arithmetic operation is carried out on the wrong register. Users who are accustomed to the PIC18 programming must keep in mind that, when the extended instruction set is enabled, register addresses of 5Fh or less are used for Indexed Literal Offset Addressing.

Representative examples of typical byte-oriented and bit-oriented instructions in the Indexed Literal Offset mode are provided on the following page to show how execution is affected. The operand conditions provided in the examples are applicable to all instructions of these types.

28.2.3.1 Extended Instruction Syntax with Standard PIC18 Commands

When the extended instruction set is enabled, the file register argument 'f' in the standard byte-oriented and bit-oriented commands is replaced with the literal offset value 'k'. As already noted, this occurs only when 'f' is less than or equal to 5Fh. When an offset value is used, it must be indicated by square brackets ("[ ]"). As with the extended instructions, the use of brackets indicates to the compiler that the value is to be interpreted as an index or an offset. Omitting the brackets, or using a value greater than 5Fh within the brackets, will generate an error in the MPASM Assembler.

If the index argument is properly bracketed for Indexed Literal Offset Addressing, the Access RAM argument is never specified; it will automatically be assumed to be '0'. This is in contrast to standard operation (extended instruction set disabled) when 'a' is set on the basis of the target address. Declaring the Access RAM bit in this mode will also generate an error in the MPASM Assembler.

The destination argument 'd' functions as before.

In the latest versions of the MPASM Assembler, language support for the extended instruction set must be explicitly invoked. This is done with either the command line option, /y, or the PE directive in the source listing.

28.2.4 CONSIDERATIONS WHEN ENABLING THE EXTENDED INSTRUCTION SET

It is important to note that the extensions to the instruction set may not be beneficial to all users. In particular, users who are not writing code that uses a software stack may not benefit from using the extensions to the instruction set.

Additionally, the Indexed Literal Offset Addressing mode may create issues with legacy applications written to the PIC18 assembler. This is because instructions in the legacy code may attempt to address registers in the Access Bank below 5Fh. Since these addresses are interpreted as literal offsets to FSR2 when the instruction set extension is enabled, the application may read or write to the wrong data addresses.

When porting an application to the PIC18F46J50 family, it is very important to consider the type of code. A large, re-entrant application that is written in C, and would benefit from efficient compilation, will do well when using the instruction set extensions. Legacy applications that heavily use the Access Bank will most likely not benefit from using the extended instruction set.

© 2011 Microchip Technology Inc.

ADDWF **ADD W to Indexed (Indexed Literal Offset mode)**

Syntax: ADDWF [k] {,d}

Operands: $0 \le k \le 95$
$d \in [0,1]$

Operation: (W) + ((FSR2) + k) → dest

Status Affected: N, OV, C, DC, Z

Encoding:

0010	01d0	kkkk	kkkk

Description: The contents of W are added to the contents of the register indicated by FSR2, offset by the value, 'k'.

If 'd' is '0', the result is stored in W. If 'd' is '1', the result is stored back in register 'f' (default).

Words: 1

Cycles: 1

Q Cycle Activity:

Q1	Q2	Q3	Q4
Decode	Read 'k'	Process Data	Write to destination

Example: ADDWF [OFST],0

Before Instruction
W = 17h
OFST = 2Ch
FSR2 = 0A00h
Contents of 0A2Ch = 20h
After Instruction
W = 37h
Contents of 0A2Ch = 20h

BSF **Bit Set Indexed (Indexed Literal Offset mode)**

Syntax: BSF [k], b

Operands: $0 \le f \le 95$
$0 \le b \le 7$

Operation: 1 → ((FSR2) + k)<b>

Status Affected: None

Encoding:

1000	bbb0	kkkk	kkkk

Description: Bit 'b' of the register indicated by FSR2, offset by the value, 'k', is set.

Words: 1

Cycles: 1

Q Cycle Activity:

Q1	Q2	Q3	Q4
Decode	Read register 'f'	Process Data	Write to destination

Example: BSF [FLAG_OFST], 7

Before Instruction
FLAG_OFST = 0Ah
FSR2 = 0A00h
Contents of 0A0Ah = 55h
After Instruction
Contents of 0A0Ah = D5h

SETF **Set Indexed (Indexed Literal Offset mode)**

Syntax: SETF [k]

Operands: $0 \le k \le 95$

Operation: FFh → ((FSR2) + k)

Status Affected: None

Encoding:

0110	1000	kkkk	kkkk

Description: The contents of the register indicated by FSR2, offset by, 'k', are set to FFh.

Words: 1

Cycles: 1

Q Cycle Activity:

Q1	Q2	Q3	Q4
Decode	Read 'k'	Process Data	Write register

Example: SETF [OFST]

Before Instruction
OFST = 2Ch
FSR2 = 0A00h
Contents of 0A2Ch = 00h
After Instruction
Contents of 0A2Ch = FFh

28.2.5 SPECIAL CONSIDERATIONS WITH MICROCHIP MPLAB® IDE TOOLS

The latest versions of Microchip's software tools have been designed to fully support the extended instruction set for the PIC18F46J50 family. This includes the MPLAB C18 C Compiler, MPASM assembly language and MPLAB Integrated Development Environment (IDE).

When selecting a target device for software development, MPLAB IDE will automatically set default Configuration bits for that device. The default setting for the XINST Configuration bit is '1', enabling the extended instruction set and Indexed Literal Offset Addressing. For proper execution of applications developed to take advantage of the extended instruction set, XINST must be set during programming.

To develop software for the extended instruction set, the user must enable support for the instructions and the Indexed Addressing mode in their language tool(s). Depending on the environment being used, this may be done in several ways:

- A menu option or dialog box within the environment that allows the user to configure the language tool and its settings for the project
- A command line option
- A directive in the source code

These options vary between different compilers, assemblers and development environments. Users are encouraged to review the documentation accompanying their development systems for the appropriate information.

© 2011 Microchip Technology Inc.

29.0 DEVELOPMENT SUPPORT

The PIC® microcontrollers and dsPIC® digital signal controllers are supported with a full range of software and hardware development tools:

- Integrated Development Environment
  - MPLAB® IDE Software
- Compilers/Assemblers/Linkers
  - MPLAB C Compiler for Various Device Families
  - HI-TECH C for Various Device Families
  - MPASM™ Assembler
  - MPLINK™ Object Linker/ MPLIB™ Object Librarian
  - MPLAB Assembler/Linker/Librarian for Various Device Families
- Simulators
  - MPLAB SIM Software Simulator
- Emulators
  - MPLAB REAL ICE™ In-Circuit Emulator
- In-Circuit Debuggers
  - MPLAB ICD 3
  - PICkit™ 3 Debug Express
- Device Programmers
  - PICkit™ 2 Programmer
  - MPLAB PM3 Device Programmer
- Low-Cost Demonstration/Development Boards, Evaluation Kits, and Starter Kits

29.1 MPLAB Integrated Development Environment Software

The MPLAB IDE software brings an ease of software development previously unseen in the 8/16/32-bit microcontroller market. The MPLAB IDE is a Windows® operating system-based application that contains:

- A single graphical interface to all debugging tools
  - Simulator
  - Programmer (sold separately)
  - In-Circuit Emulator (sold separately)
  - In-Circuit Debugger (sold separately)
- A full-featured editor with color-coded context
- A multiple project manager
- Customizable data windows with direct edit of contents
- High-level source code debugging
- Mouse over variable inspection
- Drag and drop variables from source to watch windows
- Extensive on-line help
- Integration of select third party tools, such as IAR C Compilers

The MPLAB IDE allows you to:

- Edit your source files (either C or assembly)
- One-touch compile or assemble, and download to emulator and simulator tools (automatically updates all project information)
- Debug using:
  - Source files (C or assembly)
  - Mixed C and assembly
  - Machine code

MPLAB IDE supports multiple debugging tools in a single development paradigm, from the cost-effective simulators, through low-cost in-circuit debuggers, to full-featured emulators. This eliminates the learning curve when upgrading to tools with increased flexibility and power.

29.2 MPLAB C Compilers for Various Device Families

The MPLAB C Compiler code development systems are complete ANSI C compilers for Microchip's PIC18, PIC24 and PIC32 families of microcontrollers and the dsPIC30 and dsPIC33 families of digital signal controllers. These compilers provide powerful integration capabilities, superior code optimization and ease of use.

For easy source level debugging, the compilers provide symbol information that is optimized to the MPLAB IDE debugger.

29.3 HI-TECH C for Various Device Families

The HI-TECH C Compiler code development systems are complete ANSI C compilers for Microchip's PIC family of microcontrollers and the dsPIC family of digital signal controllers. These compilers provide powerful integration capabilities, omniscient code generation and ease of use.

For easy source level debugging, the compilers provide symbol information that is optimized to the MPLAB IDE debugger.

The compilers include a macro assembler, linker, preprocessor, and one-step driver, and can run on multiple platforms.

29.4 MPASM Assembler

The MPASM Assembler is a full-featured, universal macro assembler for PIC10/12/16/18 MCUs.

The MPASM Assembler generates relocatable object files for the MPLINK Object Linker, Intel® standard HEX files, MAP files to detail memory usage and symbol reference, absolute LST files that contain source lines and generated machine code and COFF files for debugging.

The MPASM Assembler features include:

- Integration into MPLAB IDE projects
- User-defined macros to streamline assembly code
- Conditional assembly for multi-purpose source files
- Directives that allow complete control over the assembly process

29.5 MPLINK Object Linker/ MPLIB Object Librarian

The MPLINK Object Linker combines relocatable objects created by the MPASM Assembler and the MPLAB C18 C Compiler. It can link relocatable objects from precompiled libraries, using directives from a linker script.

The MPLIB Object Librarian manages the creation and modification of library files of precompiled code. When a routine from a library is called from a source file, only the modules that contain that routine will be linked in with the application. This allows large libraries to be used efficiently in many different applications.

The object linker/library features include:

- Efficient linking of single libraries instead of many smaller files
- Enhanced code maintainability by grouping related modules together
- Flexible creation of libraries with easy module listing, replacement, deletion and extraction

29.6 MPLAB Assembler, Linker and Librarian for Various Device Families

MPLAB Assembler produces relocatable machine code from symbolic assembly language for PIC24, PIC32 and dsPIC devices. MPLAB C Compiler uses the assembler to produce its object file. The assembler generates relocatable object files that can then be archived or linked with other relocatable object files and archives to create an executable file. Notable features of the assembler include:

- Support for the entire device instruction set
- Support for fixed-point and floating-point data
- Command line interface
- Rich directive set
- Flexible macro language
- MPLAB IDE compatibility

© 2011 Microchip Technology Inc.

29.7 MPLAB SIM Software Simulator

The MPLAB SIM Software Simulator allows code development in a PC-hosted environment by simulating the PIC MCUs and dsPIC® DSCs on an instruction level. On any given instruction, the data areas can be examined or modified and stimuli can be applied from a comprehensive stimulus controller. Registers can be logged to files for further run-time analysis. The trace buffer and logic analyzer display extend the power of the simulator to record and track program execution, actions on I/O, most peripherals and internal registers.

The MPLAB SIM Software Simulator fully supports symbolic debugging using the MPLAB C Compilers, and the MPASM and MPLAB Assemblers. The software simulator offers the flexibility to develop and debug code outside of the hardware laboratory environment, making it an excellent, economical software development tool.

29.8 MPLAB REAL ICE In-Circuit Emulator System

MPLAB REAL ICE In-Circuit Emulator System is Microchip's next generation high-speed emulator for Microchip Flash DSC and MCU devices. It debugs and programs PIC® Flash MCUs and dsPIC® Flash DSCs with the easy-to-use, powerful graphical user interface of the MPLAB Integrated Development Environment (IDE), included with each kit.

The emulator is connected to the design engineer's PC using a high-speed USB 2.0 interface and is connected to the target with either a connector compatible with in-circuit debugger systems (RJ11) or with the new high-speed, noise tolerant, Low-Voltage Differential Signal (LVDS) interconnection (CAT5).

The emulator is field upgradable through future firmware downloads in MPLAB IDE. In upcoming releases of MPLAB IDE, new devices will be supported, and new features will be added. MPLAB REAL ICE offers significant advantages over competitive emulators including low-cost, full-speed emulation, run-time variable watches, trace analysis, complex breakpoints, a ruggedized probe interface and long (up to three meters) interconnection cables.

29.9 MPLAB ICD 3 In-Circuit Debugger System

MPLAB ICD 3 In-Circuit Debugger System is Microchip's most cost effective high-speed hardware debugger/programmer for Microchip Flash Digital Signal Controller (DSC) and microcontroller (MCU) devices. It debugs and programs PIC® Flash microcontrollers and dsPIC® DSCs with the powerful, yet easy-to-use graphical user interface of MPLAB Integrated Development Environment (IDE).

The MPLAB ICD 3 In-Circuit Debugger probe is connected to the design engineer's PC using a high-speed USB 2.0 interface and is connected to the target with a connector compatible with the MPLAB ICD 2 or MPLAB REAL ICE systems (RJ-11). MPLAB ICD 3 supports all MPLAB ICD 2 headers.

29.10 PICkit 3 In-Circuit Debugger/ Programmer and PICkit 3 Debug Express

The MPLAB PICkit 3 allows debugging and programming of PIC® and dsPIC® Flash microcontrollers at a most affordable price point using the powerful graphical user interface of the MPLAB Integrated Development Environment (IDE). The MPLAB PICkit 3 is connected to the design engineer's PC using a full speed USB interface and can be connected to the target via an Microchip debug (RJ-11) connector (compatible with MPLAB ICD 3 and MPLAB REAL ICE). The connector uses two device I/O pins and the reset line to implement in-circuit debugging and In-Circuit Serial Programming™.

The PICkit 3 Debug Express include the PICkit 3, demo board and microcontroller, hookup cables and CDROM with user's guide, lessons, tutorial, compiler and MPLAB IDE software.

© 2011 Microchip Technology Inc.

29.11 PICkit 2 Development Programmer/Debugger and PICkit 2 Debug Express

The PICkit™ 2 Development Programmer/Debugger is a low-cost development tool with an easy to use interface for programming and debugging Microchip's Flash families of microcontrollers. The full featured Windows® programming interface supports baseline (PIC10F, PIC12F5xx, PIC16F5xx), midrange (PIC12F6xx, PIC16F), PIC18F, PIC24, dsPIC30, dsPIC33, and PIC32 families of 8-bit, 16-bit, and 32-bit microcontrollers, and many Microchip Serial EEPROM products. With Microchip's powerful MPLAB Integrated Development Environment (IDE) the PICkit™ 2 enables in-circuit debugging on most PIC® microcontrollers. In-Circuit-Debugging runs, halts and single steps the program while the PIC microcontroller is embedded in the application. When halted at a breakpoint, the file registers can be examined and modified.

The PICkit 2 Debug Express include the PICkit 2, demo board and microcontroller, hookup cables and CDROM with user's guide, lessons, tutorial, compiler and MPLAB IDE software.

29.12 MPLAB PM3 Device Programmer

The MPLAB PM3 Device Programmer is a universal, CE compliant device programmer with programmable voltage verification at V_{DDMIN} and V_{DDMAX} for maximum reliability. It features a large LCD display (128 x 64) for menus and error messages and a modular, detachable socket assembly to support various package types. The ICSP™ cable assembly is included as a standard item. In Stand-Alone mode, the MPLAB PM3 Device Programmer can read, verify and program PIC devices without a PC connection. It can also set code protection in this mode. The MPLAB PM3 connects to the host PC via an RS-232 or USB cable. The MPLAB PM3 has high-speed communications and optimized algorithms for quick programming of large memory devices and incorporates an MMC card for file storage and data applications.

29.13 Demonstration/Development Boards, Evaluation Kits, and Starter Kits

A wide variety of demonstration, development and evaluation boards for various PIC MCUs and dsPIC DSCs allows quick application development on fully functional systems. Most boards include prototyping areas for adding custom circuitry and provide application firmware and source code for examination and modification.

The boards support a variety of features, including LEDs, temperature sensors, switches, speakers, RS-232 interfaces, LCD displays, potentiometers and additional EEPROM memory.

The demonstration and development boards can be used in teaching environments, for prototyping custom circuits and for learning about various microcontroller applications.

In addition to the PICDEM™ and dsPICDEM™ demonstration/development board series of circuits, Microchip has a line of evaluation kits and demonstration software for analog filter design, KEELOQ® security ICs, CAN, IrDA®, PowerSmart battery management, SEEVAL® evaluation system, Sigma-Delta ADC, flow rate sensing, plus many more.

Also available are starter kits that contain everything needed to experience the specified device. This usually includes a single application and debug capability, all on one board.

Check the Microchip web page (www.microchip.com) for the complete list of demonstration, development and evaluation kits.

© 2011 Microchip Technology Inc.

30.0 ELECTRICAL CHARACTERISTICS

Absolute Maximum Ratings(†)

Ambient temperature under bias ..... -40°C to +125°C
Storage temperature ..... -65°C to +150°C
Voltage on any digital only I/O pin or $\overline{MCLR}$ with respect to V_{SS} (when $V_{DD} \geq 2.0V$) ..... -0.3V to 6.0V
Voltage on any digital only I/O pin or $\overline{MCLR}$ with respect to V_{SS} (when $V_{DD} < 2.0V$) ..... -0.3V to (V_{DD} + 4.0V)
Voltage on any combined digital and analog pin with respect to V_{SS} (except V_{DD}) ..... -0.3V to (V_{DD} + 0.3V)
Voltage on V_{DDCORE} with respect to V_{SS} ..... -0.3V to 2.75V
Voltage on V_{DD} with respect to V_{SS} ..... -0.3V to 4.0V
Voltage on V_{USB} with respect to V_{SS} ..... (V_{DD} – 0.3V) to 4.0V
Total power dissipation **(Note 1)** 1.0W
Maximum current out of V_{SS} pin ..... 300 mA
Maximum current into V_{DD} pin ..... 250 mA
Maximum output current sunk by any PORTB, PORTC and RA6 I/O pin ..... 25 mA
Maximum output current sunk by any PORTA (except RA6), PORTD and PORTE I/O pin ..... 4 mA
Maximum output current sourced by any PORTB, PORTC and RA6 I/O pin ..... 25 mA
Maximum output current sourced by any PORTA (except RA6), PORTD and PORTE I/O pin ..... 4 mA
Maximum current sunk by all ports ..... 200 mA
Maximum current sourced by all ports ..... 200 mA

Note 1: Power dissipation is calculated as follows:

$$P_{DIS} = V_{DD} \times \{I_{DD} - \sum I_{OH}\} + \sum \{(V_{DD} - V_{OH}) \times I_{OH}\} + \sum (V_{OL} \times I_{OL})$$

† **NOTICE:** Stresses above those listed under “Absolute Maximum Ratings” may cause permanent damage to the device. This is a stress rating only and functional operation of the device at those or any other conditions above those indicated in the operation listings of this specification is not implied. Exposure to maximum rating conditions for extended periods may affect device reliability.

FIGURE 30-1: PIC18F46J50 FAMILY VDD FREQUENCY GRAPH (INDUSTRIAL)

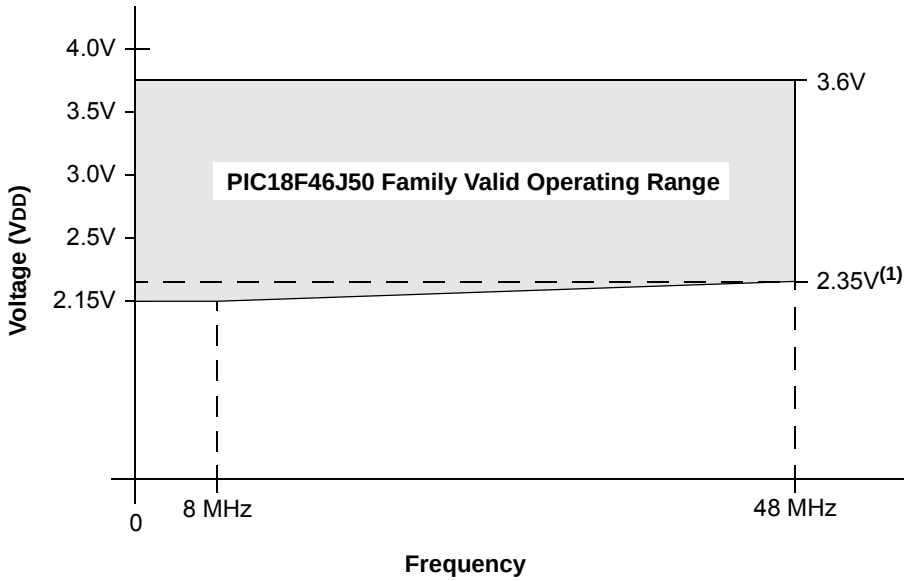

Note 1: When the USB module is enabled, VUSB should be provided 3.0V-3.6V while VDD must be ≥2.35V. When the USB module is not enabled, the wider limits shaded in grey apply. VUSB should be maintained ≥ VDD, but may optionally be high-impedance (without external pull-down) when the USB module is not in use.

FIGURE 30-2: PIC18LF46J50 FAMILY VDDCORE FREQUENCY GRAPH (INDUSTRIAL)(1)

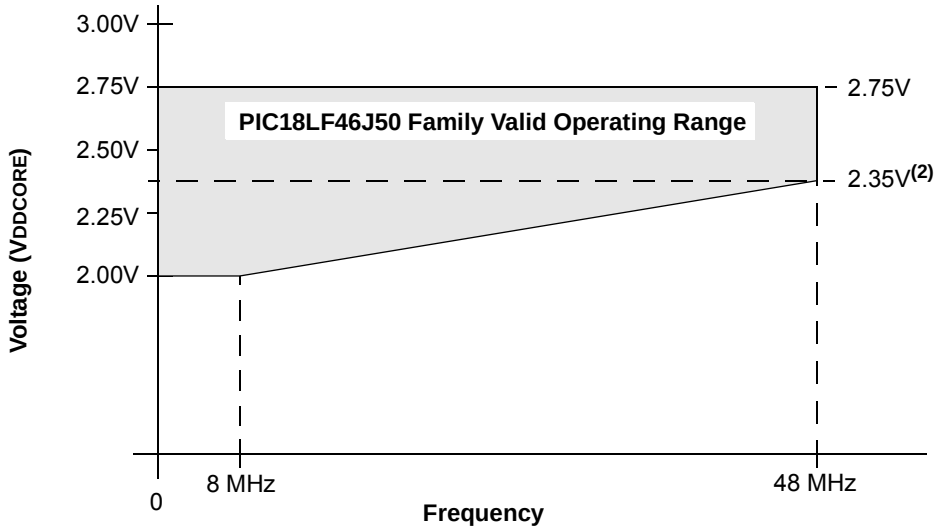

Note 1: VDD and VDDCORE must be maintained so that VDDCORE ≤ VDD.

2: When the USB module is enabled, VUSB should be provided 3.0V-3.6V while VDDCORE must be ≥2.35V. When the USB module is not enabled, the wider limits shaded in grey apply. VUSB should be maintained ≥ VDD, but may optionally be high-impedance (without external pull-down) when the USB module is not in use.

© 2011 Microchip Technology Inc.

30.1 DC Characteristics: Supply Voltage PIC18F46J50 Family (Industrial)

PIC18F46J50 Family			Standard Operating Conditions (unless otherwise stated) Operating temperature -40°C ≤ TA ≤ +85°C for industrial				
Param No.	**Symbol**	**Characteristic**	**Min**	**Typ**	**Max**	**Units**	**Conditions**
D001	VDD	**Supply Voltage**	2.15	—	3.6	V	PIC18F4XJ50, PIC18F2XJ50
D001A	VDD	**Supply Voltage**	2.0	—	3.6	V	PIC18LF4XJ50, PIC18LF2XJ50
D001B	VDDCORE	**External Supply for Microcontroller Core**	2.0	—	2.75	V	PIC18LF4XJ50, PIC18LF2XJ50
D001C	AVDD	**Analog Supply Voltage**	VDD – 0.3	—	VDD + 0.3	V	
D001D	AVSS	**Analog Ground Potential**	VSS – 0.3	—	VSS + 0.3	V	
D001E	VUSB	**USB Supply Voltage**	3.0	3.3	3.6	V	USB module enabled(2)
D002	VDR	**RAM Data Retention Voltage(1)**	1.5	—	—	V	
D003	VPOR	**VDD Start Voltage** to Ensure Internal Power-on Reset Signal	—	—	0.7	V	See **Section 5.3 "Power-on Reset (POR)"** for details
D004	SVDD	**VDD Rise Rate** to Ensure Internal Power-on Reset Signal	0.05	—	—	V/ms	See **Section 5.3 "Power-on Reset (POR)"** for details
D005	VBOR(3)	**VDDCORE Brown-out Reset Voltage**	1.9	2.0	2.2	V	PIC18F4XJ50, PIC18F2XJ50 only
D006	VDSBOR	**VDD Brown-out Reset Voltage**	—	1.8	—	V	DSBOREN = 1 on "LF" device or "F" device in Deep Sleep

Note 1: This is the limit to which VDDCORE can be lowered in Sleep mode, or during a device Reset, without losing RAM data.

2: VUSB should always be maintained ≥ VDD, but may be left floating (high impedance, without external pull-down) when the USB module is disabled and RC4/RC5 will not be used as general purpose inputs.

3: The device will operate normally until Brown-out Reset occurs, even though VDD may be below VDDMIN.

30.2 DC Characteristics: Power-Down and Supply Current PIC18F46J50 Family (Industrial)

PIC18LF46J50 Family		Standard Operating Conditions (unless otherwise stated) Operating temperature -40°C ≤ TA ≤ +85°C for industrial					
PIC18F46J50 Family		**Standard Operating Conditions (unless otherwise stated)** Operating temperature -40°C ≤ TA ≤ +85°C for industrial					
Param No.	**Device**	**Typ**	**Max**	**Units**	**Conditions**		
	Power-Down Current (IPD)(1) – Sleep mode						
	PIC18LFXXJ50	0.01	1.4	µA	-40°C	VDD = 2.0V, VDDCORE = 2.0V	**Sleep** mode, REGSLP = 1
		0.06	1.4	µA	+25°C		
		0.52	6.0	µA	+60°C		
		1.8	10.2	µA	+85°C		
	PIC18LFXXJ50	0.035	1.5	µA	-40°C	VDD = 2.5V, VDDCORE = 2.5V	
		0.13	1.5	µA	+25°C		
		0.63	8.0	µA	+60°C		
		2.2	12.6	µA	+85°C		
	PIC18FXXJ50	2.4	6.0	µA	-40°C	VDD = 2.15V Vddcore = 10 µF Capacitor	
		3.0	6.0	µA	+25°C		
		3.8	8.0	µA	+60°C		
		5.6	16	µA	+85°C		
	PIC18FXXJ50	3.5	7.0	µA	-40°C	VDD = 3.3V Vddcore = 10 µF Capacitor	
		3.2	7.0	µA	+25°C		
		4.2	10	µA	+60°C		
		6.4	19	µA	+85°C		
	Power-Down Current (IPD)(1) – Deep Sleep mode						
	PIC18FXXJ50	1	25	nA	-40°C	VDD = 2.15V, VDDCORE = 10 µF Capacitor	**Deep Sleep** mode
		15	100	nA	+25°C		
		115	250	nA	+60°C		
		0.46	1.0	µA	+85°C		
	PIC18FXXJ50	3	50	nA	-40°C	VDD = 3.3V, VDDCORE = 10 µF Capacitor	
		33	150	nA	+25°C		
		191	389	nA	+60°C		
		0.65	2.0	µA	+85°C		

Note 1: The power-down current in Sleep mode does not depend on the oscillator type. Power-down current is measured with the part in Sleep mode, with all I/O pins in a high-impedance state and tied to VDD or VSS, and all features that add delta current are disabled (such as WDT, Timer1 oscillator, BOR, etc.).

2: The supply current is mainly a function of operating voltage, frequency and mode. Other factors, such as I/O pin loading and switching rate, oscillator type and circuit, internal code execution pattern and temperature, also have an impact on the current consumption. All features that add delta current are disabled (USB module, WDT, etc.). The test conditions for all IDD measurements in active operation mode are:
OSC1 = external square wave, from rail-to-rail; all I/O pins tri-stated, pulled to VDD/VSS;
$\overline{MCLR}$ = VDD; WDT disabled unless otherwise specified.

3: Low-power Timer1 with standard, low-cost 32 kHz crystals has an operating temperature range of -10°C to +70°C. Extended temperature crystals are available at a much higher cost.

4: This is the module differential current when the USB module is enabled and clocked at 48 MHz, but with no USB cable attached. When the USB cable is attached, or data is being transmitted, the current consumption may be much higher (see **Section 22.6.4 "USB Transceiver Current Consumption"**). During USB Suspend mode (USBEN = 1, SUSPND = 1, bus in Idle state), the USB module current will be dominated by the D+ or D- pull-up resistor. The integrated pull-up resistors use "resistor switching" according to the `resistor_ecn` supplement to the *"USB 2.0 Specifications"*, and therefore, may be as low as 900Ω during Idle conditions.

© 2011 Microchip Technology Inc.

30.2 DC Characteristics: Power-Down and Supply Current PIC18F46J50 Family (Industrial) (Continued)

PIC18LF46J50 Family		Standard Operating Conditions (unless otherwise stated) Operating temperature -40°C ≤ TA ≤ +85°C for industrial					
PIC18F46J50 Family		**Standard Operating Conditions (unless otherwise stated)** Operating temperature -40°C ≤ TA ≤ +85°C for industrial					
Param No.	**Device**	**Typ**	**Max**	**Units**	**Conditions**		
	Supply Current (IDD)(2)						
	PIC18LFXXJ50	5.3	14.2	µA	-40°C	VDD = 2.0V, VDDCORE = 2.0V	FOSC = 31 kHz (**RC_RUN** mode, Internal RC Oscillator, INTSRC = 0)
		6.2	14.2	µA	+25°C		
		8.5	19.0	µA	+85°C		
	PIC18LFXXJ50	8.0	16.5	µA	-40°C	VDD = 2.5V, VDDCORE = 2.5V	
		8.7	16.5	µA	+25°C		
		11.3	22.4	µA	+85°C		
	PIC18FXXJ50	37	77	µA	-40°C	VDD = 2.15V VDDCORE = 10 µF Capacitor	
		48	77	µA	+25°C		
		60	93	µA	+85°C		
	PIC18FXXJ50	45	84	µA	-40°C	VDD = 3.3V VDDCORE = 10 µF Capacitor	
		54	84	µA	+25°C		
		65	108	µA	+85°C		
	PIC18LFXXJ50	1.1	1.5	mA	-40°C	VDD = 2.0V, VDDCORE = 2.0	FOSC = 4 MHz, **RC_RUN** mode, Internal RC Oscillator
		1.1	1.5	mA	+25°C		
		1.2	1.6	mA	+85°C		
	PIC18LFXXJ50	1.5	1.7	mA	-40°C	VDD = 2.5V, VDDCORE = 2.5V	
		1.6	1.7	mA	+25°C		
		1.6	1.9	mA	+85°C		
	PIC18FXXJ50	1.3	2.6	mA	-40°C	VDD = 2.15V, VDDCORE = 10 µF Capacitor	
		1.4	2.6	mA	+25°C		
		1.4	2.8	mA	+85°C		
	PIC18FXXJ50	1.6	2.9	mA	-40°C	VDD = 3.3V, VDDCORE = 10 µF Capacitor	
		1.6	2.9	mA	+25°C		
		1.6	3.0	mA	+85°C		

Note 1: The power-down current in Sleep mode does not depend on the oscillator type. Power-down current is measured with the part in Sleep mode, with all I/O pins in a high-impedance state and tied to VDD or VSS, and all features that add delta current are disabled (such as WDT, Timer1 oscillator, BOR, etc.).

2: The supply current is mainly a function of operating voltage, frequency and mode. Other factors, such as I/O pin loading and switching rate, oscillator type and circuit, internal code execution pattern and temperature, also have an impact on the current consumption. All features that add delta current are disabled (USB module, WDT, etc.). The test conditions for all IDD measurements in active operation mode are:
OSC1 = external square wave, from rail-to-rail; all I/O pins tri-stated, pulled to VDD/VSS;
$\overline{\text{MCLR}}$ = VDD; WDT disabled unless otherwise specified.

3: Low-power Timer1 with standard, low-cost 32 kHz crystals has an operating temperature range of -10°C to +70°C. Extended temperature crystals are available at a much higher cost.

4: This is the module differential current when the USB module is enabled and clocked at 48 MHz, but with no USB cable attached. When the USB cable is attached, or data is being transmitted, the current consumption may be much higher (see **Section 22.6.4 "USB Transceiver Current Consumption"**). During USB Suspend mode (USBEN = 1, SUSPND = 1, bus in Idle state), the USB module current will be dominated by the D+ or D- pull-up resistor. The integrated pull-up resistors use "resistor switching" according to the `resistor_ecn` supplement to the *"USB 2.0 Specifications"*, and therefore, may be as low as 900Ω during Idle conditions.

30.2 DC Characteristics: Power-Down and Supply Current PIC18F46J50 Family (Industrial) (Continued)

PIC18LF46J50 Family		Standard Operating Conditions (unless otherwise stated) Operating temperature -40°C ≤ TA ≤ +85°C for industrial					
PIC18F46J50 Family		**Standard Operating Conditions (unless otherwise stated)** Operating temperature -40°C ≤ TA ≤ +85°C for industrial					
Param No.	**Device**	**Typ**	**Max**	**Units**	**Conditions**		
	Supply Current (IDD)(2)						
	PIC18LFXXJ50	1.9	3.6	mA	-40°C	VDD = 2.0V, VDDCORE = 2.0V	FOSC = 8 MHz, **RC_RUN** mode, Internal RC Oscillator
		2.0	3.8	mA	+25°C		
		2.0	3.8	mA	+85°C		
	PIC18LFXXJ50	2.8	4.8	mA	-40°C	VDD = 2.5V, VDDCORE = 2.5V	
		2.8	4.8	mA	+25°C		
		2.8	4.9	mA	+85°C		
	PIC18FXXJ50	2.3	4.2	mA	-40°C	VDD = 2.15V, VDDCORE = 10 µF Capacitor	
		2.3	4.2	mA	+25°C		
		2.4	4.5	mA	+85°C		
	PIC18FXXJ50	2.8	5.1	mA	-40°C	VDD = 3.3V, VDDCORE = 10 µF Capacitor	
		2.8	5.1	mA	+25°C		
		2.8	5.4	mA	+85°C		
	PIC18LFXXJ50	1.9	9.4	µA	-40°C	VDD = 2.0V, VDDCORE = 2.0V	FOSC = 31 kHz, **RC_IDLE** mode, Internal RC Oscillator, INTSRC = 0
		2.3	9.4	µA	+25°C		
		4.5	17.2	µA	+85°C		
	PIC18LFXXJ50	2.4	10.5	µA	-40°C	VDD = 2.5V, VDDCORE = 2.5V	
		2.8	10.5	µA	+25°C		
		5.4	19.5	µA	+85°C		
	PIC18FXXJ50	33.3	75	µA	-40°C	VDD = 2.15V, VDDCORE = 10 µF Capacitor	
		43.8	75	µA	+25°C		
		55.3	92	µA	+85°C		
	PIC18FXXJ50	36.1	82	µA	-40°C	VDD = 3.3V, VDDCORE = 10 µF Capacitor	
		44.5	82	µA	+25°C		
		56.3	105	µA	+85°C		

Note 1: The power-down current in Sleep mode does not depend on the oscillator type. Power-down current is measured with the part in Sleep mode, with all I/O pins in a high-impedance state and tied to VDD or VSS, and all features that add delta current are disabled (such as WDT, Timer1 oscillator, BOR, etc.).

2: The supply current is mainly a function of operating voltage, frequency and mode. Other factors, such as I/O pin loading and switching rate, oscillator type and circuit, internal code execution pattern and temperature, also have an impact on the current consumption. All features that add delta current are disabled (USB module, WDT, etc.). The test conditions for all IDD measurements in active operation mode are:
OSC1 = external square wave, from rail-to-rail; all I/O pins tri-stated, pulled to VDD/VSS;
$\overline{MCLR}$ = VDD; WDT disabled unless otherwise specified.

3: Low-power Timer1 with standard, low-cost 32 kHz crystals has an operating temperature range of -10°C to +70°C. Extended temperature crystals are available at a much higher cost.

4: This is the module differential current when the USB module is enabled and clocked at 48 MHz, but with no USB cable attached. When the USB cable is attached, or data is being transmitted, the current consumption may be much higher (see **Section 22.6.4 "USB Transceiver Current Consumption"**). During USB Suspend mode (USBEN = 1, SUSPND = 1, bus in Idle state), the USB module current will be dominated by the D+ or D- pull-up resistor. The integrated pull-up resistors use "resistor switching" according to the `resistor_ecn` supplement to the *"USB 2.0 Specifications"*, and therefore, may be as low as 900Ω during Idle conditions.

© 2011 Microchip Technology Inc.

30.2 DC Characteristics: Power-Down and Supply Current PIC18F46J50 Family (Industrial) (Continued)

PIC18LF46J50 Family		Standard Operating Conditions (unless otherwise stated) Operating temperature -40°C ≤ TA ≤ +85°C for industrial					
PIC18F46J50 Family		**Standard Operating Conditions (unless otherwise stated)** Operating temperature -40°C ≤ TA ≤ +85°C for industrial					
Param No.	**Device**	**Typ**	**Max**	**Units**	**Conditions**		
	Supply Current (IDD)(2)						
	PIC18LFXXJ50	0.531	0.980	mA	-40°C	VDD = 2.0V, VDDCORE = 2.0V	FOSC = 4 MHz, **RC_IDLE** mode, Internal RC Oscillator
		0.571	0.980	mA	+25°C		
		0.608	1.12	mA	+85°C		
	PIC18LFXXJ50	0.625	1.14	mA	-40°C	VDD = 2.5V, VDDCORE = 2.5V	
		0.681	1.14	mA	+25°C		
		0.725	1.25	mA	+85°C		
	PIC18FXXJ50	0.613	1.21	mA	-40°C	VDD = 2.15V, VDDCORE = 10 µF Capacitor	
		0.680	1.21	mA	+25°C		
		0.730	1.30	mA	+85°C		
	PIC18FXXJ50	0.673	1.27	mA	-40°C	VDD = 3.3V, VDDCORE = 10 µF Capacitor	
		0.728	1.27	mA	+25°C		
		0.779	1.45	mA	+85°C		
	PIC18LFXXJ50	0.750	1.4	mA	-40°C	VDD = 2.0V, VDDCORE = 2.0V	FOSC = 8 MHz, **RC_IDLE** mode, Internal RC Oscillator
		0.797	1.5	mA	+25°C		
		0.839	1.6	mA	+85°C		
	PIC18LFXXJ50	0.91	2.4	mA	-40°C	VDD = 2.5V, VDDCORE = 2.5V	
		0.96	2.4	mA	+25°C		
		1.01	2.5	mA	+85°C		
	PIC18FXXJ50	0.87	2.1	mA	-40°C	VDD = 2.15V, VDDCORE = 10 µF Capacitor	
		0.93	2.1	mA	+25°C		
		0.98	2.3	mA	+85°C		
	PIC18FXXJ50	0.95	2.6	mA	-40°C	VDD = 3.3V, VDDCORE = 10 µF Capacitor	
		1.01	2.6	mA	+25°C		
		1.06	2.7	mA	+85°C		

Note 1: The power-down current in Sleep mode does not depend on the oscillator type. Power-down current is measured with the part in Sleep mode, with all I/O pins in a high-impedance state and tied to VDD or VSS, and all features that add delta current are disabled (such as WDT, Timer1 oscillator, BOR, etc.).

2: The supply current is mainly a function of operating voltage, frequency and mode. Other factors, such as I/O pin loading and switching rate, oscillator type and circuit, internal code execution pattern and temperature, also have an impact on the current consumption. All features that add delta current are disabled (USB module, WDT, etc.). The test conditions for all IDD measurements in active operation mode are:
OSC1 = external square wave, from rail-to-rail; all I/O pins tri-stated, pulled to VDD/VSS;
$\overline{\text{MCLR}}$ = VDD; WDT disabled unless otherwise specified.

3: Low-power Timer1 with standard, low-cost 32 kHz crystals has an operating temperature range of -10°C to +70°C. Extended temperature crystals are available at a much higher cost.

4: This is the module differential current when the USB module is enabled and clocked at 48 MHz, but with no USB cable attached. When the USB cable is attached, or data is being transmitted, the current consumption may be much higher (see **Section 22.6.4 "USB Transceiver Current Consumption"**). During USB Suspend mode (USBEN = 1, SUSPND = 1, bus in Idle state), the USB module current will be dominated by the D+ or D- pull-up resistor. The integrated pull-up resistors use "resistor switching" according to the `resistor_ecn` supplement to the *"USB 2.0 Specifications"*, and therefore, may be as low as 900Ω during Idle conditions.

30.2 DC Characteristics: Power-Down and Supply Current PIC18F46J50 Family (Industrial) (Continued)

PIC18LF46J50 Family		Standard Operating Conditions (unless otherwise stated) Operating temperature -40°C ≤ TA ≤ +85°C for industrial					
PIC18F46J50 Family		**Standard Operating Conditions (unless otherwise stated)** Operating temperature -40°C ≤ TA ≤ +85°C for industrial					
Param No.	**Device**	**Typ**	**Max**	**Units**	**Conditions**		
	Supply Current (IDD)(2)						
	PIC18LFXXJ50	0.879	1.25	mA	-40°C	VDD = 2.0V, VDDCORE = 2.0V	FOSC = 4 MHz, **PRI_RUN** mode, EC Oscillator
		0.881	1.25	mA	+25°C		
		0.891	1.36	mA	+85°C		
	PIC18LFXXJ50	1.35	1.70	mA	-40°C	VDD = 2.5V, VDDCORE = 2.5V	
		1.30	1.70	mA	+25°C		
		1.27	1.82	mA	+85°C		
	PIC18FXXJ50	1.09	1.60	mA	-40°C	VDD = 2.15V, VDDCORE = 10 µF Capacitor	
		1.09	1.60	mA	+25°C		
		1.11	1.70	mA	+85°C		
	PIC18FXXJ50	1.36	1.95	mA	-40°C	VDD = 3.3V, VDDCORE = 10 µF Capacitor	
		1.36	1.89	mA	+25°C		
		1.41	1.92	mA	+85°C		
	PIC18LFXXJ50	10.9	14.8	mA	-40°C	VDD = 2.5V, VDDCORE = 2.5V	FOSC = 48 MHz, **PRI_RUN** mode, EC Oscillator
		10.6	14.8	mA	+25°C		
		10.6	15.2	mA	+85°C		
	PIC18FXXJ50	12.9	23.2	mA	-40°C	VDD = 3.3V, VDDCORE = 10 µF Capacitor	
		12.8	22.7	mA	+25°C		
		12.7	22.7	mA	+85°C		

Note 1: The power-down current in Sleep mode does not depend on the oscillator type. Power-down current is measured with the part in Sleep mode, with all I/O pins in a high-impedance state and tied to VDD or VSS, and all features that add delta current are disabled (such as WDT, Timer1 oscillator, BOR, etc.).

2: The supply current is mainly a function of operating voltage, frequency and mode. Other factors, such as I/O pin loading and switching rate, oscillator type and circuit, internal code execution pattern and temperature, also have an impact on the current consumption. All features that add delta current are disabled (USB module, WDT, etc.). The test conditions for all IDD measurements in active operation mode are:
OSC1 = external square wave, from rail-to-rail; all I/O pins tri-stated, pulled to VDD/VSS;
$\overline{MCLR}$ = VDD; WDT disabled unless otherwise specified.

3: Low-power Timer1 with standard, low-cost 32 kHz crystals has an operating temperature range of -10°C to +70°C. Extended temperature crystals are available at a much higher cost.

4: This is the module differential current when the USB module is enabled and clocked at 48 MHz, but with no USB cable attached. When the USB cable is attached, or data is being transmitted, the current consumption may be much higher (see **Section 22.6.4 "USB Transceiver Current Consumption"**). During USB Suspend mode (USBEN = 1, SUSPND = 1, bus in Idle state), the USB module current will be dominated by the D+ or D- pull-up resistor. The integrated pull-up resistors use "resistor switching" according to the `resistor_ecn` supplement to the *"USB 2.0 Specifications"*, and therefore, may be as low as 900Ω during Idle conditions.

© 2011 Microchip Technology Inc.

30.2 DC Characteristics: Power-Down and Supply Current PIC18F46J50 Family (Industrial) (Continued)

PIC18LF46J50 Family		Standard Operating Conditions (unless otherwise stated) Operating temperature -40°C ≤ TA ≤ +85°C for industrial					
PIC18F46J50 Family		**Standard Operating Conditions (unless otherwise stated)** Operating temperature -40°C ≤ TA ≤ +85°C for industrial					
Param No.	**Device**	**Typ**	**Max**	**Units**	**Conditions**		
	Supply Current (IDD)(2)						
	PIC18LFXXJ50	0.28	0.70	mA	-40°C	VDD = 2.0V, VDDCORE = 2.0V	FOSC = 4 MHz **PRI_IDLE** mode, EC Oscillator
		0.30	0.70	mA	+25°C		
		0.34	0.75	mA	+85°C		
	PIC18LFXXJ50	0.37	1.0	mA	-40°C	VDD = 2.5V, VDDCORE = 2.5V	
		0.40	1.0	mA	+25°C		
		0.50	1.1	mA	+85°C		
	PIC18FXXJ50	0.36	0.85	mA	-40°C	VDD = 2.15V, VDDCORE = 10 µF Capacitor	
		0.38	0.85	mA	+25°C		
		0.41	0.90	mA	+85°C		
	PIC18FXXJ50	0.45	1.3	mA	-40°C	VDD = 3.3V, VDDCORE = 10 µF Capacitor	
		0.48	1.2	mA	+25°C		
		0.55	1.2	mA	+85°C		
	PIC18LFXXJ50	4.5	6.5	mA	-40°C	VDD = 2.5V, VDDCORE = 2.5V	FOSC = 48 MHz **PRI_IDLE** mode, EC Oscillator
		4.5	6.5	mA	+25°C		
		4.6	6.5	mA	+85°C		
	PIC18FXXJ50	4.8	12.4	mA	-40°C	VDD = 3.3V, VDDCORE = 10 µF Capacitor	
		4.9	11.5	mA	+25°C		
		5.1	11.5	mA	+85°C		

Note 1: The power-down current in Sleep mode does not depend on the oscillator type. Power-down current is measured with the part in Sleep mode, with all I/O pins in a high-impedance state and tied to VDD or VSS, and all features that add delta current are disabled (such as WDT, Timer1 oscillator, BOR, etc.).

2: The supply current is mainly a function of operating voltage, frequency and mode. Other factors, such as I/O pin loading and switching rate, oscillator type and circuit, internal code execution pattern and temperature, also have an impact on the current consumption. All features that add delta current are disabled (USB module, WDT, etc.). The test conditions for all IDD measurements in active operation mode are:
OSC1 = external square wave, from rail-to-rail; all I/O pins tri-stated, pulled to VDD/VSS;
$\overline{MCLR}$ = VDD; WDT disabled unless otherwise specified.

3: Low-power Timer1 with standard, low-cost 32 kHz crystals has an operating temperature range of -10°C to +70°C. Extended temperature crystals are available at a much higher cost.

4: This is the module differential current when the USB module is enabled and clocked at 48 MHz, but with no USB cable attached. When the USB cable is attached, or data is being transmitted, the current consumption may be much higher (see **Section 22.6.4 "USB Transceiver Current Consumption"**). During USB Suspend mode (USBEN = 1, SUSPND = 1, bus in Idle state), the USB module current will be dominated by the D+ or D- pull-up resistor. The integrated pull-up resistors use "resistor switching" according to the `resistor_ecn` supplement to the *"USB 2.0 Specifications"*, and therefore, may be as low as 900Ω during Idle conditions.

30.2 DC Characteristics: Power-Down and Supply Current PIC18F46J50 Family (Industrial) (Continued)

PIC18LF46J50 Family		Standard Operating Conditions (unless otherwise stated) Operating temperature -40°C ≤ TA ≤ +85°C for industrial					
PIC18F46J50 Family		**Standard Operating Conditions (unless otherwise stated)** Operating temperature -40°C ≤ TA ≤ +85°C for industrial					
Param No.	**Device**	**Typ**	**Max**	**Units**	**Conditions**		
	Supply Current (IDD)(2)						
	PIC18LFXXJ50	8.2	11	mA	-40°C	VDD = 2.5V, VDDCORE = 2.5V	FOSC = 24 MHz **PRI_RUN** mode, ECPLL Oscillator (4 MHz Input)
		8.1	11	mA	+25°C		
		8.0	10	mA	+85°C		
	PIC18FXXJ50	8.1	15	mA	-40°C	VDD = 3.3V, VDDCORE = 10 µF Capacitor	
		8.1	14	mA	+25°C		
		8.1	14	mA	+85°C		
	PIC18LFXXJ50	12	14	mA	-40°C	VDD = 2.5V, VDDCORE = 2.5V	FOSC = 48 MHz **PRI_RUN** mode, ECPLL Oscillator (4 MHz Input)
		12	14	mA	+25°C		
		11	14	mA	+85°C		
	PIC18FXXJ50	14	24	mA	-40°C	VDD = 3.3V, VDDCORE = 10 µF Capacitor	
		14	23	mA	+25°C		
		14	23	mA	+85°C		

Note 1: The power-down current in Sleep mode does not depend on the oscillator type. Power-down current is measured with the part in Sleep mode, with all I/O pins in a high-impedance state and tied to VDD or VSS, and all features that add delta current are disabled (such as WDT, Timer1 oscillator, BOR, etc.).

2: The supply current is mainly a function of operating voltage, frequency and mode. Other factors, such as I/O pin loading and switching rate, oscillator type and circuit, internal code execution pattern and temperature, also have an impact on the current consumption. All features that add delta current are disabled (USB module, WDT, etc.). The test conditions for all IDD measurements in active operation mode are:
OSC1 = external square wave, from rail-to-rail; all I/O pins tri-stated, pulled to VDD/VSS;
MCLR = VDD; WDT disabled unless otherwise specified.

3: Low-power Timer1 with standard, low-cost 32 kHz crystals has an operating temperature range of -10°C to +70°C. Extended temperature crystals are available at a much higher cost.

4: This is the module differential current when the USB module is enabled and clocked at 48 MHz, but with no USB cable attached. When the USB cable is attached, or data is being transmitted, the current consumption may be much higher (see **Section 22.6.4 "USB Transceiver Current Consumption"**). During USB Suspend mode (USBEN = 1, SUSPND = 1, bus in Idle state), the USB module current will be dominated by the D+ or D- pull-up resistor. The integrated pull-up resistors use "resistor switching" according to the `resistor_ecn` supplement to the *"USB 2.0 Specifications"*, and therefore, may be as low as 900Ω during Idle conditions.

© 2011 Microchip Technology Inc.

30.2 DC Characteristics: Power-Down and Supply Current PIC18F46J50 Family (Industrial) (Continued)

PIC18LF46J50 Family		Standard Operating Conditions (unless otherwise stated) Operating temperature -40°C ≤ TA ≤ +85°C for industrial					
PIC18F46J50 Family		**Standard Operating Conditions (unless otherwise stated)** Operating temperature -40°C ≤ TA ≤ +85°C for industrial					
Param No.	**Device**	**Typ**	**Max**	**Units**	**Conditions**		
	Supply Current (IDD)(2)						
	PIC18LFXXJ50	9.9	45	µA	-40°C	VDD = 2.5V, VDDCORE = 2.5V	FOSC = 32 kHz(3) **SEC_RUN** mode, LPT1OSC = 0
		11	45	µA	+25°C		
		13	61	µA	+85°C		
	PIC18FXXJ50	39	95	µA	-40°C	VDD = 2.15V, VDDCORE = 10 µF Capacitor	
		50	95	µA	+25°C		
		57	105	µA	+85°C		
	PIC18FXXJ50	42	110	µA	-40°C	VDD = 3.3V, VDDCORE = 10 µF Capacitor	
		54	110	µA	+25°C		
		57	150	µA	+85°C		
	PIC18LFXXJ50	3.5	31	µA	-40°C	VDD = 2.5V, VDDCORE = 2.5V	FOSC = 32 kHz(3) **SEC_IDLE** mode, LPT1OSC = 0
		3.8	31	µA	+25°C		
		4.3	50	µA	+85°C		
	PIC18FXXJ50	34	87	µA	-40°C	VDD = 2.15V, VDDCORE = 10 µF Capacitor	
		45	89	µA	+25°C		
		56	97	µA	+85°C		
	PIC18FXXJ50	35	100	µA	-40°C	VDD = 3.3V, VDDCORE = 10 µF Capacitor	
		46	100	µA	+25°C		
		56	140	µA	+85°C		

Note 1: The power-down current in Sleep mode does not depend on the oscillator type. Power-down current is measured with the part in Sleep mode, with all I/O pins in a high-impedance state and tied to VDD or VSS, and all features that add delta current are disabled (such as WDT, Timer1 oscillator, BOR, etc.).

2: The supply current is mainly a function of operating voltage, frequency and mode. Other factors, such as I/O pin loading and switching rate, oscillator type and circuit, internal code execution pattern and temperature, also have an impact on the current consumption. All features that add delta current are disabled (USB module, WDT, etc.). The test conditions for all IDD measurements in active operation mode are:
OSC1 = external square wave, from rail-to-rail; all I/O pins tri-stated, pulled to VDD/VSS;
$\overline{MCLR}$ = VDD; WDT disabled unless otherwise specified.

3: Low-power Timer1 with standard, low-cost 32 kHz crystals has an operating temperature range of -10°C to +70°C. Extended temperature crystals are available at a much higher cost.

4: This is the module differential current when the USB module is enabled and clocked at 48 MHz, but with no USB cable attached. When the USB cable is attached, or data is being transmitted, the current consumption may be much higher (see **Section 22.6.4 "USB Transceiver Current Consumption"**). During USB Suspend mode (USBEN = 1, SUSPND = 1, bus in Idle state), the USB module current will be dominated by the D+ or D- pull-up resistor. The integrated pull-up resistors use "resistor switching" according to the `resistor_ecn` supplement to the *"USB 2.0 Specifications"*, and therefore, may be as low as 900Ω during Idle conditions.

30.2 DC Characteristics: Power-Down and Supply Current PIC18F46J50 Family (Industrial) (Continued)

PIC18LF46J50 Family		Standard Operating Conditions (unless otherwise stated) Operating temperature -40°C ≤ TA ≤ +85°C for industrial					
PIC18F46J50 Family		**Standard Operating Conditions (unless otherwise stated)** Operating temperature -40°C ≤ TA ≤ +85°C for industrial					
Param No.	**Device**	**Typ**	**Max**	**Units**	**Conditions**		
	Module Differential Currents (ΔIWDT, ΔIHLVD, ΔIOSCB, ΔIAD, ΔIUSB)						
	Watchdog Timer	0.84	8.0	µA	-40°C	VDD = 2.5V, VDDCORE = 2.5V	PIC18LFXXJ50
		0.96	8.0	µA	+25°C		
		0.97	10.4	µA	+85°C		
		0.65	7.0	µA	-40°C	VDD = 2.15V, VDDCORE = 10 µF Capacitor	PIC18FXXJ50
		0.78	7.0	µA	+25°C		
		0.77	10	µA	+85°C		
		1.3	12.1	µA	-40°C	VDD = 3.3V, VDDCORE = 10 µF Capacitor	
		1.3	12.1	µA	+25°C		
		1.3	13.6	µA	+85°C		
D022B (ΔIHLVD)	**High/Low-Voltage Detect**	3.9	8.0	µA	-40°C	VDD = 2.5V, VDDCORE = 2.5V	PIC18LFXXJ50
		4.7	8.0	µA	+25°C		
		5.4	9.0	µA	+85°C		
		2.6	6.0	µA	-40°C	VDD = 2.15V, VDDCORE = 10 µF Capacitor	PIC18FXXJ50
		3.1	6.0	µA	+25°C		
		3.5	8.0	µA	+85°C		
		3.5	9.0	µA	-40°C	VDD = 3.3V, VDDCORE = 10 µF Capacitor	
		4.1	9.0	µA	+25°C		
		4.5	12	µA	+85°C		
D025 (ΔIOSCB)	**Real-Time Clock/Calendar with Low-Power Timer1 Oscillator**	0.80	4.0	µA	-40°C	VDD = 2.15V, VDDCORE = 10 µF Capacitor	PIC18FXXJ50 32.768 kHz(3), T1OSCEN = 1, LPT1OSC = 0
		0.83	4.5	µA	+25°C		
		0.95	4.5	µA	+60°C		
		1.2	4.5	µA	+85°C		
		0.75	4.5	µA	-40°C	VDD = 2.5V, VDDCORE = 10 µF Capacitor	
		0.92	5.0	µA	+25°C		
		1.1	5.0	µA	+60°C		
		1.1	5.0	µA	+85°C		
		0.95	6.5	µA	-40°C	VDD = 3.3V, VDDCORE = 10 µF Capacitor	
		1.1	6.5	µA	+25°C		
		1.2	8.0	µA	+60°C		
		1.4	8.0	µA	+85°C		

Note 1: The power-down current in Sleep mode does not depend on the oscillator type. Power-down current is measured with the part in Sleep mode, with all I/O pins in a high-impedance state and tied to VDD or VSS, and all features that add delta current are disabled (such as WDT, Timer1 oscillator, BOR, etc.).

2: The supply current is mainly a function of operating voltage, frequency and mode. Other factors, such as I/O pin loading and switching rate, oscillator type and circuit, internal code execution pattern and temperature, also have an impact on the current consumption. All features that add delta current are disabled (USB module, WDT, etc.). The test conditions for all IDD measurements in active operation mode are:
OSC1 = external square wave, from rail-to-rail; all I/O pins tri-stated, pulled to VDD/VSS;
$\overline{MCLR}$ = VDD; WDT disabled unless otherwise specified.

3: Low-power Timer1 with standard, low-cost 32 kHz crystals has an operating temperature range of -10°C to +70°C. Extended temperature crystals are available at a much higher cost.

4: This is the module differential current when the USB module is enabled and clocked at 48 MHz, but with no USB cable attached. When the USB cable is attached, or data is being transmitted, the current consumption may be much higher (see **Section 22.6.4 "USB Transceiver Current Consumption"**). During USB Suspend mode (USBEN = 1, SUSPND = 1, bus in Idle state), the USB module current will be dominated by the D+ or D- pull-up resistor. The integrated pull-up resistors use "resistor switching" according to the `resistor_ecn` supplement to the *"USB 2.0 Specifications"*, and therefore, may be as low as 900Ω during Idle conditions.

© 2011 Microchip Technology Inc.

30.2 DC Characteristics: Power-Down and Supply Current PIC18F46J50 Family (Industrial) (Continued)

PIC18LF46J50 Family		Standard Operating Conditions (unless otherwise stated) Operating temperature -40°C ≤ TA ≤ +85°C for industrial					
PIC18F46J50 Family		**Standard Operating Conditions (unless otherwise stated)** Operating temperature -40°C ≤ TA ≤ +85°C for industrial					
Param No.	**Device**	**Typ**	**Max**	**Units**	**Conditions**		
	Module Differential Currents (ΔIWDT, ΔIHLVD, ΔIOSCB, ΔIAD, ΔIUSB)						
D026 (ΔIAD)	**A/D Converter**	3.0	10	µA	-40°C	VDD = 2.5V, VDDCORE = 2.5V	PIC18LFXXJ50 A/D on, not converting
		3.0	10	µA	+25°C		
		3.0	10	µA	+85°C		
		3.0	10	µA	-40°C	VDD = 2.15V, VDDCORE = 10 µF Capacitor	PIC18FXXJ50 A/D on, not converting
		3.0	10	µA	+25°C		
		3.0	10	µA	+85°C		
		3.2	11	µA	-40°C	VDD = 3.3V, VDDCORE = 10 µF Capacitor	
		3.2	11	µA	+25°C		
		3.2	11	µA	+85°C		
D027 (ΔIUSB)	**USB Module**	1.6	3.2	mA	-40°C	VDD and VUSB = 3.3V, VDDCORE = 10 µF Capacitor	PIC18FXXJ50 USB enabled, no cable connected.(4) Traffic makes a difference, see **Section 22.6.4 "USB Transceiver Current Consumption"**
		1.6	3.2	mA	+25°C		
		1.5	3.2	mA	+85°C		

Note 1: The power-down current in Sleep mode does not depend on the oscillator type. Power-down current is measured with the part in Sleep mode, with all I/O pins in a high-impedance state and tied to VDD or VSS, and all features that add delta current are disabled (such as WDT, Timer1 oscillator, BOR, etc.).

2: The supply current is mainly a function of operating voltage, frequency and mode. Other factors, such as I/O pin loading and switching rate, oscillator type and circuit, internal code execution pattern and temperature, also have an impact on the current consumption. All features that add delta current are disabled (USB module, WDT, etc.). The test conditions for all IDD measurements in active operation mode are:
OSC1 = external square wave, from rail-to-rail; all I/O pins tri-stated, pulled to VDD/VSS;
MCLR = VDD; WDT disabled unless otherwise specified.

3: Low-power Timer1 with standard, low-cost 32 kHz crystals has an operating temperature range of -10°C to +70°C. Extended temperature crystals are available at a much higher cost.

4: This is the module differential current when the USB module is enabled and clocked at 48 MHz, but with no USB cable attached. When the USB cable is attached, or data is being transmitted, the current consumption may be much higher (see **Section 22.6.4 "USB Transceiver Current Consumption"**). During USB Suspend mode (USBEN = 1, SUSPND = 1, bus in Idle state), the USB module current will be dominated by the D+ or D- pull-up resistor. The integrated pull-up resistors use "resistor switching" according to the `resistor_ecn` supplement to the *"USB 2.0 Specifications"*, and therefore, may be as low as 900Ω during Idle conditions.

30.3 DC Characteristics:PIC18F46J50 Family (Industrial)

DC CHARACTERISTICS			Standard Operating Conditions (unless otherwise stated) Operating temperature -40°C ≤ TA ≤ +85°C for industrial			
Param No.	**Symbol**	**Characteristic**	**Min**	**Max**	**Units**	**Conditions**
	VIL	**Input Low Voltage**				
		All I/O ports:				
D030		with TTL Buffer(4)	VSS	0.15 VDD	V	VDD ≤ 3.3V
D030A		with TTL Buffer(4)	VSS	0.8	V	3.3V < VDD < 3.6V
D031		with Schmitt Trigger Buffer	VSS	0.2 VDD	V	
D031A		SDAx/SCLx	VSS	0.3 VDD	V	I2C™ enabled
D031B		SDAx/SCLx	VSS	0.8	V	SMBus enabled
D032		MCLR	VSS	0.2 VDD	V	
D033		OSC1	VSS	0.3 VDD	V	HS, HSPLL modes
D033A		OSC1	VSS	0.2 VDD	V	EC, ECPLL modes
D034		T1OSI	VSS	0.3	V	T1OSCEN = 1
	VIH	**Input High Voltage**				
		I/O Ports without 5.5V Tolerance:				
D040		with TTL Buffer(4)	0.25 VDD + 0.8V	VDD	V	VDD < 3.3V
D040A		with TTL Buffer(4)	2.0	VDD	V	3.3V < VDD < 3.6V
D041		with Schmitt Trigger Buffer	0.8 VDD	VDD	V	
		I/O Ports with 5.5V Tolerance:(5)				
Dxxx		with TTL Buffer	0.25 VDD + 0.8V	5.5	V	VDD < 3.3V
DxxxA			2.0	5.5	V	3.3V ≤ VDD ≤ 3.6V
Dxxx		with Schmitt Trigger Buffer	0.8 VDD	5.5	V	
D041A		SDAx/SCLx	0.7 VDD	5.5	V	I2C™ enabled
D041B		SDAx/SCLx	2.1	5.5	V	SMBus enabled, VDD ≥ 3V
D042		MCLR	0.8 VDD	5.5	V	
D043		OSC1	0.7 VDD	VDD	V	HS, HSPLL modes
D043A		OSC1	0.8 VDD	VDD	V	EC, ECPLL modes
D044		T1OSI	1.6	VDD	V	T1OSCEN = 1
	IIL	**Input Leakage Current(1,2)**				
D060		I/O Ports	—	±0.2	µA	VSS ≤ VPIN ≤ VDD, Pin at high-impedance
D061		MCLR	—	±0.2	µA	Vss ≤ VPIN ≤ VDD
D063		OSC1	—	±0.2	µA	Vss ≤ VPIN ≤ VDD
	IPU	**Weak Pull-up Current**				
D070	IPURB	PORTB, PORTD(3) and PORTE(3) Weak Pull-up Current	80	400	µA	VDD = 3.3V, VPIN = VSS

Note 1: The leakage current on the MCLR pin is strongly dependent on the applied voltage level. The specified levels represent normal operating conditions. Higher leakage current may be measured at different input voltages.

2: Negative current is defined as current sourced by the pin.

3: Only available on 44-pin devices.

4: When used as general purpose inputs, the RC4 and RC5 thresholds are referenced to VUSB instead of VDD.

5: Refer to Table 10-2 for pin tolerance levels.

© 2011 Microchip Technology Inc.

30.3 DC Characteristics:PIC18F46J50 Family (Industrial) (Continued)

DC CHARACTERISTICS			Standard Operating Conditions (unless otherwise stated) Operating temperature -40°C ≤ TA ≤ +85°C for industrial			
Param No.	**Symbol**	**Characteristic**	**Min**	**Max**	**Units**	**Conditions**
	VOL	**Output Low Voltage**				
D080		I/O Ports:				
		PORTA (except RA6), PORTD, PORTE	—	0.4	V	IOL = 2 mA, VDD = 3.3V, -40°C to +85°C
		PORTB, PORTC, RA6	—	0.4	V	IOL = 8.5 mA, VDD = 3.3V, -40°C to +85°C
	VOH	**Output High Voltage**				
D090		I/O Ports:			V	
		PORTA (except RA6), PORTD, PORTE	2.4	—	V	IOH = -2 mA, VDD = 3.3V, -40°C to +85°C
		PORTB, PORTC, RA6	2.4	—	V	IOH = -6 mA, VDD = 3.3V, -40°C to +85°C
		Capacitive Loading Specs on Output Pins				
D101	CIO	All I/O Pins and OSC2	—	50	pF	To meet the AC Timing Specifications
D102	CB	SCLx, SDAx	—	400	pF	I^2C™ Specification

Note 1: The leakage current on the $\overline{MCLR}$ pin is strongly dependent on the applied voltage level. The specified levels represent normal operating conditions. Higher leakage current may be measured at different input voltages.

2: Negative current is defined as current sourced by the pin.

3: Only available on 44-pin devices.

4: When used as general purpose inputs, the RC4 and RC5 thresholds are referenced to VUSB instead of VDD.

5: Refer to Table 10-2 for pin tolerance levels.

TABLE 30-1: MEMORY PROGRAMMING REQUIREMENTS

DC CHARACTERISTICS			Standard Operating Conditions (unless otherwise stated) Operating temperature -40°C ≤ TA ≤ +85°C for industrial				
Param No.	**Sym**	**Characteristic**	**Min**	**Typ†**	**Max**	**Units**	**Conditions**
		Program Flash Memory					
D130	EP	Cell Endurance	10K	—	—	E/W	-40°C to +85°C
D131	VPR	VDDcore for Read	VMIN	—	2.75	V	VMIN = Minimum operating voltage
D132B	VPEW	VDDCORE for Self-Timed Erase or Write	2.25	—	2.75	V	
D133A	TIW	Self-Timed Write Cycle Time	—	2.8	—	ms	64 bytes
D133B	TIE	Self-Timed Block Erase Cycle Time	—	33.0	—	ms	
D134	TRETD	Characteristic Retention	20	—	—	Year	Provided no other specifications are violated
D135	IDDP	Supply Current during Programming	—	3	—	mA	

† Data in "Typ" column is at 3.3V, 25°C unless otherwise stated.

TABLE 30-2: COMPARATOR SPECIFICATIONS

Operating Conditions: 3.0V < VDD < 3.6V, -40°C < TA < +85°C (unless otherwise stated)							
Param No.	**Sym**	**Characteristics**	**Min**	**Typ**	**Max**	**Units**	**Comments**
D300	VIOFF	Input Offset Voltage	—	+/-5	+/-25	mV	
D301	VICM	Input Common Mode Voltage	0	—	VDD	V	
	VIRV	Internal Reference Voltage	0.57	0.60	0.63	V	
D302	CMRR	Common Mode Rejection Ratio	55	—	—	dB	
D303	TRESP	Response Time(1)	—	150	400	ns	
D304	TMC2OV	Comparator Mode Change to Output Valid	—	—	10	μs	

Note 1: Response time measured with one comparator input at VDD/2, while the other input transitions from VSS to VDD.

© 2011 Microchip Technology Inc.

TABLE 30-3: VOLTAGE REFERENCE SPECIFICATIONS

Operating Conditions: 3.0V < VDD < 3.6V, -40°C < TA < +85°C (unless otherwise stated)							
Param No.	**Sym**	**Characteristics**	**Min**	**Typ**	**Max**	**Units**	**Comments**
D310	VRES	Resolution	VDD/24	—	VDD/32	LSb	
D311	VRAA	Absolute Accuracy	—	—	1/2	LSb	
D312	VRUR	Unit Resistor Value (R)	—	2k	—	Ω	
D313	TSET	Settling Time(1)	—	—	10	μs	

Note 1: Settling time measured while CVRR = 1 and CVR<3:0> bits transition from '0000' to '1111'.

TABLE 30-4: INTERNAL VOLTAGE REGULATOR SPECIFICATIONS

Operating Conditions: -40°C < TA < +85°C (unless otherwise stated)							
Param No.	**Sym**	**Characteristics**	**Min**	**Typ**	**Max**	**Units**	**Comments**
	VRGOUT	Regulator Output Voltage	2.35	2.5	2.7	V	Regulator enabled, VDD = 3.0V
	CEFC	External Filter Capacitor Value(1)	5.4	10	18	μF	ESR < 3Ω recommended ESR < 5Ω required

Note 1: CEFC applies for PIC18**F** devices in the family. For PIC18**LF** devices in the family, there is no specific minimum or maximum capacitance for VDDCORE, although proper supply rail bypassing should still be used.

TABLE 30-5: ULPWU SPECIFICATIONS

DC CHARACTERISTICS			**Standard Operating Conditions (unless otherwise stated)** Operating temperature -40°C ≤ TA ≤ +85°C for industrial				
Param No.	**Sym**	**Characteristic**	**Min**	**Typ†**	**Max**	**Units**	**Conditions**
D100	IULP	**Ultra Low-Power Wake-up Current**	—	60	—	nA	Net of I/O leakage and current sink at 1.6V on pin, VDD = 3.3V See Application Note *AN879,* "*Using the Microchip Ultra Low-Power Wake-up Module*" (DS00879)

† Data in "Typ" column is at 3.3V, 25°C unless otherwise stated.

TABLE 30-6: CTMU CURRENT SOURCE SPECIFICATIONS

DC CHARACTERISTICS			**Standard Operating Conditions: 2.0V to 3.6V (unless otherwise stated)** Operating temperature -40°C ≤ TA ≤ +85°C for Industrial				
Param No.	**Sym**	**Characteristic**	**Min**	**Typ(1)**	**Max**	**Units**	**Conditions**
	IOUT1	CTMU Current Source, Base Range	—	550	—	nA	CTMUICON<1:0> = 01
	IOUT2	CTMU Current Source, 10x Range	—	5.5	—	μA	CTMUICON<1:0> = 10
	IOUT3	CTMU Current Source, 100x Range	—	55	—	μA	CTMUICON<1:0> = 11

Note 1: Nominal value at center point of current trim range (CTMUICON<7:2> = 000000).

TABLE 30-7: USB MODULE SPECIFICATIONS

Operating Conditions: -40°C < TA < +85°C (unless otherwise stated)							
Param No.	**Sym**	**Characteristics**	**Min**	**Typ**	**Max**	**Units**	**Comments**
D313	VUSB	USB Voltage	3.0	—	3.6	V	Voltage on VUSB pin must be in this range for proper USB operation
D314	IIL	Input Leakage on D+ or D-	—	—	+/-0.5	μA	VSS ≤ VPIN ≤ VUSB
D315	VILUSB	Input Low Voltage for USB Buffer	—	—	0.8	V	For VUSB range
D316	VIHUSB	Input High Voltage for USB Buffer	2.0	—	—	V	For VUSB range
D318	VDIFS	Differential Input Sensitivity	—	—	0.2	V	The difference between D+ and D- must exceed this value while VCM is met
D319	VCM	Differential Common Mode Range	0.8	—	2.5	V	
D320	ZOUT	Driver Output Impedance(1)	28	—	44	Ω	
D321	VOL	Voltage Output Low	0.0	—	0.3	V	1.5 kΩ load connected to 3.6V
D322	VOH	Voltage Output High	2.8	—	3.6	V	1.5 kΩ load connected to ground

Note 1: The D+ and D- signal lines have built-in impedance matching resistors. No external resistors, capacitors or magnetic components are necessary on the D+/D- signal paths between the PIC18F46J50 family device and a USB cable.

© 2011 Microchip Technology Inc.

FIGURE 30-3: HIGH/LOW-VOLTAGE DETECT CHARACTERISTICS

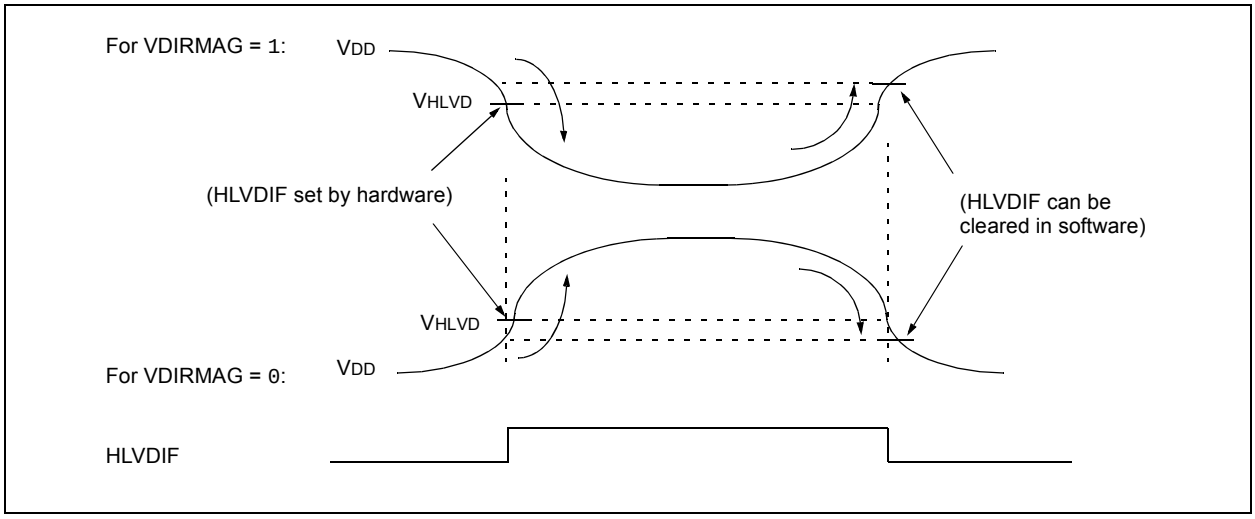

TABLE 30-8: HIGH/LOW-VOLTAGE DETECT CHARACTERISTICS

Standard Operating Conditions (unless otherwise stated) Operating temperature -40°C ≤ TA ≤ +85°C for industrial								
Param No.	**Symbol**	**Characteristic**		**Min**	**Typ**	**Max**	**Units**	**Conditions**
D420		HLVD Voltage on VDD Transition High-to-Low	HLVDL<3:0> = 1000	2.33	2.45	2.57	V	
			HLVDL<3:0> = 1001	2.47	2.60	2.73	V	
			HLVDL<3:0> = 1010	2.66	2.80	2.94	V	
			HLVDL<3:0> = 1011	2.76	2.90	3.05	V	
			HLVDL<3:0> = 1100	2.85	3.00	3.15	V	
			HLVDL<3:0> = 1101	2.97	3.13	3.29	V	
			HLVDL<3:0> = 1110	3.23	3.40	3.57	V	
D421	TIRVST	Time for Internal Reference Voltage to become Stable		—	20	—	µs	
D422	TLVD	High/Low-Voltage Detect Pulse Width		200	—	—	µs	

30.4 AC (Timing) Characteristics

30.4.1 TIMING PARAMETER SYMBOLOGY

The timing parameter symbols have been created following one of the following formats:

1. TppS2ppS
2. TppS
3. TCC:ST (I^2C specifications only)
4. Ts (I^2C specifications only)

T			
F	Frequency	T	Time

Lowercase letters (pp) and their meanings:

pp			
cc	CCP1	osc	OSC1
ck	CLKO	rd	$\overline{RD}$
cs	$\overline{CS}$	rw	$\overline{RD}$ or $\overline{WR}$
di	SDI	sc	SCK
do	SDO	ss	$\overline{SS}$
dt	Data in	t0	T0CKI
io	I/O port	t1	T13CKI
mc	$\overline{MCLR}$	wr	$\overline{WR}$

Uppercase letters and their meanings:

S			
F	Fall	P	Period
H	High	R	Rise
I	Invalid (High-impedance)	V	Valid
L	Low	Z	High-impedance
I^2C only			
AA	output access	High	High
BUF	Bus free	Low	Low

TCC:ST (I^2C specifications only)

CC			
HD	Hold	SU	Setup
ST			
DAT	DATA input hold	STO	Stop condition
STA	Start condition		

© 2011 Microchip Technology Inc.

30.4.2 TIMING CONDITIONS

The temperature and voltages specified in Table 30-9 apply to all timing specifications unless otherwise noted. Figure 30-4 specifies the load conditions for the timing specifications.

TABLE 30-9: TEMPERATURE AND VOLTAGE SPECIFICATIONS – AC

AC CHARACTERISTICS	**Standard Operating Conditions (unless otherwise stated)** Operating temperature -40°C ≤ TA ≤ +85°C for industrial Operating voltage VDD range as described in **Section 30.1** and **Section 30.3**.

FIGURE 30-4: LOAD CONDITIONS FOR DEVICE TIMING SPECIFICATIONS

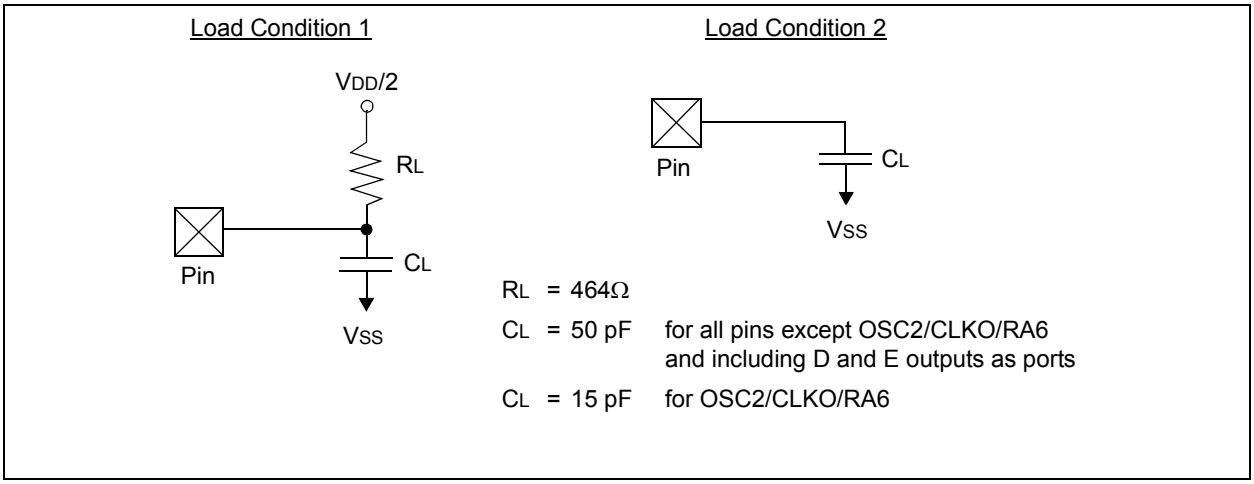

30.4.3 TIMING DIAGRAMS AND SPECIFICATIONS

FIGURE 30-5: EXTERNAL CLOCK TIMING

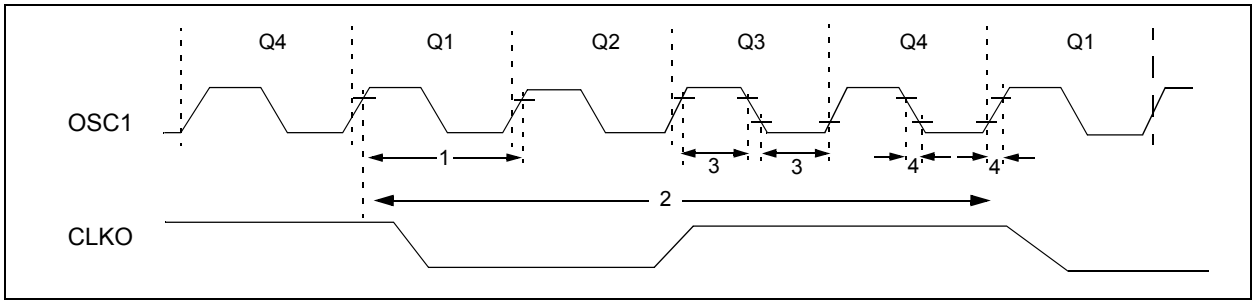

TABLE 30-10: EXTERNAL CLOCK TIMING REQUIREMENTS

Param. No.	Symbol	Characteristic	Min	Max	Units	Conditions
1A	FOSC	External CLKI Frequency(1)	DC	48	MHz	EC Oscillator mode
			DC	48		ECPLL Oscillator mode(2)
		Oscillator Frequency(1)	4	16	MHz	HS Oscillator mode
			4	16(4)		HSPLL Oscillator mode(3)
1	TOSC	External CLKI Period(1)	20.8	—	ns	EC Oscillator mode
			20.8	—		ECPLL Oscillator mode(2)
		Oscillator Period(1)	62.5	250	ns	HS Oscillator mode
			62.5(4)	250		HSPLL Oscillator mode(3)
2	TCY	Instruction Cycle Time(1)	83.3	DC	ns	TCY = 4/FOSC, Industrial
3	TOSL, TOSH	External Clock in (OSC1) High or Low Time	10	—	ns	EC Oscillator mode
4	TOSR, TOSF	External Clock in (OSC1) Rise or Fall Time	—	7.5	ns	EC Oscillator mode

Note 1: The instruction cycle period (TCY) equals four times the input oscillator time base period for all configurations except PLL. All specified values are based on characterization data for that particular oscillator type under standard operating conditions, with the device executing code. Exceeding these specified limits may result in an unstable oscillator operation and/or higher than expected current consumption. All devices are tested to operate at “min.” values with an external clock applied to the OSC1/CLKI pin. When an external clock input is used, the “max.” cycle time limit is “DC” (no clock) for all devices.

2: In order to use the PLL, the external clock frequency must be either 4, 8, 12, 16, 20, 24, 40 or 48 MHz.

3: In order to use the PLL, the crystal/resonator must produce a frequency of either 4, 8, 12 or 16 MHz.

4: This is the maximum crystal/resonator driver frequency. The internal FOSC frequency when running from the PLL can be up to 48 MHz.

© 2011 Microchip Technology Inc.

TABLE 30-11: PLL CLOCK TIMING SPECIFICATIONS (V_{DDCORE} = 2.35V TO 2.75V)

Param No.	Sym	Characteristic	Min	Typ	Max	Units	Conditions
F10	F_{PLLIN}	PLL Input Frequency Range	—	4(1)	—	MHz	
F11	F_{PLLO}	PLL Output Frequency (24x F_{PLLIN})	—	96	—	MHz	
F12	t_{rc}	PLL Start-up Time (lock time)	—	—	2	ms	

Note 1: PLL is designed for 4 MHz input frequency, but can accept 4 MHz to 48 MHz inputs using the PLL input prescaler.

TABLE 30-12: INTERNAL RC ACCURACY (INTOSC AND INTRC SOURCES)

Param No.	Device	Min	Typ	Max	Units	Conditions	
	INTOSC Accuracy @ Freq = 8 MHz, 4 MHz, 2 MHz, 1 MHz, 500 kHz, 250 kHz, 125 kHz, 31 kHz(1)						
	All Devices	-1	+/-0.15	+1	%	0°C to +85°C	V_{DD} = 2.4V-3.6V V_{DDCORE} = 2.3V-2.7V
		-1	+/-0.25	+1	%	-40°C to +85°C	V_{DD} = 2.0V-3.6V V_{DDCORE} = 2.0V-2.7V
	INTRC Accuracy @ Freq = 31 kHz(1)						
	All Devices	20.3	—	42.2	kHz	-40°C to +85°C	V_{DD} = 2.0V-3.6V V_{DDCORE} = 2.0V-2.7V

Note 1: The accuracy specification of the 31 kHz clock is determined by which source is providing it at a given time. When INTSRC (OSCTUNE<7>) is '1', use the INTOSC accuracy specification. When INTSRC is '0', use the INTRC accuracy specification.

FIGURE 30-6: CLKO AND I/O TIMING

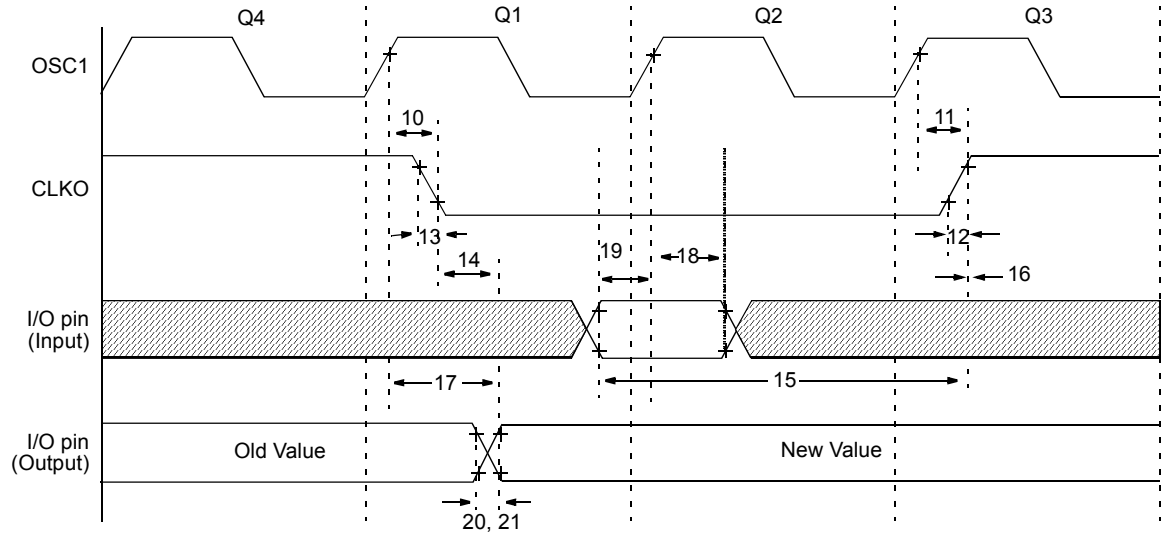

Note: Refer to Figure 30-4 for load conditions.

TABLE 30-13: CLKO AND I/O TIMING REQUIREMENTS

Param No.	Symbol	Characteristic	Min	Typ	Max	Units	Conditions
10	TOSH2CKL	OSC1 ↑ to CLKO ↓	—	75	200	ns	**(Note 1)**
11	TOSH2CKH	OSC1 ↑ to CLKO ↑	—	75	200	ns	**(Note 1)**
12	TCKR	CLKO Rise Time	—	15	30	ns	**(Note 1)**
13	TCKF	CLKO Fall Time	—	15	30	ns	**(Note 1)**
14	TCKL2IOV	CLKO ↓ to Port Out Valid	—	—	0.5 TCY + 20	ns	
15	TIOV2CKH	Port In Valid before CLKO ↑	0.25 TCY + 25	—	—	ns	
16	TCKH2IOI	Port In Hold after CLKO ↑	0	—	—	ns	
17	TOSH2IOV	OSC1 ↑ (Q1 cycle) to Port Out Valid	—	50	150	ns	
18	TOSH2IOI	OSC1 ↑ (Q2 cycle) to Port Input Invalid (I/O in hold time)	100	—	—	ns	
19	TIOV2OSH	Port Input Valid to OSC1 ↑ (I/O in setup time)	0	—	—	ns	
20	TIOR	Port Output Rise Time	—	—	6	ns	
21	TIOF	Port Output Fall Time	—	—	5	ns	
22†	TINP	INTx pin High or Low Time	TCY	—	—	ns	
23†	TRBP	RB<7:4> Change INTx High or Low Time	TCY	—	—	ns	

† These parameters are asynchronous events not related to any internal clock edges.

Note 1: Measurements are taken in EC mode, where CLKO output is 4 x TOSC.

© 2011 Microchip Technology Inc.

FIGURE 30-7: RESET, WATCHDOG TIMER, OSCILLATOR START-UP TIMER AND POWER-UP TIMER TIMING

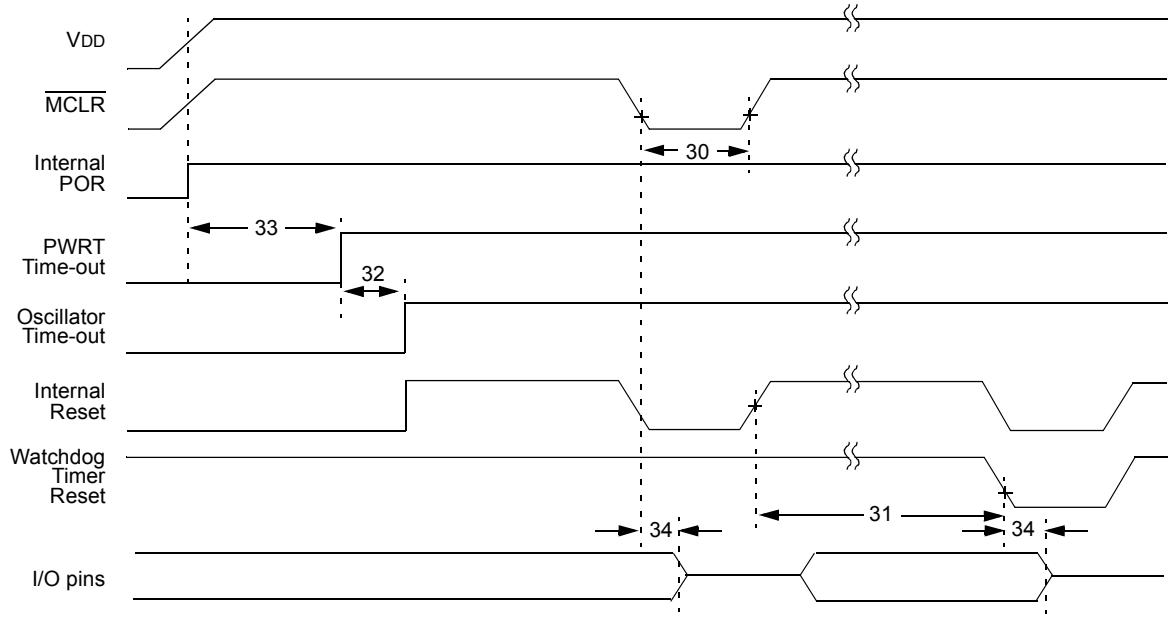

Note: Refer to Figure 30-4 for load conditions.

TABLE 30-14: RESET, WATCHDOG TIMER, OSCILLATOR START-UP TIMER, POWER-UP TIMER AND BROWN-OUT RESET REQUIREMENTS

Param. No.	Symbol	Characteristic	Min	Typ	Max	Units	Conditions
30	TMCL	$\overline{\text{MCLR}}$ Pulse Width (low)	2	—	—	µs	**(Note 3)**
31	TWDT	Watchdog Timer Time-out Period (no postscaler)	2.67	4.0	5.53	ms	
32	TOST	Oscillator Start-up Timer Period	1024 TOSC	—	1024 TOSC	—	TOSC = OSC1 period
33	TPWRT	Power-up Timer Period	—	1.0	—	ms	
34	TIOZ	I/O High-Impedance from $\overline{\text{MCLR}}$ Low or Watchdog Timer Reset	—	—	3 TCY + 2	µs	**(Note 1)**
36	TIRVST	Time for Internal Reference Voltage to become Stable	—	20	—	µs	
37	TLVD	High/Low-Voltage Detect Pulse Width	—	200	—	µs	
38	TCSD	CPU Start-up Time	—	200	—	µs	**(Note 2)**

Note 1: The maximum TIOZ is the lesser of (3 TCY + 2 µs) or 700 µs.

2: $\overline{\text{MCLR}}$ rising edge to code execution, assuming TPWRT (and TOST, if applicable) has already expired.

3: The MCLR input has an internal noise filter to avoid nuisance Resets. When deliberately trying to reset the microcontroller, $\overline{\text{MCLR}}$ must be held low for at least this amount of time to ensure a Reset sequence is triggered.

TABLE 30-15: LOW-POWER WAKE-UP TIME

Param. No.	Symbol	Characteristic	Min	Typ	Max	Units	Conditions
W1	WDS	Deep Sleep	—	1.5 ms	—	ms	REGSLP = 1
W2	WSLEEP	Sleep	—	300 µs	—	µs	REGSLP = 1, PLLEN = 0, FOSC = 8 MHz INTOSC
W3	WDOZE1	Sleep	—	12 µs	—	µs	REGSLP = 0, PLLEN = 0, FOSC = 8 MHz INTOSC
W4	WDOZE2	Sleep	—	1.1 µs	—	µs	REGSLP = 0, PLLEN = 0, FOSC = 8 MHz EC
W5	WDOZE3	Sleep	—	250 ns	—	ns	REGSLP = 0, PLLEN = 0, FOSC = 48 MHz EC
W6	WIDLE	Idle	—	300 ns	—	ns	FOSC = 48 MHz EC

© 2011 Microchip Technology Inc.

FIGURE 30-8: TIMER0 AND TIMER1 EXTERNAL CLOCK TIMINGS

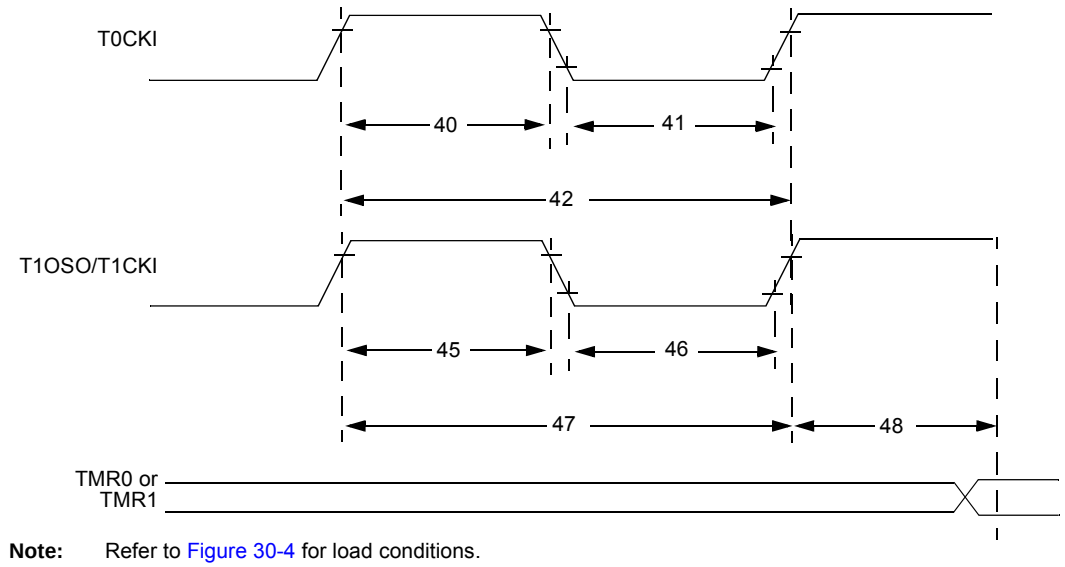

Note: Refer to Figure 30-4 for load conditions.

TABLE 30-16: TIMER0 AND TIMER1 EXTERNAL CLOCK REQUIREMENTS

Param No.	Symbol	Characteristic		Min	Max	Units	Conditions
40	TT0H	T0CKI High Pulse Width	No prescaler	0.5 TCY + 20	—	ns	
			With prescaler	10	—	ns	
41	TT0L	T0CKI Low Pulse Width	No prescaler	0.5 TCY + 20	—	ns	
			With prescaler	10	—	ns	
42	TT0P	T0CKI Period	No prescaler	TCY + 10	—	ns	
			With prescaler	Greater of: 20 ns or (TCY + 40)/N	—	ns	N = prescale value (1, 2, 4,..., 256)
45	TT1H	T1CKI/T3CKI High Time	Synchronous, no prescaler	0.5 TCY + 20	—	ns	
			Synchronous, with prescaler	10	—	ns	
			Asynchronous	30	—	ns	
46	TT1L	T1CKI/T3CKI Low Time	Synchronous, no prescaler	0.5 TCY + 5	—	ns	
			Synchronous, with prescaler	10	—	ns	
			Asynchronous	30	—	ns	
47	TT1P	T1CKI/T3CKI Input Period	Synchronous	Greater of: 20 ns or (TCY + 40)/N	—	ns	N = prescale value (1, 2, 4, 8)
			Asynchronous	83	—	ns	
	FT1	T1CKI Input Frequency Range(1)		DC	12	MHz	
48	TCKE2TMRI	Delay from External T1CKI Clock Edge to Timer Increment		2 TOSC	7 TOSC	—	

Note 1: The Timer1 oscillator is designed to drive 32.768 kHz crystals. When T1CKI is used as a digital input, frequencies up to 12 MHz are supported.

FIGURE 30-9: ENHANCED CAPTURE/COMPARE/PWM TIMINGS

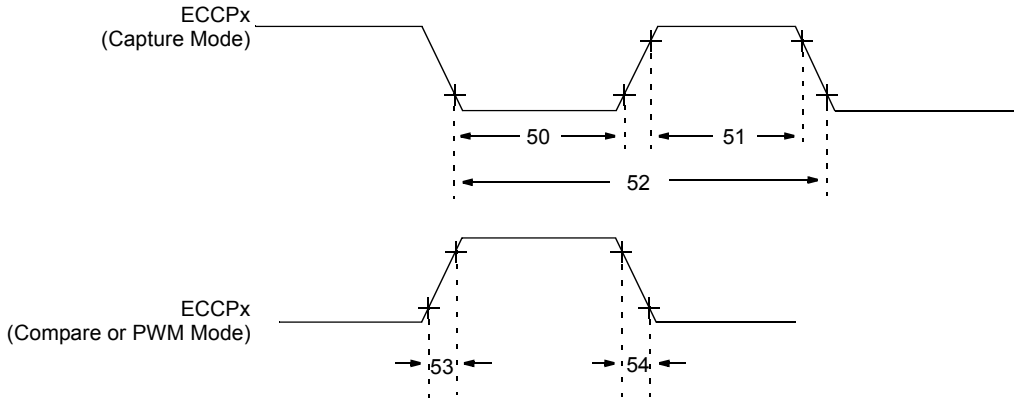

Note: Refer to Figure 30-4 for load conditions.

TABLE 30-17: ENHANCED CAPTURE/COMPARE/PWM REQUIREMENTS

Param No.	Symbol	Characteristic		Min	Max	Units	Conditions
50	TccL	ECCPx Input Low Time	No prescaler	0.5 TCY + 20	—	ns	
			With prescaler	10	—	ns	
51	TccH	ECCPx Input High Time	No prescaler	0.5 TCY + 20	—	ns	
			With prescaler	10	—	ns	
52	TccP	ECCPx Input Period		$\frac{3\ T_{CY} + 40}{N}$	—	ns	N = prescale value (1, 4 or 16)
53	TccR	ECCPx Output Rise Time		—	25	ns	
54	TccF	ECCPx Output Fall Time		—	25	ns	

© 2011 Microchip Technology Inc.

FIGURE 30-10: PARALLEL MASTER PORT READ TIMING DIAGRAM

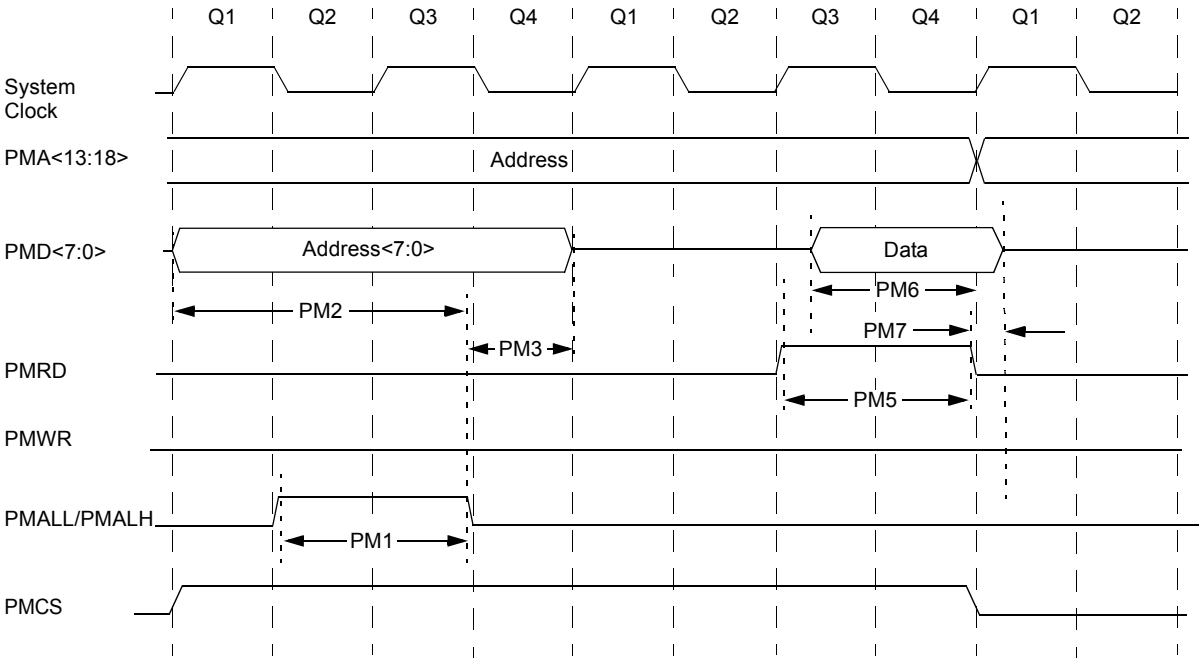

Operating Conditions: 2.0V < VDD < 3.6V, -40°C < TA < +85°C unless otherwise stated.

TABLE 30-18: PARALLEL MASTER PORT READ TIMING REQUIREMENTS

Param. No	Symbol	Characteristics	Min	Typ	Max	Units
PM1		PMALL/PMALH Pulse Width	—	0.5 TCY	—	ns
PM2		Address Out Valid to PMALL/PMALH Invalid (address setup time)	—	0.75 TCY	—	ns
PM3		PMALL/PMALH Invalid to Address Out Invalid (address hold time)	—	0.25 TCY	—	ns
PM5		PMRD Pulse Width	—	0.5 TCY	—	ns
PM6		Data in Valid to PMRD or PMENB Invalid (data setup time)	—	—	—	ns
PM7		PMRD or PMENB Inactive to Data In Invalid (data hold time)	—	—	5	ns

FIGURE 30-11: PARALLEL MASTER PORT WRITE TIMING DIAGRAM

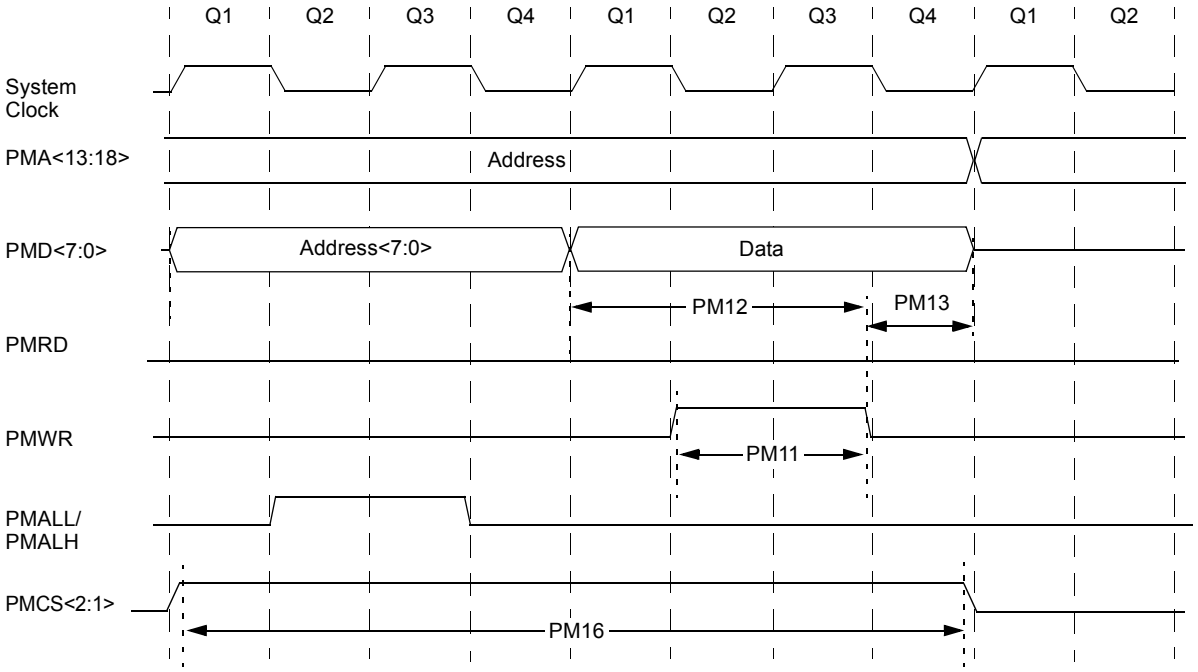

Note: Operating Conditions: 2.0V < V_{DD} < 3.6V, -40°C < T_A < +85°C unless otherwise stated.

TABLE 30-19: PARALLEL MASTER PORT WRITE TIMING REQUIREMENTS

Param. No	Symbol	Characteristics	Min	Typ	Max	Units
PM11		PMWR Pulse Width	—	0.5 T_{CY}	—	ns
PM12		Data Out Valid before PMWR or PMENB goes Inactive (data setup time)	—	0.75 T_{CY}	—	ns
PM13		PMWR or PMEMB Invalid to Data Out Invalid (data hold time)	—	0.25 T_{CY}	—	ns
PM16		PMCS Pulse Width	T_{CY} – 5	—	—	ns

© 2011 Microchip Technology Inc.

FIGURE 30-12: PARALLEL SLAVE PORT TIMING

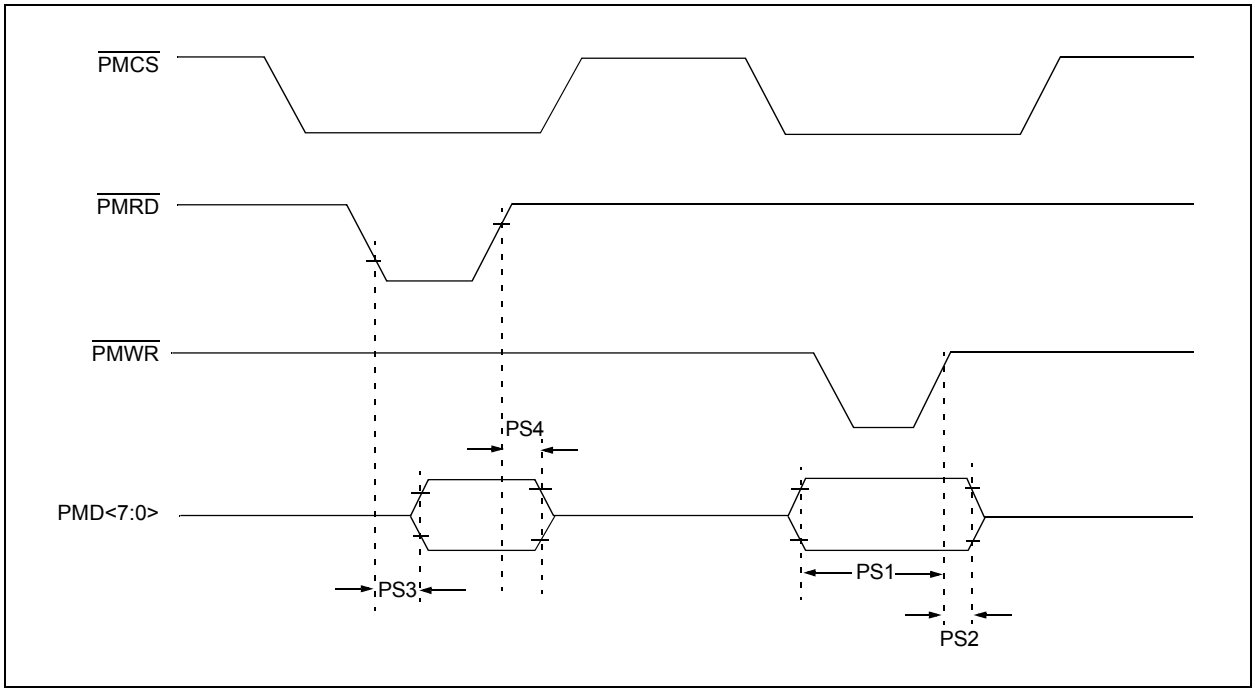

TABLE 30-20: PARALLEL SLAVE PORT REQUIREMENTS

AC CHARACTERISTICS			Standard Operating Conditions: 2.0V to 3.6V (unless otherwise stated) Operating temperature -40°C ≤ TA ≤ +85°C for Industrial				
Param. No.	**Symbol**	**Characteristic**	**Min**	**Typ**	**Max**	**Units**	**Conditions**
PS1	TdtV2wrH	Data In Valid before $\overline{\text{PMWR}}$ or $\overline{\text{PMCS}}$ Inactive (setup time)	20	—	—	ns	
PS2	TwrH2dtI	$\overline{\text{PMWR}}$ or $\overline{\text{PMCS}}$ Inactive to Data–In Invalid (hold time)	20	—	—	ns	
PS3	TrdL2dtV	$\overline{\text{PMRD}}$ and $\overline{\text{PMCS}}$ Active to Data–Out Valid	—	—	80	ns	
PS4	TrdH2dtI	$\overline{\text{PMRD}}$ Inactive or $\overline{\text{PMCS}}$ Inactive to Data–Out Invalid	10	—	30	ns	

FIGURE 30-13: EXAMPLE SPI MASTER MODE TIMING (CKE = 0)

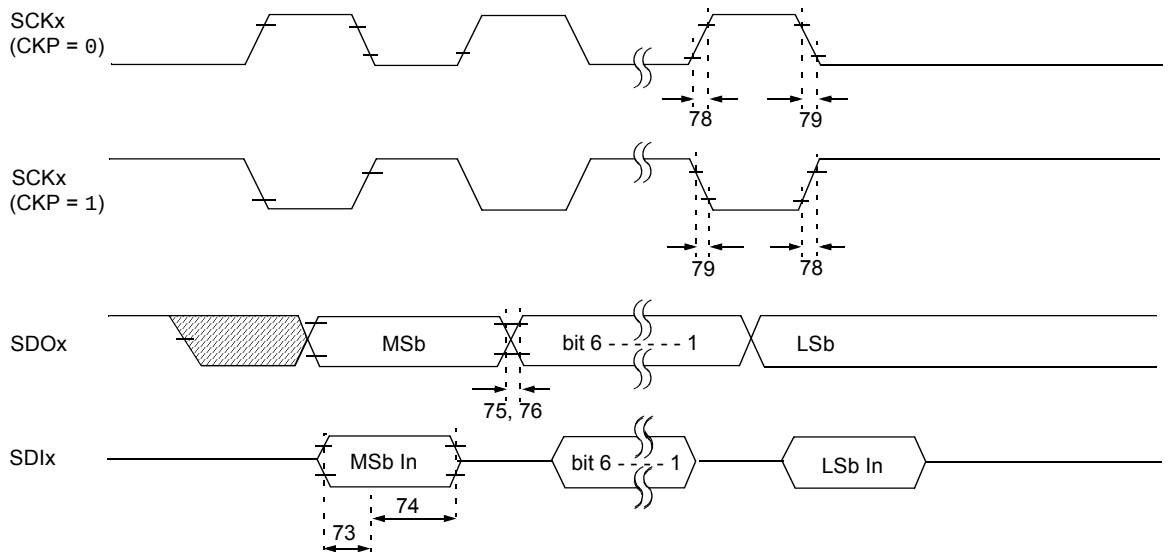

Note: Refer to Figure 30-4 for load conditions.

TABLE 30-21: EXAMPLE SPI MODE REQUIREMENTS (MASTER MODE, CKE = 0)

Param No.	Symbol	Characteristic	Min	Max	Units	Conditions
73	TDIV2SCH, TDIV2SCL	Setup Time of SDIx Data Input to SCKx Edge	35	—	ns	VDD = 3.3V, VDDCORE = 2.5V
			100	—	ns	VDD = 2.15V, VDDCORE = 2.15V
74	TSCH2DIL, TSCL2DIL	Hold Time of SDIx Data Input to SCKx Edge	30	—	ns	VDD = 3.3V, VDDCORE = 2.5V
			83	—	ns	VDD = 2.15V
75	TDOR	SDOx Data Output Rise Time	—	25	ns	PORTB or PORTC
76	TDOF	SDOx Data Output Fall Time	—	25	ns	PORTB or PORTC
78	TSCR	SCKx Output Rise Time (Master mode)	—	25	ns	PORTB or PORTC
79	TSCF	SCKx Output Fall Time (Master mode)	—	25	ns	PORTB or PORTC

© 2011 Microchip Technology Inc.

FIGURE 30-14: EXAMPLE SPI MASTER MODE TIMING (CKE = 1)

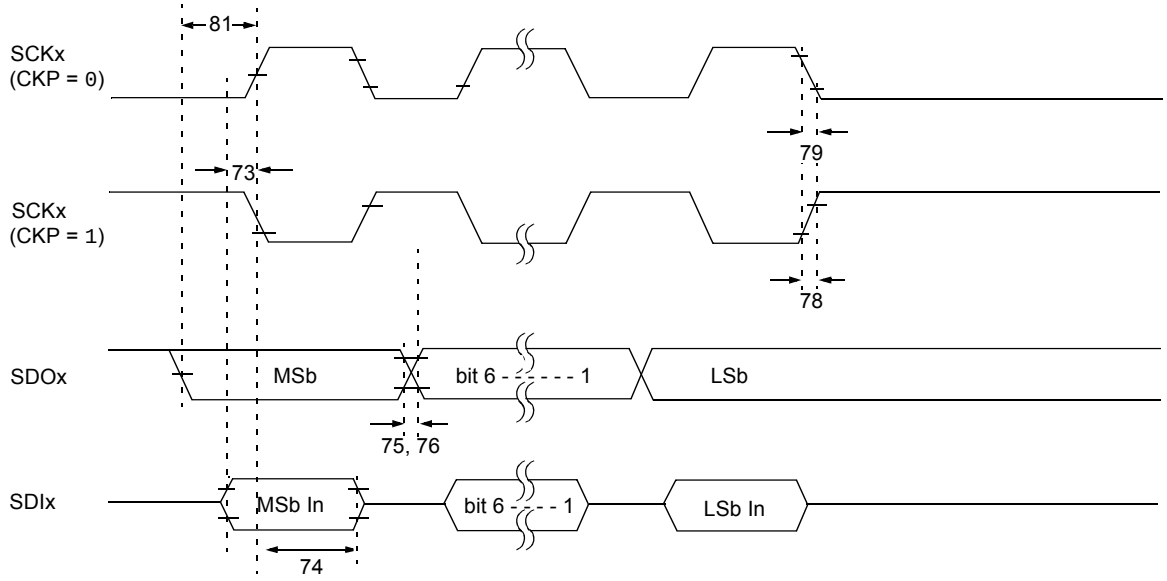

Note: Refer to Figure 30-4 for load conditions.

TABLE 30-22: EXAMPLE SPI MODE REQUIREMENTS (MASTER MODE, CKE = 1)

Param. No.	Symbol	Characteristic	Min	Max	Units	Conditions
73	TDIV2SCH, TDIV2SCL	Setup Time of SDIx Data Input to SCKx Edge	35	—	ns	VDD = 3.3V, VDDCORE = 2.5V
			100	—	ns	VDD = 2.15V, VDDCORE = 2.15V
74	TSCH2DIL, TSCL2DIL	Hold Time of SDIx Data Input to SCKx Edge	30	—	ns	VDD = 3.3V, VDDCORE = 2.5V
			83	—	ns	VDD = 2.15V
75	TDOR	SDOx Data Output Rise Time	—	25	ns	PORTB or PORTC
76	TDOF	SDOx Data Output Fall Time	—	25	ns	PORTB or PORTC
78	TSCR	SCKx Output Rise Time (Master mode)	—	25	ns	PORTB or PORTC
79	TSCF	SCKx Output Fall Time (Master mode)	—	25	ns	PORTB or PORTC
81	TDOV2SCH, TDOV2SCL	SDOx Data Output Setup to SCKx Edge	TCY	—	ns	

FIGURE 30-15: EXAMPLE SPI SLAVE MODE TIMING (CKE = 0)

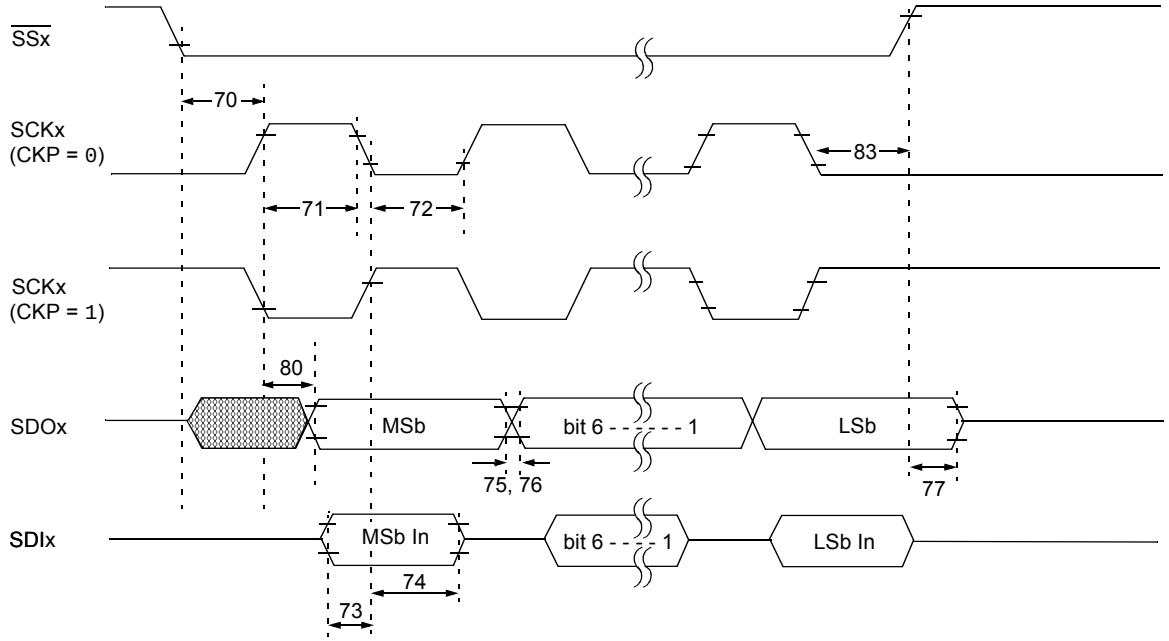

Note: Refer to Figure 30-4 for load conditions.

TABLE 30-23: EXAMPLE SPI MODE REQUIREMENTS (SLAVE MODE TIMING, CKE = 0)

Param No.	Symbol	Characteristic		Min	Max	Units	Conditions
70	TssL2scH, TssL2scL	$\overline{SSx}$ ↓ to SCKx ↓ or SCKx ↑ Input		3 Tcy	—	ns	
70A	TssL2WB	$\overline{SSx}$ ↓ to Write to SSPxBUF		3 Tcy	—	ns	
71	TscH	SCKx Input High Time (Slave mode)	Continuous	1.25 Tcy + 30	—	ns	
71A			Single byte	40	—	ns	**(Note 1)**
72	TscL	SCKx Input Low Time (Slave mode)	Continuous	1.25 Tcy + 30	—	ns	
72A			Single byte	40	—	ns	**(Note 1)**
73	TdiV2scH, TdiV2scL	Setup Time of SDIx Data Input to SCKx Edge		25	—	ns	
73A	Tb2b	Last Clock Edge of Byte 1 to the First Clock Edge of Byte 2		1.5 Tcy + 40	—	ns	**(Note 2)**
74	TscH2diL, TscL2diL	Hold Time of SDIx Data Input to SCKx Edge		35	—	ns	VDD = 3.3V, VDDCORE = 2.5V
				100	—	ns	VDD = 2.15V
75	TdoR	SDOx Data Output Rise Time		—	25	ns	PORTB or PORTC
76	TdoF	SDOx Data Output Fall Time		—	25	ns	PORTB or PORTC
77	TssH2doZ	$\overline{SSx}$ ↑ to SDOx Output High-Impedance		10	70	ns	
80	TscH2doV, TscL2doV	SDOx Data Output Valid after SCKx Edge		—	50	ns	VDD = 3.3V, VDDCORE = 2.5V
				—	100	ns	VDD = 2.15V
83	TscH2ssH, TscL2ssH	$\overline{SSx}$ ↑ after SCKx Edge		1.5 Tcy + 40	—	ns	

Note 1: Requires the use of Parameter #73A.
2: Only if Parameter #71A and #72A are used.

© 2011 Microchip Technology Inc.

FIGURE 30-16: EXAMPLE SPI SLAVE MODE TIMING (CKE = 1)

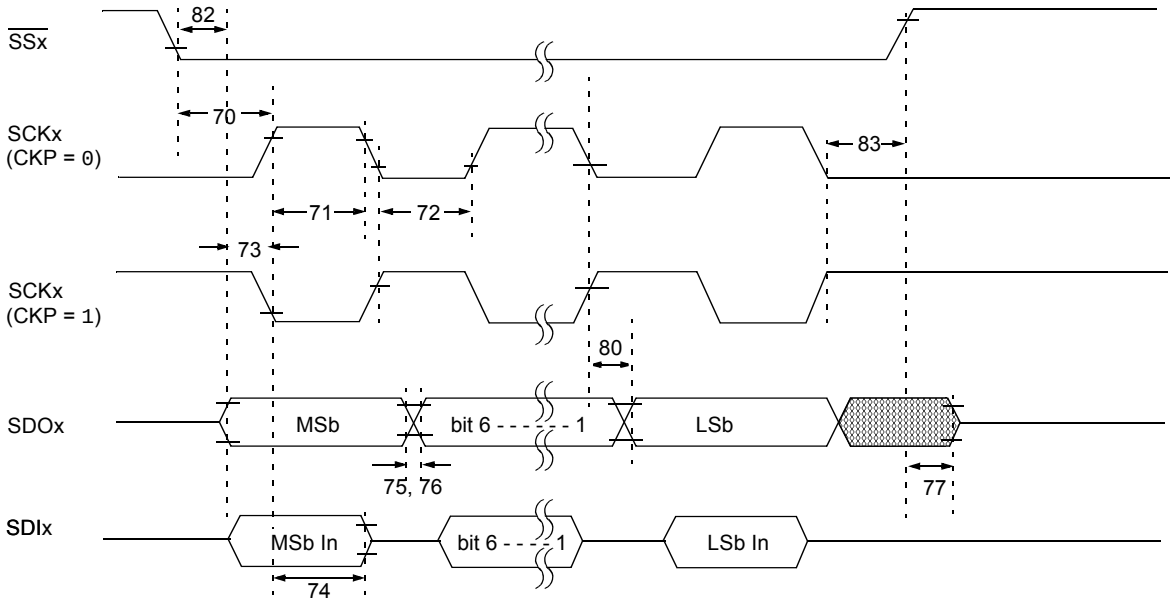

Note: Refer to Figure 30-4 for load conditions.

TABLE 30-24: EXAMPLE SPI SLAVE MODE REQUIREMENTS (CKE = 1)

Param No.	Symbol	Characteristic		Min	Max	Units	Conditions
70	TssL2scH, TssL2scL	$\overline{SSx}$ ↓ to SCKx ↓ or SCKx ↑ Input		3 Tcy	—	ns	
70A	TssL2WB	$\overline{SSx}$ ↓ to Write to SSPxBUF		3 Tcy	—	ns	
71	TscH	SCKx Input High Time (Slave mode)	Continuous	1.25 Tcy + 30	—	ns	
71A			Single byte	40	—	ns	**(Note 1)**
72	TscL	SCKx Input Low Time (Slave mode)	Continuous	1.25 Tcy + 30	—	ns	
72A			Single byte	40	—	ns	**(Note 1)**
73	TdiV2scH, TdiV2scL	Setup Time of SDIx Data Input to SCKx Edge		25	—	ns	
73A	Tb2b	Last Clock Edge of Byte 1 to the First Clock Edge of Byte 2		1.5 Tcy + 40	—	ns	**(Note 2)**
74	TscH2diL, TscL2diL	Hold Time of SDIx Data Input to SCKx Edge		35	—	ns	VDD = 3.3V, VDDCORE = 2.5V
				100	—	ns	VDD = 2.15V
75	TdoR	SDOx Data Output Rise Time		—	25	ns	
76	TdoF	SDOx Data Output Fall Time		—	25	ns	
77	TssH2doZ	$\overline{SSx}$ ↑ to SDOx Output High-Impedance		10	70	ns	
80	TscH2doV, TscL2doV	SDOx Data Output Valid after SCKx Edge		—	50	ns	VDD = 3.3V, VDDCORE = 2.5V
				—	100	ns	VDD = 2.15V
81	TdoV2scH, TdoV2scL	SDOx Data Output Setup to SCKx Edge		Tcy	—	ns	
82	TssL2doV	SDOx Data Output Valid after $\overline{SSx}$ ↓ Edge		—	50	ns	
83	TscH2ssH, TscL2ssH	$\overline{SSx}$ ↑ after SCKx Edge		1.5 Tcy + 40	—	ns	

Note 1: Requires the use of Parameter #73A.

2: Only if Parameter #71A and #72A are used.

FIGURE 30-17: I²C™ BUS START/STOP BITS TIMING

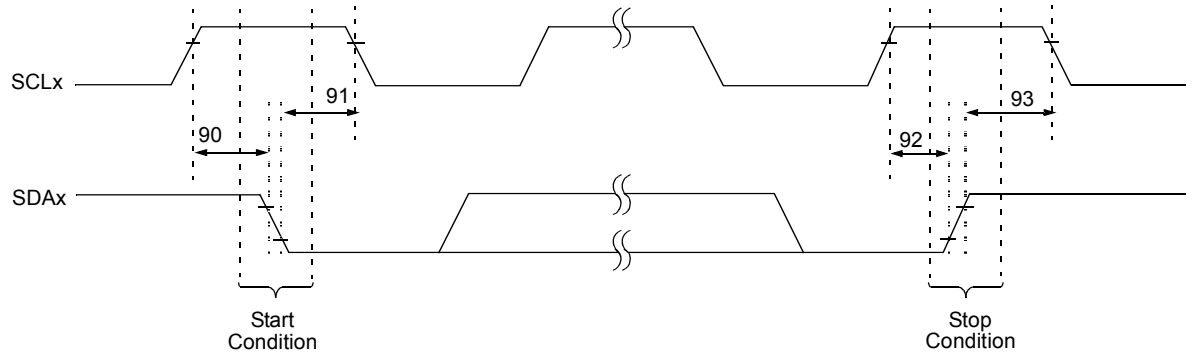

Note: Refer to Figure 30-4 for load conditions.

TABLE 30-25: I²C™ BUS START/STOP BITS REQUIREMENTS (SLAVE MODE)

Param. No.	Symbol	Characteristic		Min	Max	Units	Conditions
90	TSU:STA	Start Condition Setup Time	100 kHz mode	4700	—	ns	Only relevant for Repeated Start condition
			400 kHz mode	600	—		
91	THD:STA	Start Condition Hold Time	100 kHz mode	4000	—	ns	After this period, the first clock pulse is generated
			400 kHz mode	600	—		
92	TSU:STO	Stop Condition Setup Time	100 kHz mode	4700	—	ns	
			400 kHz mode	600	—		
93	THD:STO	Stop Condition Hold Time	100 kHz mode	4000	—	ns	
			400 kHz mode	600	—		

FIGURE 30-18: I²C™ BUS DATA TIMING

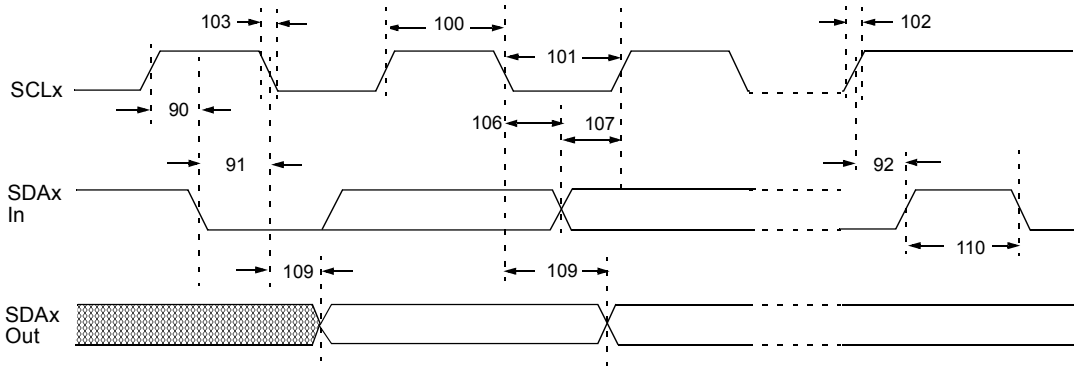

Note: Refer to Figure 30-4 for load conditions.

© 2011 Microchip Technology Inc.

TABLE 30-26: I²C™ BUS DATA REQUIREMENTS (SLAVE MODE)

Param. No.	Symbol	Characteristic		Min	Max	Units	Conditions
100	THIGH	Clock High Time	100 kHz mode	4.0	—	μs	
			400 kHz mode	0.6	—	μs	
			MSSP modules	1.5 TCY	—		
101	TLOW	Clock Low Time	100 kHz mode	4.7	—	μs	
			400 kHz mode	1.3	—	μs	
			MSSP modules	1.5 TCY	—		
102	TR	SDAx and SCLx Rise Time	100 kHz mode	—	1000	ns	
			400 kHz mode	20 + 0.1 CB	300	ns	CB is specified to be from 10 to 400 pF
103	TF	SDAx and SCLx Fall Time	100 kHz mode	—	300	ns	
			400 kHz mode	20 + 0.1 CB	300	ns	CB is specified to be from 10 to 400 pF
90	TSU:STA	Start Condition Setup Time	100 kHz mode	4.7	—	μs	Only relevant for Repeated Start condition
			400 kHz mode	0.6	—	μs	
91	THD:STA	Start Condition Hold Time	100 kHz mode	4.0	—	μs	After this period, the first clock pulse is generated
			400 kHz mode	0.6	—	μs	
106	THD:DAT	Data Input Hold Time	100 kHz mode	0	—	ns	
			400 kHz mode	0	0.9	μs	
107	TSU:DAT	Data Input Setup Time	100 kHz mode	250	—	ns	**(Note 2)**
			400 kHz mode	100	—	ns	
92	TSU:STO	Stop Condition Setup Time	100 kHz mode	4.7	—	μs	
			400 kHz mode	0.6	—	μs	
109	TAA	Output Valid from Clock	100 kHz mode	—	3500	ns	**(Note 1)**
			400 kHz mode	—	—	ns	
110	TBUF	Bus Free Time	100 kHz mode	4.7	—	μs	Time the bus must be free before a new transmission can start
			400 kHz mode	1.3	—	μs	
D102	CB	Bus Capacitive Loading		—	400	pF	

Note 1: As a transmitter, the device must provide this internal minimum delay time to bridge the undefined region (min. 300 ns) of the falling edge of SCLx to avoid unintended generation of Start or Stop conditions.

2: A Fast mode I²C™ bus device can be used in a Standard mode I²C bus system, but the requirement, TSU:DAT ≥ 250 ns, must then be met. This will automatically be the case if the device does not stretch the LOW period of the SCLx signal. If such a device does stretch the LOW period of the SCLx signal, it must output the next data bit to the SDAx line, TR max. + TSU:DAT = 1000 + 250 = 1250 ns (according to the Standard mode I²C bus specification), before the SCLx line is released.

FIGURE 30-19: MSSPx I²C™ BUS START/STOP BITS TIMING WAVEFORMS

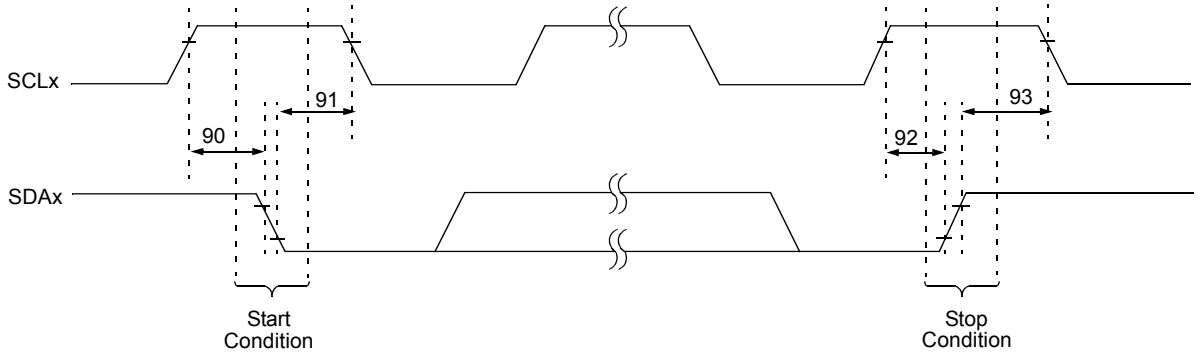

Note: Refer to Figure 30-4 for load conditions.

TABLE 30-27: MSSPx I²C™ BUS START/STOP BITS REQUIREMENTS

Param. No.	Symbol	Characteristic		Min	Max	Units	Conditions
90	TSU:STA	Start Condition Setup Time	100 kHz mode	2(TOSC)(BRG + 1)	—	ns	Only relevant for Repeated Start condition
			400 kHz mode	2(TOSC)(BRG + 1)	—		
91	THD:STA	Start Condition Hold Time	100 kHz mode	2(TOSC)(BRG + 1)	—	ns	After this period, the first clock pulse is generated
			400 kHz mode	2(TOSC)(BRG + 1)	—		
92	TSU:STO	Stop Condition Setup Time	100 kHz mode	2(TOSC)(BRG + 1)	—	ns	
			400 kHz mode	2(TOSC)(BRG + 1)	—		
93	THD:STO	Stop Condition Hold Time	100 kHz mode	2(TOSC)(BRG + 1)	—	ns	
			400 kHz mode	2(TOSC)(BRG + 1)	—		

FIGURE 30-20: MSSPx I²C™ BUS DATA TIMING

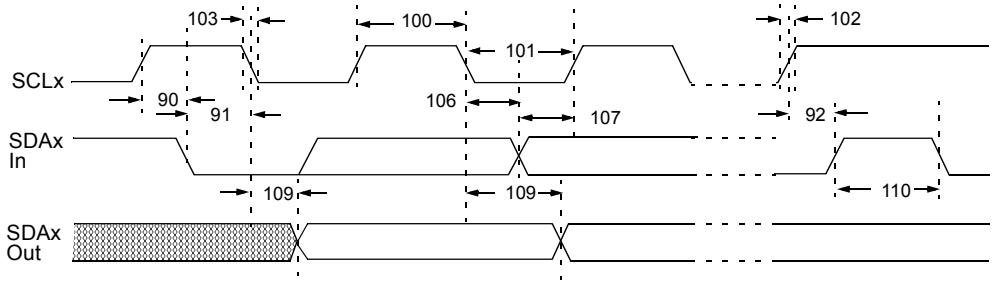

Note: Refer to Figure 30-4 for load conditions.

© 2011 Microchip Technology Inc.

TABLE 30-28: MSSPx I²C™ BUS DATA REQUIREMENTS

Param. No.	Symbol	Characteristic		Min	Max	Units	Conditions
100	THIGH	Clock High Time	100 kHz mode	2(TOSC)(BRG + 1)	—	µs	
			400 kHz mode	2(TOSC)(BRG + 1)	—	µs	
101	TLOW	Clock Low Time	100 kHz mode	2(TOSC)(BRG + 1)	—	µs	
			400 kHz mode	2(TOSC)(BRG + 1)	—	µs	
102	TR	SDAx and SCLx Rise Time	100 kHz mode	—	1000	ns	CB is specified to be from 10 to 400 pF
			400 kHz mode	20 + 0.1 CB	300	ns	
103	TF	SDAx and SCLx Fall Time	100 kHz mode	—	300	ns	CB is specified to be from 10 to 400 pF
			400 kHz mode	20 + 0.1 CB	300	ns	
90	TSU:STA	Start Condition Setup Time	100 kHz mode	2(TOSC)(BRG + 1)	—	µs	Only relevant for Repeated Start condition
			400 kHz mode	2(TOSC)(BRG + 1)	—	µs	
91	THD:STA	Start Condition Hold Time	100 kHz mode	2(TOSC)(BRG + 1)	—	µs	After this period, the first clock pulse is generated
			400 kHz mode	2(TOSC)(BRG + 1)	—	µs	
106	THD:DAT	Data Input Hold Time	100 kHz mode	0	—	ns	
			400 kHz mode	0	0.9	µs	
107	TSU:DAT	Data Input Setup Time	100 kHz mode	250	—	ns	**(Note 1)**
			400 kHz mode	100	—	ns	
92	TSU:STO	Stop Condition Setup Time	100 kHz mode	2(TOSC)(BRG + 1)	—	µs	
			400 kHz mode	2(TOSC)(BRG + 1)	—	µs	
109	TAA	Output Valid from Clock	100 kHz mode	—	3500	ns	
			400 kHz mode	—	1000	ns	
110	TBUF	Bus Free Time	100 kHz mode	4.7	—	µs	Time the bus must be free before a new transmission can start
			400 kHz mode	1.3	—	µs	
D102	CB	Bus Capacitive Loading		—	400	pF	

Note 1: A Fast mode I²C bus device can be used in a Standard mode I²C bus system, but Parameter #107 ≥ 250 ns must then be met. This will automatically be the case if the device does not stretch the LOW period of the SCLx signal. If such a device does stretch the LOW period of the SCLx signal, it must output the next data bit to the SDAx line, Parameter #102 + Parameter #107 = 1000 + 250 = 1250 ns (for 100 kHz mode), before the SCLx line is released.

FIGURE 30-21: EUSARTx SYNCHRONOUS TRANSMISSION (MASTER/SLAVE) TIMING

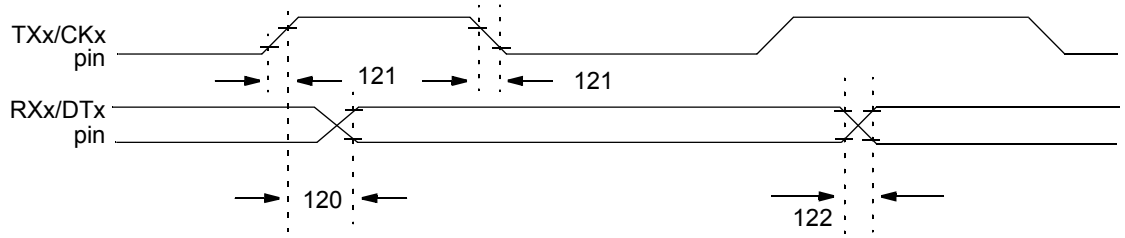

Note: Refer to Figure 30-4 for load conditions.

TABLE 30-29: EUSARTx SYNCHRONOUS TRANSMISSION REQUIREMENTS

Param No.	Symbol	Characteristic	Min	Max	Units	Conditions
120	TCKH2DTV	Sync XMIT (Master and Slave) Clock High to Data Out Valid	—	40	ns	
121	TCKRF	Clock Out Rise Time and Fall Time (Master mode)	—	20	ns	
122	TDTRF	Data Out Rise Time and Fall Time	—	20	ns	

FIGURE 30-22: EUSARTx SYNCHRONOUS RECEIVE (MASTER/SLAVE) TIMING

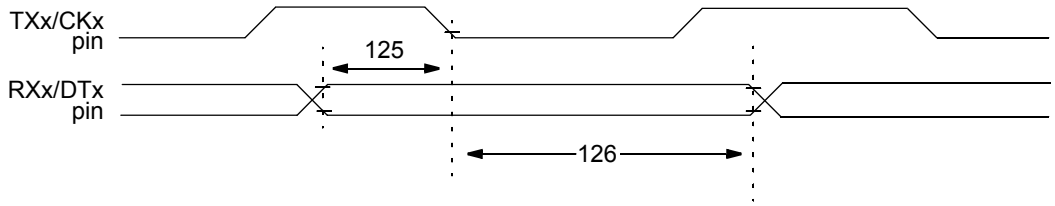

Note: Refer to Figure 30-4 for load conditions.

TABLE 30-30: EUSARTx SYNCHRONOUS RECEIVE REQUIREMENTS

Param. No.	Symbol	Characteristic	Min	Max	Units	Conditions
125	TDTV2CKL	Sync RCV (Master and Slave) Data Hold before CKx ↓ (DTx hold time)	10	—	ns	
126	TCKL2DTL	Data Hold after CKx ↓ (DTx hold time)	15	—	ns	

© 2011 Microchip Technology Inc.

TABLE 30-31: A/D CONVERTER CHARACTERISTICS: PIC18F46J50 FAMILY (INDUSTRIAL)

Param No.	Symbol	Characteristic	Min	Typ	Max	Units	Conditions
A01	NR	Resolution	—	—	10	bit	ΔVREF ≥ 3.0V
A03	EIL	Integral Linearity Error	—	—	<±1	LSb	ΔVREF ≥ 3.0V
A04	EDL	Differential Linearity Error	—	—	<±1	LSb	ΔVREF ≥ 3.0V
A06	EOFF	Offset Error	—	—	<±3	LSb	ΔVREF ≥ 3.0V
A07	EGN	Gain Error	—	—	<±3.5	LSb	ΔVREF ≥ 3.0V
A10		Monotonicity	Guaranteed(1)			—	VSS ≤ VAIN ≤ VREF
A20	ΔVREF	Reference Voltage Range (VREFH – VREFL)	2.0 3	— —	— —	V V	VDD < 3.0V VDD ≥ 3.0V
A21	VREFH	Reference Voltage High	VREFL	—	VDD + 0.3V	V	
A22	VREFL	Reference Voltage Low	VSS – 0.3V	—	VREFH	V	
A25	VAIN	Analog Input Voltage	VREFL	—	VREFH	V	
A30	ZAIN	Recommended Impedance of Analog Voltage Source	—	—	2.5	kΩ	
A50	IREF	VREF Input Current(2)	— —	— —	5 150	μA μA	During VAIN acquisition. During A/D conversion cycle.

Note 1: The A/D conversion result never decreases with an increase in the input voltage and has no missing codes.

2: VREFH current is from RA3/AN3/VREF+/C1INB pin or VDD, whichever is selected as the VREFH source. VREFL current is from the RA2/AN2/VREF-/CVREF/C2INB pin or VSS, whichever is selected as the VREFL source.

FIGURE 30-23: A/D CONVERSION TIMING

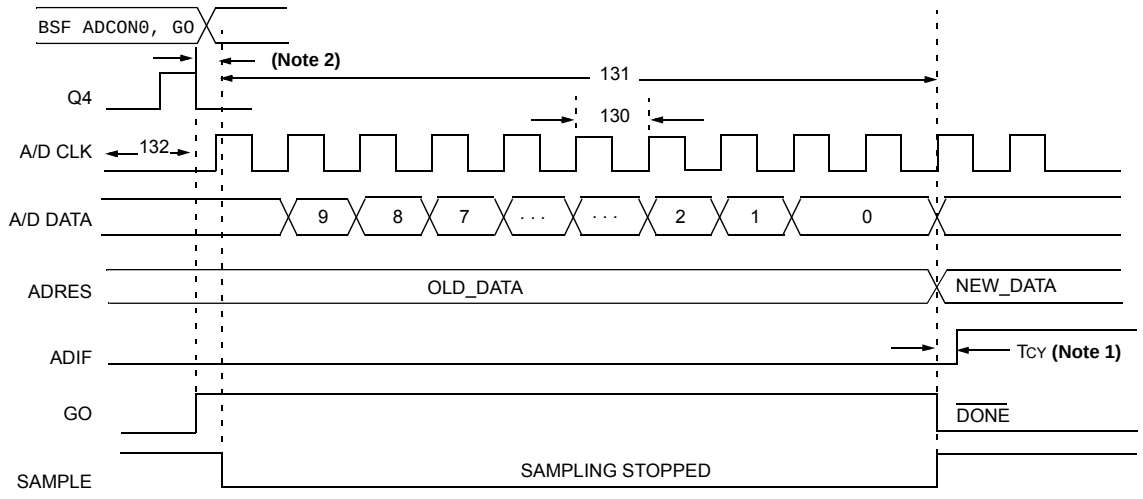

Note 1: If the A/D clock source is selected as RC, a time of TCY is added before the A/D clock starts. This allows the SLEEP instruction to be executed.

2: This is a minimal RC delay (typically 100 ns), which also disconnects the holding capacitor from the analog input.

TABLE 30-32: A/D CONVERSION REQUIREMENTS

Param No.	Symbol	Characteristic	Min	Max	Units	Conditions
130	TAD	A/D Clock Period	0.7	25.0(1)	μs	TOSC based, VREF ≥ 3.0V
131	TCNV	Conversion Time (not including acquisition time)(2)	11	12	TAD	
132	TACQ	Acquisition Time(3)	1.4	—	μs	-40°C to +85°C
135	TSWC	Switching Time from Convert → Sample	—	(Note 4)		
137	TDIS	Discharge Time	0.2	—	μs	

Note 1: The time of the A/D clock period is dependent on the device frequency and the TAD clock divider.

2: ADRES registers may be read on the following TCY cycle.

3: The time for the holding capacitor to acquire the "New" input voltage when the voltage changes full scale after the conversion (VDD to VSS or VSS to VDD). The source impedance (RS) on the input channels is 50Ω.

4: On the following cycle of the device clock.

FIGURE 30-24: USB SIGNAL TIMING

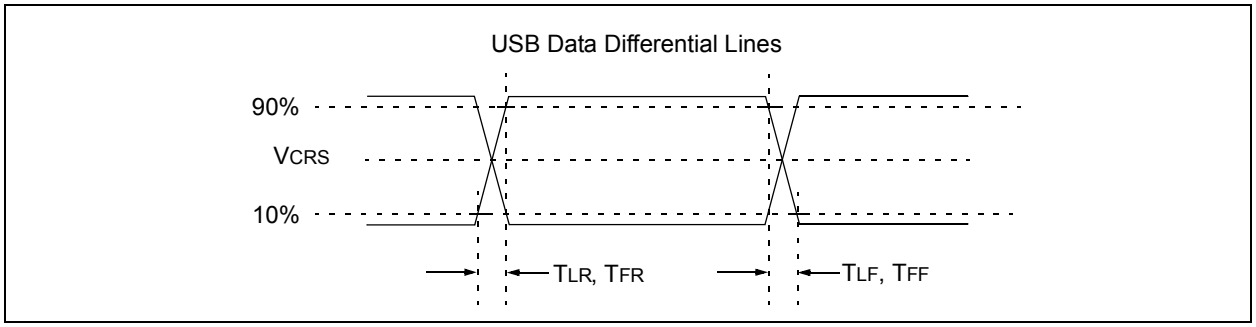

TABLE 30-33: USB LOW-SPEED TIMING REQUIREMENTS

Param No.	Symbol	Characteristic	Min	Typ	Max	Units	Conditions
	TLR	Transition Rise Time	75	—	300	ns	CL = 200 to 600 pF
	TLF	Transition Fall Time	75	—	300	ns	CL = 200 to 600 pF
	TLRFM	Rise/Fall Time Matching	80	—	125	%	

TABLE 30-34: USB FULL-SPEED REQUIREMENTS

Param No.	Symbol	Characteristic	Min	Typ	Max	Units	Conditions
	TFR	Transition Rise Time	4	—	20	ns	CL = 50 pF
	TFF	Transition Fall Time	4	—	20	ns	CL = 50 pF
	TFRFM	Rise/Fall Time Matching	90	—	111.1	%	

© 2011 Microchip Technology Inc.

31.0 PACKAGING INFORMATION

31.1 Package Marking Information

28-Lead SPDIP

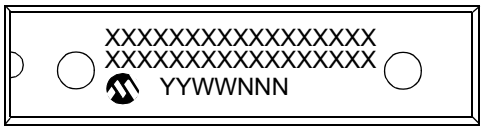

Example

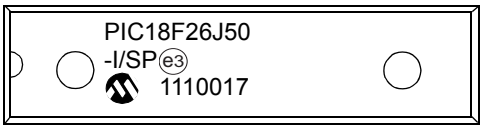

28-Lead SSOP



Example



28-Lead SOIC (.300”)

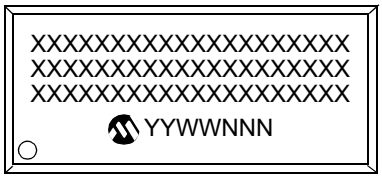

Example

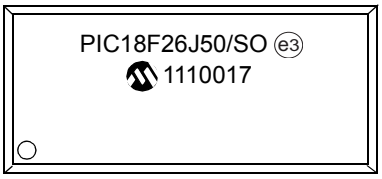

28-Lead QFN

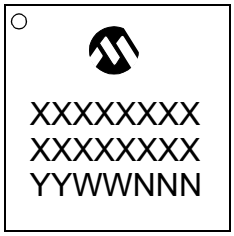

Example



Legend:	XX...X	Customer-specific information
	Y	Year code (last digit of calendar year)
	YY	Year code (last 2 digits of calendar year)
	WW	Week code (week of January 1 is week ‘01’)
	NNN	Alphanumeric traceability code
		Pb-free JEDEC designator for Matte Tin (Sn)
	*	This package is Pb-free. The Pb-free JEDEC designator (e3) can be found on the outer packaging for this package.

Note: In the event the full Microchip part number cannot be marked on one line, it will be carried over to the next line, thus limiting the number of available characters for customer-specific information.

44-Lead QFN

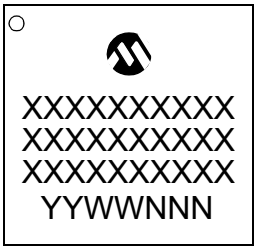

Example



44-Lead TQFP

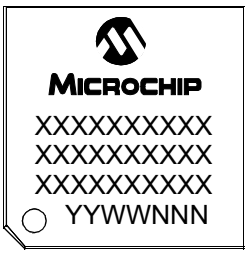

Example

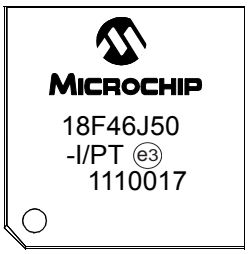

© 2011 Microchip Technology Inc.

31.2 Package Details

The following sections give the technical details of the packages.

28-Lead Skinny Plastic Dual In-Line (SP) – 300 mil Body [SPDIP]

Note: For the most current package drawings, please see the Microchip Packaging Specification located at http://www.microchip.com/packaging

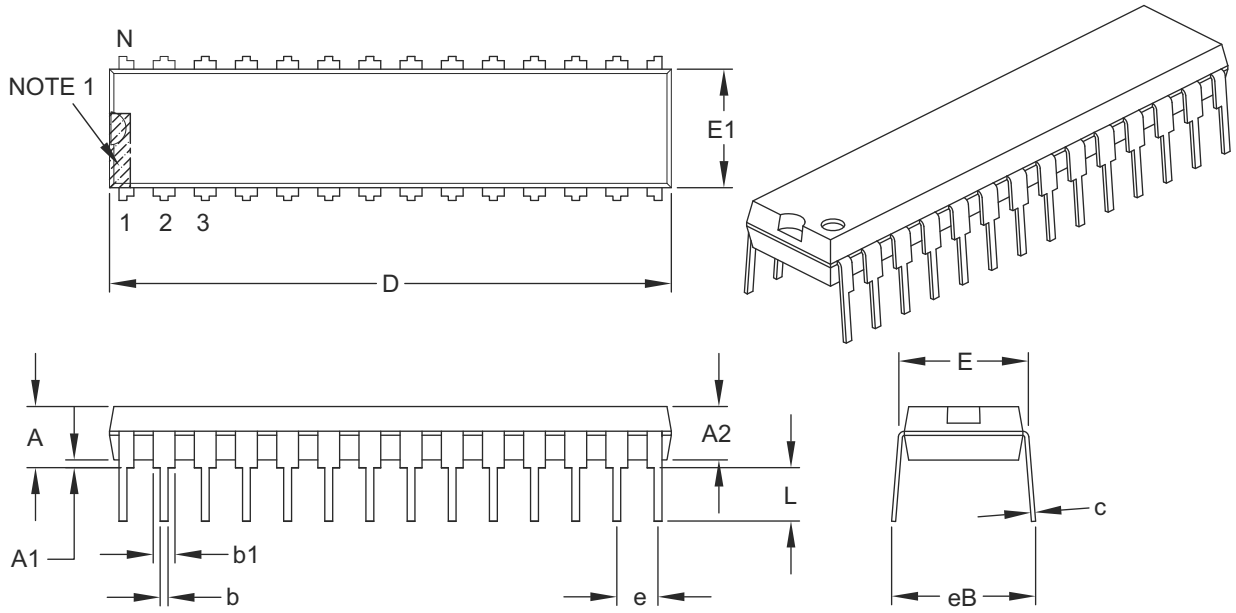

Units		INCHES		
Dimension Limits		MIN	NOM	MAX
Number of Pins	N		28	
Pitch	e		.100 BSC	
Top to Seating Plane	A	–	–	.200
Molded Package Thickness	A2	.120	.135	.150
Base to Seating Plane	A1	.015	–	–
Shoulder to Shoulder Width	E	.290	.310	.335
Molded Package Width	E1	.240	.285	.295
Overall Length	D	1.345	1.365	1.400
Tip to Seating Plane	L	.110	.130	.150
Lead Thickness	c	.008	.010	.015
Upper Lead Width	b1	.040	.050	.070
Lower Lead Width	b	.014	.018	.022
Overall Row Spacing §	eB	–	–	.430

Notes:

1. Pin 1 visual index feature may vary, but must be located within the hatched area.
2. § Significant Characteristic.
3. Dimensions D and E1 do not include mold flash or protrusions. Mold flash or protrusions shall not exceed .010" per side.
4. Dimensioning and tolerancing per ASME Y14.5M.

   BSC: Basic Dimension. Theoretically exact value shown without tolerances.

Microchip Technology Drawing C04-070B

28-Lead Plastic Shrink Small Outline (SS) – 5.30 mm Body [SSOP]

Note: For the most current package drawings, please see the Microchip Packaging Specification located at http://www.microchip.com/packaging

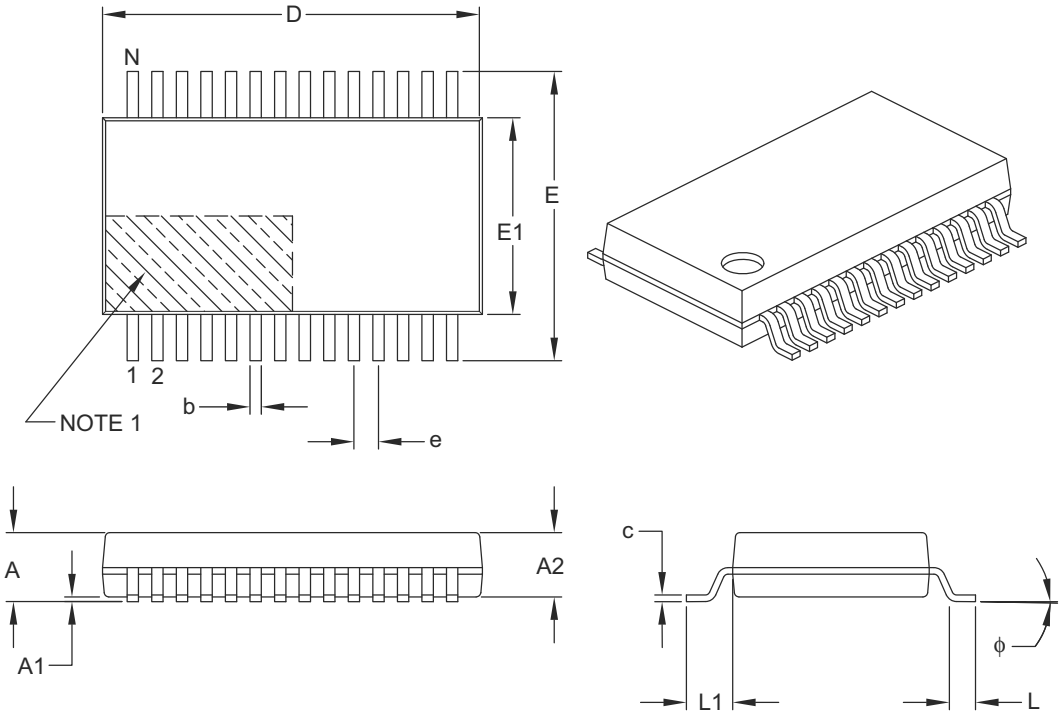

Units		MILLIMETERS		
Dimension Limits		MIN	NOM	MAX
Number of Pins	N		28	
Pitch	e		0.65 BSC	
Overall Height	A	–	–	2.00
Molded Package Thickness	A2	1.65	1.75	1.85
Standoff	A1	0.05	–	–
Overall Width	E	7.40	7.80	8.20
Molded Package Width	E1	5.00	5.30	5.60
Overall Length	D	9.90	10.20	10.50
Foot Length	L	0.55	0.75	0.95
Footprint	L1		1.25 REF	
Lead Thickness	c	0.09	–	0.25
Foot Angle	φ	0°	4°	8°
Lead Width	b	0.22	–	0.38

Notes:

1. Pin 1 visual index feature may vary, but must be located within the hatched area.
2. Dimensions D and E1 do not include mold flash or protrusions. Mold flash or protrusions shall not exceed 0.20 mm per side.
3. Dimensioning and tolerancing per ASME Y14.5M.

BSC: Basic Dimension. Theoretically exact value shown without tolerances.
REF: Reference Dimension, usually without tolerance, for information purposes only.

Microchip Technology Drawing C04-073B

© 2011 Microchip Technology Inc.

28-Lead Plastic Shrink Small Outline (SS) - 5.30 mm Body [SSOP]

Note: For the most current package drawings, please see the Microchip Packaging Specification located at http://www.microchip.com/packaging

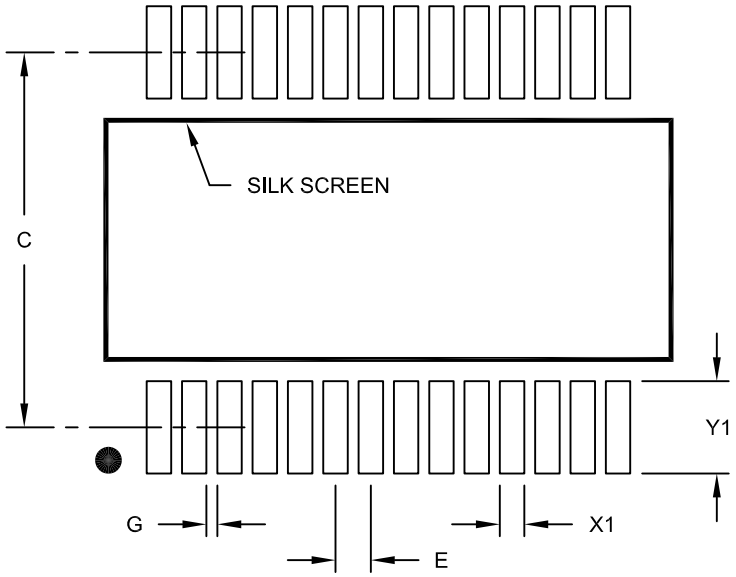

RECOMMENDED LAND PATTERN

Units		MILLIMETERS		
Dimension Limits		MIN	NOM	MAX
Contact Pitch	E		0.65 BSC	
Contact Pad Spacing	C		7.20	
Contact Pad Width (X28)	X1			0.45
Contact Pad Length (X28)	Y1			1.75
Distance Between Pads	G	0.20		

Notes:

1. Dimensioning and tolerancing per ASME Y14.5M

BSC: Basic Dimension. Theoretically exact value shown without tolerances.

Microchip Technology Drawing No. C04-2073A

28-Lead Plastic Small Outline (SO) – Wide, 7.50 mm Body [SOIC]

Note: For the most current package drawings, please see the Microchip Packaging Specification located at http://www.microchip.com/packaging

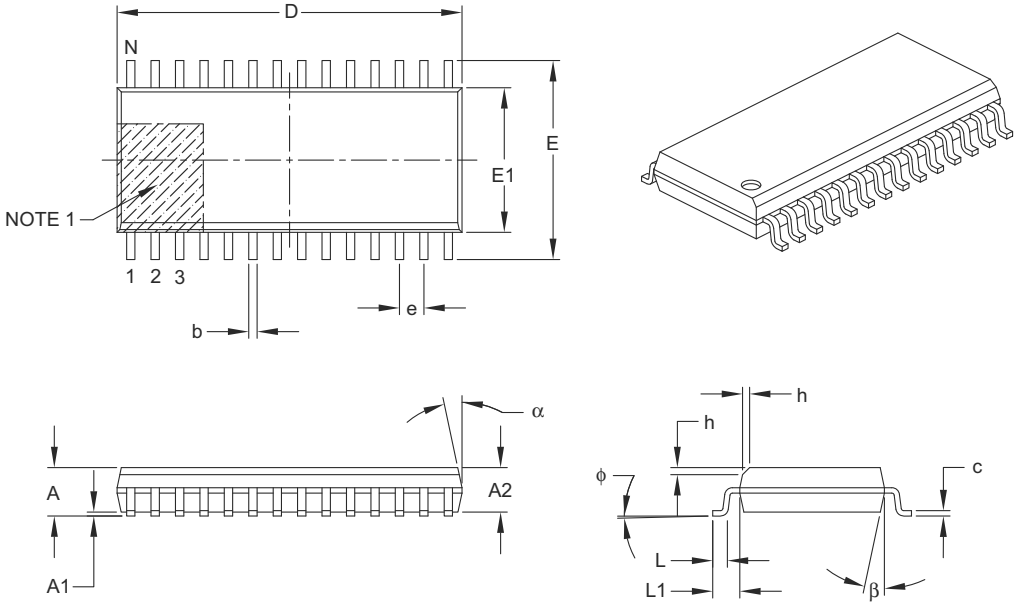

Units		MILLIMETERS		
Dimension Limits		MIN	NOM	MAX
Number of Pins	N		28	
Pitch	e		1.27 BSC	
Overall Height	A	–	–	2.65
Molded Package Thickness	A2	2.05	–	–
Standoff §	A1	0.10	–	0.30
Overall Width	E		10.30 BSC	
Molded Package Width	E1		7.50 BSC	
Overall Length	D		17.90 BSC	
Chamfer (optional)	h	0.25	–	0.75
Foot Length	L	0.40	–	1.27
Footprint	L1		1.40 REF	
Foot Angle Top	ϕ	0°	–	8°
Lead Thickness	c	0.18	–	0.33
Lead Width	b	0.31	–	0.51
Mold Draft Angle Top	α	5°	–	15°
Mold Draft Angle Bottom	β	5°	–	15°

Notes:

1. Pin 1 visual index feature may vary, but must be located within the hatched area.
2. § Significant Characteristic.
3. Dimensions D and E1 do not include mold flash or protrusions. Mold flash or protrusions shall not exceed 0.15 mm per side.
4. Dimensioning and tolerancing per ASME Y14.5M.

BSC: Basic Dimension. Theoretically exact value shown without tolerances.
REF: Reference Dimension, usually without tolerance, for information purposes only.

Microchip Technology Drawing C04-052B

© 2011 Microchip Technology Inc.

28-Lead Plastic Small Outline (SO) - Wide, 7.50 mm Body [SOIC]

Note: For the most current package drawings, please see the Microchip Packaging Specification located at http://www.microchip.com/packaging

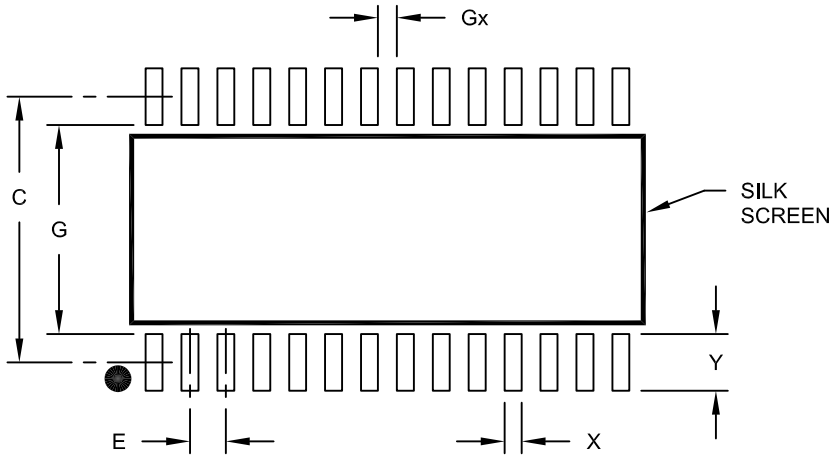

RECOMMENDED LAND PATTERN

Units		MILLIMETERS		
Dimension Limits		MIN	NOM	MAX
Contact Pitch	E		1.27 BSC	
Contact Pad Spacing	C		9.40	
Contact Pad Width (X28)	X			0.60
Contact Pad Length (X28)	Y			2.00
Distance Between Pads	Gx	0.67		
Distance Between Pads	G	7.40		

Notes:

1. Dimensioning and tolerancing per ASME Y14.5M

BSC: Basic Dimension. Theoretically exact value shown without tolerances.

Microchip Technology Drawing No. C04-2052A

28-Lead Plastic Quad Flat, No Lead Package (ML) – 6x6 mm Body [QFN] with 0.55 mm Contact Length

Note: For the most current package drawings, please see the Microchip Packaging Specification located at http://www.microchip.com/packaging

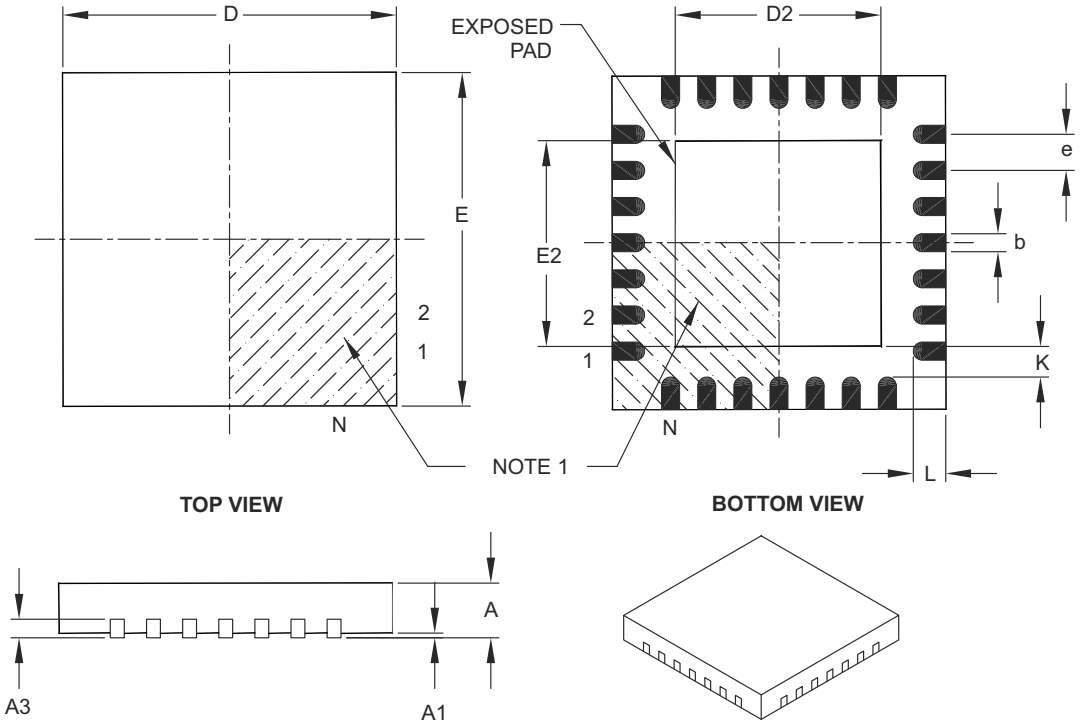

Units		MILLIMETERS		
Dimension Limits		MIN	NOM	MAX
Number of Pins	N		28	
Pitch	e		0.65 BSC	
Overall Height	A	0.80	0.90	1.00
Standoff	A1	0.00	0.02	0.05
Contact Thickness	A3		0.20 REF	
Overall Width	E		6.00 BSC	
Exposed Pad Width	E2	3.65	3.70	4.20
Overall Length	D		6.00 BSC	
Exposed Pad Length	D2	3.65	3.70	4.20
Contact Width	b	0.23	0.30	0.35
Contact Length	L	0.50	0.55	0.70
Contact-to-Exposed Pad	K	0.20	–	–

Notes:

1. Pin 1 visual index feature may vary, but must be located within the hatched area.
2. Package is saw singulated.
3. Dimensioning and tolerancing per ASME Y14.5M.

BSC: Basic Dimension. Theoretically exact value shown without tolerances.

REF: Reference Dimension, usually without tolerance, for information purposes only.

Microchip Technology Drawing C04-105B

© 2011 Microchip Technology Inc.

28-Lead Plastic Quad Flat, No Lead Package (ML) – 6x6 mm Body [QFN] with 0.55 mm Contact Length

Note: For the most current package drawings, please see the Microchip Packaging Specification located at http://www.microchip.com/packaging

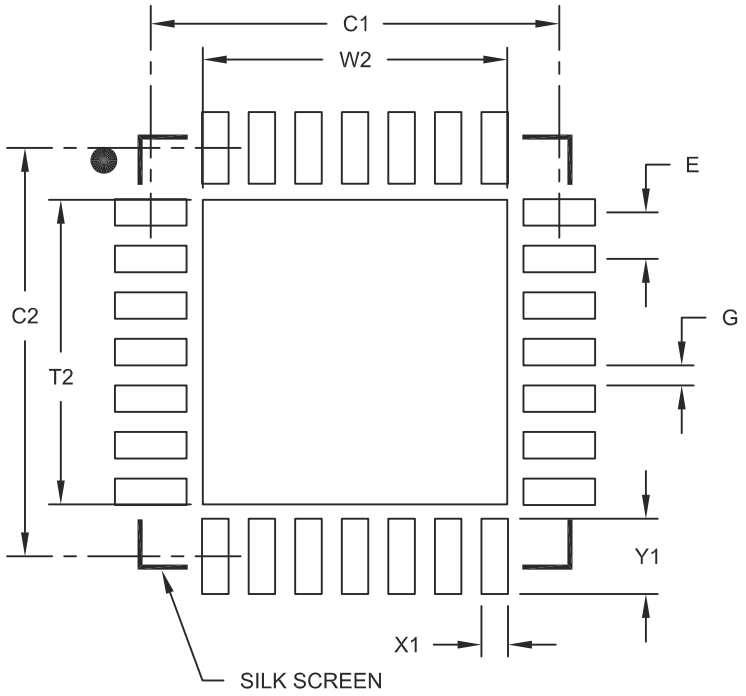

RECOMMENDED LAND PATTERN

Units		MILLIMETERS		
Dimension Limits		MIN	NOM	MAX
Contact Pitch	E		0.65 BSC	
Optional Center Pad Width	W2			4.25
Optional Center Pad Length	T2			4.25
Contact Pad Spacing	C1		5.70	
Contact Pad Spacing	C2		5.70	
Contact Pad Width (X28)	X1			0.37
Contact Pad Length (X28)	Y1			1.00
Distance Between Pads	G	0.20		

Notes:

1. Dimensioning and tolerancing per ASME Y14.5M

BSC: Basic Dimension. Theoretically exact value shown without tolerances.

Microchip Technology Drawing No. C04-2105A

44-Lead Plastic Quad Flat, No Lead Package (ML) – 8x8 mm Body [QFN]

Note: For the most current package drawings, please see the Microchip Packaging Specification located at http://www.microchip.com/packaging

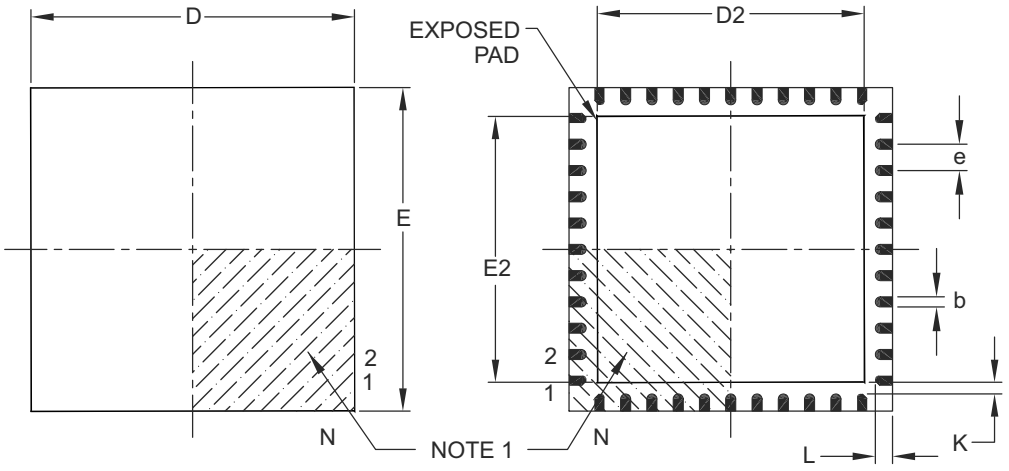

TOP VIEW **BOTTOM VIEW**

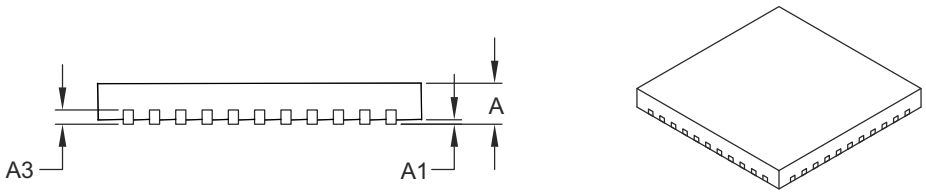

Units		MILLIMETERS		
Dimension Limits		MIN	NOM	MAX
Number of Pins	N		44	
Pitch	e		0.65 BSC	
Overall Height	A	0.80	0.90	1.00
Standoff	A1	0.00	0.02	0.05
Contact Thickness	A3		0.20 REF	
Overall Width	E		8.00 BSC	
Exposed Pad Width	E2	6.30	6.45	6.80
Overall Length	D		8.00 BSC	
Exposed Pad Length	D2	6.30	6.45	6.80
Contact Width	b	0.25	0.30	0.38
Contact Length	L	0.30	0.40	0.50
Contact-to-Exposed Pad	K	0.20	–	–

Notes:

1. Pin 1 visual index feature may vary, but must be located within the hatched area.
2. Package is saw singulated.
3. Dimensioning and tolerancing per ASME Y14.5M.

BSC: Basic Dimension. Theoretically exact value shown without tolerances.
REF: Reference Dimension, usually without tolerance, for information purposes only.

Microchip Technology Drawing C04-103B

© 2011 Microchip Technology Inc.

44-Lead Plastic Quad Flat, No Lead Package (ML) – 8x8 mm Body [QFN]

Note: For the most current package drawings, please see the Microchip Packaging Specification located at http://www.microchip.com/packaging

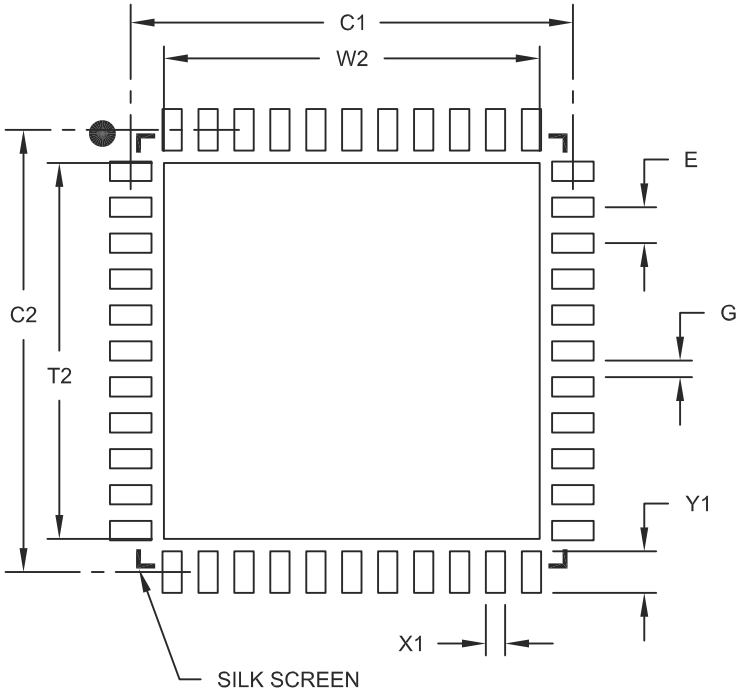

RECOMMENDED LAND PATTERN

Units		MILLIMETERS		
Dimension Limits		MIN	NOM	MAX
Contact Pitch	E		0.65 BSC	
Optional Center Pad Width	W2			6.80
Optional Center Pad Length	T2			6.80
Contact Pad Spacing	C1		8.00	
Contact Pad Spacing	C2		8.00	
Contact Pad Width (X44)	X1			0.35
Contact Pad Length (X44)	Y1			0.80
Distance Between Pads	G	0.25		

Notes:

1. Dimensioning and tolerancing per ASME Y14.5M

BSC: Basic Dimension. Theoretically exact value shown without tolerances.

Microchip Technology Drawing No. C04-2103A

44-Lead Plastic Thin Quad Flatpack (PT) – 10x10x1 mm Body, 2.00 mm [TQFP]

Note: For the most current package drawings, please see the Microchip Packaging Specification located at http://www.microchip.com/packaging

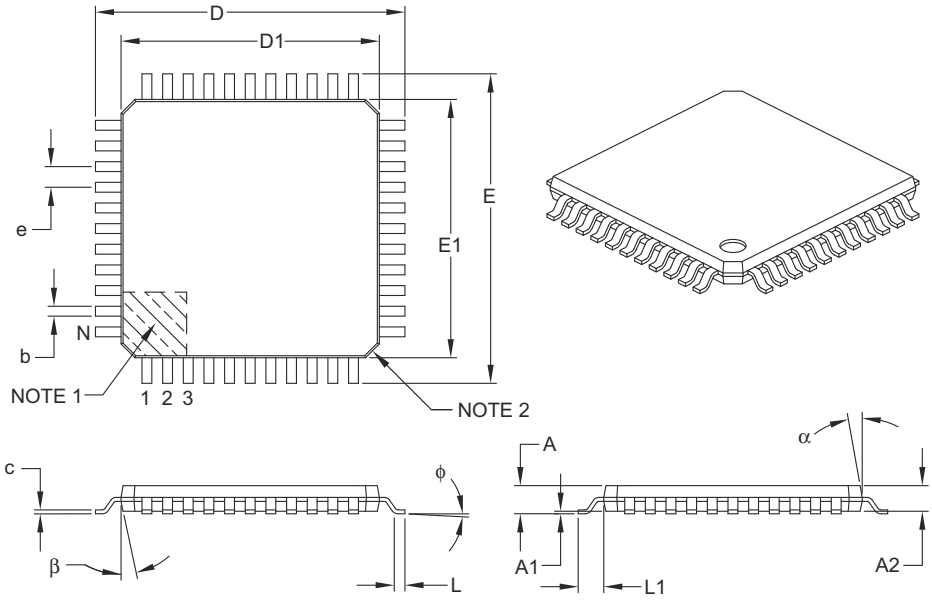

Units		MILLIMETERS		
Dimension Limits		MIN	NOM	MAX
Number of Leads	N		44	
Lead Pitch	e		0.80 BSC	
Overall Height	A	–	–	1.20
Molded Package Thickness	A2	0.95	1.00	1.05
Standoff	A1	0.05	–	0.15
Foot Length	L	0.45	0.60	0.75
Footprint	L1		1.00 REF	
Foot Angle	φ	0°	3.5°	7°
Overall Width	E		12.00 BSC	
Overall Length	D		12.00 BSC	
Molded Package Width	E1		10.00 BSC	
Molded Package Length	D1		10.00 BSC	
Lead Thickness	c	0.09	–	0.20
Lead Width	b	0.30	0.37	0.45
Mold Draft Angle Top	α	11°	12°	13°
Mold Draft Angle Bottom	β	11°	12°	13°

Notes:

1. Pin 1 visual index feature may vary, but must be located within the hatched area.
2. Chamfers at corners are optional; size may vary.
3. Dimensions D1 and E1 do not include mold flash or protrusions. Mold flash or protrusions shall not exceed 0.25 mm per side.
4. Dimensioning and tolerancing per ASME Y14.5M.

BSC: Basic Dimension. Theoretically exact value shown without tolerances.

REF: Reference Dimension, usually without tolerance, for information purposes only.

Microchip Technology Drawing C04-076B

© 2011 Microchip Technology Inc.

44-Lead Plastic Thin Quad Flatpack (PT) – 10x10x1 mm Body, 2.00 mm [TQFP]

Note: For the most current package drawings, please see the Microchip Packaging Specification located at http://www.microchip.com/packaging

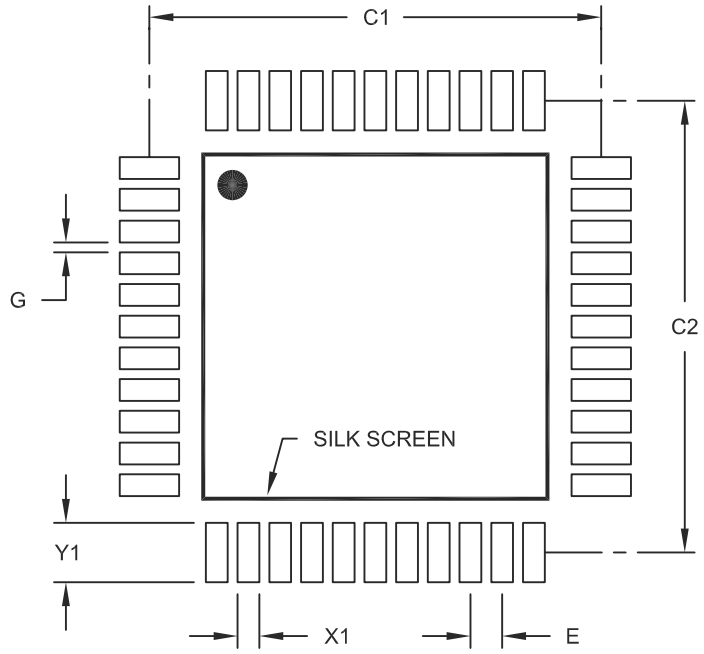

RECOMMENDED LAND PATTERN

Units		MILLIMETERS		
Dimension Limits		MIN	NOM	MAX
Contact Pitch	E		0.80 BSC	
Contact Pad Spacing	C1		11.40	
Contact Pad Spacing	C2		11.40	
Contact Pad Width (X44)	X1			0.55
Contact Pad Length (X44)	Y1			1.50
Distance Between Pads	G	0.25		

Notes:

1. Dimensioning and tolerancing per ASME Y14.5M

BSC: Basic Dimension. Theoretically exact value shown without tolerances.

Microchip Technology Drawing No. C04-2076A

NOTES:

© 2011 Microchip Technology Inc.

APPENDIX A: REVISION HISTORY

Revision A (September 2008)

Original data sheet for the PIC18F46J50 family of devices.

Revision B (March 2009)

Changes to the Electrical Characteristics and minor text edits throughout the document.

Revision C (October 2009)

Removed “Preliminary” marking.

Revision D (March 2011)

Added **Section 2.0, Guidelines for Getting Started with PIC18FJ Microcontrollers**. Renamed CTEDG1 and CTEDG2 pin functions to CTED1 and CTED2, respectively. Clarifications and minor text edits throughout the document.

APPENDIX B: DEVICE DIFFERENCES

The differences between the devices listed in this data sheet are shown in Table B-1,

TABLE B-1: DEVICE DIFFERENCES BETWEEN PIC18F46J50 FAMILY MEMBERS

Features	PIC18F24J50	PIC18F25J50	PIC18F26J50	PIC18F44J50	PIC18F45J50	PIC18F46J50
Program Memory	16K	32K	64K	16K	32K	64K
Program Memory (Instructions)	8,192	16,384	32,768	8,192	16,384	32,768
I/O Ports (Pins)	Ports A, B, C			Ports A, B, C, D, E		
10-Bit ADC Module	10 Input Channels			13 Input Channels		
Packages	28-Pin QFN, SOIC, SSOP and SPDIP (300 mil)			44-Pin QFN and TQFP		

NOTES:

© 2011 Microchip Technology Inc.

INDEX

A

A/D 347
A/D Converter Interrupt, Configuring 351
Acquisition Requirements 352
ADCAL Bit 355
ADRESH Register 350
Analog Port Pins, Configuring 353
Associated Registers 356
Automatic Acquisition Time 353
Calibration 355
Configuring the Module 351
Conversion Clock (TAD) 353
Conversion Requirements 530
Conversion Status (GO/DONE Bit) 350
Conversions 354
Converter Characteristics 529
Operation in Power-Managed Modes 355
Special Event Trigger (ECCPx) 354
Use of the ECCP2 Trigger 354
Absolute Maximum Ratings 489
AC (Timing) Characteristics 508
Load Conditions for Device Timing Specifications 509
Parameter Symbology 508
Temperature and Voltage Specifications 509
Timing Conditions 509
ACKSTAT 313
ACKSTAT Status Flag 313
ADCAL Bit 355
ADCON0 Register
GO/DONE Bit 350
ADDFSR 478
ADDLW 441
ADDULNK 478
ADDWF 441
ADDWFC 442
ADRESL Register 350
Analog-to-Digital Converter. *See* A/D.
ANDLW 442
ANDWF 443
Assembler
MPASM Assembler 486
Auto-Wake-up on Sync Break Character 338

B

Baud Rate Generator 309
BC 443
BCF 444
BF 313
BF Status Flag 313
Block Diagrams
+5V System Hardware Interface 133
8-Bit Multiplexed Address and Data Application 191
A/D 350
Analog Input Model 351
Baud Rate Generator 310
Capture Mode Operation 248
Clock Source Multiplexing 238
Comparator Analog Input Model 387
Comparator Output 385
Comparator Voltage Reference 391
Comparator Voltage Reference Output Buffer Example 393
Compare Mode Operation 249
CTMU 401
CTMU Current Source Calibration Circuit 404
CTMU Typical Connections and Internal Configuration for Pulse Delay Generation 412
CTMU Typical Connections and Internal Configuration for Time Measurement 411
Demultiplexed Addressing Mode with Chip Select 184
Device Clock 36
Enhanced PWM Mode 253
EUSART Transmit 334
EUSARTx Receive 337
Fail-Safe Clock Monitor 432
Fully Multiplexed Addressing Mode with Chip Select 184
Generic I/O Port Operation 131
High/Low-Voltage Detect with External Input 396
Interrupt Logic 116
LCD Control, Byte Mode 192
Legacy Parallel Slave Port 178
MSSPx (I^2C Master Mode) 308
MSSPx (I^2C Mode) 288
MSSPx (SPI Mode) 270
Multiplexed Addressing Application 191
On-Chip Reset Circuit 63
Parallel EEPROM (Up to 15-Bit Address, 16-Bit Data) 192
Parallel EEPROM (Up to 15-Bit Address, 8-Bit Data) 192
Parallel Master/Slave Connection Addressed Buffer 181
Parallel Master/Slave Connection Buffered 180
Partially Multiplexed Addressing Application 191
Partially Multiplexed Addressing Mode with Chip Select 184
PIC18F2XJ50 (28-Pin) 14
PIC18F4XJ50 (44-Pin) 15
PMP Module 169
PWM Operation (Simplified) 250
Reads From Flash Program Memory 107
RTCC 225
Simplified Steering 266
Single Comparator 387
Table Read Operation 103
Table Write Operation 104
Table Writes to Flash Program Memory 109
Timer0 in 16-Bit Mode 196
Timer0 in 8-Bit Mode 196
Timer1 204
Timer2 212
Timer3 216
Timer4 224
USB External Circuitry 362
USB Interrupt Logic 372
USB Peripheral and Options 357
Using the Open-Drain Output 133
USTAT FIFO 363
Watchdog Timer 427
BN 444
BNC 445
BNN 445
BNOV 446
BNZ 446
BOR. *See* Brown-out Reset.

BOV 449
BRA 447
Break Character (12-Bit) Transmit and Receive 340
Brown-out Reset (BOR) 65
and On-Chip Voltage Regulator 430
Detecting 65
Disabling in Sleep Mode 65
BSF 447
BTFSC 448
BTFSS 448
BTG 449
BZ 450

C

C Compilers
MPLAB C18 486
Calibration (A/D Converter) 355
CALL 450
CALLW 479
Capture (ECCP Module) 248
CCPRxH:CCPRxL Registers 248
ECCP Pin Configuration 248
Prescaler 248
Software Interrupt 248
Timer1/Timer3 Mode Selection 248
Clock Sources 42
Effects of Power-Managed Modes 45
Selecting the 31 kHz Source 42
Selection Using OSCCON Register 42
CLRF 451
CLRWDT 451
Code Examples
16 x 16 Signed Multiply Routine 114
16 x 16 Unsigned Multiply Routine 114
512-Byte SPI Master Mode Init and Transfer 286
8 x 8 Signed Multiply Routine 113
8 x 8 Unsigned Multiply Routine 113
A/D Calibration Routine 355
Calculating Baud Rate Error 328
Capacitance Calibration Routine 408
Capacitive Touch Switch Routine 410
Changing Between Capture Prescalers 248
Clearing ACTVIF Bit 374
Communicating with the +5V System 133
Computed GOTO Using an Offset Value 81
Configuring EUSART2 Input and Output Functions 154
Current Calibration Routine 406
Erasing Flash Program Memory 108
Fast Register Stack 81
How to Clear RAM (Bank 1) Using Indirect Addressing 97
Initializing PORTA 136
Initializing PORTB 139
Initializing PORTC 143
Initializing PORTD 146
Initializing PORTE 148
Loading the SSP1BUF (SSP1SR) Register 273
Reading a Flash Program Memory Word 107
Saving STATUS, WREG and BSR Registers in RAM 130
Setting the RTCWREN Bit 239
Setup for CTMU Calibration Routines 405
Single-Word Write to Flash Program Memory 111
Two-Word Instructions 83
Ultra Low-Power Wake-up Initialization 61
Writing to Flash Program Memory 110
Code Protection 417
COMF 452
Comparator 385
Analog Input Connection Considerations 387
Associated Registers 390
Configuration, Control 388
Effects of a Reset 390
Enable and Input Selection 388
Enable and Output Selection 388
Interrupts 389
Operation 387
Operation During Sleep 390
Registers 385
Response Time 387
Comparator Specifications 504
Comparator Voltage Reference 391
Accuracy and Error 393
Associated Registers 393
Configuring 392
Connection Considerations 393
Effects of a Reset 393
Operation During Sleep 393
Compare (ECCP Module) 249
CCPRx Register 249
Pin Configuration 249
Software Interrupt 249
Special Event Trigger 221, 249
Timer1/Timer3 Mode Selection 249
Compare (ECCPx Module)
Special Event Trigger 354
Computed GOTO 81
Configuration Bits 417
Configuration Mismatch (CM) Reset 66
Configuration Register Protection 433
Configuration Registers
Bits and Device IDs 418
Mapping Flash Configuration Words 418
Core Features
Easy Migration 12
Expanded Memory 11
Extended Instruction Set 12
nanoWatt Technology 11
Oscillator Options and Features 11
Universal Serial Bus (USB) 11
CPFSEQ 452
CPFSGT 453
CPFSLT 453
Crystal Oscillator/Ceramic Resonators 37
CTMU
Associated Registers 415
Calibration 403
Creating a Delay 412
Effects of a Reset 412
Initialization 403
Measuring Capacitance 409
Measuring Time 411
Operation 402
Operation During Idle Mode 412
Operation During Sleep Mode 412
CTMU Current Source Specifications 505
Customer Change Notification Service 559
Customer Notification Service 559
Customer Support 559

© 2011 Microchip Technology Inc.

D

Data Addressing Modes 97
  Comparing Addressing Modes with the Extended Instruction Set Enabled 101
  Direct 97
  Indexed Literal Offset 100
    BSR 102
    Instructions Affected 100
    Mapping Access Bank 102
  Indirect 97
  Inherent and Literal 97
Data Memory 84
  Access Bank 86
  Bank Select Register (BSR) 84
  Extended Instruction Set 99
  General Purpose Registers 86
  Memory Maps
    Access Bank Special Function Registers 87
    Non-Access Bank Special Function Registers 88
    PIC18F46J50 Family Devices 85
  Special Function Registers 87
    Context Defined SFRs 89
  USB RAM 84
DAW 454
DC Characteristics 502
  Power-Down and Supply Current 492
  Supply Voltage 491
DCFSNZ 455
DECF 454
DECFSZ 455
Development Support 485
Device Differences 545
Device Overview 11
  Details on Individual Family Members 12
  Features (28-Pin Devices) 13
  Features (44-Pin Devices) 13
  Other Special Features 12
Direct Addressing 98

E

Effect on Standard PICMCU Instructions 482
Electrical Characteristics 489
  Absolute Maximum Ratings 489
  DC Characteristics 491–502
Enhanced Capture/Compare/PWM (ECCP) 245
  Associated Registers 267
  Capture Mode. *See* Capture.
  Compare Mode. *See* Compare.
  ECCP Mode and Timer Resources 247
  Enhanced PWM Mode 253
    Auto-Restart 262
    Auto-Shutdown 261
    Direction Change in Full-Bridge Output Mode 259
    Full-Bridge Application 257
    Full-Bridge Mode 257
    Half-Bridge Application 256
    Half-Bridge Application Examples 263
    Half-Bridge Mode 256
    Output Relationships (Active-High and Active-Low) 254
    Output Relationships Diagram 255
    Programmable Dead-Band Delay 263
    Shoot-Through Current 263
    Start-up Considerations 260
    Outputs and Configuration 247
Enhanced Universal Synchronous Asynchronous Receiver Transmitter (EUSART). *See* EUSART.
Equations
  A/D Acquisition Time 352
  A/D Minimum Charging Time 352
  Bytes Transmitted for a Given DMABC 284
  Calculating Output of Comparator Voltage Reference 392
  Calculating the Minimum Required Acquisition Time 352
  Calculating USB Transceiver Current 380
  Estimating USB Transceiver Current Consumption 379
Errata 9
EUSART 323
  Asynchronous Mode 333
    12-Bit Break Transmit and Receive 340
    Associated Registers, Reception 338
    Associated Registers, Transmission 335
    Auto-Wake-up on Sync Break 338
    Receiver 336
    Setting Up 9-Bit Mode with Address Detect 336
    Setting Up Asynchronous Receive 336
    Transmitter 333
  Baud Rate Generator
    Operation in Power-Managed Mode 327
  Baud Rate Generator (BRG) 327
    Associated Registers 328
    Auto-Baud Rate Detect 331
    Baud Rates, Asynchronous Modes 329
    Formulas 327
    High Baud Rate Select (BRGH Bit) 327
    Sampling 327
  Synchronous Master Mode 341
    Associated Registers, Reception 344
    Associated Registers, Transmission 342
    Reception 343
    Transmission 341
  Synchronous Slave Mode 345
    Associated Registers, Reception 346
    Associated Registers, Transmission 345
    Reception 346
    Transmission 345
Extended Instruction Set
  ADDFSR 478
  ADDULNK 478
  CALLW 479
  MOVSF 479
  MOVSS 480
  PUSHL 480
  SUBFSR 481
  SUBULNK 481
Extended Instructions
  Considerations when Enabling 482
External Clock Input 38

F

Fail-Safe Clock Monitor 417, 431
  Interrupts in Power-Managed Modes 433
  POR or Wake-up From Sleep 433
  WDT During Oscillator Failure 432
Fast Register Stack 81
Features Overview 3
  Comparative Table 4
Firmware Instructions 435

Flash Program Memory 103
Associated Registers 112
Control Registers 104
EECON1 and EECON2 104
TABLAT (Table Latch) Register 106
TBLPTR (Table Pointer) Register 106
Erase Sequence 108
Erasing 108
Memory Write Sequence 111
Operation During Code-Protect 112
Reading 107
Table Pointer
Boundaries Based on Operation 106
Table Pointer Boundaries 106
Table Reads and Table Writes 103
Write Sequence 109
Writing 109
Unexpected Termination 112
Write Verify 112
FSCM. *See* Fail-Safe Clock Monitor.

G

Getting Started Guidelines 29, 30
Connection Requirements 29
External Oscillator Pins 33
ICSP Pins 32
Power Supply Pins 30
Unused I/Os 33
Voltage Regulator Pins (VCAP/VDDCORE) 31
GOTO 456

H

Hardware Multiplier 113
8 x 8 Multiplication Algorithms 113
Operation 113
Performance Comparison (table) 113
High/Low-Voltage Detect 395
Applications 399
Associated Registers 400
Characteristics 507
Current Consumption 397
Effects of a Reset 400
Operation 396
During Sleep 400
Setup 397
Start-up Time 397
Typical Application 399

I

I/O Ports 131
Open-Drain Outputs 133
Pin Capabilities 132
TTL Input Buffer Option 133
I2C Mode 288
I2C Mode (MSSP)
Acknowledge Sequence Timing 316
Associated Registers 322
Baud Rate Generator 309
Bus Collision
During a Repeated Start Condition 320
During a Stop Condition 321
Clock Arbitration 311
Clock Stretching 303
10-Bit Slave Receive Mode (SEN = 1) 303
10-Bit Slave Transmit Mode 303
7-Bit Slave Receive Mode (SEN = 1) 303
7-Bit Slave Transmit Mode 303
Clock Synchronization and CKP bit 304
Effects of a Reset 317
General Call Address Support 307
I2C Clock Rate w/BRG 310
Master Mode 308
Operation 309
Reception 313
Repeated Start Condition Timing 312
Start Condition Timing 311
Transmission 313
Multi-Master Communication, Bus Collision
and Arbitration 317
Multi-Master Mode 317
Operation 293
Read/Write Bit Information (R/W Bit) 293, 296
Registers 288
Serial Clock (SCLx Pin) 296
Slave Mode 293
Addressing 293
Addressing Masking Modes
5-Bit 294
7-Bit 295
Reception 296
Transmission 296
Sleep Operation 317
Stop Condition Timing 316
INCF 456
INCFSZ 457
In-Circuit Debugger 434
In-Circuit Serial Programming (ICSP) 417, 434
Indexed Literal Offset Addressing
and Standard PIC18 Instructions 482
Indexed Literal Offset Mode 482
Indirect Addressing 98
INFSNZ 457
Initialization Conditions for All Registers 69–76
Instruction Cycle 82
Clocking Scheme 82
Flow/Pipelining 82
Instruction Set 435
ADDLW 441
ADDWF 441
ADDWF (Indexed Literal Offset Mode) 483
ADDWFC 442
ANDLW 442
ANDWF 443
BC 443
BCF 444
BN 444
BNC 445
BNN 445
BNOV 446
BNZ 446
BOV 449
BRA 447
BSF 447
BSF (Indexed Literal Offset Mode) 483
BTFSC 448
BTFSS 448
BTG 449

© 2011 Microchip Technology Inc.

BZ 450
CALL 450
CLRF 451
CLRWDT 451
COMF 452
CPFSEQ 452
CPFSGT 453
CPFSLT 453
DAW 454
DCFSNZ 455
DECF 454
DECFSZ 455
Extended Instructions 477
Considerations when Enabling 482
Syntax 477
Use with MPLAB IDE Tools 484
General Format 437
GOTO 456
INCF 456
INCFSZ 457
INFSNZ 457
IORLW 458
IORWF 458
LFSR 459
MOVF 459
MOVFF 460
MOVLB 460
MOVLW 461
MOVWF 461
MULLW 462
MULWF 462
NEGF 463
NOP 463
Opcode Field Descriptions 436
POP 464
PUSH 464
RCALL 465
RESET 465
RETFIE 466
RETLW 466
RETURN 467
RLCF 467
RLNCF 468
RRCF 468
RRNCF 469
SETF 469
SETF (Indexed Literal Offset Mode) 483
SLEEP 470
Standard Instructions 435
SUBFWB 470
SUBLW 471
SUBWF 471
SUBWFB 472
SWAPF 472
TBLRD 473
TBLWT 474
TSTFSZ 475
XORLW 475
XORWF 476
INTCON Registers 117–119
Inter-Integrated Circuit. *See* I^2C.
Frequency Drift. *See* INTOSC Frequency Drift.
Internal Oscillator
Internal Oscillator Block 38
Adjustment 39
OSCTUNE Register 39
Internal RC Oscillator
Use with WDT 427
Internal Voltage Reference Specifications 505
Internet Address 559
Interrupt Sources 417
A/D Conversion Complete 351
Capture Complete (ECCP) 248
Compare Complete (ECCP) 249
Interrupt-on-Change (RB7:RB4) 139
TMR0 Overflow 197
TMR1 Overflow 206
TMR3 Overflow 213, 221
TMR4 to PR4 Match 224
TMR4 to PR4 Match (PWM) 223
Interrupts 115
Control Bits 115
Control Registers. *See* INTCON Registers.
During, Context Saving 130
INTx Pin 130
PORTB, Interrupt-on-Change 130
RCON Register 129
TMR0 130
Interrupts, Flag Bits
Interrupt-on-Change (RB7:RB4) Flag (RBIF Bit) 139
INTOSC Frequency Drift 39
INTOSC, INTRC. *See* Internal Oscillator Block.
IORLW 458
IORWF 458
IPR Registers 126–128

L

LFSR 459
Low-Power Modes 47
Clock Transitions and Status Indicators 48
Deep Sleep Mode 54
and RTCC Peripheral 56
Brown-out Reset (DSBOR) 56
Fault Detection 56
Preparing for 54
Registers 57
Typical Sequence 56
Wake-up Sources 55
Watchdog Timer (DSWDT) 55
Exiting Idle and Sleep Modes 53
By Interrupt 53
By Reset 53
By WDT Time-out 53
Without an Oscillator Start-up Delay 54
Idle Modes 52
PRI_IDLE 52
RC_IDLE 53
SEC_IDLE 52
Multiple Sleep Commands 48
Run Modes 48
PRI_RUN 48
RC_RUN 50
SEC_RUN 48
Sleep Mode 51
Summary (table) 48
Ultra Low-Power Wake-up 60

M

Master Clear (MCLR) 65
Master Synchronous Serial Port (MSSP). *See* MSSP.
Memory Organization 77
  Data Memory 84
  Program Memory 77
  Return Address Stack 79
Memory Programming Requirements 504
Microchip Internet Web Site 559
MOVF 459
MOVFF 460
MOVLB 460
MOVLW 461
MOVSF 479
MOVSS 480
MOVWF 461
MPLAB MPASM Assembler, Linker, Librarian 486
MPLAB Integrated Development Environment
  Software 485
MPLAB PM3 Device Programmer 488
MPLAB REAL ICE In-Circuit Emulator System 487
MPLINK Object Linker/MPLIB Object Librarian 486
MSSP
  ACK Pulse 293, 296
  I^2C Mode. *See* I^2C Mode.
  Module Overview 269
  SPI Master/Slave Connection 274
  TMR4 Output for Clock Shift 224
MULLW 462
MULWF 462

N

NEGF 463
NOP 463

O

Oscillator Configurations 35
  Internal Oscillator Block 38
  Oscillator Control 35
  Oscillator Modes 35
  Oscillator Modes and USB Operation 36
  Oscillator Types 35
  Transitions 43
Oscillator Selection 417
Oscillator Settings for USB 40
  Configuration Options 41
Oscillator Start-up Timer (OST) 45
Oscillator Switching 42
Oscillator, Timer1 ..... 199, 205, 217
Oscillator, Timer3 213

P

P1A/P1B/P1C/P1D.*See* Enhanced
  Capture/Compare/PWM (ECCP). 253
Packaging
  Details 533
  Marking 531
Parallel Master Port (PMP) 169
  Application Examples 191
  Associated Registers 193
  Data Registers 176
  Master Port Modes 183
  Module Registers 170
  Slave Port Modes 178
Peripheral Pin Select (PPS) 150
Peripheral Pin Select Registers 155–168
PIE Registers 123–125
Pin Diagrams 5–7
Pin Functions
  AVDD1 28
  AVDD2 28
  AVSS1 28
  MCLR 16, 22
  OSC1/CLKI/RA7 ..... 16, 22
  OSC2/CLKO/RA6 ..... 16, 22
  RA0/AN0/C1INA/ULPWU/PMA6/RP0 23
  RA0/AN0/C1INA/ULPWU/RP0 17
  RA1/AN1/C2INA/PMA7/RP1 23
  RA1/AN1/C2INA/RP1 17
  RA2/AN2/VREF-/CVREF/C2INB 17, 23
  RA3/AN3/VREF+/C1INB 17, 23
  RA5/AN4/SS1/HLVDIN/RCV/RP2 ..... 17, 23
  RA6 ..... 17, 23
  RA7 ..... 17, 23
  RB0/AN12/INT0/RP3 ..... 18, 24
  RB1/AN10/PMBE/RTCCS/RP4 24
  RB1/AN10/RTCC/RP4 18
  RB2/AN8/CTED1/PMA3/VMO/REFO/RP5 24
  RB2/AN8/CTED1/VMO/REFO/RP5 18
  RB3/AN9/CTED2/PMA2/VPO/RP6 24
  RB3/AN9/CTED2/VPO/RP6 18
  RB4/KBI0/SCK1/SCL1/RP7 19
  RB4/PMA1/KBI0/SCK1/SCL1/RP7 25
  RB5/KBI1/SDI1/SDA1/RP8 19
  RB5/PMA0/KBI1/SDI1/SDA1/RP8 25
  RB6/KBI2/PGC/RP9 ..... 19, 25
  RB7/KBI3/PGD/RP10 ..... 19, 25
  RC0/T1OSO/T1CKI/RP11 ..... 20, 26
  RC1/T1OSI/UOE/RP12 ..... 20, 26
  RC2/AN11/CTPLS/RP13 ..... 20, 26
  RC4/D-/VM 20, 26
  RC5/D+/VP 20, 26
  RC6/PMA5/TX1/CK1/RP17 26
  RC6/TX1/CK1/RP17 20
  RC7/PMA4/RX1/DT1/SDO1/RP18 26
  RC7/RX1/DT1/SDO1/RP18 20
  RD0/PMD0/SCL2 27
  RD1/PMD1/SDA2 27
  RD2/PMD2/RP19 27
  RD3/PMD3/RP20 27
  RD4/PMD4/RP21 27
  RD5/PMD5/RP22 27
  RD6/PMD6/RP23 27
  RD7/PMD7/RP24 27
  RE0/AN5/PMRD 28
  RE1/AN6/PMWR 28
  RE2/AN7/PMCS 28
  VDD 21
  VDD1 28
  VDD2 28
  VDDCORE/VCAP 21, 28
  VSS1 ..... 21, 28
  VSS2 ..... 21, 28
  VUSB 21, 28
Pinout I/O Descriptions
  PIC18F2XJ50 (28-Pin) 16
  PIC18F4XJ50 (44-Pin) 22
PIR Registers 120
PLL Frequency Multiplier 38
POP 464

© 2011 Microchip Technology Inc.

POR. *See* Power-on Reset.
PORTA
Additional Pin Functions
Ultra Low-Power Wake-up 60
Associated Registers 138
LATA Register 136
PORTA Register 136
TRISA Register 136
PORTB
Associated Registers 142
LATB Register 139
PORTB Register 139
RB7:RB4 Interrupt-on-Change Flag (RBIF Bit) 139
TRISB Register 139
PORTC
Associated Registers 145
LATC Register 143
PORTC Register 143
TRISC Register 143
PORTD
Associated Registers 147
LATD Register 146
PORTD Register 146
TRISD Register 146
PORTE
Associated Registers 149
LATE Register 148
PORTE Register 148
TRISE Register 148
Power-Managed Modes
and EUSART Operation 327
and PWM Operation 267
and SPI Operation 278
Clock Sources 47
Entering 47
Selecting 47
Power-on Reset (POR) 65
Power-up Delays 45
Power-up Timer (PWRT) 45, 66
Time-out Sequence 66
Prescaler, Timer0 197
Prescaler, Timer2 (Timer4) 251
PRI_IDLE Mode 52
PRI_RUN Mode 48
Product Identification System 561
Program Counter 79
PCL, PCH and PCU Registers 79
PCLATH and PCLATU Registers 79
Program Memory
ALU
STATUS 96
Extended Instruction Set 99
Flash Configuration Words 78
Hard Memory Vectors 78
Instructions 83
Two-Word 83
Interrupt Vector 78
Look-up Tables 81
Memory Maps 77
Hard Vectors and Configuration Words 78
Reset Vector 78
Program Verification and Code Protection 433
Programming, Device Instructions 435
Pulse Steering 264
PUSH 464
PUSH and POP Instructions 80
PUSHL 480
PWM (CCP Module) 250
Associated Registers 252
Duty Cycle 250
Example Frequencies/Resolutions 251
Operation Setup 251
Period 250
PR2/PR4 Registers 250
TMR2 (TMR4) to PR2 (PR4) Match 250
TMR4 to PR4 Match 223
PWM (ECCP Module)
Effects of a Reset 267
Operation in Power-Managed Modes 267
Operation with Fail-Safe Clock Monitor 267
Pulse Steering 264
Steering Synchronization 266
PWM Mode. *See* Enhanced Capture/Compare/PWM 253

Q

Q Clock 251

R

RAM. *See* Data Memory.
RBIF Bit 139
RC_IDLE Mode 53
RC_RUN Mode 50
RCALL 465
RCON Register
Bit Status During Initialization 68
Reader Response 560
Real-Time Clock and Calendar (RTCC) 225
Operation 237
Registers 226
Reference Clock Output 44
Register File 86
Register File Summary 89,95
Registers
ADCON0 (A/D Control 0) 347
ADCON1 (A/D Control 1) 348
ALRMCFG (Alarm Configuration) 229
ALRMDAY (Alarm Day Value) 234
ALRMHR (Alarm Hours Value) 235
ALRMMIN (Alarm Minutes Value) 236
ALRMMNTH (Alarm Month Value) 234
ALRMRPT (Alarm Repeat Counter) 230
ALRMSEC (Alarm Seconds Value) 236
ALRMWD (Alarm Weekday Value) 235
ANCON0 (A/D Port Configuration 2) 349
ANCON1 (A/D Port Configuration 1) 349
Associated with Comparator 385
Associated with Program Flash Memory 112
BAUDCONx (Baud Rate Control) 326
BDnSTAT 367
BDnSTAT (Buffer Descriptor n Status, CPU Mode) 368
BDnSTAT (Buffer Descriptor n Status, SIE Mode) 369
BDnSTAT (SIE Mode) 369
Buffer Descriptors, Summary 371
CCPxCON (Enhanced Capture/Compare/PWM x Control) 246
CMSTAT (Comparator Status) 386
CMxCON (Comparator Control x) 386

CONFIG1H (Configuration 1 High) 420
CONFIG1L (Configuration 1 Low) 419
CONFIG2H (Configuration 2 High) 422
CONFIG2L (Configuration 2 Low) 421
CONFIG3H (Configuration 3 High) 424
CONFIG3L (Configuration 3 Low) 423
CONFIG4H (Configuration 4 High) 425
CONFIG4L (Configuration 4 Low) 424
CTMUCONH (CTMU Control High) 413
CTMUCONL (CTMU Control Low) 414
CTMUICON (CTMU Current Control) 415
CVRCON (Comparator Voltage Reference Control) 392
DAY (Day Value) 232
DEVID1 (Device ID 1) 425
DEVID2 (Device ID 2) 426
DMACON1 (DMA Control 1) 282
DMACON2 (DMA Control 2) 283
DSCONH (Deep Sleep Control High Byte) 57
DSCONL (Deep Sleep Control Low Byte) 57
DSGPR0 (Deep Sleep Persistent General Purpose 0) 58
DSGPR1 (Deep Sleep Persistent General Purpose 1) 58
DSWAKEH (Deep Sleep Wake High Byte) 59
DSWAKEL (Deep Sleep Wake Low Byte) 59
ECCPxAS (ECCPx Auto-Shutdown Control) 261
ECCPxDEL (Enhanced PWM Control) 264
EECON1 (EEPROM Control 1) 105
HLVDCON (High/Low-Voltage Detect Control) 395
HOURS (Hours Value) 233
I^2C Mode (MSSP) 288
INTCON (Interrupt Control) 117
INTCON2 (Interrupt Control 2) 118
INTCON3 (Interrupt Control 3) 119
IPR1 (Peripheral Interrupt Priority 1) 126
IPR2 (Peripheral Interrupt Priority 2) 127
IPR3 (Peripheral Interrupt Priority 3) 128
MINUTES (Minutes Value) 233
MONTH (Month Value) 231
ODCON1 (Peripheral Open-Drain Control 1) 134
ODCON2 (Peripheral Open-Drain Control 2) 134
ODCON3 (Peripheral Open-Drain Control 3) 135
OSCCON (Oscillator Control) 43
OSCTUNE (Oscillator Tuning) 40
PADCFG1 (Pad Configuration Control 1) 135
PADCFG1 (Pad Configuration) 228
Parallel Master Port 170
PIE1 (Peripheral Interrupt Enable 1) 123
PIE2 (Peripheral Interrupt Enable 2) 124
PIE3 (Peripheral Interrupt Enable 3) 125
PIR1 (Peripheral Interrupt Request (Flag) 1) 120
PIR2 (Peripheral Interrupt Request (Flag) 2) 121
PIR3 (Peripheral Interrupt Request (Flag) 3) 122
PMADDRH (Parallel Port Address High Byte, Master Modes) 177
PMADDRL (Parallel Port Address Low Byte, Master Modes) 177
PMCONH (Parallel Port Control High Byte) 170
PMCONL (Parallel Port Control Low Byte) 171
PMEH (Parallel Port Enable High Byte) 174
PMEL (Parallel Port Enable Low Byte) 174
PMMODEH (Parallel Port Mode High Byte) 172
PMMODEL (Parallel Port Mode Low Byte) 173
PMSTATH (Parallel Port Status High Byte) 175
PMSTATL (Parallel Port Status Low Byte) 175
PORTE 148
PPSCON (Peripheral Pin Select Input 0) 155
PSTRxCON (Pulse Steering Control) 265
RCON (Reset Control) 64, 129
RCSTAx (Receive Status and Control) 325
REFOCON (Reference Oscillator Control) 44
Reserved 231
RPINR1 (Peripheral Pin Select Input 1) 156
RPINR12 (Peripheral Pin Select Input 12) 158
RPINR13 (Peripheral Pin Select Input 13) 158
RPINR16 (Peripheral Pin Select Input 16) 159
RPINR17 (Peripheral Pin Select Input 17) 159
RPINR2 (Peripheral Pin Select Input 2) 156
RPINR21 (Peripheral Pin Select Input 21) 159
RPINR22 (Peripheral Pin Select Input 22) 160
RPINR23 (Peripheral Pin Select Input 23) 160
RPINR24 (Peripheral Pin Select Input 24) 160
RPINR3 (Peripheral Pin Select Input 3) 156
RPINR4 (Peripheral Pin Select Input 4) 157
RPINR6 (Peripheral Pin Select Input 6) 157
RPINR7 (Peripheral Pin Select Input 7) 157
RPINR8 (Peripheral Pin Select Input 8) 158
RPOR0 (Peripheral Pin Select Output 0) 161
RPOR1 (Peripheral Pin Select Output 1) 161
RPOR10 (Peripheral Pin Select Output 10) 164
RPOR11 (Peripheral Pin Select Output 11) 164
RPOR12 (Peripheral Pin Select Output 12) 165
RPOR13 (Peripheral Pin Select Output 13) 165
RPOR17 (Peripheral Pin Select Output 17) 165
RPOR18 (Peripheral Pin Select Output 18) 166
RPOR19 (Peripheral Pin Select Output 19) 166
RPOR2 (Peripheral Pin Select Output 2) 161
RPOR20 (Peripheral Pin Select Output 20) 166
RPOR21 (Peripheral Pin Select Output 21) 167
RPOR22 (Peripheral Pin Select Output 22) 167
RPOR23 (Peripheral Pin Select Output 23) 167
RPOR24 (Peripheral Pin Select Output 24) 168
RPOR3 (Peripheral Pin Select Output 3) 162
RPOR4 (Peripheral Pin Select Output 4) 162
RPOR5 (Peripheral Pin Select Output 5) 162
RPOR6 (Peripheral Pin Select Output 6) 163
RPOR7 (Peripheral Pin Select Output 7) 163
RPOR8 (Peripheral Pin Select Output 8) 163
RPOR9 (Peripheral Pin Select Output 9) 164
RTCCAL (RTCC Calibration) 228
RTCCFG (RTCC Configuration) 227
SECONDS (Seconds Value) 233
SPI Mode (MSSP) 271
SSPxCON1 (MSSPx Control 1, I^2C Mode) 290
SSPxCON1 (MSSPx Control 1, SPI Mode) 272
SSPxCON2 (MSSPx Control 2, I^2C Master Mode) 291
SSPxCON2 (MSSPx Control 2, I^2C Slave Mode) 292
SSPxMSK (I^2C Slave Address Mask) 292
SSPxSTAT (MSSPx Status, I^2C Mode) 289
SSPxSTAT (MSSPx Status, SPI Mode) 271
STATUS 96
STKPTR (Stack Pointer) 80
T0CON (Timer0 Control) 195
T1CON (Timer1 Control) 199
T1GCON (Timer1 Gate Control) 201
T2CON (Timer2 Control) 211
T3CON (Timer3 Control) 213
T3GCON (Timer3 Gate Control) 214

© 2011 Microchip Technology Inc.

T4CON (Timer4 Control) 223
TCLKCON (Timer Clock Control) 202, 215
TXSTAx (Transmit Status and Control) 324
UADDR 365
UCFG (USB Configuration) 361
UCON (USB Control) 359
UEIE (USB Error Interrupt Enable) 377
UEIR (USB Error Interrupt Status) 376
UEPn (USB Endpoint n Control) 364
UFRMH:UFRML 365
UIE (USB Interrupt Enable) 375
UIR (USB Interrupt Status) 373
USTAT (USB Status) 363
WDTCON (Watchdog Timer Control) 428
WKDY (Weekday Value) 232
YEAR (Year Value) 231
RESET 465
Reset 63
Brown-out Reset 65
Brown-out Reset (BOR) 63
Configuration Mismatch (CM) 63
Configuration Mismatch Reset 66
Deep Sleep 63
Fast Register Stack 81
MCLR 65
MCLR Reset, During Power-Managed Modes 63
MCLR Reset, Normal Operation 63
Power-on Reset 65
Power-on Reset (POR) 63
Power-up Timer 66
RESET Instruction 63
Stack Full Reset 63
Stack Underflow Reset 63
State of Registers 68
Watchdog Timer (WDT) Reset 63
Resets 417
Brown-out Reset (BOR) 417
Oscillator Start-up Timer (OST) 417
Power-on Reset (POR) 417
Power-up Timer (PWRT) 417
RETFIE 466
RETLW 466
RETURN 467
Return Address Stack 79
Associated Registers 79
Revision History 545
RLCF 467
RLNCF 468
RRCF 468
RRNCF 469
RTCC
Alarm 241
Configuring 241
Interrupt 242
Mask Settings 241
Alarm Value Registers (ALRMVAL) 234
Control Registers 227
Low-Power Modes 242
Operation
Calibration 240
Clock Source 238
Digit Carry Rules 238
General Functionality 239
Leap Year 239
Register Mapping 239
ALRMVAL 240
RTCVAL 240
Safety Window for Register Reads and Writes 239
Write Lock 239
Register Interface 237
Register Maps 243
Alarm Value 243
RTCC Control 243
RTCC Value 243
Reset 242
Device 242
Power-on Reset (POR) 242
Value Registers (RTCVAL) 231
RTCEN Bit Write 237

S

SCKx 270
SDIx 270
SDOx 270
SEC_IDLE Mode 52
SEC_RUN Mode 48
Serial Clock, SCKx 270
Serial Data In (SDIx) 270
Serial Data Out (SDOx) 270
Serial Peripheral Interface. *See* SPI Mode.
SETF 469
Shoot-Through Current 263
Slave Select (SSx) 270
SLEEP 470
Software Simulator (MPLAB SIM) 487
Special Event Trigger. *See* Compare (ECCP Mode).
Special Features of the CPU 417
SPI Mode (MSSP) 270
Associated Registers 279
Bus Mode Compatibility 278
Clock Speed, Interactions 278
DMA Module 280
I/O Pin Considerations 280
Idle and Sleep 280
RAM to RAM Copy 280
Registers 280
Effects of a Reset 278
Enabling SPI I/O 274
Master Mode 275
Master/Slave Connection 274
Operation 273
Open-Drain Output Option 273
Operation in Power-Managed Modes 278
Registers 271
Serial Clock 270
Serial Data In 270
Serial Data Out 270
Slave Mode 276
Slave Select 270
Slave Select Synchronization 276

SPI Clock 275
SSPxBUF Register 275
SSPxSR Register 275
Typical Connection 274
SSPOV 313
SSPOV Status Flag 313
SSPxSTAT Register
R/$\overline{W}$ Bit 293, 296
SSx 270
Stack Full/Underflow Resets 81
SUBFSR 481
SUBFWB 470
SUBLW 471
SUBULNK 481
SUBWF 471
SUBWFB 472
SWAPF 472

T

Table Pointer Operations (table) 106
Table Reads/Table Writes 81
TAD 353
TBLRD 473
TBLWT 474
Timer0 195
Associated Registers 197
Operation 196
Overflow Interrupt 197
Prescaler 197
Switching Assignment 197
Prescaler Assignment (PSA Bit) 197
Prescaler Select (T0PS2:T0PS0 Bits) 197
Reads and Writes in 16-Bit Mode 196
Source Edge Select (T0SE Bit) 196
Source Select (T0CS Bit) 196
Timer1 199
16-Bit Read/Write Mode 205
Associated Registers 210
Clock Source Selection 203
Gate 207
Interrupt 206
Operation 203
Oscillator 199, 205
Layout Considerations 206
Resetting, Using the ECCP Special Event Trigger 207
TMR1H Register 199
TMR1L Register 199
Use as a Clock Source 206
Timer2 211
Associated Registers 212
Interrupt 212
Operation 211
Output 212
Timer3 213
16-Bit Read/Write Mode 217
Associated Registers 221
Gate 217
Operation 216
Oscillator 213, 217
Overflow Interrupt 213, 221
Special Event Trigger (ECCP) 221
TMR3H Register 213
TMR3L Register 213
Timer4 223
Associated Registers 224
Interrupt 224
MSSP Clock Shift 224
Operation 223
Output 224
Postscaler. *See* Postscaler, Timer4.
PR4 Register 223
Prescaler. *See* Prescaler, Timer4.
TMR4 Register 223
TMR4 to PR4 Match Interrupt 223, 224
Timing Diagrams
A/D Conversion 529
Asynchronous Reception 337
Asynchronous Transmission 334
Asynchronous Transmission (Back-to-Back) 334
Automatic Baud Rate Calculation 332
Auto-Wake-up Bit (WUE) During Normal Operation 339
Auto-Wake-up Bit (WUE) During Sleep 339
Baud Rate Generator with Clock Arbitration 311
BRG Overflow Sequence 332
BRG Reset Due to SDAx Arbitration During Start Condition 319
Bus Collision During a Repeated Start Condition (Case 1) 320
Bus Collision During a Repeated Start Condition (Case 2) 320
Bus Collision During a Start Condition (SCLx = 0) 319
Bus Collision During a Stop Condition (Case 1) 321
Bus Collision During a Stop Condition (Case 2) 321
Bus Collision During Start Condition (SDAx Only) 318
Bus Collision for Transmit and Acknowledge 317
CLKO and I/O 512
Clock Synchronization 304
Clock/Instruction Cycle 82
Enhanced Capture/Compare/PWM 516
EUSARTx Synchronous Receive (Master/Slave) 528
EUSARTx Synchronous Transmission (Master/Slave) 528
Example SPI Master Mode (CKE = 0) 520
Example SPI Master Mode (CKE = 1) 521
Example SPI Slave Mode (CKE = 0) 522
Example SPI Slave Mode (CKE = 1) 523
External Clock 510
Fail-Safe Clock Monitor 432
First Start Bit 311
Full-Bridge PWM Output 258
Half-Bridge PWM Output 256, 263
High/Low-Voltage Detect Characteristics 507
High-Voltage Detect (VDIRMAG = 1) 399
I2C Bus Data 524
I2C Acknowledge Sequence 316
I2C Bus Start/Stop Bits 524
I2C Master Mode (7 or 10-Bit Transmission) 314
I2C Master Mode (7-Bit Reception) 315
I2C Slave Mode (10-Bit Reception, SEN = 0, ADMSK = 01001) 300
I2C Slave Mode (10-Bit Reception, SEN = 0) 301
I2C Slave Mode (10-Bit Reception, SEN = 1) 306
I2C Slave Mode (10-Bit Transmission) 302

© 2011 Microchip Technology Inc.

I²C Slave Mode (7-Bit Reception, SEN = 0, ADMSK = 01011) 298
I²C Slave Mode (7-Bit Reception, SEN = 0) 297
I²C Slave Mode (7-Bit Reception, SEN = 1) 305
I²C Slave Mode (7-Bit Transmission) 299
I²C Slave Mode General Call Address Sequence (7 or 10-Bit Addressing Mode) 307
I²C Stop Condition Receive or Transmit Mode 316
Low-Voltage Detect (VDIRMAG = 0) 398
MSSPx I²C Bus Data 526
MSSPx I²C Bus Start/Stop Bits 526
Parallel Master Port Read 517
Parallel Master Port Write 518
Parallel Slave Port 519
Parallel Slave Port Read 179, 181
Parallel Slave Port Write 179, 182
PWM Auto-Shutdown with Auto-Restart Enabled 262
PWM Auto-Shutdown with Firmware Restart 262
PWM Direction Change 259
PWM Direction Change at Near 100% Duty Cycle 260
PWM Output 250
PWM Output (Active-High) 254
PWM Output (Active-Low) 255
Read and Write, 8-Bit Data, Demultiplexed Address 186
Read, 16-Bit Data, Demultiplexed Address 189
Read, 16-Bit Multiplexed Data, Fully Multiplexed 16-Bit Address 190
Read, 16-Bit Multiplexed Data, Partially Multiplexed Address 189
Read, 8-Bit Data, Fully Multiplexed 16-Bit Address 188
Read, 8-Bit Data, Partially Multiplexed Address 186
Read, 8-Bit Data, Partially Multiplexed Address, Enable Strobe 187
Read, 8-Bit Data, Wait States Enabled, Partially Multiplexed Address 186
Repeated Start Condition 312
Reset, Watchdog Timer (WDT), Oscillator Start-up Timer (OST) and Power-up Timer (PWRT) 513
Send Break Character Sequence 340
Slave Synchronization 276
Slow Rise Time (MCLR Tied to VDD, VDD Rise > TPWRT) 67
SPI Mode (Master Mode) 275
SPI Mode (Slave Mode, CKE = 0) 277
SPI Mode (Slave Mode, CKE = 1) 277
Steering Event at Beginning of Instruction (STRSYNC = 1) 266
Steering Event at End of Instruction (STRSYNC = 0) 266
Synchronous Reception (Master Mode, SREN) 343
Synchronous Transmission 341
Synchronous Transmission (Through TXEN) 342
Time-out Sequence on Power-up (MCLR Not Tied to VDD), Case 1 67
Time-out Sequence on Power-up (MCLR Not Tied to VDD), Case 2 67
Time-out Sequence on Power-up (MCLR Tied to VDD, VDD Rise < TPWRT) 66
Timer Pulse Generation 242
Timer0 and Timer1 External Clock 515
Timer1 Gate Count Enable Mode 207
Timer1 Gate Single Pulse Mode 209
Timer1 Gate Single Pulse/Toggle Combined Mode 210
Timer1 Gate Toggle Mode 208
Timer3 Gate Count Enable Mode 217
Timer3 Gate Single Pulse Mode 219
Timer3 Gate Single Pulse/Toggle Combined Mode 220
Timer3 Gate Toggle Mode 218
Transition for Entry to Idle Mode 52
Transition for Entry to SEC_RUN Mode 49
Transition for Entry to Sleep Mode 51
Transition for Two-Speed Start-up (INTRC to HSPLL) 431
Transition for Wake From Idle to Run Mode 53
Transition for Wake From Sleep (HSPLL) 51
Transition From RC_RUN Mode to PRI_RUN Mode 50
Transition From SEC_RUN Mode to PRI_RUN Mode (HSPLL) 49
Transition to RC_RUN Mode 50
USB Signal 530
Write, 16-Bit Data, Demultiplexed Address 189
Write, 16-Bit Multiplexed Data, Fully Multiplexed 16-Bit Address 190
Write, 16-Bit Multiplexed Data, Partially Multiplexed Address 190
Write, 8-Bit Data, Fully Multiplexed 16-Bit Address 188
Write, 8-Bit Data, Partially Multiplexed Address 187
Write, 8-Bit Data, Partially Multiplexed Address, Enable Strobe 188
Write, 8-Bit Data, Wait States Enabled, Partially Multiplexed Address 187
Timing Diagrams and Specifications
AC Characteristics Internal RC Accuracy 511
CLKO and I/O Requirements 512
Enhanced Capture/Compare/PWM Requirements 516
EUSARTx Synchronous Receive Requirements 528
EUSARTx Synchronous Transmission Requirements 528
Example SPI Mode Requirements (Master Mode, CKE = 0) 520
Example SPI Mode Requirements (Master Mode, CKE = 1) 521
Example SPI Mode Requirements (Slave Mode, CKE = 0) 522
Example SPI Slave Mode Requirements (CKE = 1) 523
External Clock Requirements 510
I²C Bus Data Requirements (Slave Mode) 525
I²C Bus Start/Stop Bits Requirements (Slave Mode) 524
Low-Power Wake-up Time 514
MSSPx I²C Bus Data Requirements 527
MSSPx I²C Bus Start/Stop Bits Requirements 526
Parallel Master Port Read Requirements 517
Parallel Master Port Write Requirements 518
Parallel Slave Port Requirements 519
PLL Clock 511
Reset, Watchdog Timer, Oscillator Start-up Timer, Power-up Timer and Brown-out Reset Requirements 513
Timer0 and Timer1 External Clock Requirements 515

USB Full-Speed Requirements 530
USB Low-Speed Requirements 530
TSTFSZ 475
Two-Speed Start-up 417, 431
Two-Word Instructions
Example Cases 83
TXSTAx Register
BRGH Bit 327

U

ULPWU Specifications 505
Ultra Low-Power Wake-up 60
Universal Serial Bus 357
Address Register (UADDR) 365
Associated Registers 381
Buffer Descriptor Table 366
Buffer Descriptors 366
Address Validation 369
Assignment in Different Buffering Modes 371
BDnSTAT Register (CPU Mode) 367
BDnSTAT Register (SIE Mode) 369
Byte Count 369
Example 366
Memory Map 370
Ownership 366
Ping-Pong Buffering 370
Register Summary 371
Status and Configuration 366
Endpoint Control 364
External Pull-up Resistors 362
Eye Pattern Test Enable 362
Firmware and Drivers 381
Frame Number Registers 365
Internal Pull-up Resistors 362
Internal Transceiver 360
Interrupts 372
and USB Transactions 372
Oscillator Requirements 381
Overview 357, 382
Class Specifications and Drivers 383
Descriptors 383
Enumeration 383
Frames 382
Layered Framework 382
Power 382
Speed 383
Transfer Types 382
Ping-Pong Buffer Configuration 362
Power Modes 378
Bus Power Only 378
Dual Power with Self-Power Dominance 378
Self-Power Only 378
Transceiver Current Consumption 379
RAM 365
Memory Map 365
Status and Control 358
UFRMH:UFRML Registers 365
USB Specifications 506
USB. *See* Universal Serial Bus.

V

Voltage Reference Specifications 505
Voltage Regulator (On-Chip) 429
Operation in Sleep Mode 430

W

Watchdog Timer (WDT) 417, 427
Associated Registers 428
Control Register 427
During Oscillator Failure 432
Programming Considerations 427
WCOL 311, 312, 313, 316
WCOL Status Flag 311, 312, 313, 316
WWW Address 559
WWW, On-Line Support 9

X

XORLW 475
XORWF 476

© 2011 Microchip Technology Inc.

THE MICROCHIP WEB SITE

Microchip provides online support via our WWW site at www.microchip.com. This web site is used as a means to make files and information easily available to customers. Accessible by using your favorite Internet browser, the web site contains the following information:

- **Product Support** – Data sheets and errata, application notes and sample programs, design resources, user's guides and hardware support documents, latest software releases and archived software
- **General Technical Support** – Frequently Asked Questions (FAQ), technical support requests, online discussion groups, Microchip consultant program member listing
- **Business of Microchip** – Product selector and ordering guides, latest Microchip press releases, listing of seminars and events, listings of Microchip sales offices, distributors and factory representatives

CUSTOMER CHANGE NOTIFICATION SERVICE

Microchip's customer notification service helps keep customers current on Microchip products. Subscribers will receive e-mail notification whenever there are changes, updates, revisions or errata related to a specified product family or development tool of interest.

To register, access the Microchip web site at www.microchip.com. Under "Support", click on "Customer Change Notification" and follow the registration instructions.

CUSTOMER SUPPORT

Users of Microchip products can receive assistance through several channels:

- Distributor or Representative
- Local Sales Office
- Field Application Engineer (FAE)
- Technical Support
- Development Systems Information Line

Customers should contact their distributor, representative or field application engineer (FAE) for support. Local sales offices are also available to help customers. A listing of sales offices and locations is included in the back of this document.

Technical support is available through the web site at: http://microchip.com/support

READER RESPONSE

It is our intention to provide you with the best documentation possible to ensure successful use of your Microchip product. If you wish to provide your comments on organization, clarity, subject matter, and ways in which our documentation can better serve you, please FAX your comments to the Technical Publications Manager at (480) 792-4150.

Please list the following information, and use this outline to provide us with your comments about this document.

TO: Technical Publications Manager
RE: Reader Response

Total Pages Sent _____

From: Name _____

Company _____

Address _____

City / State / ZIP / Country _____

Telephone: (_____) _____ - _____ FAX: (_____) _____ - _____

Application (optional):

Would you like a reply? ___ Y ___ N

Device: PIC18F46J50 Family Literature Number: DS39931D

Questions:

1. What are the best features of this document?

2. How does this document meet your hardware and software development needs?

3. Do you find the organization of this document easy to follow? If not, why?

4. What additions to the document do you think would enhance the structure and subject?

5. What deletions from the document could be made without affecting the overall usefulness?

6. Is there any incorrect or misleading information (what and where)?

7. How would you improve this document?

© 2011 Microchip Technology Inc.

PRODUCT IDENTIFICATION SYSTEM

To order or obtain information, e.g., on pricing or delivery, refer to the factory or the listed sales office.

PART NO.	X	/XX	XXX
Device	Temperature Range	Package	Pattern

Device	PIC18F24J50 PIC18F25J50 PIC18F26J50 PIC18F44J50 PIC18F45J50 PIC18F46J50 PIC18LF24J50 PIC18LF25J50 PIC18LF26J50 PIC18LF44J50 PIC18LF45J50 PIC18LF46J50
Temperature Range	I = -40°C to +85°C (Industrial)
Package	SP = Skinny PDIP SS = SSOP SO = SOIC ML = QFN PT = TQFP (Thin Quad Flatpack)
Pattern	QTP, SQTP, Code or Special Requirements (blank otherwise)

Examples:

a) PIC18F46J50-I/PT 301 = Industrial temp., TQFP package, QTP pattern #301.

b) PIC18F46J50T-I/PT = Tape and reel, Industrial temp., TQFP package.

Worldwide Sales and Service

AMERICAS

Corporate Office
2355 West Chandler Blvd.
Chandler, AZ 85224-6199
Tel: 480-792-7200
Fax: 480-792-7277
Technical Support:
http://www.microchip.com/support
Web Address:
www.microchip.com

Atlanta
Duluth, GA
Tel: 678-957-9614
Fax: 678-957-1455

Boston
Westborough, MA
Tel: 774-760-0087
Fax: 774-760-0088

Chicago
Itasca, IL
Tel: 630-285-0071
Fax: 630-285-0075

Cleveland
Independence, OH
Tel: 216-447-0464
Fax: 216-447-0643

Dallas
Addison, TX
Tel: 972-818-7423
Fax: 972-818-2924

Detroit
Farmington Hills, MI
Tel: 248-538-2250
Fax: 248-538-2260

Indianapolis
Noblesville, IN
Tel: 317-773-8323
Fax: 317-773-5453

Los Angeles
Mission Viejo, CA
Tel: 949-462-9523
Fax: 949-462-9608

Santa Clara
Santa Clara, CA
Tel: 408-961-6444
Fax: 408-961-6445

Toronto
Mississauga, Ontario,
Canada
Tel: 905-673-0699
Fax: 905-673-6509

ASIA/PACIFIC

Asia Pacific Office
Suites 3707-14, 37th Floor
Tower 6, The Gateway
Harbour City, Kowloon
Hong Kong
Tel: 852-2401-1200
Fax: 852-2401-3431

Australia - Sydney
Tel: 61-2-9868-6733
Fax: 61-2-9868-6755

China - Beijing
Tel: 86-10-8528-2100
Fax: 86-10-8528-2104

China - Chengdu
Tel: 86-28-8665-5511
Fax: 86-28-8665-7889

China - Chongqing
Tel: 86-23-8980-9588
Fax: 86-23-8980-9500

China - Hong Kong SAR
Tel: 852-2401-1200
Fax: 852-2401-3431

China - Nanjing
Tel: 86-25-8473-2460
Fax: 86-25-8473-2470

China - Qingdao
Tel: 86-532-8502-7355
Fax: 86-532-8502-7205

China - Shanghai
Tel: 86-21-5407-5533
Fax: 86-21-5407-5066

China - Shenyang
Tel: 86-24-2334-2829
Fax: 86-24-2334-2393

China - Shenzhen
Tel: 86-755-8203-2660
Fax: 86-755-8203-1760

China - Wuhan
Tel: 86-27-5980-5300
Fax: 86-27-5980-5118

China - Xian
Tel: 86-29-8833-7252
Fax: 86-29-8833-7256

China - Xiamen
Tel: 86-592-2388138
Fax: 86-592-2388130

China - Zhuhai
Tel: 86-756-3210040
Fax: 86-756-3210049

ASIA/PACIFIC

India - Bangalore
Tel: 91-80-3090-4444
Fax: 91-80-3090-4123

India - New Delhi
Tel: 91-11-4160-8631
Fax: 91-11-4160-8632

India - Pune
Tel: 91-20-2566-1512
Fax: 91-20-2566-1513

Japan - Yokohama
Tel: 81-45-471- 6166
Fax: 81-45-471-6122

Korea - Daegu
Tel: 82-53-744-4301
Fax: 82-53-744-4302

Korea - Seoul
Tel: 82-2-554-7200
Fax: 82-2-558-5932 or
82-2-558-5934

Malaysia - Kuala Lumpur
Tel: 60-3-6201-9857
Fax: 60-3-6201-9859

Malaysia - Penang
Tel: 60-4-227-8870
Fax: 60-4-227-4068

Philippines - Manila
Tel: 63-2-634-9065
Fax: 63-2-634-9069

Singapore
Tel: 65-6334-8870
Fax: 65-6334-8850

Taiwan - Hsin Chu
Tel: 886-3-6578-300
Fax: 886-3-6578-370

Taiwan - Kaohsiung
Tel: 886-7-213-7830
Fax: 886-7-330-9305

Taiwan - Taipei
Tel: 886-2-2500-6610
Fax: 886-2-2508-0102

Thailand - Bangkok
Tel: 66-2-694-1351
Fax: 66-2-694-1350

EUROPE

Austria - Wels
Tel: 43-7242-2244-39
Fax: 43-7242-2244-393

Denmark - Copenhagen
Tel: 45-4450-2828
Fax: 45-4485-2829

France - Paris
Tel: 33-1-69-53-63-20
Fax: 33-1-69-30-90-79

Germany - Munich
Tel: 49-89-627-144-0
Fax: 49-89-627-144-44

Italy - Milan
Tel: 39-0331-742611
Fax: 39-0331-466781

Netherlands - Drunen
Tel: 31-416-690399
Fax: 31-416-690340

Spain - Madrid
Tel: 34-91-708-08-90
Fax: 34-91-708-08-91

UK - Wokingham
Tel: 44-118-921-5869
Fax: 44-118-921-5820

02/18/11

© 2011 Microchip Technology Inc.