

PIC16(L)F1507
Data Sheet

20-Pin Flash, 8-Bit Microcontrollers

© 2011 Microchip Technology Inc.

Note the following details of the code protection feature on Microchip devices:

- Microchip products meet the specification contained in their particular Microchip Data Sheet.
- Microchip believes that its family of products is one of the most secure families of its kind on the market today, when used in the intended manner and under normal conditions.
- There are dishonest and possibly illegal methods used to breach the code protection feature. All of these methods, to our knowledge, require using the Microchip products in a manner outside the operating specifications contained in Microchip's Data Sheets. Most likely, the person doing so is engaged in theft of intellectual property.
- Microchip is willing to work with the customer who is concerned about the integrity of their code.
- Neither Microchip nor any other semiconductor manufacturer can guarantee the security of their code. Code protection does not mean that we are guaranteeing the product as "unbreakable."

Code protection is constantly evolving. We at Microchip are committed to continuously improving the code protection features of our products. Attempts to break Microchip's code protection feature may be a violation of the Digital Millennium Copyright Act. If such acts allow unauthorized access to your software or other copyrighted work, you may have a right to sue for relief under that Act.

Information contained in this publication regarding device applications and the like is provided only for your convenience and may be superseded by updates. It is your responsibility to ensure that your application meets with your specifications. MICROCHIP MAKES NO REPRESENTATIONS OR WARRANTIES OF ANY KIND WHETHER EXPRESS OR IMPLIED, WRITTEN OR ORAL, STATUTORY OR OTHERWISE, RELATED TO THE INFORMATION, INCLUDING BUT NOT LIMITED TO ITS CONDITION, QUALITY, PERFORMANCE, MERCHANTABILITY OR FITNESS FOR PURPOSE**.** Microchip disclaims all liability arising from this information and its use. Use of Microchip devices in life support and/or safety applications is entirely at the buyer's risk, and the buyer agrees to defend, indemnify and hold harmless Microchip from any and all damages, claims, suits, or expenses resulting from such use. No licenses are conveyed, implicitly or otherwise, under any Microchip intellectual property rights.

Trademarks

The Microchip name and logo, the Microchip logo, dsPIC, KEELOQ, KEELOQ logo, MPLAB, PIC, PICmicro, PICSTART, PIC^{32} logo, rfPIC and UNI/O are registered trademarks of Microchip Technology Incorporated in the U.S.A. and other countries.

FilterLab, Hampshire, HI-TECH C, Linear Active Thermistor, MXDEV, MXLAB, SEEVAL and The Embedded Control Solutions Company are registered trademarks of Microchip Technology Incorporated in the U.S.A.

Analog-for-the-Digital Age, Application Maestro, chipKIT, chipKIT logo, CodeGuard, dsPICDEM, dsPICDEM.net, dsPICworks, dsSPEAK, ECAN, ECONOMONITOR, FanSense, HI-TIDE, In-Circuit Serial Programming, ICSP, Mindi, MiWi, MPASM, MPLAB Certified logo, MPLIB, MPLINK, mTouch, Omniscient Code Generation, PICC, PICC-18, PICDEM, PICDEM.net, PICkit, PICtail, REAL ICE, rfLAB, Select Mode, Total Endurance, TSHARC, UniWinDriver, WiperLock and ZENA are trademarks of Microchip Technology Incorporated in the U.S.A. and other countries.

SQTP is a service mark of Microchip Technology Incorporated in the U.S.A.

All other trademarks mentioned herein are property of their respective companies.

© 2011, Microchip Technology Incorporated, Printed in the U.S.A., All Rights Reserved.

Printed on recycled paper.

ISBN: 978-1-61341-342-5

QUALITY MANAGEMENT SYSTEM
CERTIFIED BY DNV
ISO/TS 16949:2009

Microchip received ISO/TS-16949:2002 certification for its worldwide headquarters, design and wafer fabrication facilities in Chandler and Tempe, Arizona; Gresham, Oregon and design centers in California and India. The Company's quality system processes and procedures are for its PIC® MCUs and dsPIC® DSCs, KEELOQ® code hopping devices, Serial EEPROMs, microperipherals, nonvolatile memory and analog products. In addition, Microchip's quality system for the design and manufacture of development systems is ISO 9001:2000 certified.

PIC16(L)F1507

20-Pin Flash, 8-Bit Microcontrollers

High-Performance RISC CPU:

- C Compiler Optimized Architecture
- Only 49 Instructions
- Up to 3.5 Kbytes Linear Program Memory Addressing
- Up to 128 bytes Linear Data Memory Addressing
- Operating Speed:
  - DC – 20 MHz clock input
  - DC – 125 ns instruction cycle
- Interrupt Capability with Automatic Context Saving
- 16-Level Deep Hardware Stack with Optional Overflow/Underflow Reset
- Direct, Indirect and Relative Addressing modes:
  - Two full 16-bit File Select Registers (FSRs)
  - FSRs can read program and data memory

Flexible Oscillator Structure:

- 16 MHz Internal Oscillator Block:
  - Factory calibrated to ± 1%, typical
  - Software selectable frequency range from 16 MHz to 31 kHz
- 31 kHz Low-Power Internal Oscillator
- Three External Clock modes up to 20 MHz

Special Microcontroller Features:

- Operating Voltage Range:
  - 1.8V to 3.6V (PIC16LF1507)
  - 2.3V to 5.5V (PIC16F1507)
- Self-Programmable under Software Control
- Power-on Reset (POR)
- Power-up Timer (PWRT)
- Programmable Low-Power Brown-Out Reset (LPBOR)
- Extended Watch-Dog Timer (WDT):
  - Programmable period from 1 ms to 256s
- Programmable Code Protection
- In-Circuit Serial Programming™ (ICSP™) via two pins
- Enhanced Low-Voltage Programming (LVP)
- Power-Saving Sleep mode

Low-Power Features (PIC16LF1507):

- Standby Current:
  - 20 nA @ 1.8V, typical
- Operating Current:
  - 30 μA per MHz @ 1.8V, typical
- Low-Power Watchdog Timer Current:
  - 300 nA @ 1.8V, typical

Analog Features:

- Analog-to-Digital Converter (ADC):
  - 10-bit resolution
  - Up to 12 channels
  - Auto acquisition capability
  - Conversion available during Sleep
  - FVR available as channel
- Voltage Reference module:
  - Fixed Voltage Reference (FVR) with 1.024V, 2.048V and 4.096V output levels

Peripheral Features:

- 17 I/O Pins and 1 Input-only Pin:
  - High current sink/source 25 mA/25 mA
  - Individually programmable weak pull-ups
  - Individually programmable interrupt-on-change (IOC) pins
- Timer0: 8-Bit Timer/Counter with 8-Bit Programmable Prescaler
- Enhanced Timer1:
  - 16-bit timer/counter with prescaler
  - External Gate Input mode
- Timer2: 8-Bit Timer/Counter with 8-Bit Period Register, Prescaler and Postscaler
- Four 10-bit PWM modules
- Two Configurable Logic Cell (CLC) modules:
  - 22 individual input sources
  - Four inputs and 16 selectable input sources per module
  - Software selectable logic functions including: AND/OR/XOR/D Flop/D Latch/SR/JK
  - External and internal inputs/outputs
  - Operation while in Sleep
- Numerically Controlled Oscillator (NCO):
  - 20-bit Accumulator
  - 16-bit Increment
  - Linear frequency control
  - High-speed clock input
  - Selectable Output modes
    - Fixed Duty Cycle (FDC) mode
    - Pulse Frequency (PF) mode
- Complementary Waveform Generator (CWG):
  - 6 selectable signal sources
  - Selectable falling and rising edge dead-band control
  - Polarity control
  - 2 auto-shutdown sources
  - Multiple input sources: PWM, CLC, NCO

PIC16(L)F1507 Family Types

Device	Program Memory Flash (words)	SRAM (bytes)	I/O(1)	10-bit A/D (ch)	Timers 8/16-bit	PWM	CWG	CLC	NCO
PIC16F1507 PIC16LF1507	2048	128	18	12	2/1	4	1	2	1

Note 1: One pin is input-only.

FIGURE 1: 20-PIN PDIP, SOIC, SSOP PACKAGE DIAGRAM FOR PIC16(L)F1507

PDIP, SOIC, SSOP

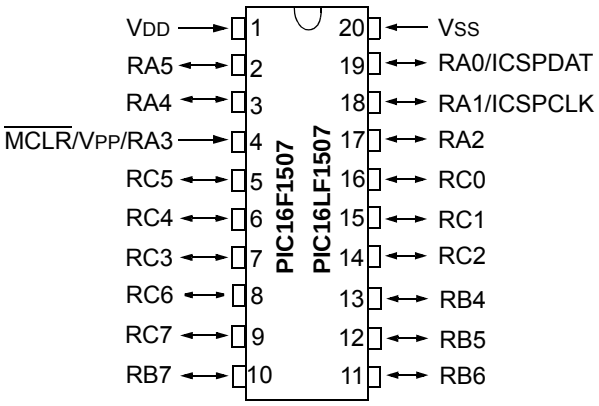

Note: See Table 1 for location of all peripheral functions.

FIGURE 2: 20-PIN QFN PACKAGE DIAGRAM FOR PIC16(L)F1507

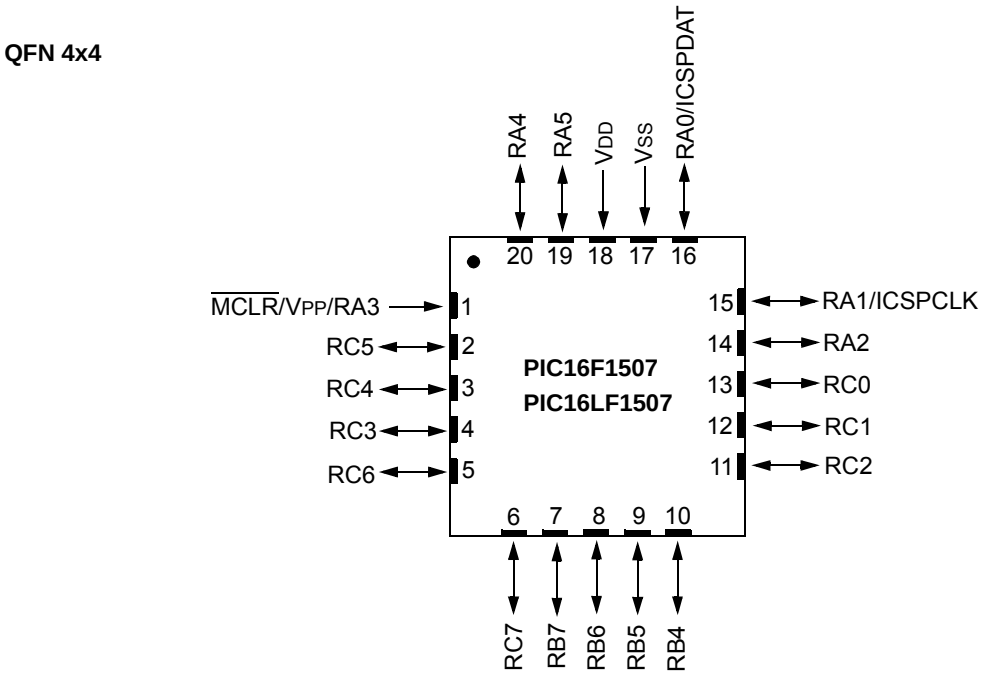

Note: See Table 1 for location of all peripheral functions.

 © 2011 Microchip Technology Inc.

TABLE 1: 20-PIN ALLOCATION TABLE (PIC16(L)F1507)

I/O	20-Pin PDIP/SOIC/SSOP	20-Pin QFN	A/D	Reference	CWG	NCO	CLC	Timers	PWM	Interrupt	Pull-up	Basic
RA0	19	16	AN0	—	—	—	—	—	—	IOC	Y	ICSPDAT
RA1	18	15	AN1	VREF+	—	—	—	—	—	IOC	Y	ICSPCLK
RA2	17	14	AN2	—	$\overline{\text{CWG1FLT}}$	—	CLC1(1)	T0CKI	PWM3	INT/ IOC	Y	—
RA3	4	1	—	—	—	—	CLC1IN0	—	—	IOC	Y	$\overline{\text{MCLR}}$ VPP
RA4	3	20	AN3	—	—	—	—	$\overline{\text{T1G}}$	—	IOC	Y	CLKOUT
RA5	2	19	—	—	—	NCO1CLK	—	T1CKI	—	IOC	Y	CLKIN
RB4	13	10	AN10	—	—	—	—	—	—	IOC	Y	—
RB5	12	9	AN11	—	—	—	—	—	—	IOC	Y	—
RB6	11	8	—	—	—	—	—	—	—	IOC	Y	—
RB7	10	7	—	—	—	—	—	—	—	IOC	Y	—
RC0	16	13	AN4	—	—	—	CLC2	—	—	—	—	—
RC1	15	12	AN5	—	—	NCO1(1)	—	—	PWM4	—	—	—
RC2	14	11	AN6	—	—	—	—	—	—	—	—	—
RC3	7	4	AN7	—	—	—	CLC2IN0	—	PWM2	—	—	—
RC4	6	3	—	—	CWG1B	—	CLC2IN1	—	—	—	—	—
RC5	5	2	—	—	CWG1A	—	CLC1(2)	—	PWM1	—	—	—
RC6	8	5	AN8	—	—	NCO1(2)	—	—	—	—	—	—
RC7	9	6	AN9	—	—	—	CLC1IN1	—	—	—	—	—
VDD	1	18	—	—	—	—	—	—	—	—	—	VDD
VSS	20	17	—	—	—	—	—	—	—	—	—	VSS

Note 1: Default location for peripheral pin function. Alternate location can be selected using the APFCON register.
2: Alternate location for peripheral pin function selected by the APFCON register.

Table of Contents

1.0 Device Overview 9
2.0.Enhanced Mid-Range CPU 13
3.0 Memory Organization 15
4.0 Device Configuration 39
5.0 Oscillator Module (With Fail-Safe Clock Monitor) 45
6.0 Resets 53
7.0 Interrupts 61
8.0 Power-Down Mode (Sleep) 75
9.0 Watchdog Timer 79
10.0 Flash Program Memory Control 83
11.0 I/O Ports 99
12.0 Interrupt-On-Change 111
13.0 Fixed Voltage Reference (FVR) 117
14.0 Temperature Indicator Module 119
15.0 Analog-to-Digital Converter (ADC) Module 121
16.0 Timer0 Module 135
17.0 Timer1 Module with Gate Control 139
18.0 Timer2 Modules 151
19.0 PWM Modules 155
20.0 Configurable Logic Cell (CLC) 161
21.0 Numerically Controlled Oscillator (NCO) Module 177
22.0 Complementary Waveform Generator (CWG) Module 187
23.0 In-Circuit Serial Programming™ (ICSP™) 203
24.0 Instruction Set Summary 207
25.0 Electrical Specifications 221
26.0 DC and AC Characteristics Graphs and Charts 239
27.0 Development Support 241
28.0 Packaging Information 245
Appendix A: Data Sheet Revision History 255
Index 257
The Microchip Web Site 263
Customer Change Notification Service 263
Customer Support 263
Reader Response 264
Product Identification System 265
Worldwide Sales and Service 266

 © 2011 Microchip Technology Inc.

NOTES:

1.0 DEVICE OVERVIEW

The PIC16(L)F1507 are described within this data sheet. They are available in 20 pin packages. Figure 1-1 shows a block diagram of the PIC16(L)F1507 devices. Tables 1-2 shows the pinout descriptions.

Reference Table 1-1 for peripherals available per device.

TABLE 1-1: DEVICE PERIPHERAL SUMMARY

Peripheral		PIC16F1507	PIC16LF1507
Analog-to-Digital Converter (ADC)		●	●
Complementary Wave Generator (CWG)		●	●
Fixed Voltage Reference (FVR)		●	●
Numerically Controlled Oscillator (NCO)		●	●
Temperature Indicator		●	●
Configurable Logic Cell (CLC)			
	CLC1	●	●
	CLC2	●	●
PWM Modules			
	PWM1	●	●
	PWM2	●	●
	PWM3	●	●
	PWM4	●	●
Timers			
	Timer0	●	●
	Timer1	●	●
	Timer2	●	●

 © 2011 Microchip Technology Inc.

FIGURE 1-1: PIC16(L)F1507 BLOCK DIAGRAM

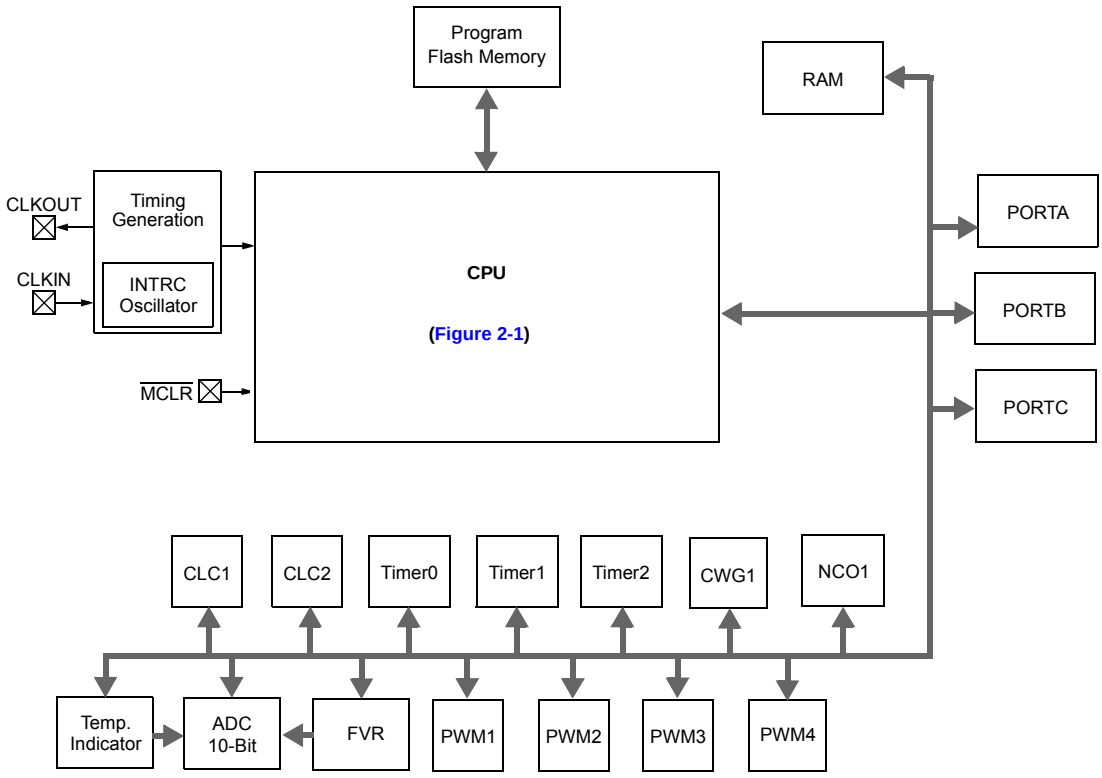

Note 1: See applicable chapters for more information on peripherals.
2: See Table 1-1 for peripherals available on specific devices.

TABLE 1-2: PIC16(L)F1507 PINOUT DESCRIPTION

Name	Function	Input Type	Output Type	Description
RA0/AN0/ICSPDAT	RA0	TTL	CMOS	General purpose I/O.
	AN0	AN	—	A/D Channel input.
	ICSPDAT	ST	CMOS	ICSP™ Data I/O.
RA1/AN1/VREF+/ICSPCLK	RA1	TTL	CMOS	General purpose I/O.
	AN1	AN	—	A/D Channel input.
	VREF+	AN	—	A/D Positive Voltage Reference input.
	ICSPCLK	ST	—	Serial Programming Clock.
RA2/AN2/T0CKI/INT/PWM3/CLC1(1)/$\overline{\text{CWG1FLT}}$	RA2	ST	CMOS	General purpose I/O.
	AN2	AN	—	A/D Channel input.
	T0CKI	ST	—	Timer0 clock input.
	INT	ST	—	External interrupt.
	PWM3	—	CMOS	Pulse Width Module source output.
	CLC1	—	CMOS	Configurable Logic Cell source output.
	$\overline{\text{CWG1FLT}}$	ST	—	Complementary Waveform Generator Fault input.
RA3/CLC1IN0/VPP/$\overline{\text{MCLR}}$	RA3	TTL	—	General purpose input.
	CLC1IN0	ST	—	Configurable Logic Cell source input.
	VPP	HV	—	Programming voltage.
	$\overline{\text{MCLR}}$	ST	—	Master Clear with internal pull-up.
RA4/AN3/CLKOUT/T1G	RA4	TTL	CMOS	General purpose I/O.
	AN3	AN	—	A/D Channel input.
	CLKOUT	—	CMOS	FOSC/4 output.
	T1G	ST	—	Timer1 Gate input.
RA5/CLKIN/T1CKI/NCO1CLK	RA5	TTL	CMOS	General purpose I/O.
	CLKIN	CMOS	—	External clock input (EC mode).
	T1CKI	ST	—	Timer1 clock input.
	NCO1CLK	ST	—	Numerically Controlled Oscillator Clock source input.
RB4/AN10	RB4	TTL	CMOS	General purpose I/O.
	AN10	AN	—	A/D Channel input.
RB5/AN11	RB5	TTL	CMOS	General purpose I/O.
	AN11	AN	—	A/D Channel input.
RB6	RB6	TTL	CMOS	General purpose I/O.
RB7	RB7	TTL	CMOS	General purpose I/O.
RC0/AN4/CLC2	RC0	TTL	CMOS	General purpose I/O.
	AN4	AN	—	A/D Channel input.
	CLC2	—	CMOS	Configurable Logic Cell source output.
RC1/AN5/PWM4/NCO1(1)	RC1	TTL	CMOS	General purpose I/O.
	AN5	AN	—	A/D Channel input.
	PWM4	—	CMOS	Pulse Width Module source output.
	NCO1	—	CMOS	Numerically Controlled Oscillator is source output.
RC2/AN6	RC2	TTL	CMOS	General purpose I/O.
	AN6	AN	—	A/D Channel input.

Legend: AN = Analog input or output CMOS = CMOS compatible input or output OD = Open Drain
TTL = TTL compatible input ST = Schmitt Trigger input with CMOS levels I^2C™ = Schmitt Trigger input with I^2C levels
HV = High Voltage XTAL = Crystal

Note 1: Default location for peripheral pin function. Alternate location can be selected using the APFCON register.
2: Alternate location for peripheral pin function selected by the APFCON register.

 © 2011 Microchip Technology Inc.

TABLE 1-2: PIC16(L)F1507 PINOUT DESCRIPTION (CONTINUED)

Name	Function	Input Type	Output Type	Description
RC3/AN7/PWM2/CLC2IN0	RC3	TTL	CMOS	General purpose I/O.
	AN7	AN	—	A/D Channel input.
	PWM2	—	CMOS	Pulse Width Module source output.
	CLC2IN0	ST	—	Configurable Logic Cell source input.
RC4/CLC2IN1/CWG1B	RC4	TTL	CMOS	General purpose I/O.
	CLC2IN1	ST	—	Configurable Logic Cell source input.
	CWG1B	—	CMOS	CWG complementary output.
RC5/PWM1/CLC1(2)/ CWG1A	RC5	TTL	CMOS	General purpose I/O.
	PWM1	—	CMOS	PWM output.
	CLC1	—	CMOS	Configurable Logic Cell source output.
	CWG1A	—	CMOS	CWG primary output.
RC6/AN8/NCO1(2)	RC6	TTL	CMOS	General purpose I/O.
	AN8	AN	—	A/D Channel input.
	NCO1	—	CMOS	Numerically Controlled Oscillator source output.
RC7/AN9/CLC1IN1	RC7	TTL	CMOS	General purpose I/O.
	AN8	AN	—	A/D Channel input.
	CLC1IN1	ST	—	Configurable Logic Cell source input.
VDD	VDD	Power	—	Positive supply.
VSS	VSS	Power	—	Ground reference.

Legend: AN = Analog input or output CMOS = CMOS compatible input or output OD = Open Drain
TTL = TTL compatible input ST = Schmitt Trigger input with CMOS levels I^2C™ = Schmitt Trigger input with I^2C levels
HV = High Voltage XTAL = Crystal

Note 1: Default location for peripheral pin function. Alternate location can be selected using the APFCON register.
2: Alternate location for peripheral pin function selected by the APFCON register.

2.0 ENHANCED MID-RANGE CPU

This family of devices contain an enhanced mid-range 8-bit CPU core. The CPU has 49 instructions. Interrupt capability includes automatic context saving. The hardware stack is 16 levels deep and has Overflow and Underflow Reset capability. Direct, Indirect, and Relative addressing modes are available. Two File Select Registers (FSRs) provide the ability to read program and data memory.

- Automatic Interrupt Context Saving
- 16-level Stack with Overflow and Underflow
- File Select Registers
- Instruction Set

2.1 Automatic Interrupt Context Saving

During interrupts, certain registers are automatically saved in shadow registers and restored when returning from the interrupt. This saves stack space and user code. See **Section 7.5 "Automatic Context Saving"**, for more information.

2.2 16-level Stack with Overflow and Underflow

These devices have an external stack memory 15 bits wide and 16 words deep. A Stack Overflow or Underflow will set the appropriate bit (STKOVF or STKUNF) in the PCON register, and if enabled will cause a software Reset. See section **Section 3.4 "Stack"** for more details.

2.3 File Select Registers

There are two 16-bit File Select Registers (FSR). FSRs can access all file registers and program memory, which allows one Data Pointer for all memory. When an FSR points to program memory, there is one additional instruction cycle in instructions using INDF to allow the data to be fetched. General purpose memory can now also be addressed linearly, providing the ability to access contiguous data larger than 80 bytes. There are also new instructions to support the FSRs. See **Section 3.5 "Indirect Addressing"** for more details.

2.4 Instruction Set

There are 49 instructions for the enhanced mid-range CPU to support the features of the CPU. See **Section 24.0 "Instruction Set Summary"** for more details.

 © 2011 Microchip Technology Inc.

FIGURE 2-1: CORE BLOCK DIAGRAM

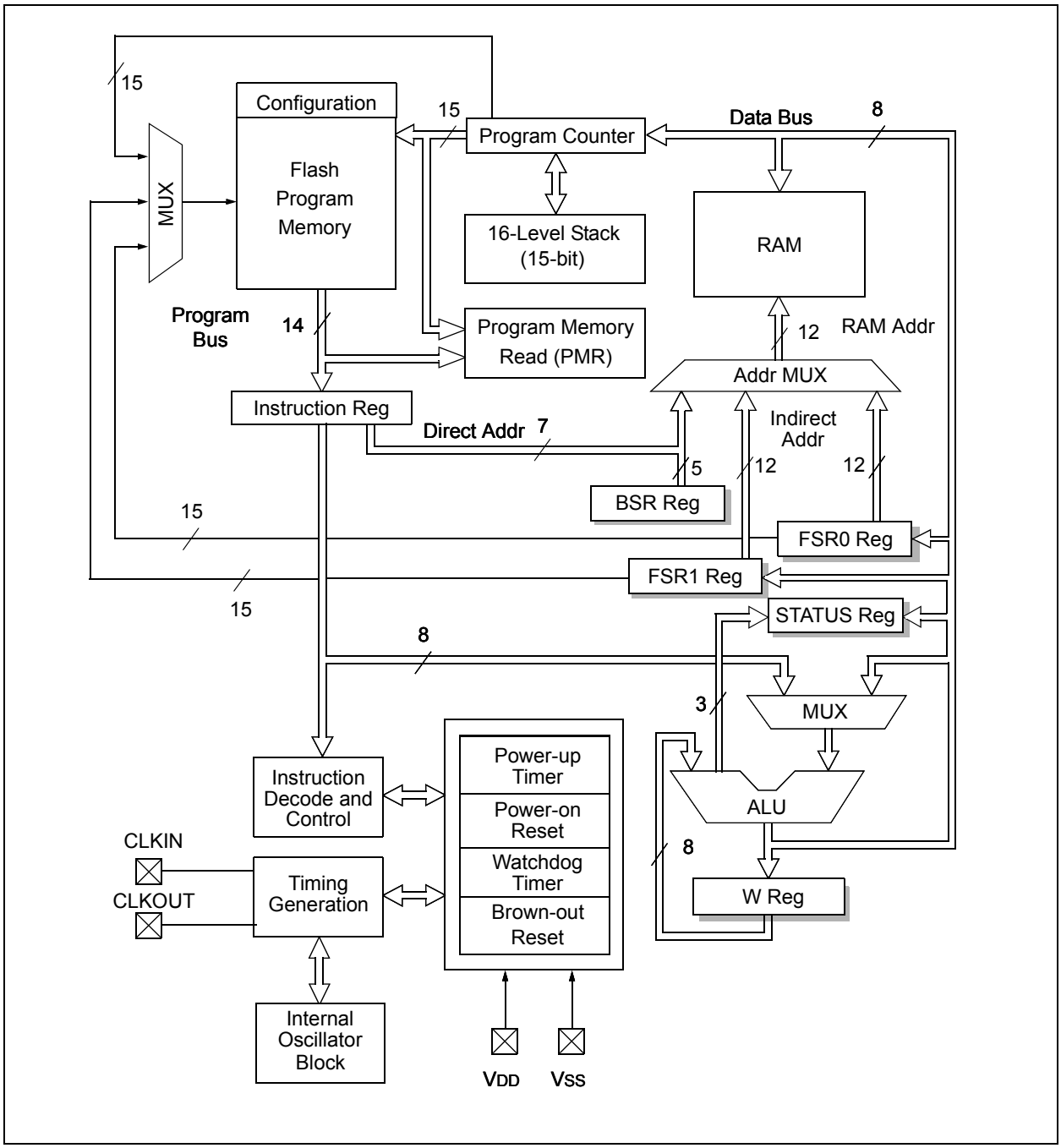

3.0 MEMORY ORGANIZATION

These devices contain the following types of memory:

- Program Memory
  - Configuration Words
  - Device ID
  - User ID
  - Flash Program Memory
- Data Memory
  - Core Registers
  - Special Function Registers
  - General Purpose RAM
  - Common RAM

The following features are associated with access and control of program memory and data memory:

- PCL and PCLATH
- Stack
- Indirect Addressing

3.1 Program Memory Organization

The enhanced mid-range core has a 15-bit program counter capable of addressing 32K x 14 program memory space. Table 3-1 shows the memory sizes implemented. Accessing a location above these boundaries will cause a wrap-around within the implemented memory space. The Reset vector is at 0000h and the interrupt vector is at 0004h (See Figure 3-1).

TABLE 3-1: DEVICE SIZES AND ADDRESSES

Device	Program Memory Space (Words)	Last Program Memory Address
PIC16F1507 PIC16LF1507	2,048	07FFh

 © 2011 Microchip Technology Inc.

FIGURE 3-1: PROGRAM MEMORY MAP AND STACK FOR PIC16(L)F1507

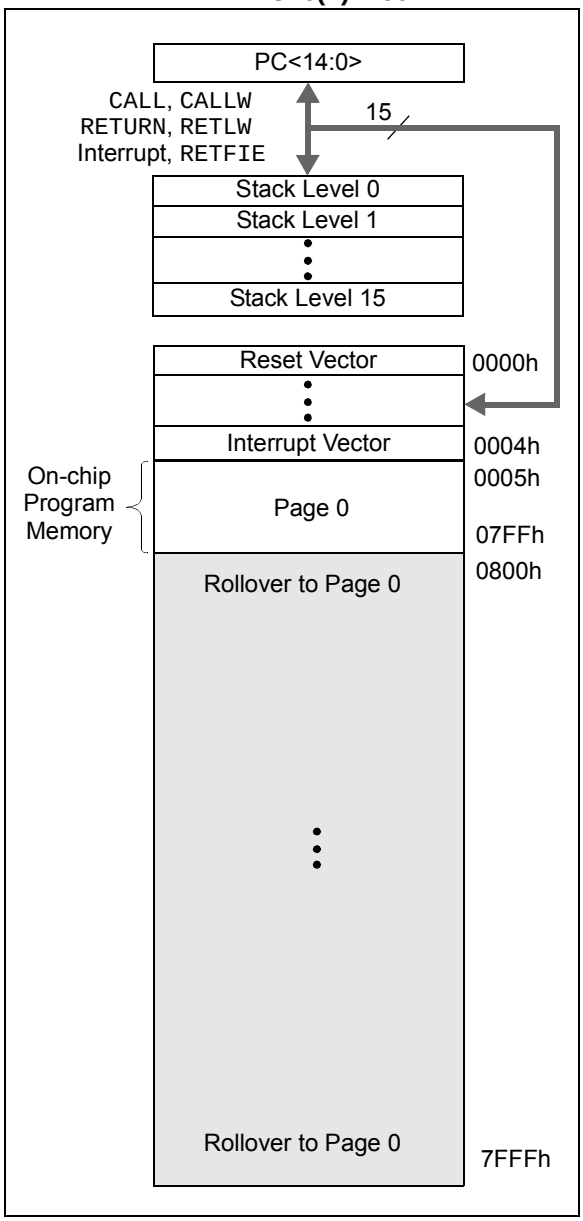

3.1.1 READING PROGRAM MEMORY AS DATA

There are two methods of accessing constants in program memory. The first method is to use tables of RETLW instructions. The second method is to set an FSR to point to the program memory.

3.1.1.1 RETLW Instruction

The RETLW instruction can be used to provide access to tables of constants. The recommended way to create such a table is shown in Example 3-1.

EXAMPLE 3-1: RETLW INSTRUCTION

```
constants
    BRW                 ;Add Index in W to
                        ;program counter to
                        ;select data
    RETLW DATA0         ;Index0 data
    RETLW DATA1         ;Index1 data
    RETLW DATA2
    RETLW DATA3


my_function
    ;… LOTS OF CODE…
    MOVLW       DATA_INDEX
    call constants
    ;… THE CONSTANT IS IN W
```

The BRW instruction makes this type of table very simple to implement. If your code must remain portable with previous generations of microcontrollers, then the BRW instruction is not available so the older table read method must be used.

3.1.1.2 Indirect Read with FSR

The program memory can be accessed as data by setting bit 7 of the FSRxH register and reading the matching INDFx register. The MOVIW instruction will place the lower 8 bits of the addressed word in the W register. Writes to the program memory cannot be performed via the INDF registers. Instructions that access the program memory via the FSR require one extra instruction cycle to complete. Example 3-2 demonstrates accessing the program memory via an FSR.

The HIGH directive will set bit<7> if a label points to a location in program memory.

EXAMPLE 3-2: ACCESSING PROGRAM MEMORY VIA FSR

```
constants
    RETLW DATA0        ;Index0 data
    RETLW DATA1        ;Index1 data
    RETLW DATA2
    RETLW DATA3
my_function
    ;… LOTS OF CODE…
    MOVLW   LOW constants
    MOVWF   FSR1L
    MOVLW   HIGH constants
    MOVWF   FSR1H
    MOVIW   0[FSR1]
;THE PROGRAM MEMORY IS IN W
```

3.2 Data Memory Organization

The data memory is partitioned in 32 memory banks with 128 bytes in a bank. Each bank consists of (Figure 3-2):

- 12 core registers
- 20 Special Function Registers (SFR)
- Up to 80 bytes of General Purpose RAM (GPR)
- 16 bytes of common RAM

The active bank is selected by writing the bank number into the Bank Select Register (BSR). Unimplemented memory will read as '0'. All data memory can be accessed either directly (via instructions that use the file registers) or indirectly via the two File Select Registers (FSR). See **Section 3.5 "Indirect Addressing"** for more information.

Data Memory uses a 12-bit address. The upper 7-bit of the address define the Bank address and the lower 5-bits select the registers/RAM in that bank.

3.2.1 CORE REGISTERS

The core registers contain the registers that directly affect the basic operation. The core registers occupy the first 12 addresses of every data memory bank (addresses x00h/x08h through x0Bh/x8Bh). These registers are listed below in Table 3-2. For for detailed information, see Table 3-4.

TABLE 3-2: CORE REGISTERS

Addresses	BANKx
x00h or x80h	INDF0
x01h or x81h	INDF1
x02h or x82h	PCL
x03h or x83h	STATUS
x04h or x84h	FSR0L
x05h or x85h	FSR0H
x06h or x86h	FSR1L
x07h or x87h	FSR1H
x08h or x88h	BSR
x09h or x89h	WREG
x0Ah or x8Ah	PCLATH
x0Bh or x8Bh	INTCON

 © 2011 Microchip Technology Inc.

3.2.1.1 STATUS Register

The STATUS register, shown in Register 3-1, contains:

- the arithmetic status of the ALU
- the Reset status

The STATUS register can be the destination for any instruction, like any other register. If the STATUS register is the destination for an instruction that affects the Z, DC or C bits, then the write to these three bits is disabled. These bits are set or cleared according to the device logic. Furthermore, the $\overline{TO}$ and $\overline{PD}$ bits are not writable. Therefore, the result of an instruction with the STATUS register as destination may be different than intended.

For example, `CLRF STATUS` will clear the upper three bits and set the Z bit. This leaves the STATUS register as '`000u u1uu`' (where u = unchanged).

It is recommended, therefore, that only `BCF`, `BSF`, `SWAPF` and `MOVWF` instructions are used to alter the STATUS register, because these instructions do not affect any Status bits. For other instructions not affecting any Status bits (Refer to **Section 24.0 "Instruction Set Summary"**).

Note 1: The C and DC bits operate as $\overline{Borrow}$ and $\overline{Digit\ Borrow}$ out bits, respectively, in subtraction.

REGISTER 3-1: STATUS: STATUS REGISTER

U-0	U-0	U-0	R-1/q	R-1/q	R/W-0/u	R/W-0/u	R/W-0/u
—	—	—	$\overline{TO}$	$\overline{PD}$	Z	DC(1)	C(1)
bit 7							bit 0

Legend:		
R = Readable bit	W = Writable bit	U = Unimplemented bit, read as '0'
u = Bit is unchanged	x = Bit is unknown	-n/n = Value at POR and BOR/Value at all other Resets
'1' = Bit is set	'0' = Bit is cleared	q = Value depends on condition

bit 7-5 **Unimplemented:** Read as '0'

bit 4 **$\overline{TO}$:** Time-Out bit
1 = After power-up, `CLRWDT` instruction or `SLEEP` instruction
0 = A WDT time-out occurred

bit 3 **$\overline{PD}$:** Power-Down bit
1 = After power-up or by the `CLRWDT` instruction
0 = By execution of the `SLEEP` instruction

bit 2 **Z:** Zero bit
1 = The result of an arithmetic or logic operation is zero
0 = The result of an arithmetic or logic operation is not zero

bit 1 **DC:** Digit Carry/$\overline{Digit\ Borrow}$ bit (`ADDWF`, `ADDLW`, `SUBLW`, `SUBWF` instructions)(1)
1 = A carry-out from the 4th low-order bit of the result occurred
0 = No carry-out from the 4th low-order bit of the result

bit 0 **C:** Carry/$\overline{Borrow}$ bit(1) (`ADDWF`, `ADDLW`, `SUBLW`, `SUBWF` instructions)(1)
1 = A carry-out from the Most Significant bit of the result occurred
0 = No carry-out from the Most Significant bit of the result occurred

Note 1: For $\overline{Borrow}$, the polarity is reversed. A subtraction is executed by adding the two's complement of the second operand. For rotate (`RRF`, `RLF`) instructions, this bit is loaded with either the high-order or low-order bit of the source register.

3.2.2 SPECIAL FUNCTION REGISTER

The Special Function Registers are registers used by the application to control the desired operation of peripheral functions in the device. The Special Function Registers occupy the 20 bytes after the core registers of every data memory bank (addresses x0Ch/x8Ch through x1Fh/x9Fh). The registers associated with the operation of the peripherals are described in the appropriate peripheral chapter of this data sheet.

3.2.3 GENERAL PURPOSE RAM

There are up to 80 bytes of GPR in each data memory bank. The Special Function Registers occupy the 20 bytes after the core registers of every data memory bank (addresses x0Ch/x8Ch through x1Fh/x9Fh).

3.2.3.1 Linear Access to GPR

The general purpose RAM can be accessed in a non-banked method via the FSRs. This can simplify access to large memory structures. See **Section 3.5.2 "Linear Data Memory"** for more information.

3.2.4 COMMON RAM

There are 16 bytes of common RAM accessible from all banks.

FIGURE 3-2: BANKED MEMORY PARTITIONING

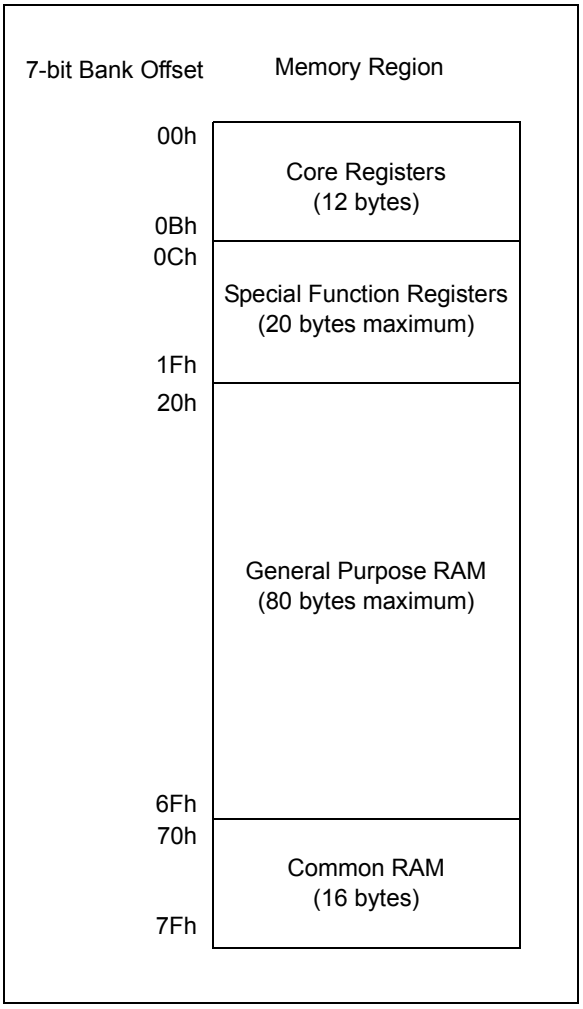

3.2.5 DEVICE MEMORY MAPS

The memory maps for PIC16(L)F1507 are as shown in Table 3-3.

 © 2011 Microchip Technology Inc.

TABLE 3-3: PIC16(L)F1507 MEMORY MAP

BANK 0		BANK 1		BANK 2		BANK 3		BANK 4		BANK 5		BANK 6		BANK 7	
000h	Core Registers (Table 3-2)	080h	Core Registers (Table 3-2)	100h	Core Registers (Table 3-2)	180h	Core Registers (Table 3-2)	200h	Core Registers (Table 3-2)	280h	Core Registers (Table 3-2)	300h	Core Registers (Table 3-2)	380h	Core Registers (Table 3-2)
00Bh		08Bh		10Bh		18Bh		20Bh		28Bh		30Bh		38Bh	
00Ch	PORTA	08Ch	TRISA	10Ch	LATA	18Ch	ANSELA	20Ch	WPUA	28Ch	—	30Ch	—	38Ch	—
00Dh	PORTB	08Dh	TRISB	10Dh	LATB	18Dh	ANSELB	20Dh	WPUB	28Dh	—	30Dh	—	38Dh	—
00Eh	PORTC	08Eh	TRISC	10Eh	LATC	18Eh	ANSELC	20Eh	—	28Eh	—	30Eh	—	38Eh	—
00Fh	—	08Fh	—	10Fh	—	18Fh	—	20Fh	—	28Fh	—	30Fh	—	38Fh	—
010h	—	090h	—	110h	—	190h	—	210h	—	290h	—	310h	—	390h	—
011h	PIR1	091h	PIE1	111h	—	191h	PMADRL	211h	—	291h	—	311h	—	391h	IOCAP
012h	PIR2	092h	PIE2	112h	—	192h	PMADRH	212h	—	292h	—	312h	—	392h	IOCAN
013h	PIR3	093h	PIE3	113h	—	193h	PMDATL	213h	—	293h	—	313h	—	393h	IOCAF
014h	—	094h	—	114h	—	194h	PMDATH	214h	—	294h	—	314h	—	394h	IOCBP
015h	TMR0	095h	OPTION_REG	115h	—	195h	PMCON1	215h	—	295h	—	315h	—	395h	IOCBN
016h	TMR1L	096h	PCON	116h	BORCON	196h	PMCON2	216h	—	296h	—	316h	—	396h	IOCBF
017h	TMR1H	097h	WDTCON	117h	FVRCON	197h	VREGCON	217h	—	297h	—	317h	—	397h	—
018h	T1CON	098h	—	118h	—	198h	—	218h	—	298h	—	318h	—	398h	—
019h	T1GCON	099h	OSCCON	119h	—	199h	—	219h	—	299h	—	319h	—	399h	—
01Ah	TMR2	09Ah	OSCSTAT	11Ah	—	19Ah	—	21Ah	—	29Ah	—	31Ah	—	39Ah	—
01Bh	PR2	09Bh	ADRESL	11Bh	—	19Bh	—	21Bh	—	29Bh	—	31Bh	—	39Bh	—
01Ch	T2CON	09Ch	ADRESH	11Ch	—	19Ch	—	21Ch	—	29Ch	—	31Ch	—	39Ch	—
01Dh	—	09Dh	ADCON0	11Dh	APFCON	19Dh	—	21Dh	—	29Dh	—	31Dh	—	39Dh	—
01Eh	—	09Eh	ADCON1	11Eh	—	19Eh	—	21Eh	—	29Eh	—	31Eh	—	39Eh	—
01Fh	—	09Fh	ADCON2	11Fh	—	19Fh	—	21Fh	—	29Fh	—	31Fh	—	39Fh	—
020h	General Purpose Register 80 Bytes	0A0h	General Purpose Register 32 Bytes	120h	Unimplemented Read as '0'	1A0h	Unimplemented Read as '0'	220h	Unimplemented Read as '0'	2A0h	Unimplemented Read as '0'	320h	Unimplemented Read as '0'	3A0h	Unimplemented Read as '0'
06Fh		0BFh		16Fh		1EFh		26Fh		2EFh		36Fh		3EFh	
070h	Common RAM	0C0h	Unimplemented Read as '0'	170h	Common RAM (Accesses 70h – 7Fh)	1F0h	Common RAM (Accesses 70h – 7Fh)	270h	Common RAM (Accesses 70h – 7Fh)	2F0h	Common RAM (Accesses 70h – 7Fh)	370h	Common RAM (Accesses 70h – 7Fh)	3F0h	Common RAM (Accesses 70h – 7Fh)
07Fh		0EFh		17Fh		1FFh		27Fh		2FFh		37Fh		3FFh	
		0F0h	Common RAM (Accesses 70h – 7Fh)												
		0FFh													

Legend: = Unimplemented data memory locations, read as '0'

Preliminary

© 2011 Microchip Technology Inc.

TABLE 3-3: PIC16(L)F1507 MEMORY MAP (CONTINUED)

BANK 8		BANK 9		BANK 10		BANK 11		BANK 12		BANK 13		BANK 14		BANK 15	
400h	Core Registers (Table 3-2)	480h	Core Registers (Table 3-2)	500h	Core Registers (Table 3-2)	580h	Core Registers (Table 3-2)	600h	Core Registers (Table 3-2)	680h	Core Registers (Table 3-2)	700h	Core Registers (Table 3-2)	780h	Core Registers (Table 3-2)
40Bh		48Bh		50Bh		58Bh		60Bh		68Bh		70Bh		78Bh	
40Ch	—	48Ch	—	50Ch	—	58Ch	—	60Ch	—	68Ch	—	70Ch	—	78Ch	—
40Dh	—	48Dh	—	50Dh	—	58Dh	—	60Dh	—	68Dh	—	70Dh	—	78Dh	—
40Eh	—	48Eh	—	50Eh	—	58Eh	—	60Eh	—	68Eh	—	70Eh	—	78Eh	—
40Fh	—	48Fh	—	50Fh	—	58Fh	—	60Fh	—	68Fh	—	70Fh	—	78Fh	—
410h	—	490h	—	510h	—	590h	—	610h	—	690h	—	710h	—	790h	—
411h	—	491h	—	511h	—	591h	—	611h	PWM1DCL	691h	CWG1DBR	711h	—	791h	—
412h	—	492h	—	512h	—	592h	—	612h	PWM1DCH	692h	CWG1DBF	712h	—	792h	—
413h	—	493h	—	513h	—	593h	—	613h	PWM1CON	693h	CWG1CON0	713h	—	793h	—
414h	—	494h	—	514h	—	594h	—	614h	PWM2DCL	694h	CWG1CON1	714h	—	794h	—
415h	—	495h	—	515h	—	595h	—	615h	PWM2DCH	695h	CWG1CON2	715h	—	795h	—
416h	—	496h	—	516h	—	596h	—	616h	PWM2CON	696h	—	716h	—	796h	—
417h	—	497h	—	517h	—	597h	—	617h	PWM3DCL	697h	—	717h	—	797h	—
418h	—	498h	NCO1ACCL	518h	—	598h	—	618h	PWM3DCH	698h	—	718h	—	798h	—
419h	—	499h	NCO1ACCH	519h	—	599h	—	619h	PWM3CON	699h	—	719h	—	799h	—
41Ah	—	49Ah	NCO1ACCU	51Ah	—	59Ah	—	61Ah	PWM4DCL	69Ah	—	71Ah	—	79Ah	—
41Bh	—	49Bh	NCO1INCL	51Bh	—	59Bh	—	61Bh	PWM4DCH	69Bh	—	71Bh	—	79Bh	—
41Ch	—	49Ch	NCO1INCH	51Ch	—	59Ch	—	61Ch	PWM4CON	69Ch	—	71Ch	—	79Ch	—
41Dh	—	49Dh	—	51Dh	—	59Dh	—	61Dh	—	69Dh	—	71Dh	—	79Dh	—
41Eh	—	49Eh	NCO1CON	51Eh	—	59Eh	—	61Eh	—	69Eh	—	71Eh	—	79Eh	—
41Fh	—	49Fh	NCO1CLK	51Fh	—	59Fh	—	61Fh	—	69Fh	—	71Fh	—	79Fh	—
420h	Unimplemented Read as '0'	4A0h	Unimplemented Read as '0'	520h	Unimplemented Read as '0'	5A0h	Unimplemented Read as '0'	620h	Unimplemented Read as '0'	6A0h	Unimplemented Read as '0'	720h	Unimplemented Read as '0'	7A0h	Unimplemented Read as '0'
46Fh		4EFh		56Fh		5EFh		64Fh		6EFh		76Fh		7EFh	
470h	Common RAM (Accesses 70h – 7Fh)	4F0h	Common RAM (Accesses 70h – 7Fh)	570h	Common RAM (Accesses 70h – 7Fh)	5F0h	Common RAM (Accesses 70h – 7Fh)	650h	Common RAM (Accesses 70h – 7Fh)	6F0h	Common RAM (Accesses 70h – 7Fh)	770h	Common RAM (Accesses 70h – 7Fh)	7F0h	Common RAM (Accesses 70h – 7Fh)
47Fh		4FFh		57Fh		5FFh		67Fh		6FFh		77Fh		7FFh	

BANK 16		BANK 17		BANK 18		BANK 19		BANK 20		BANK 21		BANK 22		BANK 23	
800h	Core Registers (Table 3-2)	880h	Core Registers (Table 3-2)	900h	Core Registers (Table 3-2)	980h	Core Registers (Table 3-2)	A00h	Core Registers (Table 3-2)	A80h	Core Registers (Table 3-2)	B00h	Core Registers (Table 3-2)	B80h	Core Registers (Table 3-2)
80Bh		88Bh		90Bh		98Bh		A0Bh		A8Bh		B0Bh		B8Bh	
80Ch	Unimplemented Read as '0'	88Ch	Unimplemented Read as '0'	90Ch	Unimplemented Read as '0'	98Ch	Unimplemented Read as '0'	A0Ch	Unimplemented Read as '0'	A8Ch	Unimplemented Read as '0'	B0Ch	Unimplemented Read as '0'	B8Ch	Unimplemented Read as '0'
86Fh		8EFh		96Fh		9EFh		A6Fh		AEFh		B6Fh		BEFh	
870h	Common RAM (Accesses 70h – 7Fh)	8F0h	Common RAM (Accesses 70h – 7Fh)	970h	Common RAM (Accesses 70h – 7Fh)	9F0h	Common RAM (Accesses 70h – 7Fh)	A70h	Common RAM (Accesses 70h – 7Fh)	AF0h	Common RAM (Accesses 70h – 7Fh)	B70h	Common RAM (Accesses 70h – 7Fh)	BF0h	Common RAM (Accesses 70h – 7Fh)
87Fh		8FFh		97Fh		9FFh		A7Fh		AFFh		B7Fh		BFFh	

Legend: = Unimplemented data memory locations, read as '0'

© 2011 Microchip Technology Inc.

TABLE 3-3: PIC16(L)F1507 MEMORY MAP (CONTINUED)

BANK 24		BANK 25		BANK 26		BANK 27		BANK 28		BANK 29		BANK 30		BANK 31	
C00h	Core Registers (Table 3-2)	C80h	Core Registers (Table 3-2)	D00h	Core Registers (Table 3-2)	D80h	Core Registers (Table 3-2)	E00h	Core Registers (Table 3-2)	E80h	Core Registers (Table 3-2)	F00h	Core Registers (Table 3-2)	F80h	Core Registers (Table 3-2)
C0Bh		C8Bh		D0Bh		D8Bh		E0Bh		E8Bh		F0Bh		F8Bh	
C0Ch	—	C8Ch	—	D0Ch	—	D8Ch	—	E0Ch	—	E8Ch	—	F0Ch	See Table 3-3 for register mapping details	F8Ch	See Table 3-3 for register mapping details
C0Dh	—	C8Dh	—	D0Dh	—	D8Dh	—	E0Dh	—	E8Dh	—	F0Dh		F8Dh	
C0Eh	—	C8Eh	—	D0Eh	—	D8Eh	—	E0Eh	—	E8Eh	—	F0Eh		F8Eh	
C0Fh	—	C8Fh	—	D0Fh	—	D8Fh	—	E0Fh	—	E8Fh	—	F0Fh		F8Fh	
C10h	—	C90h	—	D10h	—	D90h	—	E10h	—	E90h	—	F10h		F90h	
C11h	—	C91h	—	D11h	—	D91h	—	E11h	—	E91h	—	F11h		F91h	
C12h	—	C92h	—	D12h	—	D92h	—	E12h	—	E92h	—	F12h		F92h	
C13h	—	C93h	—	D13h	—	D93h	—	E13h	—	E93h	—	F13h		F93h	
C14h	—	C94h	—	D14h	—	D94h	—	E14h	—	E94h	—	F14h		F94h	
C15h	—	C95h	—	D15h	—	D95h	—	E15h	—	E95h	—	F15h		F95h	
C16h	—	C96h	—	D16h	—	D96h	—	E16h	—	E96h	—	F16h		F96h	
C17h	—	C97h	—	D17h	—	D97h	—	E17h	—	E97h	—	F17h		F97h	
C18h	—	C98h	—	D18h	—	D98h	—	E18h	—	E98h	—	F18h		F98h	
C19h	—	C99h	—	D19h	—	D99h	—	E19h	—	E99h	—	F19h		F99h	
C1Ah	—	C9Ah	—	D1Ah	—	D9Ah	—	E1Ah	—	E9Ah	—	F1Ah		F9Ah	
C1Bh	—	C9Bh	—	D1Bh	—	D9Bh	—	E1Bh	—	E9Bh	—	F1Bh		F9Bh	
C1Ch	—	C9Ch	—	D1Ch	—	D9Ch	—	E1Ch	—	E9Ch	—	F1Ch		F9Ch	
C1Dh	—	C9Dh	—	D1Dh	—	D9Dh	—	E1Dh	—	E9Dh	—	F1Dh		F9Dh	
C1Eh	—	C9Eh	—	D1Eh	—	D9Eh	—	E1Eh	—	E9Eh	—	F1Eh		F9Eh	
C1Fh	—	C9Fh	—	D1Fh	—	D9Fh	—	E1Fh	—	E9Fh	—	F1Fh		F9Fh	
C20h	Unimplemented Read as '0'	CA0h	Unimplemented Read as '0'	D20h	Unimplemented Read as '0'	DA0h	Unimplemented Read as '0'	E20h	Unimplemented Read as '0'	EA0h	Unimplemented Read as '0'	F20h		FA0h	
C6Fh		CEFh		D6Fh		DEFh		E6Fh		EEFh		F6Fh		FEFh	
C70h	Common RAM (Accesses 70h – 7Fh)	CF0h	Common RAM (Accesses 70h – 7Fh)	D70h	Common RAM (Accesses 70h – 7Fh)	DF0h	Common RAM (Accesses 70h – 7Fh)	E70h	Common RAM (Accesses 70h – 7Fh)	EF0h	Common RAM (Accesses 70h – 7Fh)	F70h	Common RAM (Accesses 70h – 7Fh)	FF0h	Common RAM (Accesses 70h – 7Fh)
CFFh		CFFh		D7Fh		DFFh		E7Fh		EFFh		F7Fh		FFFh	

Legend: = Unimplemented data memory locations, read as '0'.

Preliminary

© 2011 Microchip Technology Inc.

TABLE 3-3: PIC16(L)F1507 MEMORY MAP (CONTINUED)

Bank 30	
F0Ch	—
F0Dh	—
F0Eh	—
F0Fh	CLCDATA
F10h	CLC1CON
F11h	CLC1POL
F12h	CLC1SEL0
F13h	CLC1SEL1
F14h	CLC1GLS0
F15h	CLC1GLS1
F16h	CLC1GLS2
F17h	CLC1GLS3
F18h	CLC2CON
F19h	CLC2POL
F1Ah	CLC2SEL0
F1Bh	CLC2SEL1
F1Ch	CLC2GLS0
F1Dh	CLC2GLS1
F1Eh	CLC2GLS2
F1Fh	CLC2GLS3
F20h F6Fh	Unimplemented Read as '0'

Bank 31	
F8Ch FE3h	Unimplemented Read as '0'
FE4h	STATUS_SHAD
FE5h	WREG_SHAD
FE6h	BSR_SHAD
FE7h	PCLATH_SHAD
FE8h	FSR0L_SHAD
FE9h	FSR0H_SHAD
FEAh	FSR1L_SHAD
FEBh	FSR1H_SHAD
FECh	—
FEDh	STKPTR
FEEh	TOSL
FEFh	TOSH

Legend: = Unimplemented data memory locations, read as '0'.

© 2011 Microchip Technology Inc.

3.2.6 CORE FUNCTION REGISTERS SUMMARY

The Core Function registers listed in Table 3-4 can be addressed from any Bank.

TABLE 3-4: CORE FUNCTION REGISTERS SUMMARY

Addr	Name	Bit 7	Bit 6	Bit 5	Bit 4	Bit 3	Bit 2	Bit 1	Bit 0	Value on POR, BOR	Value on all other resets
Bank 0-31											
x00h or x80h	INDF0	Addressing this location uses contents of FSR0H/FSR0L to address data memory (not a physical register)								xxxx xxxx	uuuu uuuu
x01h or x81h	INDF1	Addressing this location uses contents of FSR1H/FSR1L to address data memory (not a physical register)								xxxx xxxx	uuuu uuuu
x02h or x82h	PCL	Program Counter (PC) Least Significant Byte								0000 0000	0000 0000
x03h or x83h	STATUS	—	—	—	$\overline{TO}$	$\overline{PD}$	Z	DC	C	---1 1000	---q quuu
x04h or x84h	FSR0L	Indirect Data Memory Address 0 Low Pointer								0000 0000	uuuu uuuu
x05h or x85h	FSR0H	Indirect Data Memory Address 0 High Pointer								0000 0000	0000 0000
x06h or x86h	FSR1L	Indirect Data Memory Address 1 Low Pointer								0000 0000	uuuu uuuu
x07h or x87h	FSR1H	Indirect Data Memory Address 1 High Pointer								0000 0000	0000 0000
x08h or x88h	BSR	—	—	—	BSR<4:0>					---0 0000	---0 0000
x09h or x89h	WREG	Working Register								0000 0000	uuuu uuuu
x0Ah or x8Ah	PCLATH	—	Write Buffer for the upper 7 bits of the Program Counter							-000 0000	-000 0000
x0Bh or x8Bh	INTCON	GIE	PEIE	TMR0IE	INTE	IOCIE	TMR0IF	INTF	IOCIF	0000 0000	0000 0000

Legend: x = unknown, u = unchanged, q = value depends on condition, - = unimplemented, read as '0', r = reserved. Shaded locations are unimplemented, read as '0'.

TABLE 3-5: SPECIAL FUNCTION REGISTER SUMMARY

Address	Name	Bit 7	Bit 6	Bit 5	Bit 4	Bit 3	Bit 2	Bit 1	Bit 0	Value on POR, BOR	Value on all other Resets
Bank 0											
00Ch	PORTA	—	—	RA5	RA4	RA3	RA2	RA1	RA0	--xx xxxx	--xx xxxx
00Dh	PORTB	RB7	RB6	RB5	RB4	—	—	—	—	xxxx ----	xxxx ----
00Eh	PORTC	RC7	RC6	RC5	RC4	RC3	RC2	RC1	RC0	xxxx xxxx	xxxx xxxx
00Fh	—	Unimplemented								—	—
010h	—	Unimplemented								—	—
011h	PIR1	TMR1GIF	ADIF	—	—	—	—	TMR2IF	TMR1IF	00-- --00	00-- --00
012h	PIR2	—	—	—	—	—	NCO1IF	—	—	---- -0--	---- -0--
013h	PIR3	—	—	—	—	—	—	CLC2IF	CLC1IF	---- --00	---- --00
014h	—	Unimplemented								—	—
015h	TMR0	Holding Register for the 8-bit Timer0 Count								xxxx xxxx	uuuu uuuu
016h	TMR1L	Holding Register for the Least Significant Byte of the 16-bit TMR1 Count								xxxx xxxx	uuuu uuuu
017h	TMR1H	Holding Register for the Most Significant Byte of the 16-bit TMR1 Count								xxxx xxxx	uuuu uuuu
018h	T1CON	TMR1CS<1:0>		T1CKPS<1:0>		—	$\overline{\text{T1SYNC}}$	—	TMR1ON	0000 -0-0	uuuu -u-u
019h	T1GCON	TMR1GE	T1GPOL	T1GTM	T1GSPM	T1GGO/$\overline{\text{DONE}}$	T1GVAL	—	T1GSS	0000 0x-0	uuuu ux-u
01Ah	TMR2	Timer2 Module Register								0000 0000	0000 0000
01Bh	PR2	Timer2 Period Register								1111 1111	1111 1111
01Ch	T2CON	—	T2OUTPS<3:0>				TMR2ON	T2CKPS<1:0>		-000 0000	-000 0000
01Dh	—	Unimplemented								—	—
01Eh	—	Unimplemented								—	—
01Fh	—	Unimplemented								—	—
Bank 1											
08Ch	TRISA	—	—	TRISA5	TRISA4	—(2)	TRISA2	TRISA1	TRISA0	--11 1111	--11 1111
08Dh	TRISB	TRISB7	TRISB6	TRISB5	TRISB4	—	—	—	—	1111 ----	1111 ----
08Eh	TRISC	TRISC7	TRISC6	TRISC5	TRISC4	TRISC3	TRISC2	TRISC1	TRISC0	1111 1111	1111 1111
08Fh	—	Unimplemented								—	—
090h	—	Unimplemented								—	—
091h	PIE1	TMR1GIE	ADIE	—	—	—	—	TMR2IE	TMR1IE	00-- --00	00-- --00
092h	PIE2	—	—	—	—	—	NCO1IE	—	—	---- -0--	---- -0--
093h	PIE3	—	—	—	—	—	—	CLC2IE	CLC1IE	---- --00	---- --00
094h	—	Unimplemented								—	—
095h	OPTION_REG	$\overline{\text{WPUEN}}$	INTEDG	TMR0CS	TMR0SE	PSA	PS<2:0>			1111 1111	1111 1111
096h	PCON	STKOVF	STKUNF	—	$\overline{\text{RWDT}}$	$\overline{\text{RMCLR}}$	$\overline{\text{RI}}$	$\overline{\text{POR}}$	$\overline{\text{BOR}}$	00-1 11qq	qq-q qquu
097h	WDTCON	—	—	WDTPS<4:0>					SWDTEN	--01 0110	--01 0110
098h	—	Unimplemented								—	—
099h	OSCCON	—	IRCF<3:0>				—	SCS<1:0>		-011 1-00	-011 1-00
09Ah	OSCSTAT	—	—	—	HFIOFR	—	—	LFIOFR	HFIOFS	1-q0 --00	q-qq --qq
09Bh	ADRESL	A/D Result Register Low								xxxx xxxx	uuuu uuuu
09Ch	ADRESH	A/D Result Register High								xxxx xxxx	uuuu uuuu
09Dh	ADCON0	—	CHS<4:0>					GO/$\overline{\text{DONE}}$	ADON	-000 0000	-000 0000
09Eh	ADCON1	ADFM	ADCS<2:0>			—	—	ADPREF<1:0>		0000 --00	0000 --00
09Fh	ADCON2	TRIGSEL<3:0>				—	—	—	—	0000 ----	0000 ----

Legend: x = unknown, u = unchanged, q = value depends on condition, - = unimplemented, r = reserved.
Shaded locations are unimplemented, read as '0'.

Note 1: PIC16F1507 only.
2: Unimplemented, read as '1'.

© 2011 Microchip Technology Inc.

TABLE 3-5: SPECIAL FUNCTION REGISTER SUMMARY (CONTINUED)

Address	Name	Bit 7	Bit 6	Bit 5	Bit 4	Bit 3	Bit 2	Bit 1	Bit 0	Value on POR, BOR	Value on all other Resets
Bank 2											
10Ch	LATA	—	—	LATA5	LATA4	—	LATA2	LATA1	LATA0	--xx -xxx	--uu -uuu
10Dh	LATB	LATB7	LATB6	LATB5	LATB4	—	—	—	—	xxxx ----	uuuu ----
10Eh	LATC	LATC7	LATC6	LATC5	LATC4	LATC3	LATC2	LATC1	LATC0	xxxx xxxx	uuuu uuuu
10Fh to 115h	—	Unimplemented								—	—
116h	BORCON	SBOREN	BORFS	—	—	—	—	—	BORRDY	10-- ---q	uu-- ---u
117h	FVRCON	FVREN	FVRRDY	TSEN	TSRNG	—	—	ADFVR<1:0>		0q00 --00	0q00 --00
118h to 11Ch	—	Unimplemented								—	—
11Dh	APFCON	—	—	—	—	—	—	CLC1SEL	NCO1SEL	---- --00	---- --00
11Eh	—	Unimplemented								—	—
11Fh	—	Unimplemented								—	—
Bank 3											
18Ch	ANSELA	—	—	—	ANSA4	—	ANSA2	ANSA1	ANSA0	---1 -111	---1 -111
18Dh	ANSELB	—	—	ANSB5	ANSB4	—	—	—	—	--11 ----	--11 ----
18Eh	ANSELC	ANSC7	ANSC6	—	—	ANSC3	ANSC2	ANSC1	ANSC0	11-- 1111	11-- 1111
18Fh	—	Unimplemented								—	—
190h	—	Unimplemented								—	—
191h	PMADRL	Flash Program Memory Address Register Low Byte								0000 0000	0000 0000
192h	PMADRH	—	Flash Program Memory Address Register High Byte							-000 0000	-000 0000
193h	PMDATL	Flash Program Memory Read Data Register Low Byte								xxxx xxxx	uuuu uuuu
194h	PMDATH	—	—	Flash Program Memory Read Data Register High Byte						--xx xxxx	--uu uuuu
195h	PMCON1	—(2)	CFGS	LWLO	FREE	WRERR	WREN	WR	RD	0000 x000	0000 q000
196h	PMCON2	Flash Program Memory Control Register 2								0000 0000	0000 0000
197h	VREGCON(1)	—	—	—	—	—	—	VREGPM	Reserved	---- --01	---- --01
198h to 19Fh	—	Unimplemented								—	—
Bank 4											
20Ch	WPUA	—	—	WPUA5	WPUA4	WPUA3	WPUA2	WPUA1	WPUA0	--11 1111	--11 1111
20Dh	WPUB	WPUB7	WPUB6	WPUB5	WPUB4	—	—	—	—	1111 ----	1111 ----
20Eh to 21Fh	—	Unimplemented								—	—
Bank 5											
28Ch to 29Fh	—	Unimplemented								—	—
Bank 6											
30Ch to 31Fh	—	Unimplemented								—	—

Legend: x = unknown, u = unchanged, q = value depends on condition, - = unimplemented, r = reserved.
Shaded locations are unimplemented, read as '0'.

Note 1: PIC16F1507 only.
2: Unimplemented, read as '1'.

TABLE 3-5: SPECIAL FUNCTION REGISTER SUMMARY (CONTINUED)

Address	Name	Bit 7	Bit 6	Bit 5	Bit 4	Bit 3	Bit 2	Bit 1	Bit 0	Value on POR, BOR	Value on all other Resets
Bank 7											
38Ch to 390h	—	Unimplemented								—	—
391h	IOCAP	—	—	IOCAP5	IOCAP4	IOCAP3	IOCAP2	IOCAP1	IOCAP0	--00 0000	--00 0000
392h	IOCAN	—	—	IOCAN5	IOCAN4	IOCAN3	IOCAN2	IOCAN1	IOCAN0	--00 0000	--00 0000
393h	IOCAF	—	—	IOCAF5	IOCAF4	IOCAF3	IOCAF2	IOCAF1	IOCAF0	--00 0000	--00 0000
394h	IOCBP	IOCBP7	IOCBP6	IOCBP5	IOCBP4	—	—	—	—	0000 ----	0000 ----
395h	IOCBN	IOCBN7	IOCBN6	IOCBN5	IOCBN4	—	—	—	—	0000 ----	0000 ----
396h	IOCBF	IOCBF7	IOCBF6	IOCBF5	IOCBF4	—	—	—	—	0000 ----	0000 ----
397h to 39Fh	—	Unimplemented								—	—
Bank 8											
40Ch to 41Fh	—	Unimplemented								—	—
Bank 9											
48Ch to 497h	—	Unimplemented								—	—
498h	NCO1ACCL	NCO1ACC<7:0>								0000 0000	0000 0000
499h	NCO1ACCH	NCO1ACC<15:8>								0000 0000	0000 0000
49Ah	NCO1ACCU	NCO1ACC<23:16>								0000 0000	0000 0000
49Bh	NCO1INCL	NCO1INC<7:0>								0000 0000	0000 0000
49Ch	NCO1INCH	NCO1INC<15:8>								0000 0000	0000 0000
49Dh	—	Unimplemented								—	—
49Eh	NCO1CON	N1EN	N1OE	N1OUT	N1POL	—	—	—	N1PFM	0000 ---0	0000 ---0
49Fh	NCO1CLK	N1PWS<2:0>			—	—	—	N1CKS<1:0>		0000 --00	0000 --00
Bank 10											
50Ch to 51Fh	—	Unimplemented								—	—
Bank 11											
58Ch to 59Fh	—	Unimplemented								—	—

Legend: x = unknown, u = unchanged, q = value depends on condition, - = unimplemented, r = reserved.
Shaded locations are unimplemented, read as '0'.

Note 1: PIC16F1507 only.

2: Unimplemented, read as '1'.

© 2011 Microchip Technology Inc.

TABLE 3-5: SPECIAL FUNCTION REGISTER SUMMARY (CONTINUED)

Address	Name	Bit 7	Bit 6	Bit 5	Bit 4	Bit 3	Bit 2	Bit 1	Bit 0	Value on POR, BOR	Value on all other Resets
Bank 12											
60Ch to 610h	—	Unimplemented								—	—
611h	PWM1DCL	PWM1DCL<7:6>		—	—	—	—	—	—	00-- ----	00-- ----
612h	PWM1DCH	PWM1DCH<7:0>								xxxx xxxx	uuuu uuuu
613h	PWM1CON0	PWM1EN	PWM1OE	PWM1OUT	PWM1POL	—	—	—	—	0000 ----	0000 ----
614h	PWM2DCL	PWM2DCL<7:6>		—	—	—	—	—	—	00-- ----	00-- ----
615h	PWM2DCH	PWM2DCH<7:0>								xxxx xxxx	uuuu uuuu
616h	PWM2CON0	PWM2EN	PWM2OE	PWM2OUT	PWM2POL	—	—	—	—	0000 ----	0000 ----
617h	PWM3DCL	PWM3DCL<7:6>		—	—	—	—	—	—	00-- ----	00-- ----
618h	PWM3DCH	PWM3DCH<7:0>								xxxx xxxx	uuuu uuuu
619h	PWM3CON0	PWM3EN	PWM3OE	PWM3OUT	PWM3POL	—	—	—	—	0000 ----	0000 ----
61Ah	PWM4DCL	PWM4DCL<7:6>		—	—	—	—	—	—	00-- ----	00-- ----
61Bh	PWM4DCH	PWM4DCH<7:0>								xxxx xxxx	uuuu uuuu
61Ch	PWM4CON0	PWM4EN	PWM4OE	PWM4OUT	PWM4POL	—	—	—	—	0000 ----	0000 ----
61Dh to 61Fh	—	Unimplemented								—	—
Bank 13											
68Ch to 690h	—	Unimplemented								—	—
691h	CWG1DBR	—	—	CWG1DBR<5:0>						--00 0000	--00 0000
692h	CWG1DBF	—	—	CWG1DBF<5:0>						--xx xxxx	--xx xxxx
693h	CWG1CON0	G1EN	G1OEB	G1OEA	G1POLB	G1POLA	—	—	G1CS0	0000 0--0	0000 0--0
694h	CWG1CON1	G1ASDLB<1:0>		G1ASDLA<1:0>		—	G1IS<2:0>			0000 -000	0000 -000
695h	CWG1ASD	G1ASE	G1ARSEN	—	—	—	—	G1ASDSFLT	G1ASDSCLC2	00-- --00	00-- --00
696h to 69Fh	—	Unimplemented								—	—

Legend: x = unknown, u = unchanged, q = value depends on condition, - = unimplemented, r = reserved.
Shaded locations are unimplemented, read as '0'.

Note 1: PIC16F1507 only.
2: Unimplemented, read as '1'.

TABLE 3-5: SPECIAL FUNCTION REGISTER SUMMARY (CONTINUED)

Address	Name	Bit 7	Bit 6	Bit 5	Bit 4	Bit 3	Bit 2	Bit 1	Bit 0	Value on POR, BOR	Value on all other Resets
Banks 14-29											
x0Ch/ x8Ch — x1Fh/ x9Fh	—	Unimplemented								—	—
Bank 30											
F0Ch to F0Eh	—	Unimplemented								—	—
F0Fh	CLCDATA	—	—	—	—	—	—	PWM1POL	PWM1POL	---- --00	---- --00
F10h	CLC1CON	LC1EN	LC1OE	LC1OUT	LC1INTP	LC1INTN	LC1MODE<2:0>			0000 0000	0000 0000
F11h	CLC1POL	LC1POL	—	—	—	LC1G4POL	LC1G3POL	LC1G2POL	LC1G1POL	0--- xxxx	0--- uuuu
F12h	CLC1SEL0	—	LC1D2S<2:0>			—	LC1D1S<2:0>			-xxx -xxx	-uuu -uuu
F13h	CLC1SEL1	—	LC1D4S<2:0>			—	LC1D3S<2:0>			-xxx -xxx	-uuu -uuu
F14h	CLC1GLS0	LC1G1D4T	LC1G1D4N	LC1G1D3T	LC1G1D3N	LC1G1D2T	LC1G1D2N	LC1G1D1T	LC1G1D1N	xxxx xxxx	uuuu uuuu
F15h	CLC1GLS1	LC1G2D4T	LC1G2D4N	LC1G2D3T	LC1G2D3N	LC1G2D2T	LC1G2D2N	LC1G2D1T	LC1G2D1N	xxxx xxxx	uuuu uuuu
F16h	CLC1GLS2	LC1G3D4T	LC1G3D4N	LC1G3D3T	LC1G3D3N	LC1G3D2T	LC1G3D2N	LC1G3D1T	LC1G3D1N	xxxx xxxx	uuuu uuuu
F17h	CLC1GLS3	LC1G4D4T	LC1G4D4N	LC1G4D3T	LC1G4D3N	LC1G4D2T	LC1G4D2N	LC1G4D1T	LC1G4D1N	xxxx xxxx	uuuu uuuu
F18h	CLC2CON	LC2EN	LC2OE	LC2OUT	LC2INTP	LC2INTN	LC2MODE<2:0>			0000 0000	0000 0000
F19h	CLC2POL	LC2POL	—	—	—	LC2G4POL	LC2G3POL	LC2G2POL	LC2G1POL	0--- xxxx	0--- uuuu
F1Ah	CLC2SEL0	—	LC2D2S<2:0>			—	LC2D1S<2:0>			-xxx -xxx	-uuu -uuu
F1Bh	CLC2SEL1	—	LC2D4S<2:0>			—	LC2D3S<2:0>			-xxx -xxx	-uuu -uuu
F1Ch	CLC2GLS0	LC2G1D4T	LC2G1D4N	LC2G1D3T	LC2G1D3N	LC2G1D2T	LC2G1D2N	LC2G1D1T	LC2G1D1N	xxxx xxxx	uuuu uuuu
F1Dh	CLC2GLS1	LC2G2D4T	LC2G2D4N	LC2G2D3T	LC2G2D3N	LC2G2D2T	LC2G2D2N	LC2G2D1T	LC2G2D1N	xxxx xxxx	uuuu uuuu
F1Eh	CLC2GLS2	LC2G3D4T	LC2G3D4N	LC2G3D3T	LC2G3D3N	LC2G3D2T	LC2G3D2N	LC2G3D1T	LC2G3D1N	xxxx xxxx	uuuu uuuu
F1Fh	CLC2GLS3	LC2G4D4T	LC2G4D4N	LC2G4D3T	LC2G4D3N	LC2G4D2T	LC2G4D2N	LC2G4D1T	LC2G4D1N	xxxx xxxx	uuuu uuuu
F20h to F6Fh	—	Unimplemented								—	—

Legend: x = unknown, u = unchanged, q = value depends on condition, - = unimplemented, r = reserved.
Shaded locations are unimplemented, read as '0'.

Note 1: PIC16F1507 only.
2: Unimplemented, read as '1'.

© 2011 Microchip Technology Inc.

TABLE 3-5: SPECIAL FUNCTION REGISTER SUMMARY (CONTINUED)

Address	Name	Bit 7	Bit 6	Bit 5	Bit 4	Bit 3	Bit 2	Bit 1	Bit 0	Value on POR, BOR	Value on all other Resets
Bank 31											
F8Ch — FE3h	—	Unimplemented								—	—
FE4h	STATUS_SHAD	—	—	—	—	—	Z_SHAD	DC_SHAD	C_SHAD	---- -xxx	---- -uuu
FE5h	WREG_SHAD	Working Register Shadow								xxxx xxxx	uuuu uuuu
FE6h	BSR_SHAD	—	—	—	Bank Select Register Shadow					---x xxxx	---u uuuu
FE7h	PCLATH_SHAD	—	Program Counter Latch High Register Shadow							-xxx xxxx	uuuu uuuu
FE8h	FSR0L_SHAD	Indirect Data Memory Address 0 Low Pointer Shadow								xxxx xxxx	uuuu uuuu
FE9h	FSR0H_SHAD	Indirect Data Memory Address 0 High Pointer Shadow								xxxx xxxx	uuuu uuuu
FEAh	FSR1L_SHAD	Indirect Data Memory Address 1 Low Pointer Shadow								xxxx xxxx	uuuu uuuu
FEBh	FSR1H_SHAD	Indirect Data Memory Address 1 High Pointer Shadow								xxxx xxxx	uuuu uuuu
FECh	—	Unimplemented								—	—
FEDh	STKPTR	—	—	—	Current Stack pointer					---1 1111	---1 1111
FEEh	TOSL	Top-of-Stack Low byte								xxxx xxxx	uuuu uuuu
FEFh	TOSH	—	Top-of-Stack High byte							-xxx xxxx	-uuu uuuu

Legend: x = unknown, u = unchanged, q = value depends on condition, - = unimplemented, r = reserved.
Shaded locations are unimplemented, read as '0'.

Note 1: PIC16F1507 only.
2: Unimplemented, read as '1'.

3.3 PCL and PCLATH

The Program Counter (PC) is 15 bits wide. The low byte comes from the PCL register, which is a readable and writable register. The high byte (PC<14:8>) is not directly readable or writable and comes from PCLATH. On any Reset, the PC is cleared. Figure 3-3 shows the five situations for the loading of the PC.

FIGURE 3-3: LOADING OF PC IN DIFFERENT SITUATIONS

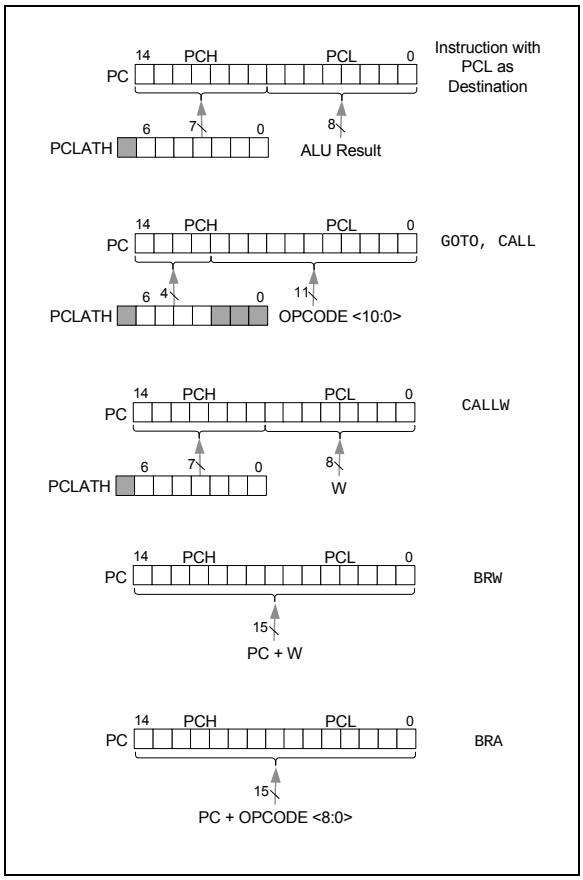

3.3.1 MODIFYING PCL

Executing any instruction with the PCL register as the destination simultaneously causes the Program Counter PC<14:8> bits (PCH) to be replaced by the contents of the PCLATH register. This allows the entire contents of the program counter to be changed by writing the desired upper 7 bits to the PCLATH register. When the lower 8 bits are written to the PCL register, all 15 bits of the program counter will change to the values contained in the PCLATH register and those being written to the PCL register.

3.3.2 COMPUTED GOTO

A computed GOTO is accomplished by adding an offset to the program counter (ADDWF PCL). When performing a table read using a computed GOTO method, care should be exercised if the table location crosses a PCL memory boundary (each 256-byte block). Refer to the Application Note AN556, *"Implementing a Table Read"* (DS00556).

3.3.3 COMPUTED FUNCTION CALLS

A computed function CALL allows programs to maintain tables of functions and provide another way to execute state machines or look-up tables. When performing a table read using a computed function CALL, care should be exercised if the table location crosses a PCL memory boundary (each 256-byte block).

If using the CALL instruction, the PCH<2:0> and PCL registers are loaded with the operand of the CALL instruction. PCH<6:3> is loaded with PCLATH<6:3>.

The CALLW instruction enables computed calls by combining PCLATH and W to form the destination address. A computed CALLW is accomplished by loading the W register with the desired address and executing CALLW. The PCL register is loaded with the value of W and PCH is loaded with PCLATH.

3.3.4 BRANCHING

The branching instructions add an offset to the PC. This allows relocatable code and code that crosses page boundaries. There are two forms of branching, BRW and BRA. The PC will have incremented to fetch the next instruction in both cases. When using either branching instruction, a PCL memory boundary may be crossed.

If using BRW, load the W register with the desired unsigned address and execute BRW. The entire PC will be loaded with the address PC + 1 + W.

If using BRA, the entire PC will be loaded with PC + 1 +, the signed value of the operand of the BRA instruction.

 © 2011 Microchip Technology Inc.

3.4 Stack

All devices have a 16-level x 15-bit wide hardware stack (refer to Figures 3-4 through 3-7). The stack space is not part of either program or data space. The PC is PUSHed onto the stack when CALL or CALLW instructions are executed or an interrupt causes a branch. The stack is POPed in the event of a RETURN, RETLW or a RETFIE instruction execution. PCLATH is not affected by a PUSH or POP operation.

The stack operates as a circular buffer if the STVREN bit is programmed to '0'(Configuration Words). This means that after the stack has been PUSHed sixteen times, the seventeenth PUSH overwrites the value that was stored from the first PUSH. The eighteenth PUSH overwrites the second PUSH (and so on). The STKOVF and STKUNF flag bits will be set on an Overflow/Underflow, regardless of whether the Reset is enabled.

Note 1:	There are no instructions/mnemonics called PUSH or POP. These are actions that occur from the execution of the CALL, CALLW, RETURN, RETLW and RETFIE instructions or the vectoring to an interrupt address.

3.4.1 ACCESSING THE STACK

The stack is available through the TOSH, TOSL and STKPTR registers. STKPTR is the current value of the Stack Pointer. TOSH:TOSL register pair points to the TOP of the stack. Both registers are read/writable. TOS is split into TOSH and TOSL due to the 15-bit size of the PC. To access the stack, adjust the value of STKPTR, which will position TOSH:TOSL, then read/write to TOSH:TOSL. STKPTR is 5 bits to allow detection of overflow and underflow.

Note:	Care should be taken when modifying the STKPTR while interrupts are enabled.

During normal program operation, CALL, CALLW and Interrupts will increment STKPTR while RETLW, RETURN, and RETFIE will decrement STKPTR. At any time STKPTR can be inspected to see how much stack is left. The STKPTR always points at the currently used place on the stack. Therefore, a CALL or CALLW will increment the STKPTR and then write the PC, and a return will unload the PC and then decrement the STKPTR.

Reference Figure 3-4 through Figure 3-7 for examples of accessing the stack.

FIGURE 3-4: ACCESSING THE STACK EXAMPLE 1

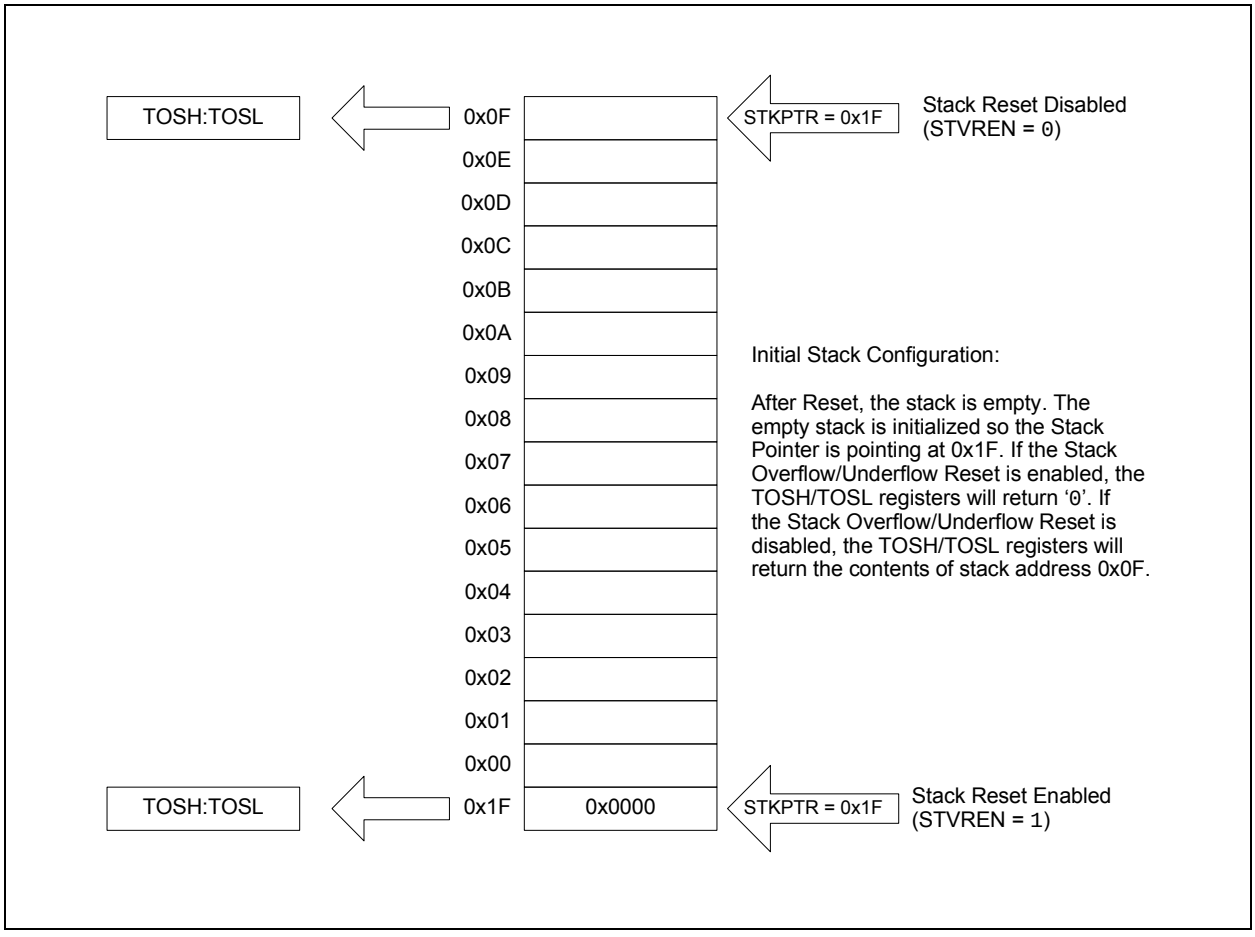

FIGURE 3-5: ACCESSING THE STACK EXAMPLE 2

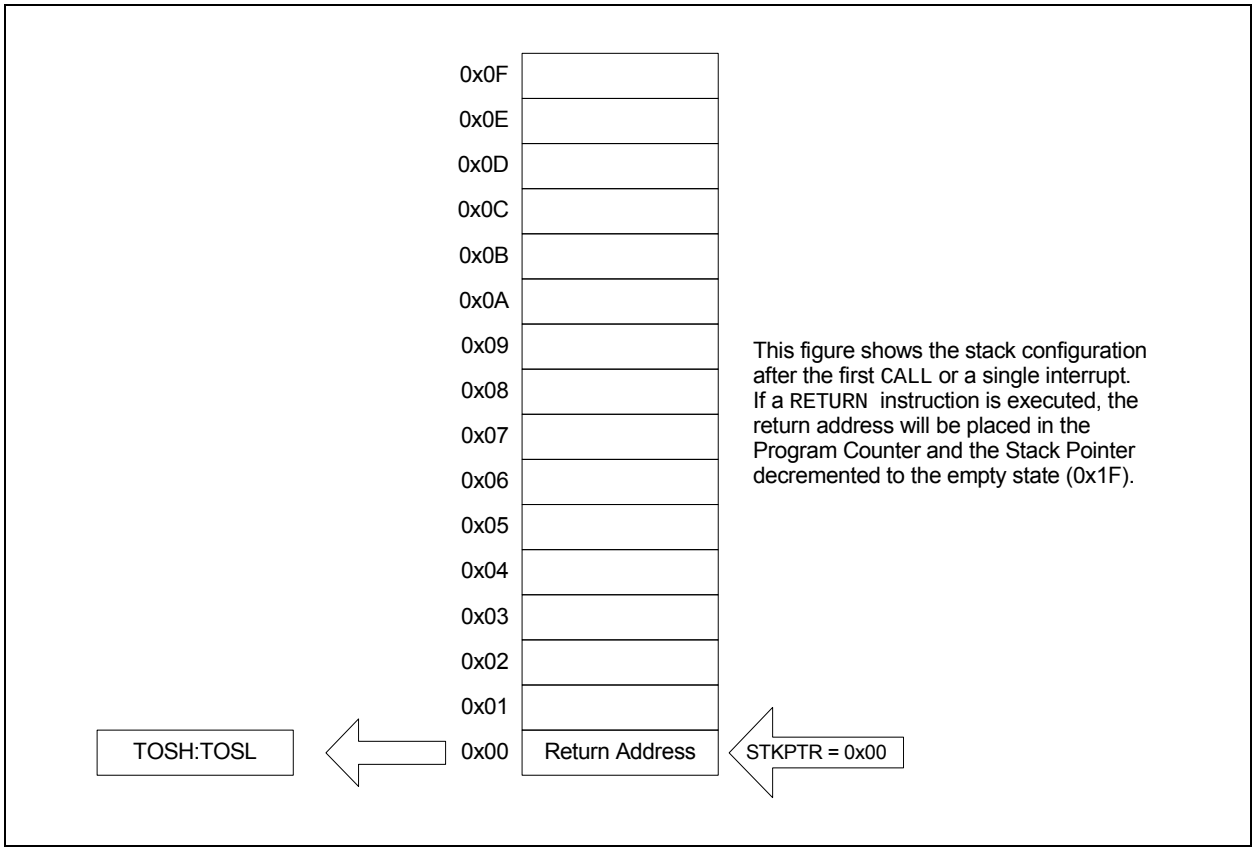

FIGURE 3-6: ACCESSING THE STACK EXAMPLE 3

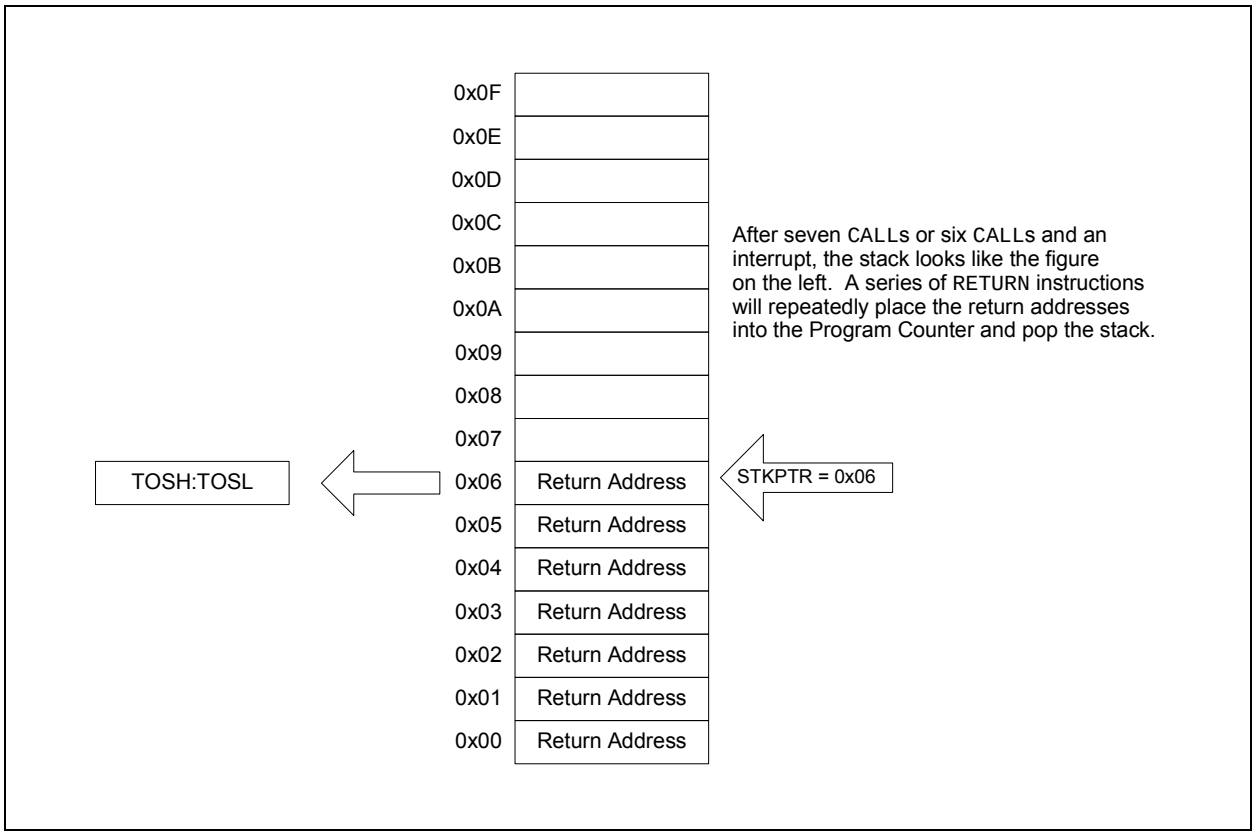

 © 2011 Microchip Technology Inc.

FIGURE 3-7: ACCESSING THE STACK EXAMPLE 4

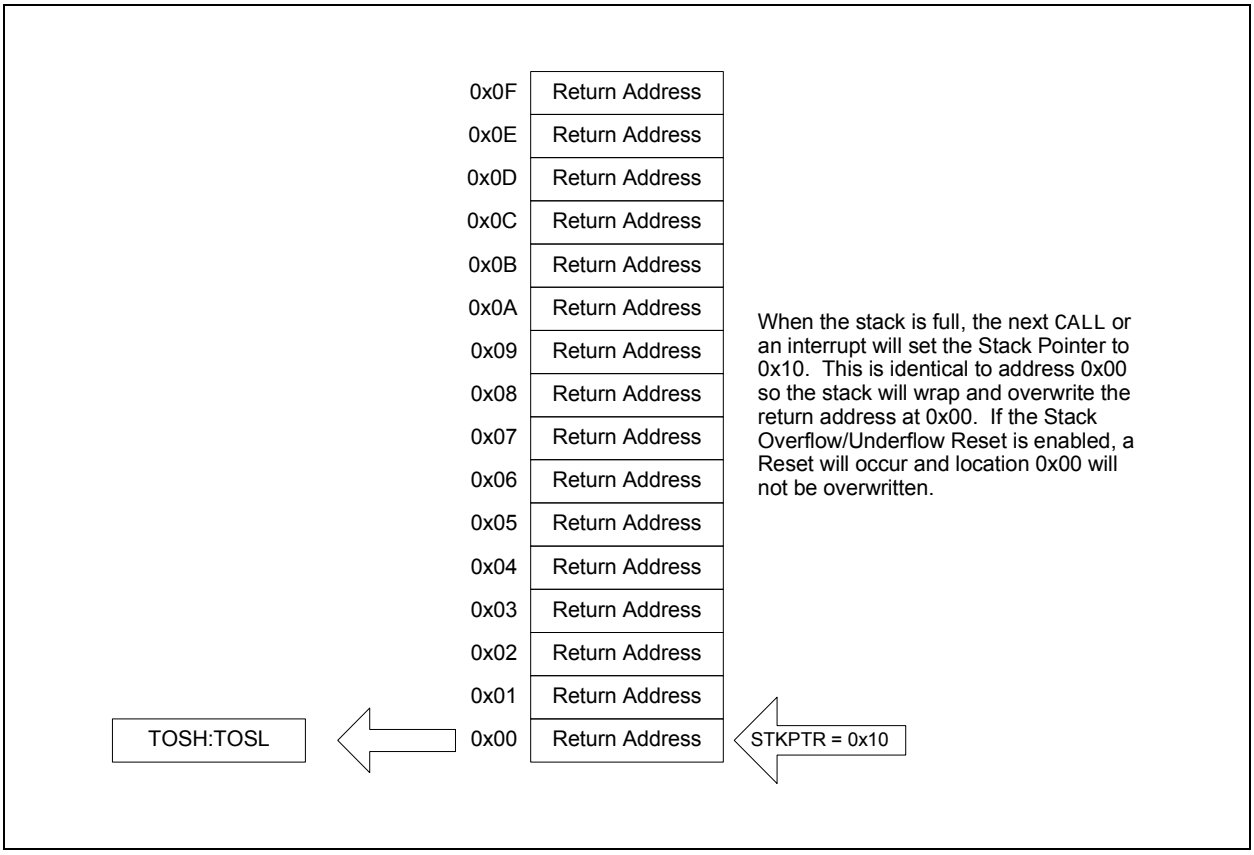

3.4.2 OVERFLOW/UNDERFLOW RESET

If the STVREN bit in Configuration Words is programmed to '1', the device will be reset if the stack is PUSHed beyond the sixteenth level or POPed beyond the first level, setting the appropriate bits (STKOVF or STKUNF, respectively) in the PCON register.

3.5 Indirect Addressing

The INDFn registers are not physical registers. Any instruction that accesses an INDFn register actually accesses the register at the address specified by the File Select Registers (FSR). If the FSRn address specifies one of the two INDFn registers, the read will return '0' and the write will not occur (though Status bits may be affected). The FSRn register value is created by the pair FSRnH and FSRnL.

The FSR registers form a 16-bit address that allows an addressing space with 65536 locations. These locations are divided into three memory regions:

- Traditional Data Memory
- Linear Data Memory
- Program Flash Memory

FIGURE 3-8: INDIRECT ADDRESSING

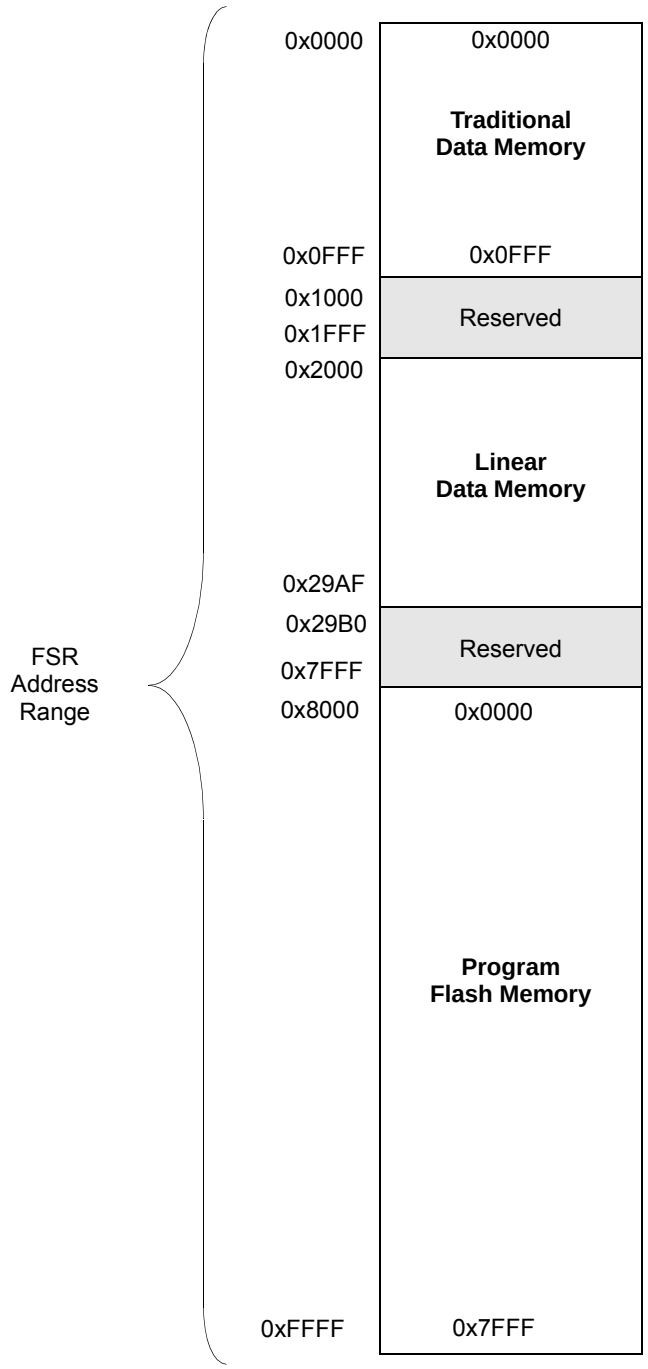

Note: Not all memory regions are completely implemented. Consult device memory tables for memory limits.

 © 2011 Microchip Technology Inc.

3.5.1 TRADITIONAL DATA MEMORY

The traditional data memory is a region from FSR address 0x000 to FSR address 0xFFF. The addresses correspond to the absolute addresses of all SFR, GPR and common registers.

FIGURE 3-9: TRADITIONAL DATA MEMORY MAP

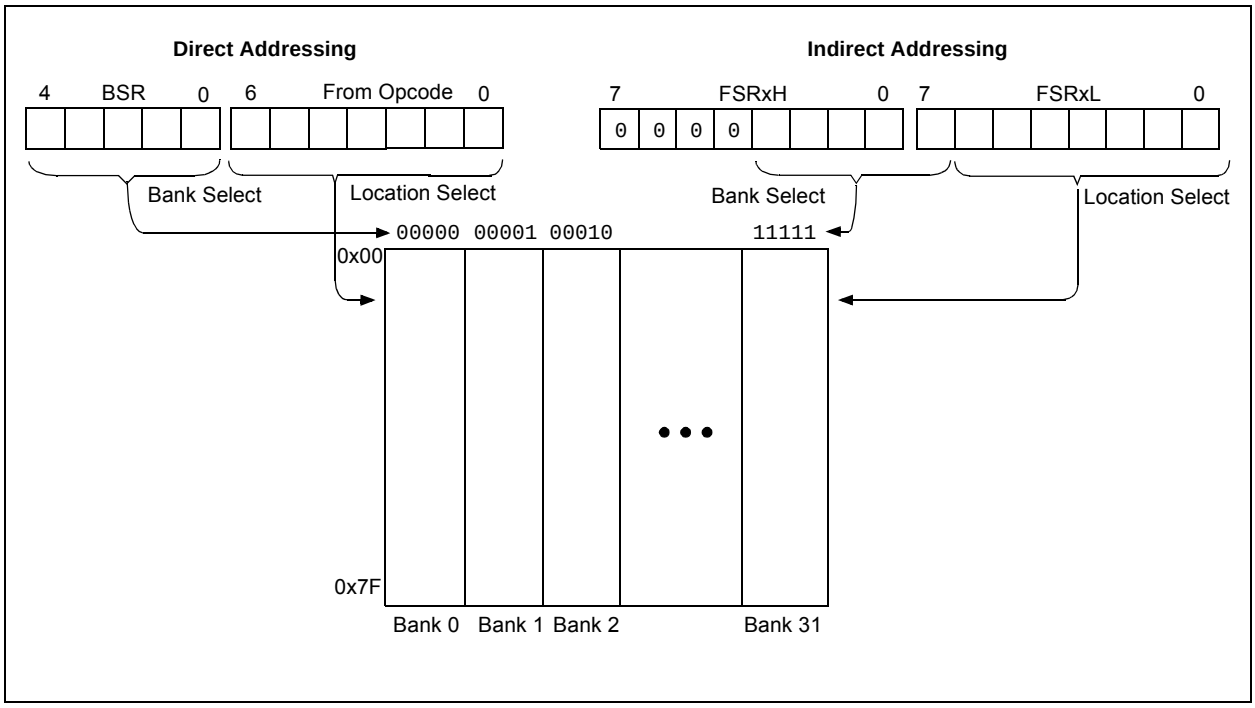

3.5.2 LINEAR DATA MEMORY

The linear data memory is the region from FSR address 0x2000 to FSR address 0x29AF. This region is a virtual region that points back to the 80-byte blocks of GPR memory in all the banks.

Unimplemented memory reads as 0x00. Use of the linear data memory region allows buffers to be larger than 80 bytes because incrementing the FSR beyond one bank will go directly to the GPR memory of the next bank.

The 16 bytes of common memory are not included in the linear data memory region.

FIGURE 3-10: LINEAR DATA MEMORY MAP

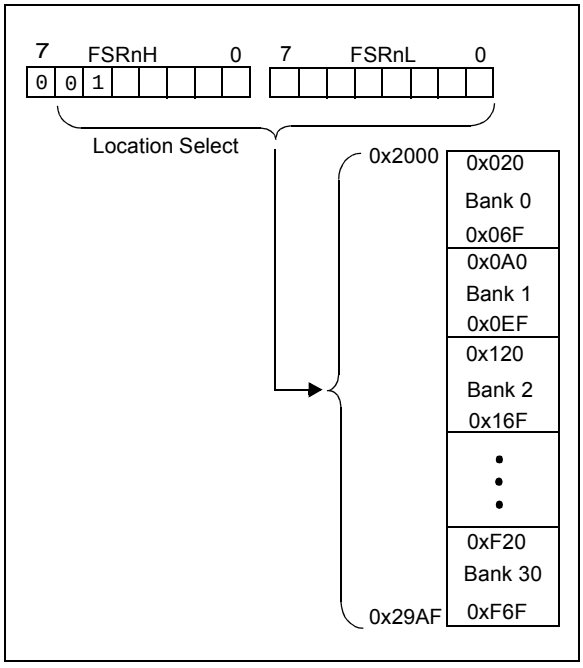

3.5.3 PROGRAM FLASH MEMORY

To make constant data access easier, the entire program Flash memory is mapped to the upper half of the FSR address space. When the MSB of FSRnH is set, the lower 15 bits are the address in program memory which will be accessed through INDF. Only the lower 8 bits of each memory location is accessible via INDF. Writing to the program Flash memory cannot be accomplished via the FSR/INDF interface. All instructions that access program Flash memory via the FSR/INDF interface will require one additional instruction cycle to complete.

FIGURE 3-11: PROGRAM FLASH MEMORY MAP

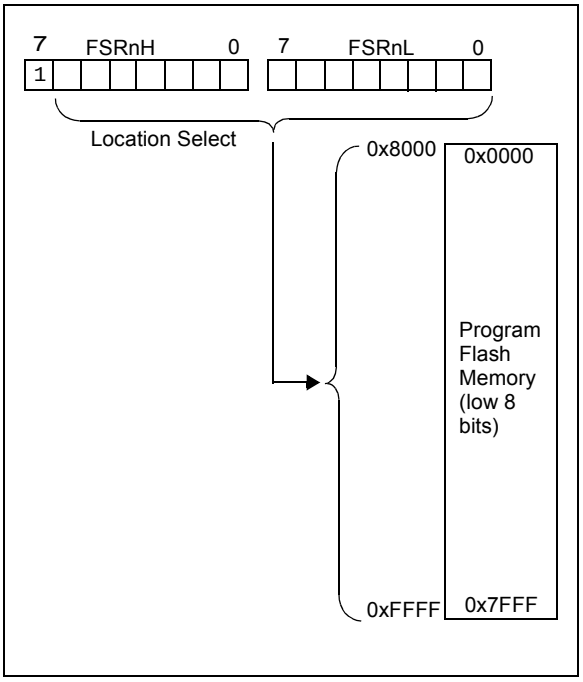

© 2011 Microchip Technology Inc.

NOTES:

4.0 DEVICE CONFIGURATION

Device Configuration consists of Configuration Words, Code Protection and Device ID.

4.1 Configuration Words

There are several Configuration Word bits that allow different oscillator and memory protection options. These are implemented as Configuration Word 1 at 8007h and Configuration Word 2 at 8008h.

 © 2011 Microchip Technology Inc.

REGISTER 4-1: CONFIGURATION WORD 1

U-1	U-1	R/P-1	R/P-1	R/P-1	U-1
—	—	$\overline{\text{CLKOUTEN}}$	BOREN<1:0>		—
bit 13					bit 8

R/P-1	R/P-1	R/P-1	R/P-1	R/P-1	U-1	R/P-1	R/P-1
$\overline{\text{CP}}$	MCLRE	$\overline{\text{PWRTE}}$	WDTE<1:0>		—	FOSC<1:0>	
bit 7							bit 0

Legend:		
R = Readable bit	P = Programmable bit	U = Unimplemented bit, read as '1'
'0' = Bit is cleared	'1' = Bit is set	-n = Value when blank or after Bulk Erase

bit 13-12 **Unimplemented:** Read as '1'

bit 11 **CLKOUTEN:** Clock Out Enable bit
1 = CLKOUT function is disabled. I/O function on the CLKOUT pin
0 = CLKOUT function is enabled on the CLKOUT pin

bit 10-9 **BOREN<1:0>:** Brown-out Reset Enable bits(1)
11 = BOR enabled
10 = BOR enabled during operation and disabled in Sleep
01 = BOR controlled by SBOREN bit of the BORCON register
00 = BOR disabled

bit 8 **Unimplemented:** Read as '1'

bit 7 **$\overline{\text{CP}}$:** Code Protection bit(2)
1 = Program memory code protection is disabled
0 = Program memory code protection is enabled

bit 6 **MCLRE:** $\overline{\text{MCLR}}$/VPP Pin Function Select bit
If LVP bit = 1:
This bit is ignored.
If LVP bit = 0:
1 = $\overline{\text{MCLR}}$/VPP pin function is $\overline{\text{MCLR}}$; Weak pull-up enabled.
0 = $\overline{\text{MCLR}}$/VPP pin function is digital input; $\overline{\text{MCLR}}$ internally disabled; Weak pull-up under control of WPUE3 bit.

bit 5 **$\overline{\text{PWRTE}}$:** Power-Up Timer Enable bit
1 = PWRT disabled
0 = PWRT enabled

bit 4-3 **WDTE<1:0>:** Watchdog Timer Enable bits
11 = WDT enabled
10 = WDT enabled while running and disabled in Sleep
01 = WDT controlled by the SWDTEN bit in the WDTCON register
00 = WDT disabled

bit 2 **Unimplemented:** Read as '1'

bit 1-0 **FOSC<1:0>:** Oscillator Selection bits
11 = ECH: External Clock, High-Power mode: on CLKIN pin
10 = ECM: External Clock, Medium-Power mode: on CLKIN pin
01 = ECL: External Clock, Low-Power mode: on CLKIN pin
00 = INTOSC oscillator: I/O function on CLKIN pin

Note 1: Enabling Brown-out Reset does not automatically enable Power-up Timer.
2: Once enabled, code-protect can only be disabled by bulk erasing the device.

REGISTER 4-2: CONFIG2: CONFIGURATION WORD 2

R/P-1	U-1	R/P-1	R/P-1	R/P-1	U-1
LVP	—	$\overline{\text{LPBOR}}$	BORV	STVREN	—
bit 13					bit 8

U-1	U-1	U-1	U-1	U-1	U-1	R/P-1	R/P-1
—	—	—	—	—	—	WRT<1:0>	
bit 7							bit 0

Legend:		
R = Readable bit	P = Programmable bit	U = Unimplemented bit, read as '1'
'0' = Bit is cleared	'1' = Bit is set	-n = Value when blank or after Bulk Erase

bit 13 **LVP:** Low-Voltage Programming Enable bit(1)
1 = Low-voltage programming enabled
0 = High-voltage on $\overline{\text{MCLR}}$ must be used for programming

bit 12 **Unimplemented:** Read as '1'

bit 11 **$\overline{\text{LPBOR}}$:** Low-Power BOR Enable bit
1 = Low-Power Brown-out Reset is disabled
0 = Low-Power Brown-out Reset is enabled

bit 10 **BORV:** Brown-Out Reset Voltage Selection bit
1 = Brown-out Reset voltage set to:
1.9V (PIC16LF1507)
2.4V (PIC16F1507), typical
0 = Brown-out Reset voltage set to 2.7V (typical)

bit 9 **STVREN:** Stack Overflow/Underflow Reset Enable bit
1 = Stack Overflow or Underflow will cause a Reset
0 = Stack Overflow or Underflow will not cause a Reset

bit 8-2 **Unimplemented:** Read as '1'

bit 1-0 **WRT<1:0>:** Flash Memory Self-Write Protection bits
2 kW Flash memory:
11 = Write protection off
10 = 000h to 1FFh write-protected, 200h to 7FFh may be modified
01 = 000h to 3FFh write-protected, 400h to 7FFh may be modified
00 = 000h to 7FFh write-protected, no addresses may be modified

Note 1: The LVP bit cannot be programmed to '0' when Programming mode is entered via LVP.

© 2011 Microchip Technology Inc.

4.2 Code Protection

Code protection allows the device to be protected from unauthorized access. Internal access to the program memory is unaffected by any code protection setting.

4.2.1 PROGRAM MEMORY PROTECTION

The entire program memory space is protected from external reads and writes by the $\overline{CP}$ bit in Configuration Words. When $\overline{CP}$ = 0, external reads and writes of program memory are inhibited and a read will return all '0's. The CPU can continue to read program memory, regardless of the protection bit settings. Writing the program memory is dependent upon the write protection setting. See **Section 4.3 "Write Protection"** for more information.

4.3 Write Protection

Write protection allows the device to be protected from unintended self-writes. Applications, such as bootloader software, can be protected while allowing other regions of the program memory to be modified.

The WRT<1:0> bits in Configuration Words define the size of the program memory block that is protected.

4.4 User ID

Four memory locations (8000h-8003h) are designated as ID locations where the user can store checksum or other code identification numbers. These locations are readable and writable during normal execution. See **Section 10.4 "User ID, Device ID and Configuration Word Access"** for more information on accessing these memory locations. For more information on checksum calculation, see the **"***PIC12(L)F1501/PIC16(L)F150X Memory Programming Specification*" (DS41573).

4.5 Device ID and Revision ID

The memory location 8006h is where the Device ID and Revision ID are stored. The upper nine bits hold the Device ID. The lower five bits hold the Revision ID. See **Section 10.4 "User ID, Device ID and Configuration Word Access"** for more information on accessing these memory locations.

Development tools, such as device programmers and debuggers, may be used to read the Device ID and Revision ID.

REGISTER 4-3: DEVICEID: DEVICE ID REGISTER

R	R	R	R	R	R
DEV<8:3>					
bit 13					bit 8

R	R	R	R	R	R	R	R
DEV<2:0>			REV<4:0>				
bit 7							bit 0

Legend:		
R = Readable bit	W = Writable bit	U = Unimplemented bit, read as '1'
u = Bit is unchanged	x = Bit is unknown	-n/n = Value at POR and BOR/Value at all other Resets
'1' = Bit is set	'0' = Bit is cleared	P = Programmable bit

bit 13-5 **DEV<8:0>:** Device ID bits

Device	DEVICEID<13:0> Values	
	DEV<8:0>	REV<4:0>
PIC16F1507	10 1101 000	x xxxx
PIC16LF1507	10 1101 110	x xxxx

bit 4-0 **REV<4:0>:** Revision ID bits
These bits are used to identify the revision (see Table under DEV<8:0> above).

 © 2011 Microchip Technology Inc.

NOTES:

5.0 OSCILLATOR MODULE

5.1 Overview

The oscillator module has a wide variety of clock sources and selection features that allow it to be used in a wide range of applications while maximizing performance and minimizing power consumption. Figure 5-1 illustrates a block diagram of the oscillator module.

The oscillator module can be configured in one of the following clock modes.

1. ECL – External Clock Low-Power mode (0 MHz to 0.5 MHz)
2. ECM – External Clock Medium-Power mode (0.5 MHz to 4 MHz)
3. ECH – External Clock High-Power mode (4 MHz to 20 MHz)
4. INTOSC – Internal oscillator (31 kHz to 16 MHz).

Clock Source modes are selected by the FOSC<1:0> bits in the Configuration Words. The FOSC bits determine the type of oscillator that will be used when the device is first powered.

The EC clock mode relies on an external logic level signal as the device clock source.

The INTOSC internal oscillator block produces low and high frequency clock sources, designated LFINTOSC and HFINTOSC. (see Internal Oscillator Block, Figure 5-1). A wide selection of device clock frequencies may be derived from these clock sources.

FIGURE 5-1: SIMPLIFIED PIC® MCU CLOCK SOURCE BLOCK DIAGRAM

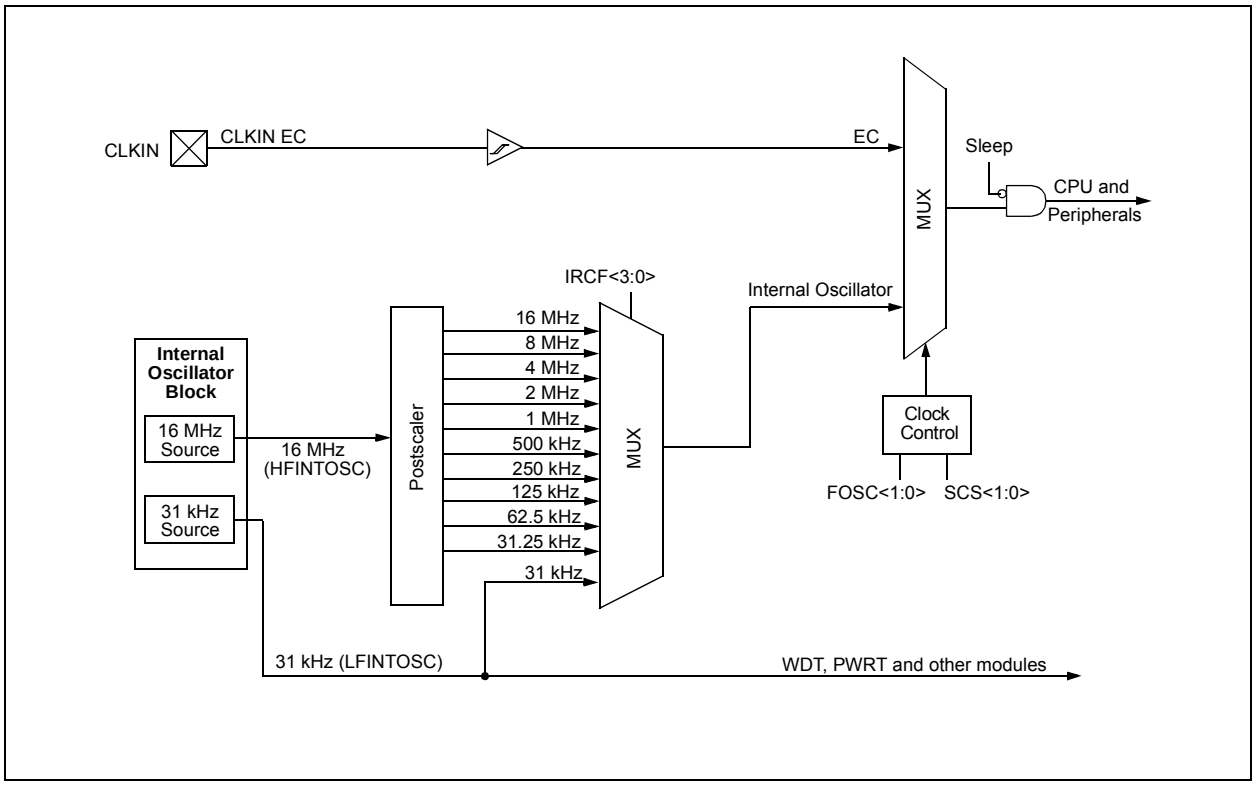

© 2011 Microchip Technology Inc.

5.2 Clock Source Types

Clock sources can be classified as external or internal.

External clock sources rely on external circuitry for the clock source to function. Examples are: oscillator modules (EC mode).

Internal clock sources are contained within the oscillator module. The oscillator block has two internal oscillators that are used to generate two system clock sources: the 16 MHz High-Frequency Internal Oscillator (HFINTOSC) and the 31 kHz Low-Frequency Internal Oscillator (LFINTOSC).

The system clock can be selected between external or internal clock sources via the System Clock Select (SCS) bits in the OSCCON register. See **Section 5.3 "Clock Switching"** for additional information.

5.2.1 EXTERNAL CLOCK SOURCES

An external clock source can be used as the device system clock by performing one of the following actions:

- Program the FOSC<1:0> bits in the Configuration Words to select an external clock source that will be used as the default system clock upon a device Reset.
- Clear the SCS<1:0> bits in the OSCCON register to switch the system clock source to:
  - An external clock source determined by the value of the FOSC bits.

See **Section 5.3 "Clock Switching"**for more information.

5.2.1.1 EC Mode

The External Clock (EC) mode allows an externally generated logic level signal to be the system clock source. When operating in this mode, an external clock source is connected to the CLKIN input. CLKOUT is available for general purpose I/O or CLKOUT. Figure 5-2 shows the pin connections for EC mode.

EC mode has 3 power modes to select from through Configuration Words:

- High power, 4-20 MHz (FOSC = 11)
- Medium power, 0.5-4 MHz (FOSC = 10)
- Low power, 0-0.5 MHz (FOSC = 01)

When EC mode is selected, there is no delay in operation after a Power-on Reset (POR) or wake-up from Sleep. Because the PIC® MCU design is fully static, stopping the external clock input will have the effect of halting the device while leaving all data intact. Upon restarting the external clock, the device will resume operation as if no time had elapsed.

FIGURE 5-2: EXTERNAL CLOCK (EC) MODE OPERATION

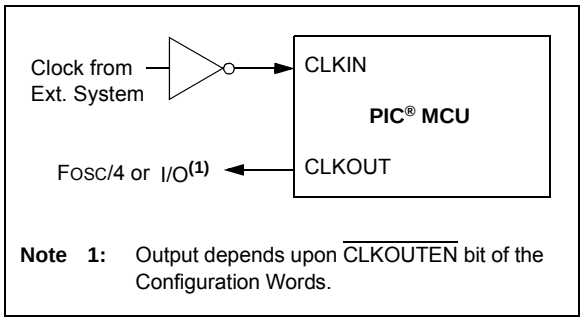

Note 1: Output depends upon $\overline{\text{CLKOUTEN}}$ bit of the Configuration Words.

5.2.2 INTERNAL CLOCK SOURCES

The device may be configured to use the internal oscillator block as the system clock by performing one of the following actions:

- Program the FOSC<1:0> bits in Configuration Words to select the INTOSC clock source, which will be used as the default system clock upon a device Reset.
- Write the SCS<1:0> bits in the OSCCON register to switch the system clock source to the internal oscillator during run-time. See **Section 5.3 "Clock Switching"**for more information.

In **INTOSC** mode, CLKIN is available for general purpose I/O. CLKOUT is available for general purpose I/O or CLKOUT.

The function of the CLKOUT pin is determined by the CLKOUTEN bit in Configuration Words.

The internal oscillator block has two independent oscillators clock sources.

1. The **HFINTOSC** (High-Frequency Internal Oscillator) is factory calibrated and operates at 16 MHz.
2. The **LFINTOSC** (Low-Frequency Internal Oscillator) is uncalibrated and operates at 31 kHz.

5.2.2.1 HFINTOSC

The High-Frequency Internal Oscillator (HFINTOSC) is a factory calibrated 16 MHz internal clock source.

The outputs of the HFINTOSC connects to a prescaler and multiplexer (see Figure 5-1). One of multiple frequencies derived from the HFINTOSC can be selected via software using the IRCF<3:0> bits of the OSCCON register. See **Section 5.2.2.4 "Internal Oscillator Clock Switch Timing"** for more information.

The HFINTOSC is enabled by:

- Configure the IRCF<3:0> bits of the OSCCON register for the desired HF frequency, and
- FOSC<1:0> = 00, or
- Set the System Clock Source (SCS) bits of the OSCCON register to '1x'.

A fast start-up oscillator allows internal circuits to power up and stabilize before switching to HFINTOSC.

The High-Frequency Internal Oscillator Ready bit (HFIOFR) of the OSCSTAT register indicates when the HFINTOSC is running.

The High-Frequency Internal Oscillator Stable bit (HFIOFS) of the OSCSTAT register indicates when the HFINTOSC is running within 0.5% of its final value.

5.2.2.2 LFINTOSC

The Low-Frequency Internal Oscillator (LFINTOSC) is an uncalibrated 31 kHz internal clock source.

The output of the LFINTOSC connects to a multiplexer (see Figure 5-1). Select 31 kHz, via software, using the IRCF<3:0> bits of the OSCCON register. See **Section 5.2.2.4 "Internal Oscillator Clock Switch Timing"** for more information. The LFINTOSC is also the frequency for the Power-up Timer (PWRT) and Watchdog Timer (WDT).

The LFINTOSC is enabled by selecting 31 kHz (IRCF<3:0> bits of the OSCCON register = 000x) as the system clock source (SCS bits of the OSCCON register = 1x), or when any of the following are enabled:

- Configure the IRCF<3:0> bits of the OSCCON register for the desired LF frequency, and
- FOSC<1:0> = 00, or
- Set the System Clock Source (SCS) bits of the OSCCON register to '1x'

Peripherals that use the LFINTOSC are:

- Power-up Timer (PWRT)
- Watchdog Timer (WDT)

The Low-Frequency Internal Oscillator Ready bit (LFIOFR) of the OSCSTAT register indicates when the LFINTOSC is running.

 © 2011 Microchip Technology Inc.

5.2.2.3 Internal Oscillator Frequency Selection

The system clock speed can be selected via software using the Internal Oscillator Frequency Select bits IRCF<3:0> of the OSCCON register.

The outputs of the 16 MHz HFINTOSC postscaler and the LFINTOSC connect to a multiplexer (see Figure 5-1). The Internal Oscillator Frequency Select bits IRCF<3:0> of the OSCCON register select the frequency output of the internal oscillators. One of the following frequencies can be selected via software:

- HFINTOSC
  - 16 MHz
  - 8 MHz
  - 4 MHz
  - 2 MHz
  - 1 MHz
  - 500 kHz (Default after Reset)
  - 250 kHz
  - 125 kHz
  - 62.5 kHz
  - 31.25 kHz
- LFINTOSC
  - 31 kHz

Note:	Following any Reset, the IRCF<3:0> bits of the OSCCON register are set to '0111' and the frequency selection is set to 500 kHz. The user can modify the IRCF bits to select a different frequency.

The IRCF<3:0> bits of the OSCCON register allow duplicate selections for some frequencies. These duplicate choices can offer system design trade-offs. Lower power consumption can be obtained when changing oscillator sources for a given frequency. Faster transition times can be obtained between frequency changes that use the same oscillator source.

5.2.2.4 Internal Oscillator Clock Switch Timing

When switching between the HFINTOSC and the LFINTOSC, the new oscillator may already be shut down to save power (see Figure 5-3). If this is the case, there is a delay after the IRCF<3:0> bits of the OSCCON register are modified before the frequency selection takes place. The OSCSTAT register will reflect the current active status of the HFINTOSC and LFINTOSC oscillators. The sequence of a frequency selection is as follows:

1. IRCF<3:0> bits of the OSCCON register are modified.
2. If the new clock is shut down, a clock start-up delay is started.
3. Clock switch circuitry waits for a falling edge of the current clock.
4. Clock switch is complete.

See Figure 5-3 for more details.

If the internal oscillator speed is switched between two clocks of the same source, there is no start-up delay before the new frequency is selected.

Start-up delay specifications are located in the oscillator tables of **Section 25.0 "Electrical Specifications"**

FIGURE 5-3: INTERNAL OSCILLATOR SWITCH TIMING

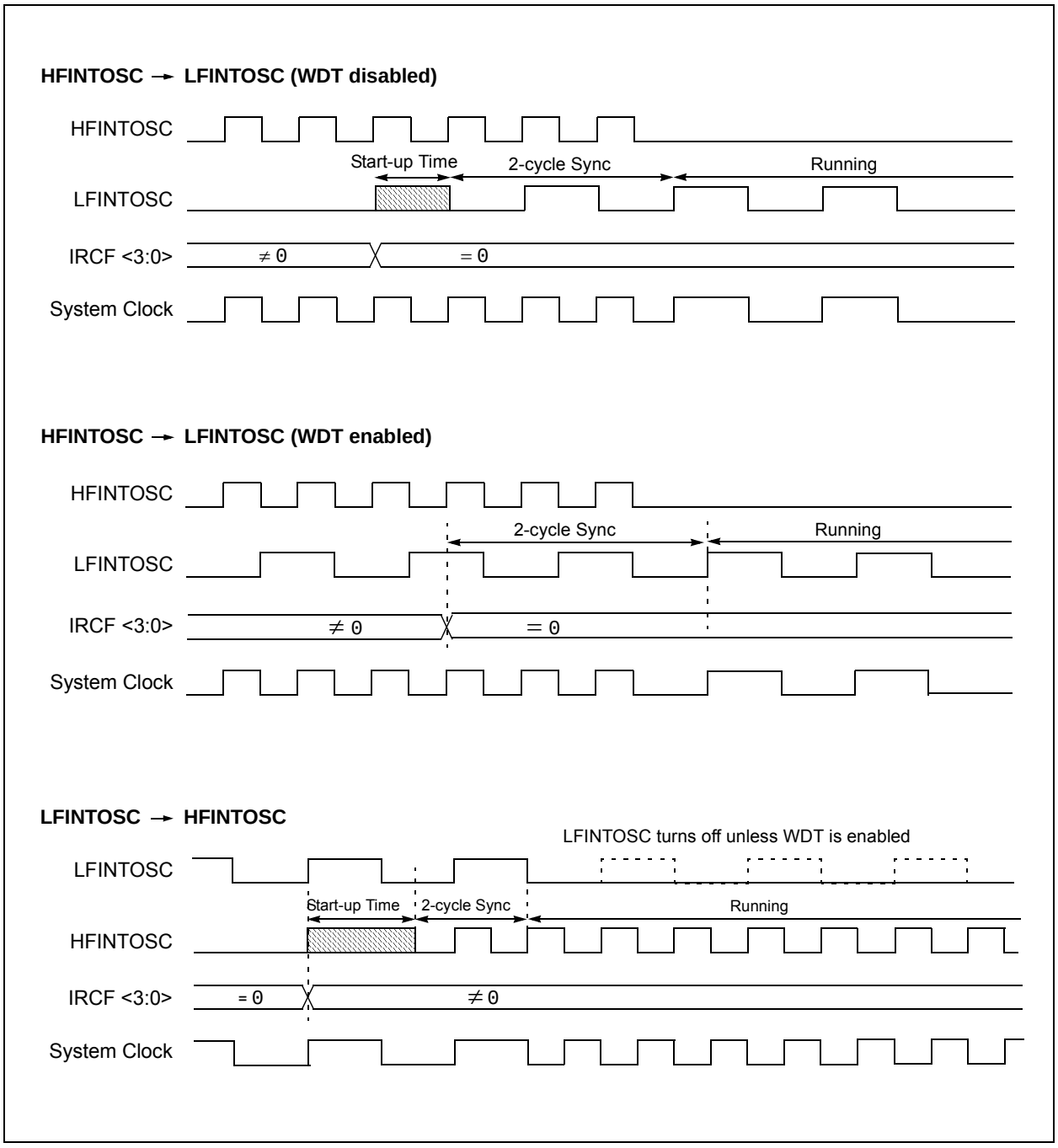

 © 2011 Microchip Technology Inc.

5.3 Clock Switching

The system clock source can be switched between external and internal clock sources via software using the System Clock Select (SCS) bits of the OSCCON register. The following clock sources can be selected using the SCS bits:

- Default system oscillator determined by FOSC bits in Configuration Words
- Internal Oscillator Block (INTOSC)

5.3.1 SYSTEM CLOCK SELECT (SCS) BITS

The System Clock Select (SCS) bits of the OSCCON register selects the system clock source that is used for the CPU and peripherals.

- When the SCS bits of the OSCCON register = 00, the system clock source is determined by value of the FOSC<1:0> bits in the Configuration Words.
- When the SCS bits of the OSCCON register = 1x, the system clock source is chosen by the internal oscillator frequency selected by the IRCF<3:0> bits of the OSCCON register. After a Reset, the SCS bits of the OSCCON register are always cleared.

When switching between clock sources, a delay is required to allow the new clock to stabilize. These oscillator delays are shown in Table 5-2.

TABLE 5-1: OSCILLATOR SWITCHING DELAYS

Switch From	Switch To	Frequency	Oscillator Delay
Sleep/POR	LFINTOSC HFINTOSC	31 kHz 31.25 kHz-16 MHz	Oscillator Warm-up Delay (TWARM)
Sleep/POR	EC	DC – 20 MHz	2 cycles
LFINTOSC	EC	DC – 20 MHz	1 cycle of each
Any clock source	HFINTOSC	31.25 kHz-16 MHz	2 μs (typical)
Any clock source	LFINTOSC	31 kHz	1 cycle of each

5.4 Oscillator Control Registers

REGISTER 5-1: OSCCON: OSCILLATOR CONTROL REGISTER

U-0	R/W-0/0	R/W-1/1	R/W-1/1	R/W-1/1	U-0	R/W-0/0	R/W-0/0
—	IRCF<3:0>				—	SCS<1:0>	
bit 7							bit 0

Legend:		
R = Readable bit	W = Writable bit	U = Unimplemented bit, read as ‘0’
u = Bit is unchanged	x = Bit is unknown	-n/n = Value at POR and BOR/Value at all other Resets
‘1’ = Bit is set	‘0’ = Bit is cleared	

bit 7 **Unimplemented:** Read as ‘0’

bit 6-3 **IRCF<3:0>:** Internal Oscillator Frequency Select bits
1111 = 16 MHz
1110 = 8 MHz
1101 = 4 MHz
1100 = 2 MHz
1011 = 1 MHz
1010 = 500 kHz(1)
1001 = 250 kHz(1)
1000 = 125 kHz(1)
0111 = 500 kHz (default upon Reset)
0110 = 250 kHz
0101 = 125 kHz
0100 = 62.5 kHz
001x = 31.25 kHz
000x = 31 kHz (LFINTOSC)

bit 2 **Unimplemented:** Read as ‘0’

bit 1-0 **SCS<1:0>:** System Clock Select bits
1x = Internal oscillator block
01 = Reserved
00 = Clock determined by FOSC<1:0> in Configuration Words.

Note 1: Duplicate frequency derived from HFINTOSC.

 © 2011 Microchip Technology Inc.

REGISTER 5-2: OSCSTAT: OSCILLATOR STATUS REGISTER

U-0	U-0	U-0	R-0/q	U-0	U-0	R-0/q	R-0/q
—	—	—	HFIOFR	—	—	LFIOFR	HFIOFS
bit 7							bit 0

Legend:		
R = Readable bit	W = Writable bit	U = Unimplemented bit, read as ‘0’
u = Bit is unchanged	x = Bit is unknown	-n/n = Value at POR and BOR/Value at all other Resets
‘1’ = Bit is set	‘0’ = Bit is cleared	q = Conditional

bit 7-5 **Unimplemented:** Read as ‘0’

bit 4 **HFIOFR:** High Frequency Internal Oscillator Ready bit
1 = 16 MHz Internal Oscillator (HFINTOSC) is ready
0 = 16 MHz Internal Oscillator (HFINTOSC) is not ready

bit 3-2 **Unimplemented:** Read as ‘0’

bit 1 **LFIOFR:** Low Frequency Internal Oscillator Ready bit
1 = 31 kHz Internal Oscillator (LFINTOSC) is ready
0 = 31 kHz Internal Oscillator (LFINTOSC) is not ready

bit 0 **HFIOFS:** High Frequency Internal Oscillator Stable bit
1 = 16 MHz Internal Oscillator (HFINTOSC) is stable
0 = 16 MHz Internal Oscillator (HFINTOSC) is not yet stable.

TABLE 5-2: SUMMARY OF REGISTERS ASSOCIATED WITH CLOCK SOURCES

Name	Bit 7	Bit 6	Bit 5	Bit 4	Bit 3	Bit 2	Bit 1	Bit 0	Register on Page
OSCCON	—	IRCF<3:0>				—	SCS<1:0>		51
OSCSTAT	—	—	—	HFIOFR	—	—	LFIOFR	HFIOFS	52

Legend: — = unimplemented location, read as ‘0’. Shaded cells are not used by clock sources.

TABLE 5-3: SUMMARY OF CONFIGURATION WORD WITH CLOCK SOURCES

Name	Bits	Bit -/7	Bit -/6	Bit 13/5	Bit 12/4	Bit 11/3	Bit 10/2	Bit 9/1	Bit 8/0	Register on Page
CONFIG1	13:8	—	—	—	—	$\overline{\text{CLKOUTEN}}$	BOREN<1:0>		—	40
	7:0	$\overline{\text{CP}}$	MCLRE	$\overline{\text{PWRTE}}$	WDTE<1:0>		—	FOSC<1:0>		

Legend: — = unimplemented location, read as ‘0’. Shaded cells are not used by clock sources.

6.0 RESETS

There are multiple ways to reset this device:

- Power-on Reset (POR)
- Brown-out Reset (BOR)
- Low-Power Brown-out Reset (LPBOR)
- $\overline{\text{MCLR}}$ Reset
- WDT Reset
- RESET instruction
- Stack Overflow
- Stack Underflow
- Programming mode exit

To allow VDD to stabilize, an optional Power-up Timer can be enabled to extend the Reset time after a BOR or POR event.

A simplified block diagram of the On-Chip Reset Circuit is shown in Figure 6-1.

FIGURE 6-1: SIMPLIFIED BLOCK DIAGRAM OF ON-CHIP RESET CIRCUIT

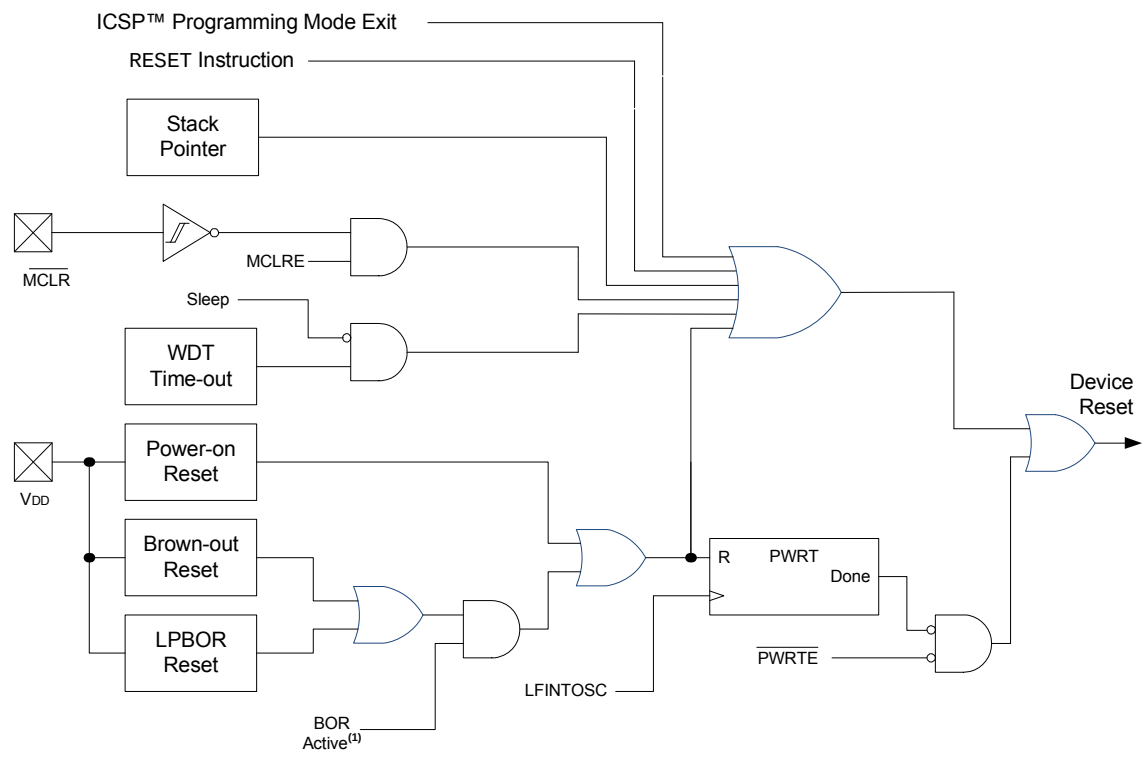

Note 1: See Table 6-1 for BOR active conditions.

 © 2011 Microchip Technology Inc.

6.1 Power-on Reset (POR)

The POR circuit holds the device in Reset until VDD has reached an acceptable level for minimum operation. Slow rising VDD, fast operating speeds or analog performance may require greater than minimum VDD. The PWRT, BOR or MCLR features can be used to extend the start-up period until all device operation conditions have been met.

6.1.1 POWER-UP TIMER (PWRT)

The Power-up Timer provides a nominal 64 ms time-out on POR or Brown-out Reset.

The device is held in Reset as long as PWRT is active. The PWRT delay allows additional time for the VDD to rise to an acceptable level. The Power-up Timer is enabled by clearing the PWRTE bit in Configuration Words.

The Power-up Timer starts after the release of the POR and BOR.

For additional information, refer to Application Note AN607, *"Power-up Trouble Shooting"* (DS00607).

6.2 Brown-Out Reset (BOR)

The BOR circuit holds the device in Reset when VDD reaches a selectable minimum level. Between the POR and BOR, complete voltage range coverage for execution protection can be implemented.

The Brown-out Reset module has four operating modes controlled by the BOREN<1:0> bits in Configuration Words. The four operating modes are:

- BOR is always on
- BOR is off when in Sleep
- BOR is controlled by software
- BOR is always off

Refer to Table 6-1 for more information.

The Brown-out Reset voltage level is selectable by configuring the BORV bit in Configuration Words.

A VDD noise rejection filter prevents the BOR from triggering on small events. If VDD falls below VBOR for a duration greater than parameter TBORDC, the device will reset. See Figure 6-2 for more information.

TABLE 6-1: BOR OPERATING MODES

BOREN<1:0>	SBOREN	Device Mode	BOR Mode	Instruction Exection upon: Release of POR or Wake-up from Sleep
11	X	X	Active	Waits for BOR ready(1) (BORRDY = 1)
10	X	Awake	Active	Waits for BOR ready (BORRDY = 1)
		Sleep	Disabled	
01	1	X	Active	Waits for BOR ready(1) (BORRDY = 1)
	0	X	Disabled	Begins immediately (BORRDY = x)
00	X	X	Disabled	

Note 1: In these specific cases, "release of POR" and "wake-up from Sleep," there is no delay in start-up. The BOR ready flag, (BORRDY = 1), will be set before the CPU is ready to execute instructions because the BOR circuit is forced on by the BOREN<1:0> bits.

6.2.1 BOR IS ALWAYS ON

When the BOREN bits of Configuration Words are programmed to '11', the BOR is always on. The device start-up will be delayed until the BOR is ready and VDD is higher than the BOR threshold.

BOR protection is active during Sleep. The BOR does not delay wake-up from Sleep.

6.2.2 BOR IS OFF IN SLEEP

When the BOREN bits of Configuration Words are programmed to '10', the BOR is on, except in Sleep. The device start-up will be delayed until the BOR is ready and VDD is higher than the BOR threshold.

BOR protection is not active during Sleep. The device wake-up will be delayed until the BOR is ready.

6.2.3 BOR CONTROLLED BY SOFTWARE

When the BOREN bits of Configuration Words are programmed to '01', the BOR is controlled by the SBOREN bit of the BORCON register. The device start-up is not delayed by the BOR ready condition or the VDD level.

BOR protection begins as soon as the BOR circuit is ready. The status of the BOR circuit is reflected in the BORRDY bit of the BORCON register.

BOR protection is unchanged by Sleep.

FIGURE 6-2: BROWN-OUT SITUATIONS

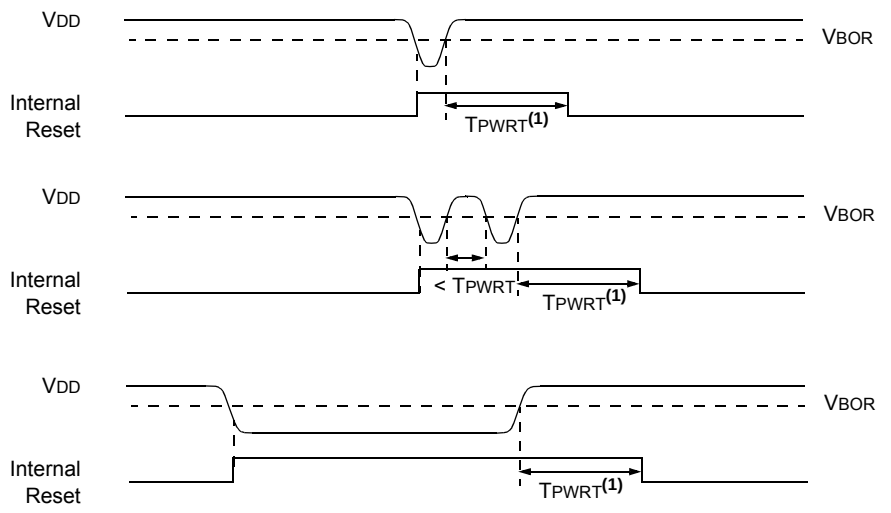

Note 1: TPWRT delay only if $\overline{\text{PWRTE}}$ bit is programmed to '0'.

REGISTER 6-1: BORCON: BROWN-OUT RESET CONTROL REGISTER

R/W-1/u	R/W-0/u	U-0	U-0	U-0	U-0	U-0	R-q/u
SBOREN	BORFS	—	—	—	—	—	BORRDY
bit 7							bit 0

Legend:		
R = Readable bit	W = Writable bit	U = Unimplemented bit, read as '0'
u = Bit is unchanged	x = Bit is unknown	-n/n = Value at POR and BOR/Value at all other Resets
'1' = Bit is set	'0' = Bit is cleared	q = Value depends on condition

bit 7 **SBOREN:** Software Brown-out Reset Enable bit
If BOREN <1:0> in Configuration Words ≠ 01:
SBOREN is read/write, but has no effect on the BOR.
If BOREN <1:0> in Configuration Words = 01:
1 = BOR Enabled
0 = BOR Disabled

bit 6 **BORFS:** Brown-out Reset Fast Start bit(1)
If BOREN<1:0> = 11 (Always on) or BOREN<1:0> = 00 (Always off)
BORFS is Read/Write, but has no effect.
If BOREN <1:0> = 10 (Disabled in Sleep) or BOREN<1:0> = 01 (Under software control):
1 = Band gap is forced on always (covers sleep/wake-up/operating cases)
0 = Band gap operates normally, and may turn off

bit 5-1 **Unimplemented:** Read as '0'

bit 0 **BORRDY:** Brown-out Reset Circuit Ready Status bit
1 = The Brown-out Reset circuit is active
0 = The Brown-out Reset circuit is inactive

Note 1: BOREN<1:0> bits are located in Configuration Words.

 © 2011 Microchip Technology Inc.

6.3 Low-Power Brown-out Reset (LPBOR)

The Low-Power Brown-Out Reset (LPBOR) is an essential part of the Reset subsystem. Refer to Figure 6-1 to see how the BOR interacts with other modules.

The LPBOR is used to monitor the external VDD pin. When too low of a voltage is detected, the device is held in Reset. When this occurs, a register bit ($\overline{BOR}$) is changed to indicate that a BOR Reset has occurred. The same bit is set for both the BOR and the LPBOR. Refer to Register 6-2.

6.3.1 ENABLING LPBOR

The LPBOR is controlled by the $\overline{LPBOR}$ bit of Configuration Words. When the device is erased, the LPBOR module defaults to disabled.

6.3.1.1 LPBOR Module Output

The output of the LPBOR module is a signal indicating whether or not a Reset is to be asserted. This signal is OR'd together with the Reset signal of the BOR module to provide the generic $\overline{BOR}$ signal which goes to the PCON register and to the power control block.

6.4 $\overline{MCLR}$

The $\overline{MCLR}$ is an optional external input that can reset the device. The $\overline{MCLR}$ function is controlled by the MCLRE bit of Configuration Words and the LVP bit of Configuration Words (Table 6-2).

TABLE 6-2: MCLR CONFIGURATION

MCLRE	LVP	$\overline{MCLR}$
0	0	Disabled
1	0	Enabled
x	1	Enabled

6.4.1 $\overline{MCLR}$ ENABLED

When $\overline{MCLR}$ is enabled and the pin is held low, the device is held in Reset. The $\overline{MCLR}$ pin is connected to VDD through an internal weak pull-up.

The device has a noise filter in the $\overline{MCLR}$ Reset path. The filter will detect and ignore small pulses.

Note: A Reset does not drive the $\overline{MCLR}$ pin low.

6.4.2 $\overline{MCLR}$ DISABLED

When $\overline{MCLR}$ is disabled, the pin functions as a general purpose input and the internal weak pull-up is under software control. See **Section 11.2 "PORTA Registers"** for more information.

6.5 Watchdog Timer (WDT) Reset

The Watchdog Timer generates a Reset if the firmware does not issue a CLRWDT instruction within the time-out period. The $\overline{TO}$ and $\overline{PD}$ bits in the STATUS register are changed to indicate the WDT Reset. See **Section 9.0 "Watchdog Timer"** for more information.

6.6 RESET Instruction

A RESET instruction will cause a device Reset. The $\overline{RI}$ bit in the PCON register will be set to '0'. See Table 6-4 for default conditions after a RESET instruction has occurred.

6.7 Stack Overflow/Underflow Reset

The device can reset when the Stack Overflows or Underflows. The STKOVF or STKUNF bits of the PCON register indicate the Reset condition. These Resets are enabled by setting the STVREN bit in Configuration Words. See **Section 3.4.2 "Overflow/Underflow Reset"** for more information.

6.8 Programming Mode Exit

Upon exit of Programming mode, the device will behave as if a POR had just occurred.

6.9 Power-Up Timer

The Power-up Timer optionally delays device execution after a BOR or POR event. This timer is typically used to allow VDD to stabilize before allowing the device to start running.

The Power-up Timer is controlled by the $\overline{PWRTE}$ bit of Configuration Words.

6.10 Start-up Sequence

Upon the release of a POR or BOR, the following must occur before the device will begin executing:

1. Power-up Timer runs to completion (if enabled).
2. $\overline{MCLR}$ must be released (if enabled).

The total time-out will vary based on oscillator configuration and Power-up Timer configuration. See **Section 5.0 "Oscillator Module"** for more information.

The Power-up Timer runs independently of $\overline{MCLR}$ Reset. If $\overline{MCLR}$ is kept low long enough, the Power-up Timer will expire. Upon bringing $\overline{MCLR}$ high, the device will begin execution immediately (see Figure 6-3). This is useful for testing purposes or to synchronize more than one device operating in parallel.

FIGURE 6-3: RESET START-UP SEQUENCE

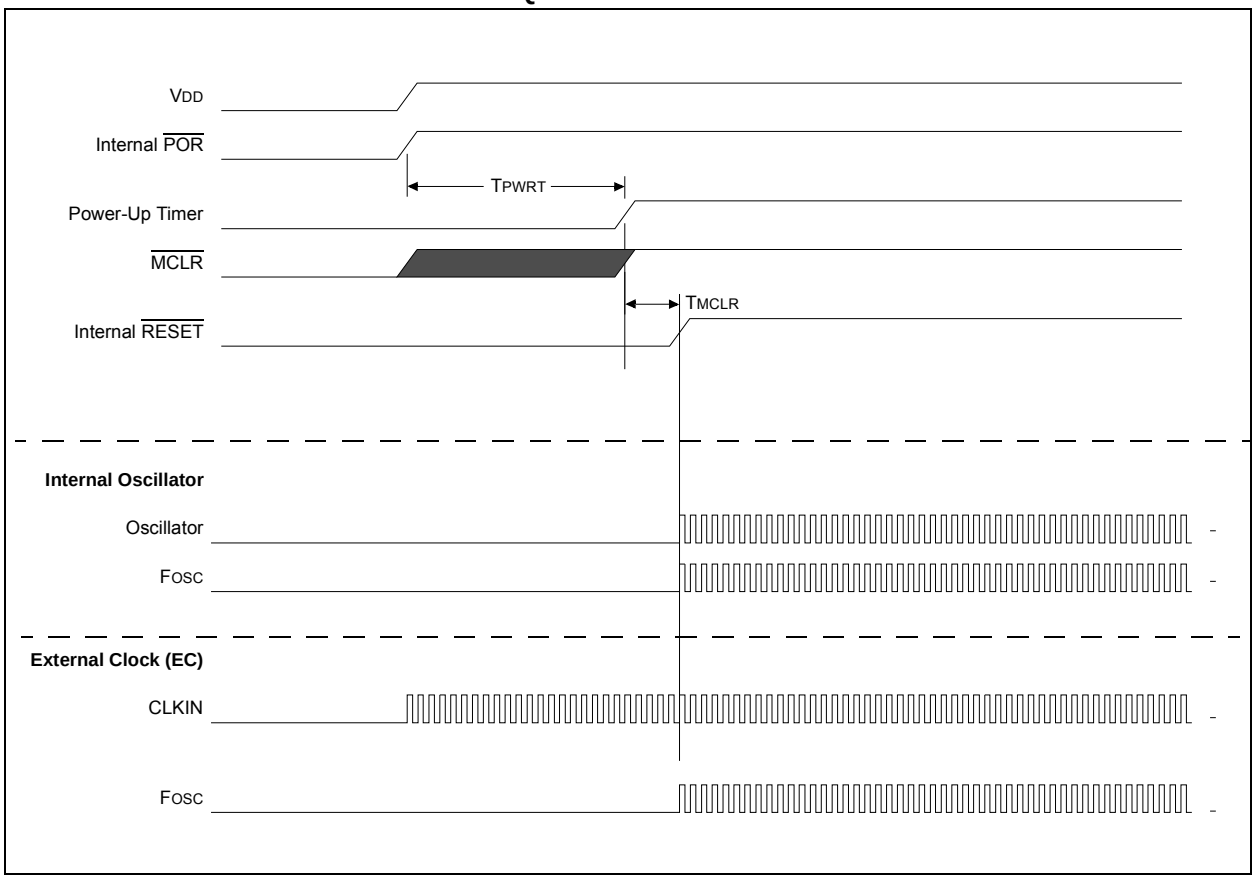

 © 2011 Microchip Technology Inc.

6.11 Determining the Cause of a Reset

Upon any Reset, multiple bits in the STATUS and PCON register are updated to indicate the cause of the Reset. Table 6-3 and Table 6-4 show the Reset conditions of these registers.

TABLE 6-3: RESET STATUS BITS AND THEIR SIGNIFICANCE

STKOVF	STKUNF	$\overline{\text{RWDT}}$	$\overline{\text{RMCLR}}$	$\overline{\text{RI}}$	$\overline{\text{POR}}$	$\overline{\text{BOR}}$	$\overline{\text{TO}}$	$\overline{\text{PD}}$	Condition
0	0	1	1	1	0	x	1	1	Power-on Reset
0	0	1	1	1	0	x	0	x	Illegal, $\overline{\text{TO}}$ is set on $\overline{\text{POR}}$
0	0	1	1	1	0	x	x	0	Illegal, $\overline{\text{PD}}$ is set on $\overline{\text{POR}}$
0	0	u	1	1	u	0	1	1	Brown-out Reset
u	u	0	u	u	u	u	0	u	WDT Reset
u	u	u	u	u	u	u	0	0	WDT Wake-up from Sleep
u	u	u	u	u	u	u	1	0	Interrupt Wake-up from Sleep
u	u	u	0	u	u	u	u	u	$\overline{\text{MCLR}}$ Reset during normal operation
u	u	u	0	u	u	u	1	0	$\overline{\text{MCLR}}$ Reset during Sleep
u	u	u	u	0	u	u	u	u	RESET Instruction Executed
1	u	u	u	u	u	u	u	u	Stack Overflow Reset (STVREN = 1)
u	1	u	u	u	u	u	u	u	Stack Underflow Reset (STVREN = 1)

TABLE 6-4: RESET CONDITION FOR SPECIAL REGISTERS(2)

Condition	Program Counter	STATUS Register	PCON Register
Power-on Reset	0000h	---1 1000	00-- 110x
$\overline{\text{MCLR}}$ Reset during normal operation	0000h	---u uuuu	uu-- 0uuu
$\overline{\text{MCLR}}$ Reset during Sleep	0000h	---1 0uuu	uu-- 0uuu
WDT Reset	0000h	---0 uuuu	uu-- uuuu
WDT Wake-up from Sleep	PC + 1	---0 0uuu	uu-- uuuu
Brown-out Reset	0000h	---1 1uuu	00-- 11u0
Interrupt Wake-up from Sleep	PC + 1(1)	---1 0uuu	uu-- uuuu
RESET Instruction Executed	0000h	---u uuuu	uu-- u0uu
Stack Overflow Reset (STVREN = 1)	0000h	---u uuuu	1u-- uuuu
Stack Underflow Reset (STVREN = 1)	0000h	---u uuuu	u1-- uuuu

Legend: u = unchanged, x = unknown, - = unimplemented bit, reads as '0'.

Note 1: When the wake-up is due to an interrupt and Global Interrupt Enable bit (GIE) is set, the return address is pushed on the stack and PC is loaded with the interrupt vector (0004h) after execution of PC + 1.

2: If a Status bit is not implemented, that bit will be read as '0'.

6.12 Power Control (PCON) Register

The Power Control (PCON) register contains flag bits to differentiate between a:

- Power-on Reset ($\overline{POR}$)
- Brown-out Reset ($\overline{BOR}$)
- Reset Instruction Reset ($\overline{RI}$)
- $\overline{MCLR}$ Reset ($\overline{RMCLR}$)
- Watchdog Timer Reset ($\overline{RWDT}$)
- Stack Underflow Reset (STKUNF)
- Stack Overflow Reset (STKOVF)

The PCON register bits are shown in Register 6-2.

REGISTER 6-2: PCON: POWER CONTROL REGISTER

R/W/HS-0/q	R/W/HS-0/q	U-0	R/W/HC-1/q	R/W/HC-1/q	R/W/HC-1/q	R/W/HC-q/u	R/W/HC-q/u
STKOVF	STKUNF	—	$\overline{RWDT}$	$\overline{RMCLR}$	$\overline{RI}$	$\overline{POR}$	$\overline{BOR}$
bit 7							bit 0

Legend:		
HC = Bit is cleared by hardware		HS = Bit is set by hardware
R = Readable bit	W = Writable bit	U = Unimplemented bit, read as ‘0’
u = Bit is unchanged	x = Bit is unknown	-n/n = Value at POR and BOR/Value at all other Resets
‘1’ = Bit is set	‘0’ = Bit is cleared	q = Value depends on condition

bit 7 **STKOVF:** Stack Overflow Flag bit
1 = A Stack Overflow occurred
0 = A Stack Overflow has not occurred or cleared by firmware

bit 6 **STKUNF:** Stack Underflow Flag bit
1 = A Stack Underflow occurred
0 = A Stack Underflow has not occurred or cleared by firmware

bit 5 **Unimplemented:** Read as ‘0’

bit 4 **$\overline{RWDT}$:** Watchdog Timer Reset Flag bit
1 = A Watchdog Timer Reset has not occurred or set by firmware
0 = A Watchdog Timer Reset has occurred (cleared by hardware)

bit 3 **$\overline{RMCLR}$:** $\overline{MCLR}$ Reset Flag bit
1 = A $\overline{MCLR}$ Reset has not occurred or set by firmware
0 = A $\overline{MCLR}$ Reset has occurred (cleared by hardware)

bit 2 **$\overline{RI}$:** RESET Instruction Flag bit
1 = A RESET instruction has not been executed or set by firmware
0 = A RESET instruction has been executed (cleared by hardware)

bit 1 **$\overline{POR}$:** Power-on Reset Status bit
1 = No Power-on Reset occurred
0 = A Power-on Reset occurred (must be set in software after a Power-on Reset occurs)

bit 0 **$\overline{BOR}$:** Brown-out Reset Status bit
1 = No Brown-out Reset occurred
0 = A Brown-out Reset occurred (must be set in software after a Power-on Reset or Brown-out Reset occurs)

 © 2011 Microchip Technology Inc.

TABLE 6-5: SUMMARY OF REGISTERS ASSOCIATED WITH RESETS

Name	Bit 7	Bit 6	Bit 5	Bit 4	Bit 3	Bit 2	Bit 1	Bit 0	Register on Page
BORCON	SBOREN	BORFS	—	—	—	—	—	BORRDY	55
PCON	STKOVF	STKUNF	—	$\overline{\text{RWDT}}$	$\overline{\text{RMCLR}}$	$\overline{\text{RI}}$	$\overline{\text{POR}}$	$\overline{\text{BOR}}$	59
STATUS	—	—	—	$\overline{\text{TO}}$	$\overline{\text{PD}}$	Z	DC	C	18
WDTCON	—	—	WDTPS<4:0>					SWDTEN	81

Legend: — = unimplemented bit, reads as '0'. Shaded cells are not used by Resets.

Note 1: Other (non Power-up) Resets include $\overline{\text{MCLR}}$ Reset and Watchdog Timer Reset during normal operation.

TABLE 6-6: SUMMARY OF CONFIGURATION WORD WITH RESETS

Name	Bits	Bit -/7	Bit -/6	Bit 13/5	Bit 12/4	Bit 11/3	Bit 10/2	Bit 9/1	Bit 8/0	Register on Page
CONFIG1	13:8	—	—	—	—	$\overline{\text{CLKOUTEN}}$	BOREN<1:0>		—	40
	7:0	$\overline{\text{CP}}$	MCLRE	$\overline{\text{PWRTE}}$	WDTE<1:0>		—	FOSC<1:0>		
CONFIG2	13:8	—	—	LVP	—	$\overline{\text{LPBOR}}$	BORV	STVREN	—	41
	7:0	—	—	—	—	—	—	WRT<1:0>		

Legend: — = unimplemented location, read as '0'. Shaded cells are not used by Flash program memory.

7.0 INTERRUPTS

The interrupt feature allows certain events to preempt normal program flow. Firmware is used to determine the source of the interrupt and act accordingly. Some interrupts can be configured to wake the MCU from Sleep mode.

This chapter contains the following information for Interrupts:

- Operation
- Interrupt Latency
- Interrupts During Sleep
- INT Pin
- Automatic Context Saving

Many peripherals produce Interrupts. Refer to the corresponding chapters for details.

A block diagram of the interrupt logic is shown in Figure 7-1.

FIGURE 7-1: INTERRUPT LOGIC

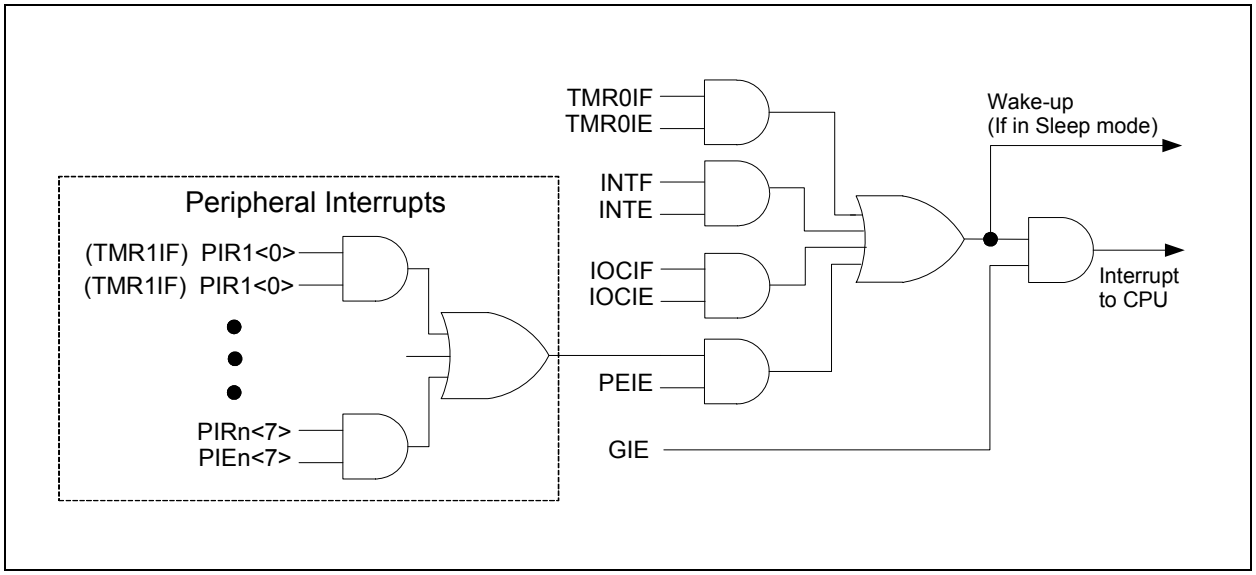

 © 2011 Microchip Technology Inc.

7.1 Operation

Interrupts are disabled upon any device Reset. They are enabled by setting the following bits:

- GIE bit of the INTCON register
- Interrupt Enable bit(s) for the specific interrupt event(s)
- PEIE bit of the INTCON register (if the Interrupt Enable bit of the interrupt event is contained in the PIE1, PIE2 and PIE3 registers)

The INTCON, PIR1, PIR2 and PIR3 registers record individual interrupts via interrupt flag bits. Interrupt flag bits will be set, regardless of the status of the GIE, PEIE and individual interrupt enable bits.

The following events happen when an interrupt event occurs while the GIE bit is set:

- Current prefetched instruction is flushed
- GIE bit is cleared
- Current Program Counter (PC) is pushed onto the stack
- Critical registers are automatically saved to the shadow registers (See **"Section 7.5 "Automatic Context Saving"."**)
- PC is loaded with the interrupt vector 0004h

The firmware within the Interrupt Service Routine (ISR) should determine the source of the interrupt by polling the interrupt flag bits. The interrupt flag bits must be cleared before exiting the ISR to avoid repeated interrupts. Because the GIE bit is cleared, any interrupt that occurs while executing the ISR will be recorded through its interrupt flag, but will not cause the processor to redirect to the interrupt vector.

The `RETFIE` instruction exits the ISR by popping the previous address from the stack, restoring the saved context from the shadow registers and setting the GIE bit.

For additional information on a specific interrupt's operation, refer to its peripheral chapter.

Note 1:	Individual interrupt flag bits are set, regardless of the state of any other enable bits.
2:	All interrupts will be ignored while the GIE bit is cleared. Any interrupt occurring while the GIE bit is clear will be serviced when the GIE bit is set again.

7.2 Interrupt Latency

Interrupt latency is defined as the time from when the interrupt event occurs to the time code execution at the interrupt vector begins. The latency for synchronous interrupts is 3 or 4 instruction cycles. For asynchronous interrupts, the latency is 3 to 5 instruction cycles, depending on when the interrupt occurs. See Figure 7-2 and Figure 7.3 for more details.

FIGURE 7-2: INTERRUPT LATENCY

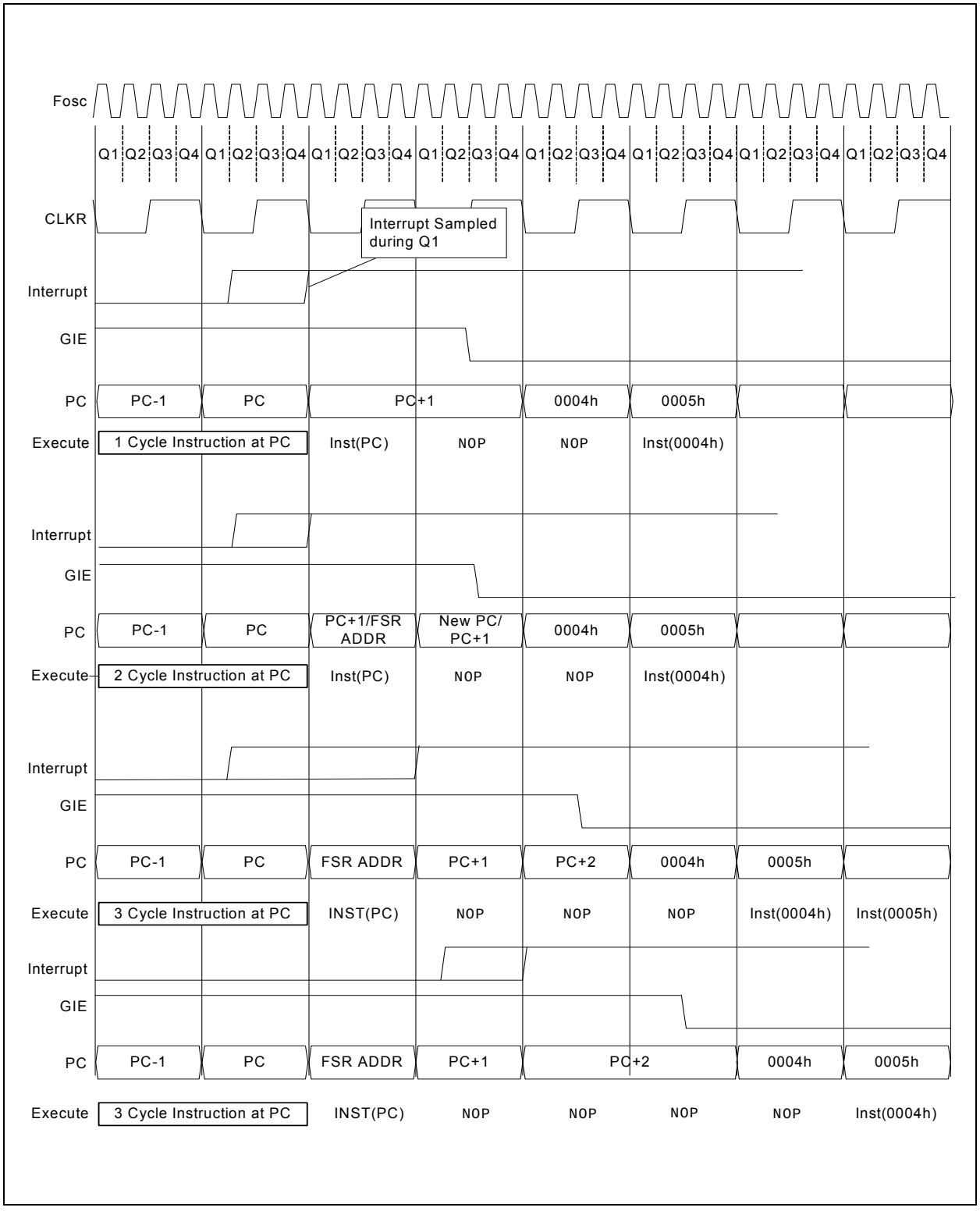

 © 2011 Microchip Technology Inc.

FIGURE 7-3: INT PIN INTERRUPT TIMING

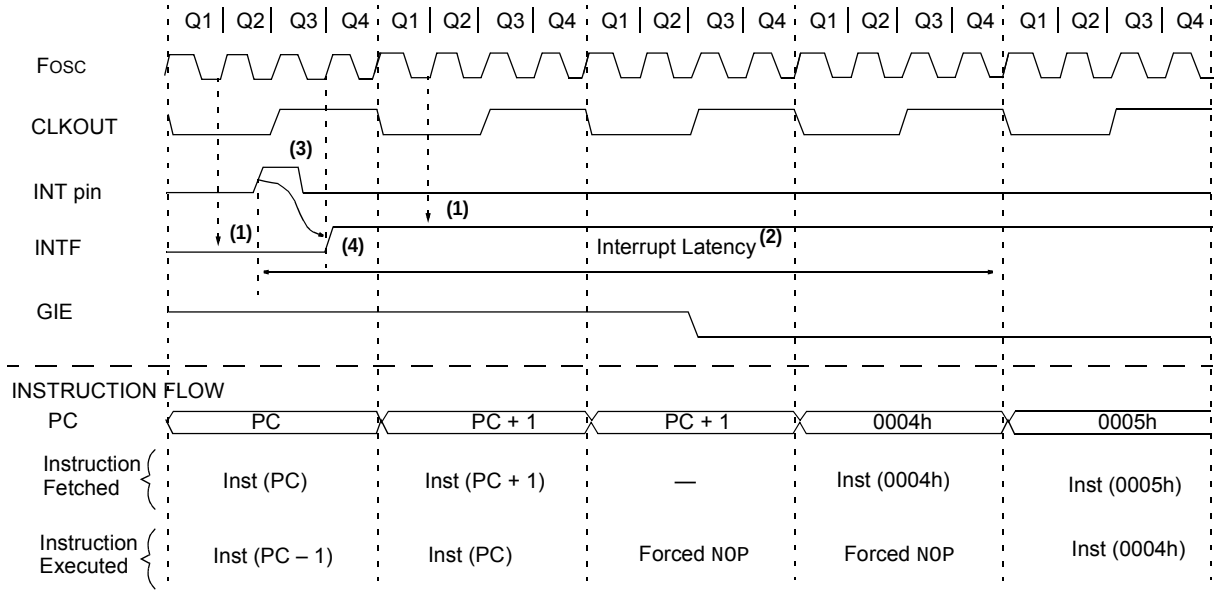

Note 1: INTF flag is sampled here (every Q1).

2: Asynchronous interrupt latency = 3-5 TCY. Synchronous latency = 3-4 TCY, where TCY = instruction cycle time. Latency is the same whether Inst (PC) is a single cycle or a 2-cycle instruction.

3: For minimum width of INT pulse, refer to AC specifications in **Section 25.0 "Electrical Specifications"**".

4: INTF is enabled to be set any time during the Q4-Q1 cycles.

7.3 Interrupts During Sleep

Some interrupts can be used to wake from Sleep. To wake from Sleep, the peripheral must be able to operate without the system clock. The interrupt source must have the appropriate Interrupt Enable bit(s) set prior to entering Sleep.

On waking from Sleep, if the GIE bit is also set, the processor will branch to the interrupt vector. Otherwise, the processor will continue executing instructions after the SLEEP instruction. The instruction directly after the SLEEP instruction will always be executed before branching to the ISR. Refer to **Section 8.0 "Power-Down Mode (Sleep)"** for more details.

7.4 INT Pin

The INT pin can be used to generate an asynchronous edge-triggered interrupt. This interrupt is enabled by setting the INTE bit of the INTCON register. The INTEDG bit of the OPTION_REG register determines on which edge the interrupt will occur. When the INTEDG bit is set, the rising edge will cause the interrupt. When the INTEDG bit is clear, the falling edge will cause the interrupt. The INTF bit of the INTCON register will be set when a valid edge appears on the INT pin. If the GIE and INTE bits are also set, the processor will redirect program execution to the interrupt vector.

7.5 Automatic Context Saving

Upon entering an interrupt, the return PC address is saved on the stack. Additionally, the following registers are automatically saved in the Shadow registers:

- W register
- STATUS register (except for $\overline{TO}$ and $\overline{PD}$)
- BSR register
- FSR registers
- PCLATH register

Upon exiting the Interrupt Service Routine, these registers are automatically restored. Any modifications to these registers during the ISR will be lost. If modifications to any of these registers are desired, the corresponding Shadow register should be modified and the value will be restored when exiting the ISR. The Shadow registers are available in Bank 31 and are readable and writable. Depending on the user's application, other registers may also need to be saved.

 © 2011 Microchip Technology Inc.

7.6 Interrupt Control Registers

7.6.1 INTCON REGISTER

The INTCON register is a readable and writable register, that contains the various enable and flag bits for TMR0 register overflow, interrupt-on-change and external INT pin interrupts.

Note: Interrupt flag bits are set when an interrupt condition occurs, regardless of the state of its corresponding enable bit or the Global Interrupt Enable bit, GIE, of the INTCON register. User software should ensure the appropriate interrupt flag bits are clear prior to enabling an interrupt.

REGISTER 7-1: INTCON: INTERRUPT CONTROL REGISTER

R/W-0/0	R/W-0/0	R/W-0/0	R/W-0/0	R/W-0/0	R/W-0/0	R/W-0/0	R-0/0
GIE	PEIE	TMR0IE	INTE	IOCIE	TMR0IF	INTF	IOCIF(1)
bit 7							bit 0

Legend:		
R = Readable bit	W = Writable bit	U = Unimplemented bit, read as '0'
u = Bit is unchanged	x = Bit is unknown	-n/n = Value at POR and BOR/Value at all other Resets
'1' = Bit is set	'0' = Bit is cleared	

bit 7 **GIE:** Global Interrupt Enable bit
1 = Enables all active interrupts
0 = Disables all interrupts

bit 6 **PEIE:** Peripheral Interrupt Enable bit
1 = Enables all active peripheral interrupts
0 = Disables all peripheral interrupts

bit 5 **TMR0IE:** Timer0 Overflow Interrupt Enable bit
1 = Enables the Timer0 interrupt
0 = Disables the Timer0 interrupt

bit 4 **INTE:** INT External Interrupt Enable bit
1 = Enables the INT external interrupt
0 = Disables the INT external interrupt

bit 3 **IOCIE:** Interrupt-on-Change Enable bit
1 = Enables the interrupt-on-change
0 = Disables the interrupt-on-change

bit 2 **TMR0IF:** Timer0 Overflow Interrupt Flag bit
1 = TMR0 register has overflowed
0 = TMR0 register did not overflow

bit 1 **INTF:** INT External Interrupt Flag bit
1 = The INT external interrupt occurred
0 = The INT external interrupt did not occur

bit 0 **IOCIF:** Interrupt-on-Change Interrupt Flag bit(1)
1 = When at least one of the interrupt-on-change pins changed state
0 = None of the interrupt-on-change pins have changed state

Note 1: The IOCIF Flag bit is read-only and cleared when all the interrupt-on-change flags in the IOCBF register have been cleared by software.

7.6.2 PIE1 REGISTER

The PIE1 register contains the interrupt enable bits, as shown in Register 7-2.

Note: Bit PEIE of the INTCON register must be set to enable any peripheral interrupt.

REGISTER 7-2: PIE1: PERIPHERAL INTERRUPT ENABLE REGISTER 1

R/W-0/0	R/W-0/0	U-0	U-0	U-0	U-0	R/W-0/0	R/W-0/0
TMR1GIE	ADIE	—	—	—	—	TMR2IE	TMR1IE
bit 7							bit 0

Legend:		
R = Readable bit	W = Writable bit	U = Unimplemented bit, read as '0'
u = Bit is unchanged	x = Bit is unknown	-n/n = Value at POR and BOR/Value at all other Resets
'1' = Bit is set	'0' = Bit is cleared	

bit 7 **TMR1GIE:** Timer1 Gate Interrupt Enable bit
1 = Enables the Timer1 Gate Acquisition interrupt
0 = Disables the Timer1 Gate Acquisition interrupt

bit 6 **ADIE:** A/D Converter (ADC) Interrupt Enable bit
1 = Enables the ADC interrupt
0 = Disables the ADC interrupt

bit 5-2 **Unimplemented:** Read as '0'

bit 1 **TMR2IE:** TMR2 to PR2 Match Interrupt Enable bit
1 = Enables the Timer2 to PR2 match interrupt
0 = Disables the Timer2 to PR2 match interrupt

bit 0 **TMR1IE:** Timer1 Overflow Interrupt Enable bit
1 = Enables the Timer1 overflow interrupt
0 = Disables the Timer1 overflow interrupt

 © 2011 Microchip Technology Inc.

7.6.3 PIE2 REGISTER

The PIE2 register contains the interrupt enable bits, as shown in Register 7-3.

Note: Bit PEIE of the INTCON register must be set to enable any peripheral interrupt.

REGISTER 7-3: PIE2: PERIPHERAL INTERRUPT ENABLE REGISTER 2

U-0	U-0	U-0	U-0	U-0	R/W-0/0	U-0	U-0
—	—	—	—	—	NCO1IE	—	—
bit 7							bit 0

Legend:		
R = Readable bit	W = Writable bit	U = Unimplemented bit, read as ‘0’
u = Bit is unchanged	x = Bit is unknown	-n/n = Value at POR and BOR/Value at all other Resets
‘1’ = Bit is set	‘0’ = Bit is cleared	

bit 7-3 **Unimplemented:** Read as ‘0’

bit 2 **NCO1IE:** Numerically Controlled Oscillator Interrupt Enable bit
1 = Enables the NCO interrupt
0 = Disables the NCO interrupt

bit 1-0 **Unimplemented:** Read as ‘0’

7.6.4 PIE3 REGISTER

The PIE3 register contains the interrupt enable bits, as shown in Register 7-4.

Note: Bit PEIE of the INTCON register must be set to enable any peripheral interrupt.

REGISTER 7-4: PIE3: PERIPHERAL INTERRUPT ENABLE REGISTER 3

U-0	U-0	U-0	U-0	U-0	U-0	R/W-0/0	R/W-0/0
—	—	—	—	—	—	CLC2IE	CLC1IE
bit 7							bit 0

Legend:		
R = Readable bit	W = Writable bit	U = Unimplemented bit, read as ‘0’
u = Bit is unchanged	x = Bit is unknown	-n/n = Value at POR and BOR/Value at all other Resets
‘1’ = Bit is set	‘0’ = Bit is cleared	

bit 7-2 **Unimplemented:** Read as ‘0’

bit 1 **CLC2IE:** Configurable Logic Block 2 Interrupt Enable bit
1 = Enables the CLC 2 interrupt
0 = Disables the CLC 2 interrupt

bit 0 **CLC1IE:** Configurable Logic Block 1 Interrupt Enable bit
1 = Enables the CLC 1 interrupt
0 = Disables the CLC 1 interrupt

 © 2011 Microchip Technology Inc.

7.6.5 PIR1 REGISTER

The PIR1 register contains the interrupt flag bits, as shown in Register 7-5.

Note: Interrupt flag bits are set when an interrupt condition occurs, regardless of the state of its corresponding enable bit or the Global Interrupt Enable bit, GIE, of the INTCON register. User software should ensure the appropriate interrupt flag bits are clear prior to enabling an interrupt.

REGISTER 7-5: PIR1: PERIPHERAL INTERRUPT REQUEST REGISTER 1

R/W-0/0	R/W-0/0	U-0	U-0	U-0	U-0	R/W-0/0	R/W-0/0
TMR1GIF	ADIF	—	—	—	—	TMR2IF	TMR1IF
bit 7							bit 0

Legend:		
R = Readable bit	W = Writable bit	U = Unimplemented bit, read as ‘0’
u = Bit is unchanged	x = Bit is unknown	-n/n = Value at POR and BOR/Value at all other Resets
‘1’ = Bit is set	‘0’ = Bit is cleared	

bit 7 **TMR1GIF:** Timer1 Gate Interrupt Flag bit
1 = Interrupt is pending
0 = Interrupt is not pending

bit 6 **ADIF:** A/D Converter Interrupt Flag bit
1 = Interrupt is pending
0 = Interrupt is not pending

bit 5-2 **Unimplemented:** Read as ‘0’

bit 1 **TMR2IF:** Timer2 to PR2 Interrupt Flag bit
1 = Interrupt is pending
0 = Interrupt is not pending

bit 0 **TMR1IF:** Timer1 Overflow Interrupt Flag bit
1 = Interrupt is pending
0 = Interrupt is not pending

7.6.6 PIR2 REGISTER

The PIR2 register contains the interrupt flag bits, as shown in Register 7-6.

Note:	Interrupt flag bits are set when an interrupt condition occurs, regardless of the state of its corresponding enable bit or the Global Interrupt Enable bit, GIE, of the INTCON register. User software should ensure the appropriate interrupt flag bits are clear prior to enabling an interrupt.

REGISTER 7-6: PIR2: PERIPHERAL INTERRUPT REQUEST REGISTER 2

U-0	U-0	U-0	U-0	U-0	R/W-0/0	U-0	U-0
—	—	—	—	—	NCO1IF	—	—
bit 7							bit 0

Legend:		
R = Readable bit	W = Writable bit	U = Unimplemented bit, read as ‘0’
u = Bit is unchanged	x = Bit is unknown	-n/n = Value at POR and BOR/Value at all other Resets
‘1’ = Bit is set	‘0’ = Bit is cleared	

bit 7-3 **Unimplemented:** Read as ‘0’

bit 2 **NCO1IF:** Numerically Controlled Oscillator Flag bit
1 = Interrupt is pending
0 = Interrupt is not pending

bit 1-0 **Unimplemented:** Read as ‘0’

 © 2011 Microchip Technology Inc.

7.6.7 PIR3 REGISTER

The PIR3 register contains the interrupt flag bits, as shown in Register 7-7.

Note:	Interrupt flag bits are set when an interrupt condition occurs, regardless of the state of its corresponding enable bit or the Global Enable bit, GIE, of the INTCON register. User software should ensure the appropriate interrupt flag bits are clear prior to enabling an interrupt.

REGISTER 7-7: PIR3: PERIPHERAL INTERRUPT REQUEST REGISTER 3

U-0	U-0	U-0	U-0	U-0	U-0	R/W-0/0	R/W-0/0
—	—	—	—	—	—	CLC2IF	CLC1IF
bit 7							bit 0

Legend:		
R = Readable bit	W = Writable bit	U = Unimplemented bit, read as ‘0’
u = Bit is unchanged	x = Bit is unknown	-n/n = Value at POR and BOR/Value at all other Resets
‘1’ = Bit is set	‘0’ = Bit is cleared	

bit 7-2 **Unimplemented:** Read as ‘0’

bit 1 **CLC2IF:** Configurable Logic Block 2 Interrupt Flag bit
1 = Interrupt is pending
0 = Interrupt is not pending

bit 0 **CLC1IF:** Configurable Logic Block 1 Interrupt Flag bit
1 = Interrupt is pending
0 = Interrupt is not pending

TABLE 7-1: SUMMARY OF REGISTERS ASSOCIATED WITH INTERRUPTS

Name	Bit 7	Bit 6	Bit 5	Bit 4	Bit 3	Bit 2	Bit 1	Bit 0	Register on Page
INTCON	GIE	PEIE	TMR0IE	INTE	IOCIE	TMR0IF	INTF	IOCIF	66
OPTION_REG	$\overline{\text{WPUEN}}$	INTEDG	TMR0CS	TMR0SE	PSA	PS<2:0>			137
PIE1	TMR1GIE	ADIE	—	—	—	—	TMR2IE	TMR1IE	67
PIE2	—	—	—	—	—	NCO1IE	—	—	68
PIE3	—	—	—	—	—	—	CLC2IE	CLC1IE	69
PIR1	TMR1GIF	ADIF	—	—	—	—	TMR2IF	TMR1IF	70
PIR2	—	—	—	—	—	NCO1IF	—	—	71
PIR3	—	—	—	—	—	—	CLC2IF	CLC1IF	72

Legend: — = unimplemented location, read as '0'. Shaded cells are not used by Interrupts.

© 2011 Microchip Technology Inc.

NOTES:

8.0 POWER-DOWN MODE (SLEEP)

The Power-Down mode is entered by executing a SLEEP instruction.

Upon entering Sleep mode, the following conditions exist:

1. WDT will be cleared but keeps running, if enabled for operation during Sleep.
2. $\overline{PD}$ bit of the STATUS register is cleared.
3. $\overline{TO}$ bit of the STATUS register is set.
4. CPU clock is disabled.
5. 31 kHz LFINTOSC is unaffected and peripherals that operate from it may continue operation in Sleep.
6. ADC is unaffected, if the dedicated FRC clock is selected.
7. I/O ports maintain the status they had before SLEEP was executed (driving high, low or high-impedance).
8. Resets other than WDT are not affected by Sleep mode.

Refer to individual chapters for more details on peripheral operation during Sleep.

To minimize current consumption, the following conditions should be considered:

- I/O pins should not be floating
- External circuitry sinking current from I/O pins
- Internal circuitry sourcing current from I/O pins
- Current draw from pins with internal weak pull-ups
- Modules using 31 kHz LFINTOSC
- CWG, NCO and CLC modules using HFINTOSC

I/O pins that are high-impedance inputs should be pulled to V_{DD} or V_{SS} externally to avoid switching currents caused by floating inputs.

Examples of internal circuitry that might be sourcing current include the FVR module. See **Section 13.0 "Fixed Voltage Reference (FVR)"** for more information on this module.

8.1 Wake-up from Sleep

The device can wake-up from Sleep through one of the following events:

1. External Reset input on $\overline{MCLR}$ pin, if enabled
2. BOR Reset, if enabled
3. POR Reset
4. Watchdog Timer, if enabled
5. Any external interrupt
6. Interrupts by peripherals capable of running during Sleep (see individual peripheral for more information)

The first three events will cause a device Reset. The last three events are considered a continuation of program execution. To determine whether a device Reset or wake-up event occurred, refer to **Section 6.11 "Determining the Cause of a Reset"**.

When the SLEEP instruction is being executed, the next instruction (PC + 1) is prefetched. For the device to wake-up through an interrupt event, the corresponding interrupt enable bit must be enabled. Wake-up will occur regardless of the state of the GIE bit. If the GIE bit is disabled, the device continues execution at the instruction after the SLEEP instruction. If the GIE bit is enabled, the device executes the instruction after the SLEEP instruction, the device will then call the Interrupt Service Routine. In cases where the execution of the instruction following SLEEP is not desirable, the user should have a NOP after the SLEEP instruction.

The WDT is cleared when the device wakes up from Sleep, regardless of the source of wake-up.

8.1.1 WAKE-UP USING INTERRUPTS

When global interrupts are disabled (GIE cleared) and any interrupt source has both its interrupt enable bit and interrupt flag bit set, one of the following will occur:

- If the interrupt occurs **before** the execution of a SLEEP instruction
  - SLEEP instruction will execute as a NOP.
  - WDT and WDT prescaler will not be cleared
  - $\overline{TO}$ bit of the STATUS register will not be set
  - $\overline{PD}$ bit of the STATUS register will not be cleared.
- If the interrupt occurs **during or after** the execution of a SLEEP instruction
  - SLEEP instruction will be completely executed
  - Device will immediately wake-up from Sleep
  - WDT and WDT prescaler will be cleared
  - $\overline{TO}$ bit of the STATUS register will be set
  - $\overline{PD}$ bit of the STATUS register will be cleared

 © 2011 Microchip Technology Inc.

Even if the flag bits were checked before executing a SLEEP instruction, it may be possible for flag bits to become set before the SLEEP instruction completes. To determine whether a SLEEP instruction executed, test the $\overline{PD}$ bit. If the $\overline{PD}$ bit is set, the SLEEP instruction was executed as a NOP.

FIGURE 8-1: WAKE-UP FROM SLEEP THROUGH INTERRUPT

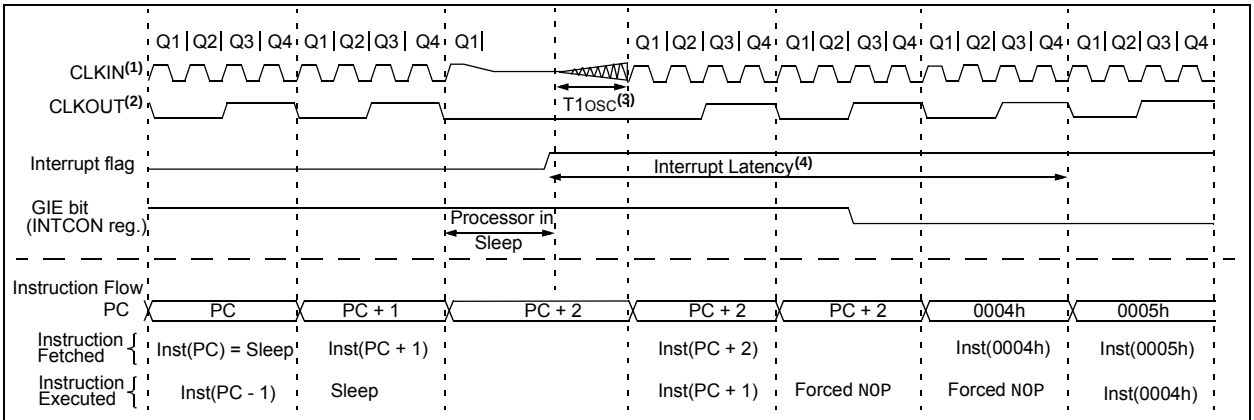

Note 1: External clock. High, Medium, Low mode assumed.
2: CLKOUT is shown here for timing reference.
3: T1OSC; See **Section 25.0 "Electrical Specifications"**.
4: GIE = 1 assumed. In this case after wake-up, the processor calls the ISR at 0004h. If GIE = 0, execution will continue in-line.

8.2 Low-Power Sleep Mode

The PIC16(L)F1507 device contains an internal Low Dropout (LDO) voltage regulator, which allows the device I/O pins to operate at voltages up to 5.5V while the internal device logic operates at a lower voltage. The LDO and its associated reference circuitry must remain active when the device is in Sleep mode. The PIC16(L)F1507 allows the user to optimize the operating current in Sleep, depending on the application requirements.

A Low-Power Sleep mode can be selected by setting the VREGPM bit of the VREGCON register. With this bit set, the LDO and reference circuitry are placed in a low-power state when the device is in Sleep.

8.2.1 SLEEP CURRENT VS. WAKE-UP TIME

In the default operating mode, the LDO and reference circuitry remain in the normal configuration while in Sleep. The device is able to exit Sleep mode quickly since all circuits remain active. In Low-Power Sleep mode, when waking up from Sleep, an extra delay time is required for these circuits to return to the normal configuration and stabilize.

The Low-Power Sleep mode is beneficial for applications that stay in Sleep mode for long periods of time. The Normal mode is beneficial for applications that need to wake from Sleep quickly and frequently.

8.2.2 PERIPHERAL USAGE IN SLEEP

Some peripherals that can operate in Sleep mode will not operate properly with the Low-Power Sleep mode selected. The LDO will remain in the Normal Power mode when those peripherals are enabled. The Low-Power Sleep mode is intended for use with these peripherals:

- Brown-Out Reset (BOR)
- Watchdog Timer (WDT)
- External interrupt pin/Interrupt-on-change pins
- Timer1 (with external clock source)

The Complementary Waveform Generator (CWG), the Numerically Controlled Oscillator (NCO) and the Configurable Logic Cell (CLC) modules can utilize the HFINTOSC oscillator as either a clock source or as an input source. Under certain conditions, when the HFINTOSC is selected for use with the CWG, NCO or CLC modules, the HFINTOSC will remain active during Sleep. This will have a direct effect on the Sleep mode current.

Please refer to sections **20.5 “Operation During Sleep”**, **21.7 “Operation In Sleep”** and **22.10 “Operation During Sleep”** for more information.

Note:	The PIC16LF1507 does not have a configurable Low-Power Sleep mode. PIC16LF1507 is an unregulated device and is always in the lowest power state when in Sleep, with no wake-up time penalty. This device has a lower maximum V_{DD} and I/O voltage than the PIC16(L)F1507. See **Section 25.0 “Electrical Specifications”** for more information.

 © 2011 Microchip Technology Inc.

REGISTER 8-1: VREGCON: VOLTAGE REGULATOR CONTROL REGISTER(1)

U-0	U-0	U-0	U-0	U-0	U-0	R/W-0/0	R/W-1/1
—	—	—	—	—	—	VREGPM	Reserved
bit 7							bit 0

Legend:		
R = Readable bit	W = Writable bit	U = Unimplemented bit, read as '0'
u = Bit is unchanged	x = Bit is unknown	-n/n = Value at POR and BOR/Value at all other Resets
'1' = Bit is set	'0' = Bit is cleared	

bit 7-2 **Unimplemented:** Read as '0'

bit 1 **VREGPM:** Voltage Regulator Power Mode Selection bit

1 = Low-Power Sleep mode enabled in Sleep
Draws lowest current in Sleep, slower wake-up

0 = Normal Power mode enabled in Sleep
Draws higher current in Sleep, faster wake-up

bit 0 **Reserved:** Read as '1'. Maintain this bit set.

Note 1: PIC16F1507 only.

TABLE 8-1: SUMMARY OF REGISTERS ASSOCIATED WITH POWER-DOWN MODE

Name	Bit 7	Bit 6	Bit 5	Bit 4	Bit 3	Bit 2	Bit 1	Bit 0	Register on Page
INTCON	GIE	PEIE	TMR0IE	INTE	IOCIE	TMR0IF	INTF	IOCIF	66
IOCAF	—	—	IOCAF5	IOCAF4	IOCAF3	IOCAF2	IOCAF1	IOCAF0	113
IOCAN	—	—	IOCAN5	IOCAN4	IOCAN3	IOCAN2	IOCAN1	IOCAN0	113
IOCAP	—	—	IOCAP5	IOCAP4	IOCAP3	IOCAP2	IOCAP1	IOCAP0	113
IOCBF	IOCBF7	IOCBF6	IOCBF5	IOCBF4	—	—	—	—	114
IOCBN	IOCBN7	IOCBN6	IOCBN5	IOCBN4	—	—	—	—	114
IOCBP	IOCBP7	IOCBP6	IOCBP5	IOCBP4	—	—	—	—	114
PIE1	TMR1GIE	ADIE	—	—	—	—	TMR2IE	TMR1IE	67
PIE2	—	—	—	—	—	NCO1IE	—	—	68
PIR1	TMR1GIF	ADIF	—	—	—	—	TMR2IF	TMR1IF	70
PIR2	—	—	—	—	—	NCO1IF	—	—	71
STATUS	—	—	—	$\overline{TO}$	$\overline{PD}$	Z	DC	C	18
WDTCON	—	—	WDTPS<4:0>					SWDTEN	81

Legend: — = unimplemented, read as '0'. Shaded cells are not used in Power-down mode.

9.0 WATCHDOG TIMER

The Watchdog Timer is a system timer that generates a Reset if the firmware does not issue a CLRWDT instruction within the time-out period. The Watchdog Timer is typically used to recover the system from unexpected events.

The WDT has the following features:

- Independent clock source
- Multiple operating modes
  - WDT is always on
  - WDT is off when in Sleep
  - WDT is controlled by software
  - WDT is always off
- Configurable time-out period is from 1 ms to 256 seconds (typical)
- Multiple Reset conditions
- Operation during Sleep

FIGURE 9-1: WATCHDOG TIMER BLOCK DIAGRAM

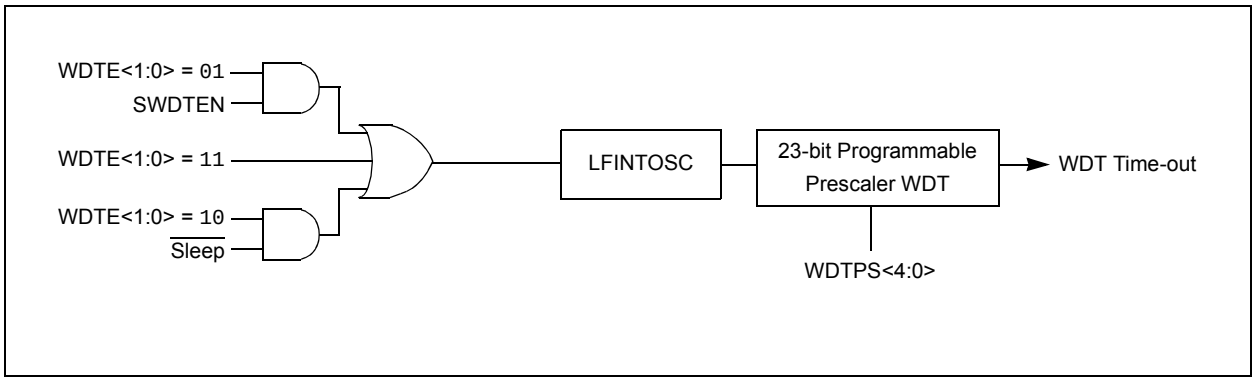

 © 2011 Microchip Technology Inc.

9.1 Independent Clock Source

The WDT derives its time base from the 31 kHz LFINTOSC internal oscillator. Time intervals in this chapter are based on a nominal interval of 1 ms. See **Section 25.0 "Electrical Specifications"** for the LFINTOSC tolerances.

9.2 WDT Operating Modes

The Watchdog Timer module has four operating modes controlled by the WDTE<1:0> bits in Configuration Words. See Table 9-1.

9.2.1 WDT IS ALWAYS ON

When the WDTE bits of Configuration Words are set to '11', the WDT is always on.

WDT protection is active during Sleep.

9.2.2 WDT IS OFF IN SLEEP

When the WDTE bits of Configuration Words are set to '10', the WDT is on, except in Sleep.

WDT protection is not active during Sleep.

9.2.3 WDT CONTROLLED BY SOFTWARE

When the WDTE bits of Configuration Words are set to '01', the WDT is controlled by the SWDTEN bit of the WDTCON register.

WDT protection is unchanged by Sleep. See Table 9-1 for more details.

TABLE 9-1: WDT OPERATING MODES

WDTE<1:0>	SWDTEN	Device Mode	WDT Mode
11	X	X	Active
10	X	Awake	Active
		Sleep	Disabled
01	1	X	Active
	0		Disabled
00	X	X	Disabled

9.3 Time-Out Period

The WDTPS bits of the WDTCON register set the time-out period from 1 ms to 256 seconds (nominal). After a Reset, the default time-out period is 2 seconds.

9.4 Clearing the WDT

The WDT is cleared when any of the following conditions occur:

- Any Reset
- CLRWDT instruction is executed
- Device enters Sleep
- Device wakes up from Sleep
- Oscillator fail
- WDT is disabled

See Table 9-2 for more information.

9.5 Operation During Sleep

When the device enters Sleep, the WDT is cleared. If the WDT is enabled during Sleep, the WDT resumes counting.

When the device exits Sleep, the WDT is cleared again. The WDT remains clear until the OST, if enabled, completes. See **Section 5.0 "Oscillator Module"** for more information on the OST.

When a WDT time-out occurs while the device is in Sleep, no Reset is generated. Instead, the device wakes up and resumes operation. The $\overline{TO}$ and $\overline{PD}$ bits in the STATUS register are changed to indicate the event. The $\overline{RWDT}$ bit in the PCON register can also be used. See **Section 3.0 "Memory Organization"** for more information.

TABLE 9-2: WDT CLEARING CONDITIONS

Conditions	WDT
WDTE<1:0> = 00	Cleared
WDTE<1:0> = 01 and SWDTEN = 0	
WDTE<1:0> = 10 and enter Sleep	
CLRWDT Command	
Oscillator Fail Detected	
Exit Sleep + System Clock = INTOSC, EXTCLK	
Change INTOSC divider (IRCF bits)	Unaffected

9.6 Watchdog Control Register

REGISTER 9-1: WDTCON: WATCHDOG TIMER CONTROL REGISTER

U-0	U-0	R/W-0/0	R/W-1/1	R/W-0/0	R/W-1/1	R/W-1/1	R/W-0/0
—	—	WDTPS<4:0>					SWDTEN
bit 7							bit 0

Legend:		
R = Readable bit	W = Writable bit	U = Unimplemented bit, read as '0'
u = Bit is unchanged	x = Bit is unknown	-n/n = Value at POR and BOR/Value at all other Resets
'1' = Bit is set	'0' = Bit is cleared	

bit 7-6 **Unimplemented:** Read as '0'

bit 5-1 **WDTPS<4:0>:** Watchdog Timer Period Select bits(1)

Bit Value = Prescale Rate

00000 = 1:32 (Interval 1 ms nominal)
00001 = 1:64 (Interval 2 ms nominal)
00010 = 1:128 (Interval 4 ms nominal)
00011 = 1:256 (Interval 8 ms nominal)
00100 = 1:512 (Interval 16 ms nominal)
00101 = 1:1024 (Interval 32 ms nominal)
00110 = 1:2048 (Interval 64 ms nominal)
00111 = 1:4096 (Interval 128 ms nominal)
01000 = 1:8192 (Interval 256 ms nominal)
01001 = 1:16384 (Interval 512 ms nominal)
01010 = 1:32768 (Interval 1s nominal)
01011 = 1:65536 (Interval 2s nominal) (Reset value)
01100 = 1:131072 (2^{17}) (Interval 4s nominal)
01101 = 1:262144 (2^{18}) (Interval 8s nominal)
01110 = 1:524288 (2^{19}) (Interval 16s nominal)
01111 = 1:1048576 (2^{20}) (Interval 32s nominal)
10000 = 1:2097152 (2^{21}) (Interval 64s nominal)
10001 = 1:4194304 (2^{22}) (Interval 128s nominal)
10010 = 1:8388608 (2^{23}) (Interval 256s nominal)

10011 = Reserved. Results in minimum interval (1:32)
•
•
•
11111 = Reserved. Results in minimum interval (1:32)

bit 0 **SWDTEN:** Software Enable/Disable for Watchdog Timer bit

If WDTE<1:0> = 00:
This bit is ignored.
If WDTE<1:0> = 01:
1 = WDT is turned on
0 = WDT is turned off
If WDTE<1:0> = 1x:
This bit is ignored.

Note 1: Times are approximate. WDT time is based on 31 kHz LFINTOSC.

 © 2011 Microchip Technology Inc.

TABLE 9-3: SUMMARY OF REGISTERS ASSOCIATED WITH WATCHDOG TIMER

Name	Bit 7	Bit 6	Bit 5	Bit 4	Bit 3	Bit 2	Bit 1	Bit 0	Register on Page
OSCCON	—	IRCF<3:0>				—	SCS<1:0>		51
PCON	STKOVF	STKUNF	—	$\overline{\text{RWDT}}$	$\overline{\text{RMCLR}}$	$\overline{\text{RI}}$	$\overline{\text{POR}}$	$\overline{\text{BOR}}$	59
STATUS	—	—	—	$\overline{\text{TO}}$	$\overline{\text{PD}}$	Z	DC	C	18
WDTCON	—	—	WDTPS<4:0>					SWDTEN	81

Legend: x = unknown, u = unchanged, – = unimplemented locations read as '0'. Shaded cells are not used by Watchdog Timer.

TABLE 9-4: SUMMARY OF CONFIGURATION WORD WITH WATCHDOG TIMER

Name	Bits	Bit -/7	Bit -/6	Bit 13/5	Bit 12/4	Bit 11/3	Bit 10/2	Bit 9/1	Bit 8/0	Register on Page
CONFIG1	13:8	—	—	—	—	$\overline{\text{CLKOUTEN}}$	BOREN<1:0>		—	40
	7:0	$\overline{\text{CP}}$	MCLRE	$\overline{\text{PWRTE}}$	WDTE<1:0>		—	FOSC<1:0>		

Legend: — = unimplemented location, read as '0'. Shaded cells are not used by Watchdog Timer.

10.0 FLASH PROGRAM MEMORY CONTROL

The Flash program memory is readable and writable during normal operation over the VDD range specified in the Electrical Specification. See **Section 25.0 "Electrical Specifications"**. Program memory is indirectly addressed using Special Function Registers (SFRs). The SFRs used to access program memory are:

- PMCON1
- PMCON2
- PMDATL
- PMDATH
- PMADRL
- PMADRH

When accessing the program memory, the PMDATH:PMDATL register pair forms a 2-byte word that holds the 14-bit data for read/write, and the PMDATH:PMDATL register pair forms a 2-byte word that holds the 15-bit address of the program memory location being read.

The write time is controlled by an on-chip timer. The write/erase voltages are generated by an on-chip charge pump.

The Flash program memory can be protected in two ways; by code protection ($\overline{CP}$ bit in Configuration Words) and write protection (WRT<1:0> bits in Configuration Words).

Code protection ($\overline{CP}$ = 0), disables access, reading and writing, to the entire Flash program memory via external device programmers. Code protection does not affect the self-write and erase functionality. Code protection can only be reset by a device programmer performing a Bulk Erase to the device, clearing all Flash program memory, Configuration bits and User IDs.

Write protection prohibits self-write and erase to a portion or all of the Flash program memory as defined by the bits WRT<1:0>. Write protection does not affect a device programmers ability to read, write or erase the device.

10.1 PMADRL and PMADRH Registers

The PMADRH:PMADRL register pair can address up to a maximum of 16K words of program memory. When selecting a program address value, the MSB of the address is written to the PMADRH register and the LSB is written to the PMADRL register.

10.1.1 PMCON1 AND PMCON2 REGISTERS

PMCON1 is the control register for Flash program memory accesses.

Control bits RD and WR initiate read and write, respectively. These bits cannot be cleared, only set, in software. They are cleared by hardware at completion of the read or write operation. The inability to clear the WR bit in software prevents the accidental, premature termination of a write operation.

The WREN bit, when set, will allow a write operation to occur. On power-up, the WREN bit is clear. The WRERR bit is set when a write operation is interrupted by a Reset during normal operation. In these situations, following Reset, the user can check the WRERR bit and execute the appropriate error handling routine.

The PMCON2 register is a write-only register. Attempting to read the PMCON2 register will return all '0's.

To enable writes to the program memory, a specific pattern (the unlock sequence), must be written to the PMCON2 register. The required unlock sequence prevents inadvertent writes to the program memory write latches and Flash program memory.

10.2 Flash Program Memory Overview

It is important to understand the Flash program memory structure for erase and programming operations. Flash program memory is arranged in rows. A row consists of a fixed number of 14-bit program memory words. A row is the minimum size that can be erased by user software.

After a row has been erased, the user can reprogram all or a portion of this row. Data to be written into the program memory row is written to 14-bit wide data write latches. These write latches are not directly accessible to the user, but may be loaded via sequential writes to the PMDATH:PMDATL register pair.

Note:	If the user wants to modify only a portion of a previously programmed row, then the contents of the entire row must be read and saved in RAM prior to the erase. Then, new data and retained data can be written into the write latches to reprogram the row of Flash program memory. However, any unprogrammed locations can be written without first erasing the row. In this case, it is not necessary to save and rewrite the other previously programmed locations.

See Table 10-1 for Erase Row size and the number of write latches for Flash program memory.

TABLE 10-1: FLASH MEMORY ORGANIZATION BY DEVICE

Device	Row Erase (words)	Write Latches (words)
PIC16F1507	16	16
PIC16LF1507		

 © 2011 Microchip Technology Inc.

10.2.1 READING THE FLASH PROGRAM MEMORY

To read a program memory location, the user must:

1. Write the desired address to the PMADRH:PMADRL register pair.
2. Clear the CFGS bit of the PMCON1 register.
3. Then, set control bit RD of the PMCON1 register.

Once the read control bit is set, the program memory Flash controller will use the second instruction cycle to read the data. This causes the second instruction immediately following the "BSF PMCON1,RD" instruction to be ignored. The data is available in the very next cycle, in the PMDATH:PMDATL register pair; therefore, it can be read as two bytes in the following instructions.

PMDATH:PMDATL register pair will hold this value until another read or until it is written to by the user.

Note:	The two instructions following a program memory read are required to be NOPs. This prevents the user from executing a two-cycle instruction on the next instruction after the RD bit is set.

FIGURE 10-1: FLASH PROGRAM MEMORY READ FLOWCHART

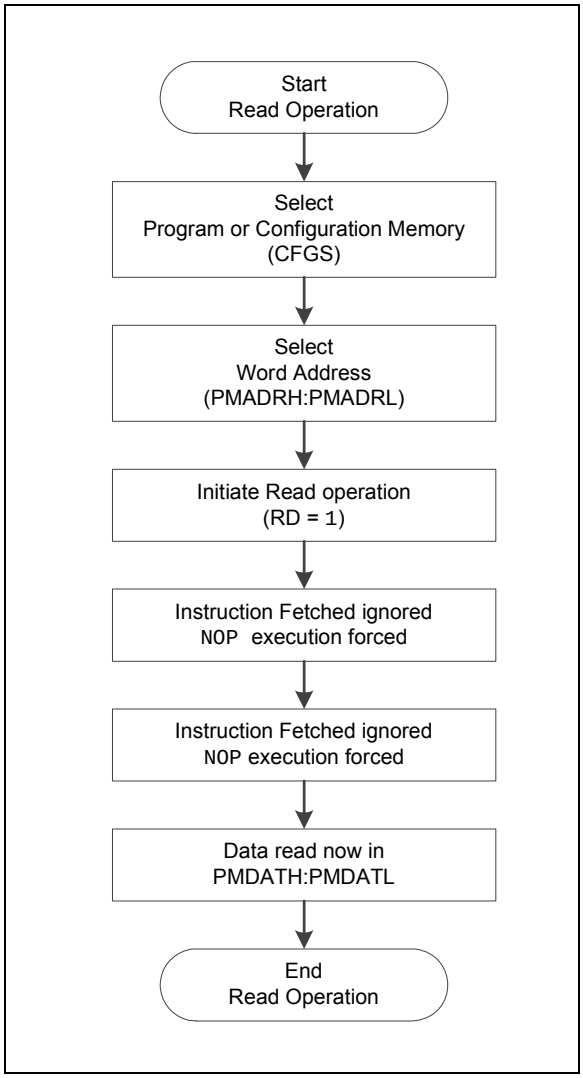

FIGURE 10-2: FLASH PROGRAM MEMORY READ CYCLE EXECUTION

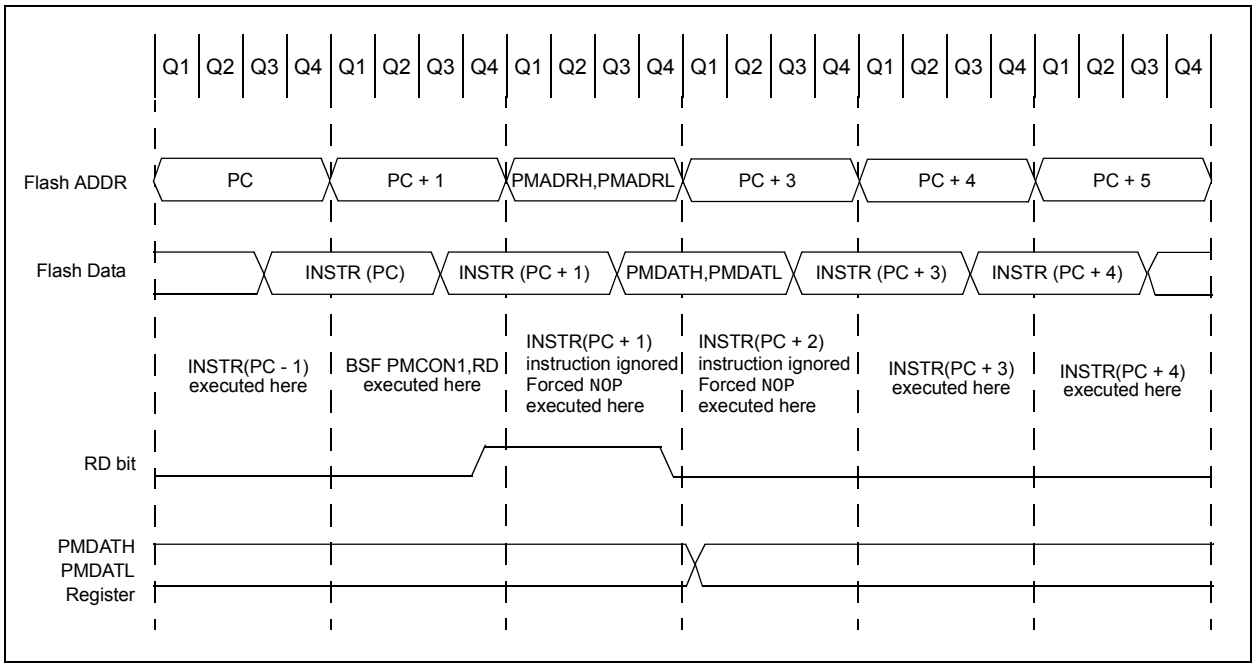

EXAMPLE 10-1: FLASH PROGRAM MEMORY READ

```
* This code block will read 1 word of program
* memory at the memory address:
    PROG_ADDR_HI: PROG_ADDR_LO
*   data will be returned in the variables;
*   PROG_DATA_HI, PROG_DATA_LO

    BANKSEL  PMADRL           ; Select Bank for PMCON registers
    MOVLW    PROG_ADDR_LO     ;
    MOVWF    PMADRL           ; Store LSB of address
    MOVLW    PROG_ADDR_HI     ;
    MOVWF    PMADRH           ; Store MSB of address

    BCF      PMCON1,CFGS      ; Do not select Configuration Space
    BSF      PMCON1,RD        ; Initiate read
    NOP                       ; Ignored (Figure 10-2)
    NOP                       ; Ignored (Figure 10-2)

    MOVF     PMDATL,W         ; Get LSB of word
    MOVWF    PROG_DATA_LO     ; Store in user location
    MOVF     PMDATH,W         ; Get MSB of word
    MOVWF    PROG_DATA_HI     ; Store in user location
```

 © 2011 Microchip Technology Inc.

10.2.2 FLASH MEMORY UNLOCK SEQUENCE

The unlock sequence is a mechanism that protects the Flash program memory from unintended self-write programming or erasing. The sequence must be executed and completed without interruption to successfully complete any of the following operations:

- Row Erase
- Load program memory write latches
- Write of program memory write latches to program memory
- Write of program memory write latches to User IDs

The unlock sequence consists of the following steps:

1. Write 55h to PMCON2
2. Write AAh to PMCON2
3. Set the WR bit in PMCON1
4. NOP instruction
5. NOP instruction

Once the WR bit is set, the processor will always force two NOP instructions. When an Erase Row or Program Row operation is being performed, the processor will stall internal operations (typical 2 ms), until the operation is complete and then resume with the next instruction. When the operation is loading the program memory write latches, the processor will always force the two NOP instructions and continue uninterrupted with the next instruction.

Since the unlock sequence must not be interrupted, global interrupts should be disabled prior to the unlock sequence and re-enabled after the unlock sequence is completed.

FIGURE 10-3: FLASH PROGRAM MEMORY UNLOCK SEQUENCE FLOWCHART

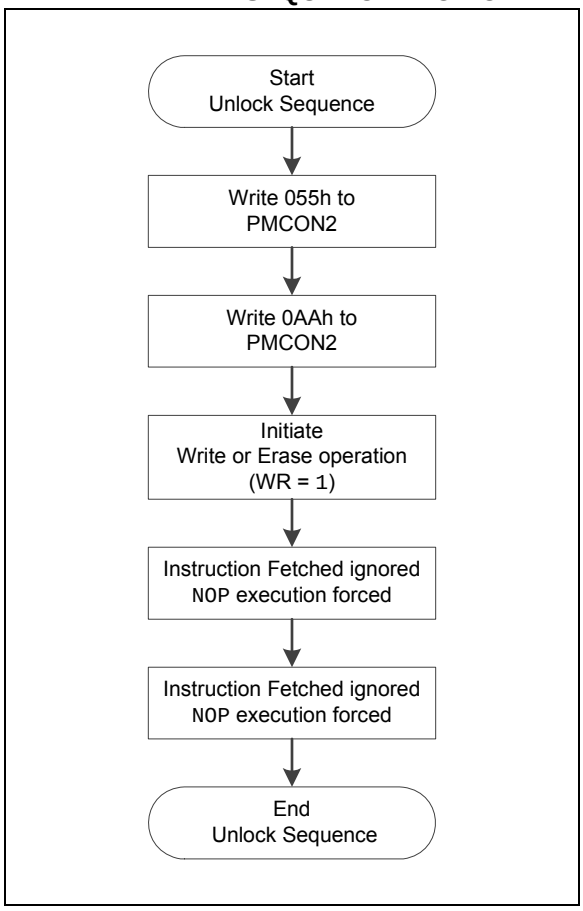

10.2.3 ERASING FLASH PROGRAM MEMORY

While executing code, program memory can only be erased by rows. To erase a row:

1. Load the PMADRH:PMADRL register pair with any address within the row to be erased.
2. Clear the CFGS bit of the PMCON1 register.
3. Set the FREE and WREN bits of the PMCON1 register.
4. Write 55h, then AAh, to PMCON2 (Flash programming unlock sequence).
5. Set control bit WR of the PMCON1 register to begin the erase operation.

See Example 10-2.

After the "`BSF PMCON1,WR`" instruction, the processor requires two cycles to set up the erase operation. The user must place two `NOP` instructions immediately following the WR bit set instruction. The processor will halt internal operations for the typical 2 ms erase time. This is not Sleep mode as the clocks and peripherals will continue to run. After the erase cycle, the processor will resume operation with the third instruction after the PMCON1 write instruction.

FIGURE 10-4: FLASH PROGRAM MEMORY ERASE FLOWCHART

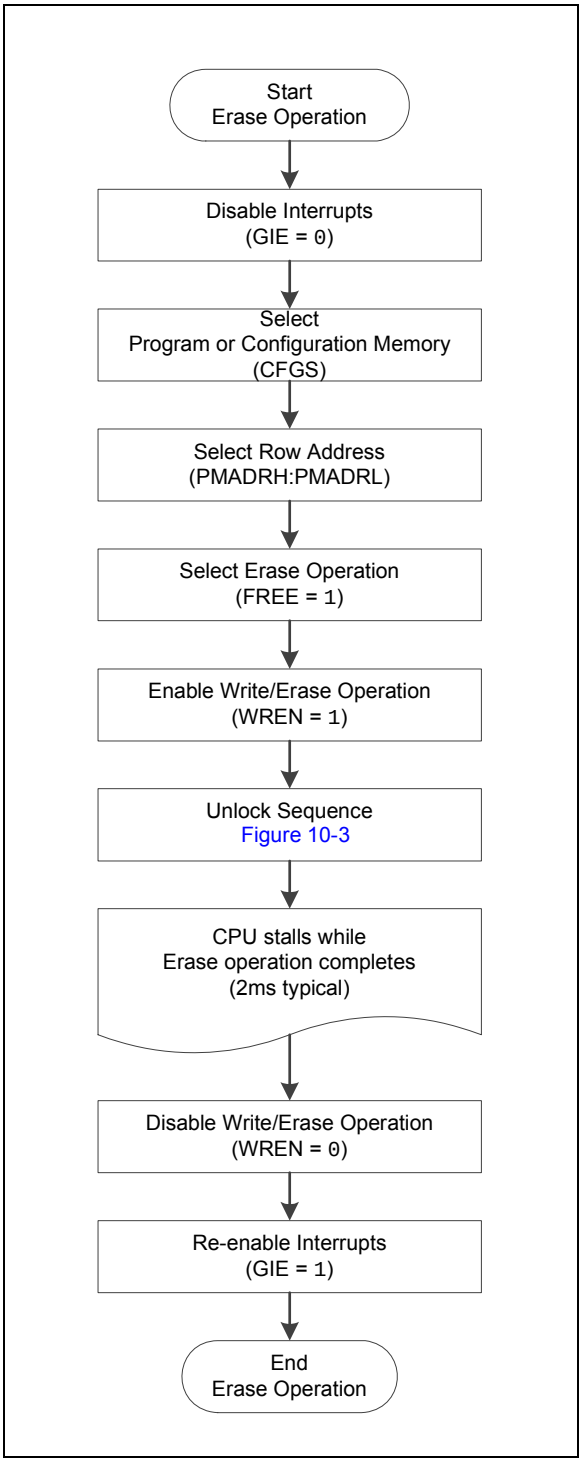

 © 2011 Microchip Technology Inc.

EXAMPLE 10-2: ERASING ONE ROW OF PROGRAM MEMORY

```
; This row erase routine assumes the following:
; 1. A valid address within the erase row is loaded in ADDRH:ADDRL
; 2. ADDRH and ADDRL are located in shared data memory 0x70 - 0x7F (common RAM)


        BCF         INTCON,GIE      ; Disable ints so required sequences will execute properly
        BANKSEL     PMADRL
        MOVF        ADDRL,W         ; Load lower 8 bits of erase address boundary
        MOVWF       PMADRL
        MOVF        ADDRH,W         ; Load upper 6 bits of erase address boundary
        MOVWF       PMADRH
        BCF         PMCON1,CFGS     ; Not configuration space
        BSF         PMCON1,FREE     ; Specify an erase operation
        BSF         PMCON1,WREN     ; Enable writes

Required
Sequence
        MOVLW       55h             ; Start of required sequence to initiate erase
        MOVWF       PMCON2          ; Write 55h
        MOVLW       0AAh            ;
        MOVWF       PMCON2          ; Write AAh
        BSF         PMCON1,WR       ; Set WR bit to begin erase
        NOP                         ; NOP instructions are forced as processor starts
        NOP                         ; row erase of program memory.
                                    ;
                                    ; The processor stalls until the erase process is complete
                                    ; after erase processor continues with 3rd instruction

        BCF         PMCON1,WREN     ; Disable writes
        BSF         INTCON,GIE      ; Enable interrupts
```

10.2.4 WRITING TO FLASH PROGRAM MEMORY

Program memory is programmed using the following steps:

1. Load the address in PMADRH:PMADRL of the row to be programmed.
2. Load each write latch with data.
3. Initiate a programming operation.
4. Repeat steps 1 through 3 until all data is written.

Before writing to program memory, the word(s) to be written must be erased or previously unwritten. Program memory can only be erased one row at a time. No automatic erase occurs upon the initiation of the write.

Program memory can be written one or more words at a time. The maximum number of words written at one time is equal to the number of write latches. See Figure 10-5 (row writes to program memory with 16 write latches) for more details.

The write latches are aligned to the Flash row address boundary defined by the upper 11-bits of PMADRH:PMADRL, (PMADRH<6:0>:PMADRL<7:4>) with the lower 4-bits of PMADRL, (PMADRL<3:0>) determining the write latch being loaded. Write operations do not cross these boundaries. At the completion of a program memory write operation, the data in the write latches is reset to contain 0x3FFF.

The following steps should be completed to load the write latches and program a row of program memory. These steps are divided into two parts. First, each write latch is loaded with data from the PMDATH:PMDATL using the unlock sequence with LWLO = 1. When the last word to be loaded into the write latch is ready, the LWLO bit is cleared and the unlock sequence executed. This initiates the programming operation, writing all the latches into Flash program memory.

Note:	The special unlock sequence is required to load a write latch with data or initiate a Flash programming operation. If the unlock sequence is interrupted, writing to the latches or program memory will not be initiated.

1. Set the WREN bit of the PMCON1 register.
2. Clear the CFGS bit of the PMCON1 register.
3. Set the LWLO bit of the PMCON1 register. When the LWLO bit of the PMCON1 register is '1', the write sequence will only load the write latches and will not initiate the write to Flash program memory.
4. Load the PMADRH:PMADRL register pair with the address of the location to be written.
5. Load the PMDATH:PMDATL register pair with the program memory data to be written.
6. Execute the unlock sequence (**Section 10.2.2 "Flash Memory Unlock Sequence"**). The write latch is now loaded.
7. Increment the PMADRH:PMADRL register pair to point to the next location.
8. Repeat steps 5 through 7 until all but the last write latch has been loaded.
9. Clear the LWLO bit of the PMCON1 register. When the LWLO bit of the PMCON1 register is '0', the write sequence will initiate the write to Flash program memory.
10. Load the PMDATH:PMDATL register pair with the program memory data to be written.
11. Execute the unlock sequence (**Section 10.2.2 "Flash Memory Unlock Sequence"**). The entire program memory latch content is now written to Flash program memory.

Note:	The program memory write latches are reset to the blank state (0x3FFF) at the completion of every write or erase operation. As a result, it is not necessary to load all the program memory write latches. Unloaded latches will remain in the blank state.

An example of the complete write sequence is shown in Example 10-3. The initial address is loaded into the PMADRH:PMADRL register pair; the data is loaded using indirect addressing.

 © 2011 Microchip Technology Inc.

FIGURE 10-5: BLOCK WRITES TO FLASH PROGRAM MEMORY WITH 16 WRITE LATCHES

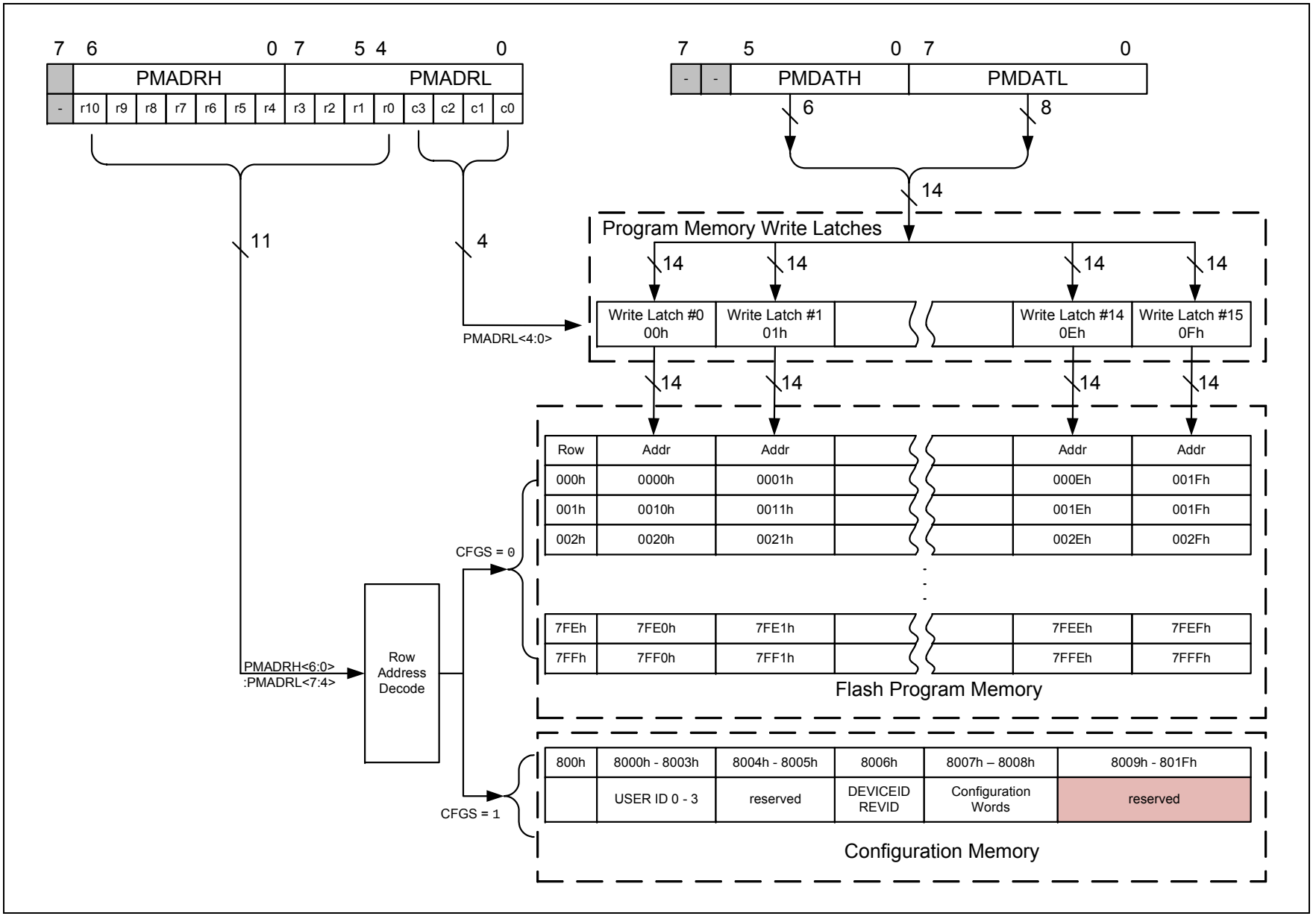

Preliminary
© 2011 Microchip Technology Inc.

FIGURE 10-6: FLASH PROGRAM MEMORY WRITE FLOWCHART

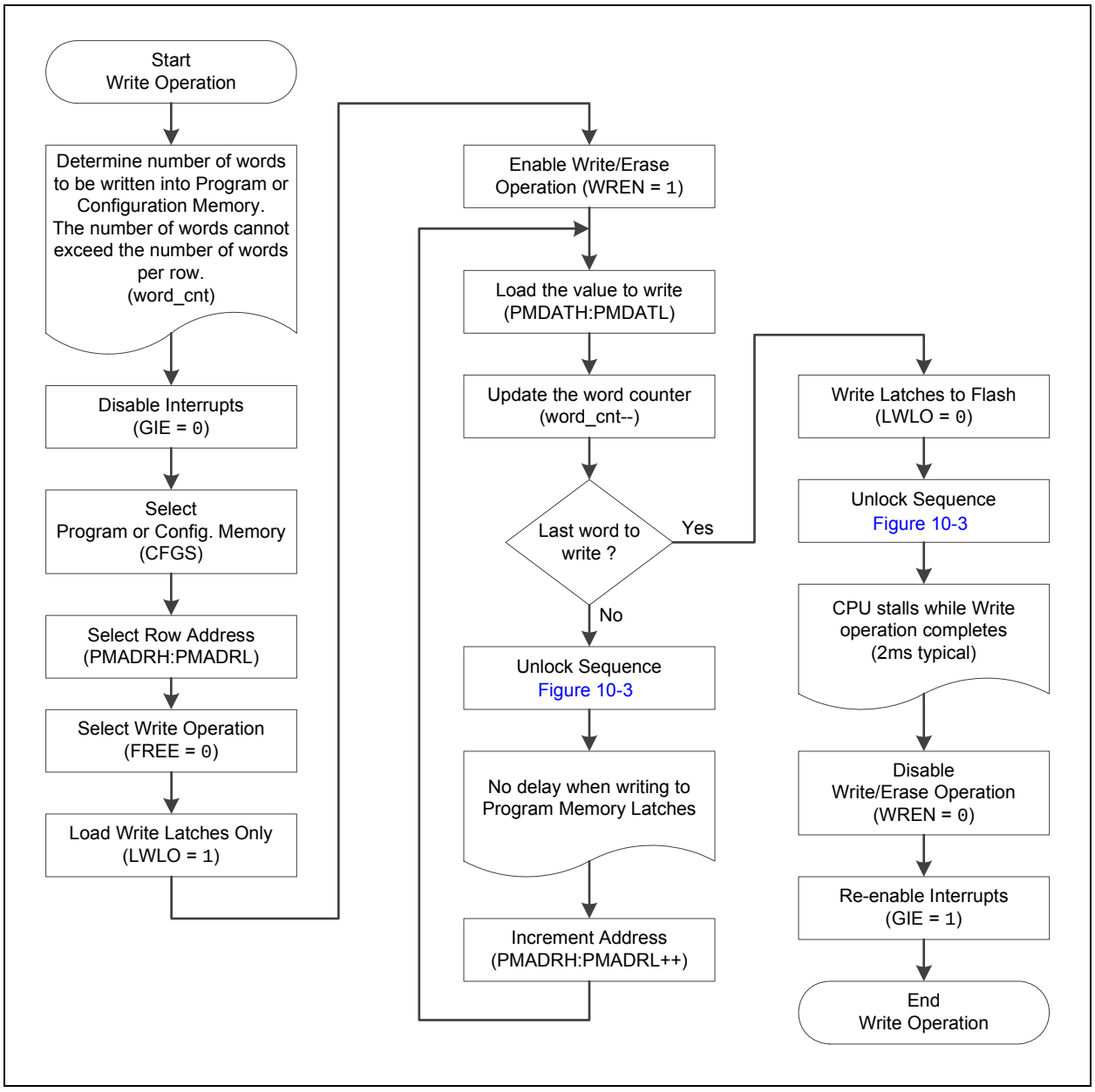

 © 2011 Microchip Technology Inc.

EXAMPLE 10-3: WRITING TO FLASH PROGRAM MEMORY

```
; This write routine assumes the following:
; 1. 32 bytes of data are loaded, starting at the address in DATA_ADDR
; 2. Each word of data to be written is made up of two adjacent bytes in DATA_ADDR,
; stored in little endian format
; 3. A valid starting address (the least significant bits = 00000) is loaded in ADDRH:ADDRL
; 4. ADDRH and ADDRL are located in shared data memory 0x70 - 0x7F (common RAM)
;
        BCF         INTCON,GIE      ; Disable ints so required sequences will execute properly
        BANKSEL     PMADRH          ; Bank 3
        MOVF        ADDRH,W         ; Load initial address
        MOVWF       PMADRH          ;
        MOVF        ADDRL,W         ;
        MOVWF       PMADRL          ;
        MOVLW       LOW DATA_ADDR   ; Load initial data address
        MOVWF       FSR0L           ;
        MOVLW       HIGH DATA_ADDR  ; Load initial data address
        MOVWF       FSR0H           ;
        BCF         PMCON1,CFGS     ; Not configuration space
        BSF         PMCON1,WREN     ; Enable writes
        BSF         PMCON1,LWLO     ; Only Load Write Latches
LOOP
        MOVIW       FSR0++          ; Load first data byte into lower
        MOVWF       PMDATL          ;
        MOVIW       FSR0++          ; Load second data byte into upper
        MOVWF       PMDATH          ;

        MOVF        PMADRL,W        ; Check if lower bits of address are '00000'
        XORLW       0x0F            ; Check if we're on the last of 16 addresses
        ANDLW       0x0F            ;
        BTFSC       STATUS,Z        ; Exit if last of 16 words,
        GOTO        START_WRITE     ;

  Required Sequence
        MOVLW       55h             ; Start of required write sequence:
        MOVWF       PMCON2          ; Write 55h
        MOVLW       0AAh            ;
        MOVWF       PMCON2          ; Write AAh
        BSF         PMCON1,WR       ; Set WR bit to begin write
        NOP                         ; NOP instructions are forced as processor
                                    ; loads program memory write latches
        NOP                         ;

        INCF        PMADRL,F        ; Still loading latches Increment address
        GOTO        LOOP            ; Write next latches

START_WRITE
        BCF         PMCON1,LWLO     ; No more loading latches - Actually start Flash program
                                    ; memory write

  Required Sequence
        MOVLW       55h             ; Start of required write sequence:
        MOVWF       PMCON2          ; Write 55h
        MOVLW       0AAh            ;
        MOVWF       PMCON2          ; Write AAh
        BSF         PMCON1,WR       ; Set WR bit to begin write
        NOP                         ; NOP instructions are forced as processor writes
                                    ; all the program memory write latches simultaneously
        NOP                         ; to program memory.
                                    ; After NOPs, the processor
                                    ; stalls until the self-write process in complete
                                    ; after write processor continues with 3rd instruction
        BCF         PMCON1,WREN     ; Disable writes
        BSF         INTCON,GIE      ; Enable interrupts
```

10.3 Modifying Flash Program Memory

When modifying existing data in a program memory row, and data within that row must be preserved, it must first be read and saved in a RAM image. Program memory is modified using the following steps:

1. Load the starting address of the row to be modified.
2. Read the existing data from the row into a RAM image.
3. Modify the RAM image to contain the new data to be written into program memory.
4. Load the starting address of the row to be rewritten.
5. Erase the program memory row.
6. Load the write latches with data from the RAM image.
7. Initiate a programming operation.

FIGURE 10-7: FLASH PROGRAM MEMORY MODIFY FLOWCHART

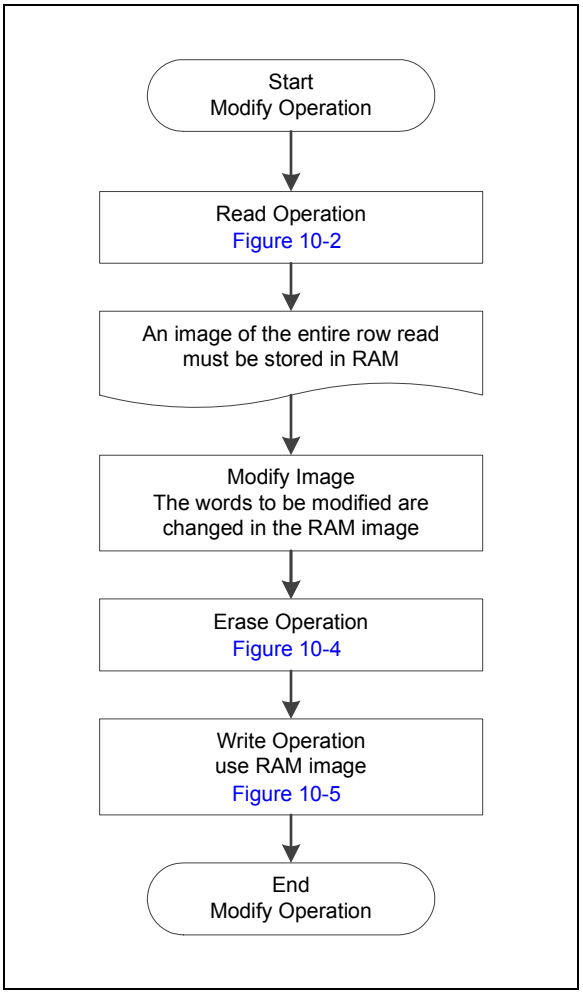

 © 2011 Microchip Technology Inc.

10.4 User ID, Device ID and Configuration Word Access

Instead of accessing program memory, the User ID's, Device ID/Revision ID and Configuration Words can be accessed when CFGS = 1 in the PMCON1 register. This is the region that would be pointed to by PC<15> = 1, but not all addresses are accessible. Different access may exist for reads and writes. Refer to Table 10-2.

When read access is initiated on an address outside the parameters listed in Table 10-2, the PMDATH:PMDATL register pair is cleared, reading back '0's.

TABLE 10-2: USER ID, DEVICE ID AND CONFIGURATION WORD ACCESS (CFGS = 1)

Address	Function	Read Access	Write Access
8000h-8003h	User IDs	Yes	Yes
8006h	Device ID/Revision ID	Yes	No
8007h-8008h	Configuration Words 1 and 2	Yes	No

EXAMPLE 10-4: CONFIGURATION WORD AND DEVICE ID ACCESS

```
* This code block will read 1 word of program memory at the memory address:
*   PROG_ADDR_LO (must be 00h-08h) data will be returned in the variables;
*   PROG_DATA_HI, PROG_DATA_LO

    BANKSEL  PMADRL           ; Select correct Bank
    MOVLW    PROG_ADDR_LO     ;
    MOVWF    PMADRL           ; Store LSB of address
    CLRF     PMADRH           ; Clear MSB of address

    BSF      PMCON1,CFGS      ; Select Configuration Space
    BCF      INTCON,GIE       ; Disable interrupts
    BSF      PMCON1,RD        ; Initiate read
    NOP                       ; Executed (See Figure 10-2)
    NOP                       ; Ignored (See Figure 10-2)
    BSF      INTCON,GIE       ; Restore interrupts

    MOVF     PMDATL,W         ; Get LSB of word
    MOVWF    PROG_DATA_LO     ; Store in user location
    MOVF     PMDATH,W         ; Get MSB of word
    MOVWF    PROG_DATA_HI     ; Store in user location
```

10.5 Write Verify

It is considered good programming practice to verify that program memory writes agree with the intended value. Since program memory is stored as a full page then the stored program memory contents are compared with the intended data stored in RAM after the last write is complete.

FIGURE 10-8: FLASH PROGRAM MEMORY VERIFY FLOWCHART

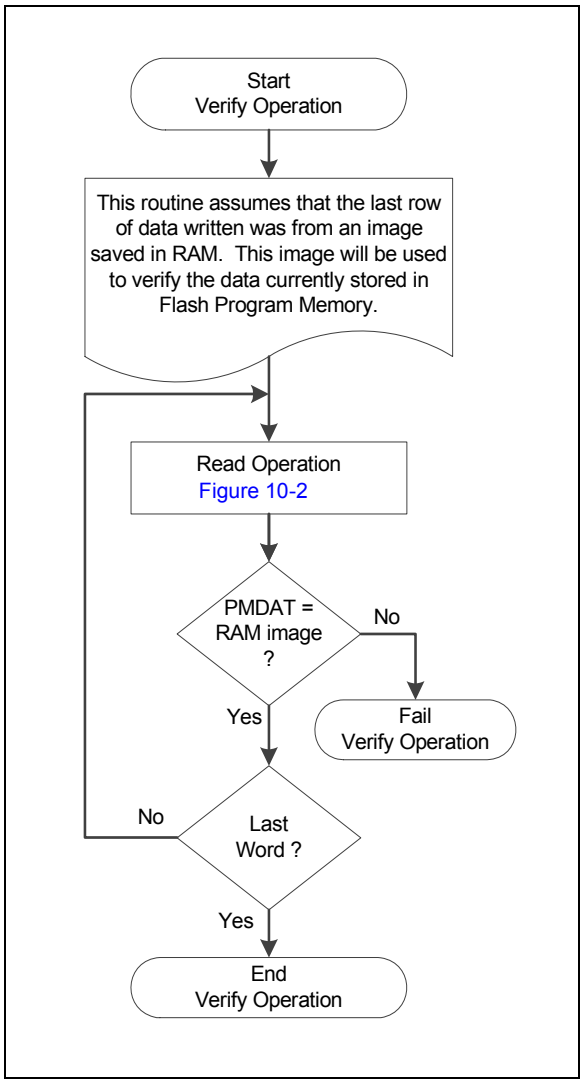

 © 2011 Microchip Technology Inc.

10.6 Flash Program Memory Control Registers

REGISTER 10-1: PMDATL: PROGRAM MEMORY DATA LOW BYTE REGISTER

R/W-x/u	R/W-x/u	R/W-x/u	R/W-x/u	R/W-x/u	R/W-x/u	R/W-x/u	R/W-x/u
PMDAT<7:0>							
bit 7							bit 0

Legend:		
R = Readable bit	W = Writable bit	U = Unimplemented bit, read as ‘0’
u = Bit is unchanged	x = Bit is unknown	-n/n = Value at POR and BOR/Value at all other Resets
‘1’ = Bit is set	‘0’ = Bit is cleared	

bit 7-0 **PMDAT<7:0>**: Read/write value for Least Significant bits of program memory

REGISTER 10-2: PMDATH: PROGRAM MEMORY DATA HIGH BYTE REGISTER

U-0	U-0	R/W-x/u	R/W-x/u	R/W-x/u	R/W-x/u	R/W-x/u	R/W-x/u
—	—	PMDAT<13:8>					
bit 7							bit 0

Legend:		
R = Readable bit	W = Writable bit	U = Unimplemented bit, read as ‘0’
u = Bit is unchanged	x = Bit is unknown	-n/n = Value at POR and BOR/Value at all other Resets
‘1’ = Bit is set	‘0’ = Bit is cleared	

bit 7-6 **Unimplemented:** Read as ‘0’

bit 5-0 **PMDAT<13:8>**: Read/write value for Most Significant bits of program memory

REGISTER 10-3: PMADRL: PROGRAM MEMORY ADDRESS LOW BYTE REGISTER

R/W-0/0	R/W-0/0	R/W-0/0	R/W-0/0	R/W-0/0	R/W-0/0	R/W-0/0	R/W-0/0
PMADR<7:0>							
bit 7							bit 0

Legend:		
R = Readable bit	W = Writable bit	U = Unimplemented bit, read as ‘0’
u = Bit is unchanged	x = Bit is unknown	-n/n = Value at POR and BOR/Value at all other Resets
‘1’ = Bit is set	‘0’ = Bit is cleared	

bit 7-0 **PMADR<7:0>**: Specifies the Least Significant bits for program memory address

REGISTER 10-4: PMADRH: PROGRAM MEMORY ADDRESS HIGH BYTE REGISTER

U-1	R/W-0/0	R/W-0/0	R/W-0/0	R/W-0/0	R/W-0/0	R/W-0/0	R/W-0/0
—	PMADR<14:8>						
bit 7							bit 0

Legend:		
R = Readable bit	W = Writable bit	U = Unimplemented bit, read as ‘0’
u = Bit is unchanged	x = Bit is unknown	-n/n = Value at POR and BOR/Value at all other Resets
‘1’ = Bit is set	‘0’ = Bit is cleared	

bit 7 **Unimplemented:** Read as ‘1’

bit 6-0 **PMADR<14:8>**: Specifies the Most Significant bits for program memory address

REGISTER 10-5: PMCON1: PROGRAM MEMORY CONTROL 1 REGISTER

U-1[1]	R/W-0/0	R/W-0/0	R/W/HC-0/0	R/W/HC-x/q	R/W-0/0	R/S/HC-0/0	R/S/HC-0/0
—	CFGS	LWLO	FREE	WRERR	WREN	WR	RD
bit 7							bit 0

Legend:		
R = Readable bit	W = Writable bit	U = Unimplemented bit, read as '0'
S = Bit can only be set	x = Bit is unknown	-n/n = Value at POR and BOR/Value at all other Resets
'1' = Bit is set	'0' = Bit is cleared	HC = Bit is cleared by hardware

bit 7 **Unimplemented:** Read as '1'

bit 6 **CFGS:** Configuration Select bit
- 1 = Access Configuration, User ID and Device ID Registers
- 0 = Access Flash program memory

bit 5 **LWLO:** Load Write Latches Only bit[3]
- 1 = Only the addressed program memory write latch is loaded/updated on the next WR command
- 0 = The addressed program memory write latch is loaded/updated and a write of all program memory write latches will be initiated on the next WR command

bit 4 **FREE:** Program Flash Erase Enable bit
- 1 = Performs an erase operation on the next WR command (hardware cleared upon completion)
- 0 = Performs an write operation on the next WR command

bit 3 **WRERR:** Program/Erase Error Flag bit[2]
- 1 = Condition indicates an improper program or erase sequence attempt or termination (bit is set automatically on any set attempt (write '1') of the WR bit).
- 0 = The program or erase operation completed normally

bit 2 **WREN:** Program/Erase Enable bit
- 1 = Allows program/erase cycles
- 0 = Inhibits programming/erasing of program Flash

bit 1 **WR:** Write Control bit
- 1 = Initiates a program Flash program/erase operation.
  The operation is self-timed and the bit is cleared by hardware once operation is complete.
  The WR bit can only be set (not cleared) in software.
- 0 = Program/erase operation to the Flash is complete and inactive

bit 0 **RD:** Read Control bit
- 1 = Initiates a program Flash read. Read takes one cycle. RD is cleared in hardware. The RD bit can only be set (not cleared) in software.
- 0 = Does not initiate a program Flash read

Note 1: Unimplemented bit, read as '1'.
2: The WRERR bit is automatically set by hardware when a program memory write or erase operation is started (WR = 1).
3: The LWLO bit is ignored during a program memory erase operation (FREE = 1).

 © 2011 Microchip Technology Inc.

REGISTER 10-6: PMCON2: PROGRAM MEMORY CONTROL 2 REGISTER

W-0/0	W-0/0	W-0/0	W-0/0	W-0/0	W-0/0	W-0/0	W-0/0
Program Memory Control Register 2							
bit 7							bit 0

Legend:		
R = Readable bit	W = Writable bit	U = Unimplemented bit, read as '0'
S = Bit can only be set	x = Bit is unknown	-n/n = Value at POR and BOR/Value at all other Resets
'1' = Bit is set	'0' = Bit is cleared	

bit 7-0 **Flash memory Unlock Pattern bits**

To unlock writes, a 55h must be written first, followed by an AAh, before setting the WR bit of the PMCON1 register. The value written to this register is used to unlock the writes. There are specific timing requirements on these writes.

TABLE 10-3: SUMMARY OF REGISTERS ASSOCIATED WITH FLASH PROGRAM MEMORY

Name	Bit 7	Bit 6	Bit 5	Bit 4	Bit 3	Bit 2	Bit 1	Bit 0	Register on Page
PMCON1	—	CFGS	LWLO	FREE	WRERR	WREN	WR	RD	97
PMCON2	Program Memory Control Register 2								98
PMADRL	PMADRL<7:0>								96
PMADRH	—	PMADRH<6:0>							96
PMDATL	PMDATL<7:0>								96
PMDATH	—	—	PMDATH<5:0>						96
INTCON	GIE	PEIE	TMR0IE	INTE	IOCIE	TMR0IF	INTF	IOCIF	66

Legend: — = unimplemented location, read as '0'. Shaded cells are not used by Flash program memory module.

TABLE 10-4: SUMMARY OF CONFIGURATION WORD WITH FLASH PROGRAM MEMORY

Name	Bits	Bit -/7	Bit -/6	Bit 13/5	Bit 12/4	Bit 11/3	Bit 10/2	Bit 9/1	Bit 8/0	Register on Page
CONFIG1	13:8	—	—	—	—	$\overline{\text{CLKOUTEN}}$	BOREN<1:0>		—	40
	7:0	$\overline{\text{CP}}$	MCLRE	$\overline{\text{PWRTE}}$	WDTE<1:0>		—	FOSC<1:0>		
CONFIG2	13:8	—	—	LVP	—	$\overline{\text{LPBOR}}$	BORV	STVREN	—	41
	7:0	—	—	—	—	—	—	WRT<1:0>		

Legend: — = unimplemented location, read as '0'. Shaded cells are not used by Flash program memory.

11.0 I/O PORTS

Each port has three standard registers for its operation. These registers are:

- TRISx registers (data direction)
- PORTx registers (reads the levels on the pins of the device)
- LATx registers (output latch)

Some ports may have one or more of the following additional registers. These registers are:

- ANSELx (analog select)
- WPUx (weak pull-up)

In general, when a peripheral is enabled on a port pin, that pin cannot be used as a general purpose output. However, the pin can still be read.

TABLE 11-1: PORT AVAILABILITY PER DEVICE

Device	PORTA	PORTB	PORTC
PIC16(L)F1507	•	•	•

The Data Latch (LATx registers) is useful for read-modify-write operations on the value that the I/O pins are driving.

A write operation to the LATx register has the same effect as a write to the corresponding PORTx register. A read of the LATx register reads of the values held in the I/O PORT latches, while a read of the PORTx register reads the actual I/O pin value.

Ports that support analog inputs have an associated ANSELx register. When an ANSEL bit is set, the digital input buffer associated with that bit is disabled. Disabling the input buffer prevents analog signal levels on the pin between a logic high and low from causing excessive current in the logic input circuitry. A simplified model of a generic I/O port, without the interfaces to other peripherals, is shown in Figure 11-1.

FIGURE 11-1: GENERIC I/O PORT OPERATION

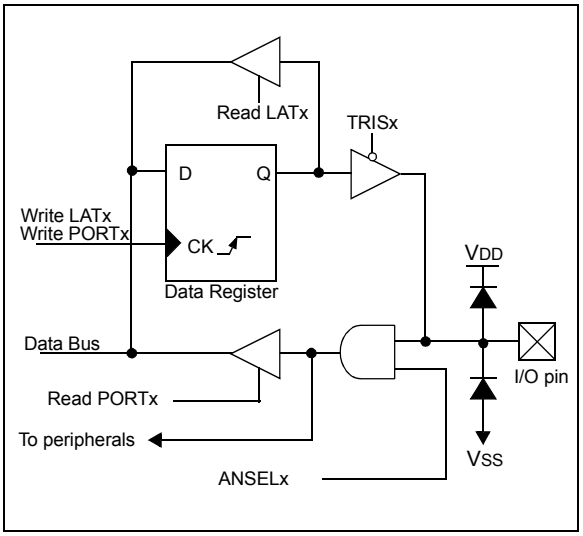

© 2011 Microchip Technology Inc.

11.1 Alternate Pin Function

The Alternate Pin Function Control register is used to steer specific peripheral input and output functions between different pins. The APFCON register is shown in Register 11-1. For this device family, the following functions can be moved between different pins.

- CLC1
- NCO1

These bits have no effect on the values of any TRIS register. PORT and TRIS overrides will be routed to the correct pin. The unselected pin will be unaffected.

REGISTER 11-1: APFCON: ALTERNATE PIN FUNCTION CONTROL REGISTER

U-0	U-0	U-0	U-0	U-0	U-0	R/W-0/0	R/W-0/0
—	—	—	—	—	—	CLC1SEL	NCO1SEL
bit 7							bit 0

Legend:		
R = Readable bit	W = Writable bit	U = Unimplemented bit, read as ‘0’
u = Bit is unchanged	x = Bit is unknown	-n/n = Value at POR and BOR/Value at all other Resets
‘1’ = Bit is set	‘0’ = Bit is cleared	

bit 7-2 **Unimplemented:** Read as ‘0’

bit 1 **CLC1SEL:** Pin Selection bit
1 = CLC1 function is on RC5
0 = CLC1 function is on RA2

bit 0 **NCO1SEL:** Pin Selection bit
1 = NCO1 function is on RC6
0 = NCO1 function is on RC1

11.2 PORTA Registers

PORTA is a 6-bit wide, bidirectional port. The corresponding data direction register is TRISA (Register 11-3). Setting a TRISA bit (= 1) will make the corresponding PORTA pin an input (i.e., disable the output driver). Clearing a TRISA bit (= 0) will make the corresponding PORTA pin an output (i.e., enables output driver and puts the contents of the output latch on the selected pin). The exception is RA3, which is input only and its TRIS bit will always read as '1'. Example 11-1 shows how to initialize an I/O port.

Reading the PORTA register (Register 11-2) reads the status of the pins, whereas writing to it will write to the PORT latch. All write operations are read-modify-write operations. Therefore, a write to a port implies that the port pins are read, this value is modified and then written to the PORT data latch (LATA).

The TRISA register (Register 11-3) controls the PORTA pin output drivers, even when they are being used as analog inputs. The user should ensure the bits in the TRISA register are maintained set when using them as analog inputs. I/O pins configured as analog input always read '0'.

11.2.1 ANSELA REGISTER

The ANSELA register (Register 11-5) is used to configure the Input mode of an I/O pin to analog. Setting the appropriate ANSELA bit high will cause all digital reads on the pin to be read as '0' and allow analog functions on the pin to operate correctly.

The state of the ANSELA bits has no effect on digital output functions. A pin with TRIS clear and ANSEL set will still operate as a digital output, but the Input mode will be analog. This can cause unexpected behavior when executing read-modify-write instructions on the affected port.

Note:	The ANSELA bits default to the Analog mode after Reset. To use any pins as digital general purpose or peripheral inputs, the corresponding ANSEL bits must be initialized to '0' by user software.

EXAMPLE 11-1: INITIALIZING PORTA

```
BANKSEL  PORTA       ;
CLRF     PORTA       ;Init PORTA
BANKSEL  LATA        ;Data Latch
CLRF     LATA        ;
BANKSEL  ANSELA      ;
CLRF     ANSELA      ;digital I/O
BANKSEL  TRISA       ;
MOVLW    B'00111000' ;Set RA<5:3> as inputs
MOVWF    TRISA       ;and set RA<2:0> as
                     ;outputs
```

11.2.2 PORTA FUNCTIONS AND OUTPUT PRIORITIES

Each PORTA pin is multiplexed with other functions. The pins, their combined functions and their output priorities are shown in Table 11-2.

When multiple outputs are enabled, the actual pin control goes to the peripheral with the highest priority.

Analog input functions, such as ADC and comparator inputs, are not shown in the priority lists. These inputs are active when the I/O pin is set for Analog mode using the ANSELx registers. Digital output functions may control the pin when it is in Analog mode with the priority shown below in Table 11-2.

TABLE 11-2: PORTA OUTPUT PRIORITY

Pin Name	Function Priority(1)
RA0	ICSPDAT RA0
RA1	RA1
RA2	CLC1(2) PWM3 RA2
RA3	None
RA4	CLKOUT RA4
RA5	RA5

Note 1: Priority listed from highest to lowest.
2: Default pin (see APFCON register).

© 2011 Microchip Technology Inc.

REGISTER 11-2: PORTA: PORTA REGISTER

U-0	U-0	R/W-x/x	R/W-x/x	R-x/x	R/W-x/x	R/W-x/x	R/W-x/x
—	—	RA5	RA4	RA3	RA2	RA1	RA0
bit 7							bit 0

Legend:		
R = Readable bit	W = Writable bit	U = Unimplemented bit, read as '0'
u = Bit is unchanged	x = Bit is unknown	-n/n = Value at POR and BOR/Value at all other Resets
'1' = Bit is set	'0' = Bit is cleared	

bit 7-6 **Unimplemented:** Read as '0'

bit 5-0 **RA<5:0>**: PORTA I/O Value bits(1)
1 = Port pin is ≥ VIH
0 = Port pin is ≤ VIL

Note 1: Writes to PORTA are actually written to corresponding LATA register. Reads from PORTA register is return of actual I/O pin values.

REGISTER 11-3: TRISA: PORTA TRI-STATE REGISTER

U-0	U-0	R/W-1/1	R/W-1/1	U-1	R/W-1/1	R/W-1/1	R/W-1/1
—	—	TRISA5	TRISA4	—(1)	TRISA2	TRISA1	TRISA0
bit 7							bit 0

Legend:		
R = Readable bit	W = Writable bit	U = Unimplemented bit, read as '0'
u = Bit is unchanged	x = Bit is unknown	-n/n = Value at POR and BOR/Value at all other Resets
'1' = Bit is set	'0' = Bit is cleared	

bit 7-6 **Unimplemented:** Read as '0'

bit 5-4 **TRISA<5:4>:** PORTA Tri-State Control bit
1 = PORTA pin configured as an input (tri-stated)
0 = PORTA pin configured as an output

bit 3 **Unimplemented:** Read as '1'

bit 2-0 **TRISA<2:0>:** PORTA Tri-State Control bit
1 = PORTA pin configured as an input (tri-stated)
0 = PORTA pin configured as an output

Note 1: Unimplemented, read as '1'.

REGISTER 11-4: LATA: PORTA DATA LATCH REGISTER

U-0	U-0	R/W-x/u	R/W-x/u	U-0	R/W-x/u	R/W-x/u	R/W-x/u
—	—	LATA5	LATA4	—	LATA2	LATA1	LATA0
bit 7							bit 0

Legend:		
R = Readable bit	W = Writable bit	U = Unimplemented bit, read as '0'
u = Bit is unchanged	x = Bit is unknown	-n/n = Value at POR and BOR/Value at all other Resets
'1' = Bit is set	'0' = Bit is cleared	

bit 7-6 **Unimplemented:** Read as '0'

bit 5-4 **LATA<5:4>**: RA<5:4> Output Latch Value bits(1)

bit 3 **Unimplemented:** Read as '0'

bit 2-0 **LATA<2:0>**: RA<2:0> Output Latch Value bits(1)

Note 1: Writes to PORTA are actually written to corresponding LATA register. Reads from PORTA register is return of actual I/O pin values.

REGISTER 11-5: ANSELA: PORTA ANALOG SELECT REGISTER

U-0	U-0	U-0	R/W-1/1	U-0	R/W-1/1	R/W-1/1	R/W-1/1
—	—	—	ANSA4	—	ANSA2	ANSA1	ANSA0
bit 7							bit 0

Legend:		
R = Readable bit	W = Writable bit	U = Unimplemented bit, read as '0'
u = Bit is unchanged	x = Bit is unknown	-n/n = Value at POR and BOR/Value at all other Resets
'1' = Bit is set	'0' = Bit is cleared	

bit 7-5 **Unimplemented:** Read as '0'

bit 4 **ANSA4**: Analog Select between Analog or Digital Function on pins RA4, respectively
1 = Analog input. Pin is assigned as analog input(1). Digital input buffer disabled.
0 = Digital I/O. Pin is assigned to port or digital special function.

bit 3 **Unimplemented:** Read as '0'

bit 2-0 **ANSA<2:0>**: Analog Select between Analog or Digital Function on pins RA<2:0>, respectively
1 = Analog input. Pin is assigned as analog input(1). Digital input buffer disabled.
0 = Digital I/O. Pin is assigned to port or digital special function.

Note 1: When setting a pin to an analog input, the corresponding TRIS bit must be set to Input mode in order to allow external control of the voltage on the pin.

 © 2011 Microchip Technology Inc.

REGISTER 11-6: WPUA: WEAK PULL-UP PORTA REGISTER

U-0	U-0	R/W-1/1	R/W-1/1	R/W-1/1	R/W-1/1	R/W-1/1	R/W-1/1
—	—	WPUA5	WPUA4	WPUA3	WPUA2	WPUA1	WPUA0
bit 7							bit 0

Legend:		
R = Readable bit	W = Writable bit	U = Unimplemented bit, read as '0'
u = Bit is unchanged	x = Bit is unknown	-n/n = Value at POR and BOR/Value at all other Resets
'1' = Bit is set	'0' = Bit is cleared	

bit 7-6 **Unimplemented:** Read as '0'

bit 5-0 **WPUA<5:0>**: Weak Pull-up Register bits(3)
1 = Pull-up enabled
0 = Pull-up disabled

Note 1: Global $\overline{\text{WPUEN}}$ bit of the OPTION_REG register must be cleared for individual pull-ups to be enabled.
2: The weak pull-up device is automatically disabled if the pin is in configured as an output.
3: For the WPUA3 bit, when MCLRE = 1, weak pull-up is internally enabled, but not reported here.

TABLE 11-3: SUMMARY OF REGISTERS ASSOCIATED WITH PORTA

Name	Bit 7	Bit 6	Bit 5	Bit 4	Bit 3	Bit 2	Bit 1	Bit 0	Register on Page
ANSELA	—	—	—	ANSA4	—	ANSA2	ANSA1	ANSA0	103
APFCON	—	—	—	—	—	—	CLC1SEL	NCO1SEL	100
LATA	—	—	LATA5	LATA4	—	LATA2	LATA1	LATA0	103
OPTION_REG	$\overline{\text{WPUEN}}$	INTEDG	TMR0CS	TMR0SE	PSA	PS<2:0>			137
PORTA	—	—	RA5	RA4	RA3	RA2	RA1	RA0	102
TRISA	—	—	TRISA5	TRISA4	—(1)	TRISA2	TRISA1	TRISA0	102
WPUA	—	—	WPUA5	WPUA4	WPUA3	WPUA2	WPUA1	WPUA0	104

Legend: x = unknown, u = unchanged, – = unimplemented locations read as '0'. Shaded cells are not used by PORTA.
Note 1: Unimplemented, read as '1'.

TABLE 11-4: SUMMARY OF CONFIGURATION WORD WITH PORTA

Name	Bits	Bit -/7	Bit -/6	Bit 13/5	Bit 12/4	Bit 11/3	Bit 10/2	Bit 9/1	Bit 8/0	Register on Page
CONFIG1	13:8	—	—	—	—	$\overline{\text{CLKOUTEN}}$	BOREN<1:0>		—	40
	7:0	$\overline{\text{CP}}$	MCLRE	$\overline{\text{PWRTE}}$	WDTE<1:0>		—	FOSC<1:0>		

Legend: — = unimplemented location, read as '0'. Shaded cells are not used by PORTA.

11.3 PORTB Registers

PORTB is a 4-bit wide, bidirectional port. The corresponding data direction register is TRISB (Register 11-8). Setting a TRISB bit (= 1) will make the corresponding PORTB pin an input (i.e., put the corresponding output driver in a High-Impedance mode). Clearing a TRISB bit (= 0) will make the corresponding PORTB pin an output (i.e., enable the output driver and put the contents of the output latch on the selected pin). Example 11-1 shows how to initialize an I/O port.

Reading the PORTB register (Register 11-7) reads the status of the pins, whereas writing to it will write to the PORT latch. All write operations are read-modify-write operations. Therefore, a write to a port implies that the port pins are read, this value is modified and then written to the PORT data latch (LATB).

The TRISB register (Register 11-8) controls the PORTB pin output drivers, even when they are being used as analog inputs. The user should ensure the bits in the TRISB register are maintained set when using them as analog inputs. I/O pins configured as analog input always read '0'.

11.3.1 ANSELB REGISTER

The ANSELB register (Register 11-10) is used to configure the Input mode of an I/O pin to analog. Setting the appropriate ANSELB bit high will cause all digital reads on the pin to be read as '0' and allow analog functions on the pin to operate correctly.

The state of the ANSELB bits has no effect on digital output functions. A pin with TRIS clear and ANSELB set will still operate as a digital output, but the Input mode will be analog. This can cause unexpected behavior when executing read-modify-write instructions on the affected port.

Note:	The ANSELB bits default to the Analog mode after Reset. To use any pins as digital general purpose or peripheral inputs, the corresponding ANSEL bits must be initialized to '0' by user software.

11.3.2 PORTB FUNCTIONS AND OUTPUT PRIORITIES

Each PORTB pin is multiplexed with other functions. The pins, their combined functions and their output priorities are shown in Table 11-5.

When multiple outputs are enabled, the actual pin control goes to the peripheral with the highest priority.

Analog input and some digital input functions are not included in the output priority list. These input functions can remain active when the pin is configured as an output. Certain digital input functions override other port functions and are included in the output priority list.

TABLE 11-5: PORTB OUTPUT PRIORITY

Pin Name	Function Priority(1)
RB4	RB4
RB5	RB5
RB6	RB6
RB7	RB7

Note 1: Priority listed from highest to lowest.
2: Default pin (see APFCON register).

© 2011 Microchip Technology Inc.

REGISTER 11-7: PORTB: PORTB REGISTER

R/W-x/u	R/W-x/u	R/W-x/u	R/W-x/u	U-0	U-0	U-0	U-0
RB7	RB6	RB5	RB4	—	—	—	—
bit 7							bit 0

Legend:		
R = Readable bit	W = Writable bit	U = Unimplemented bit, read as '0'
u = Bit is unchanged	x = Bit is unknown	-n/n = Value at POR and BOR/Value at all other Resets
'1' = Bit is set	'0' = Bit is cleared	

bit 7-4 **RB<7:4>**: PORTB General Purpose I/O Pin bits
1 = Port pin is ≥ VIH
0 = Port pin is ≤ VIL

bit 3-0 **Unimplemented:** Read as '0'

REGISTER 11-8: TRISB: PORTB TRI-STATE REGISTER

R/W-1/1	R/W-1/1	R/W-1/1	R/W-1/1	U-0	U-0	U-0	U-0
TRISB7	TRISB6	TRISB5	TRISB4	—	—	—	—
bit 7							bit 0

Legend:		
R = Readable bit	W = Writable bit	U = Unimplemented bit, read as '0'
u = Bit is unchanged	x = Bit is unknown	-n/n = Value at POR and BOR/Value at all other Resets
'1' = Bit is set	'0' = Bit is cleared	

bit 7-4 **TRISB<7:4>:** PORTB Tri-State Control bits
1 = PORTB pin configured as an input (tri-stated)
0 = PORTB pin configured as an output

bit 3-0 **Unimplemented:** Read as '0'

REGISTER 11-9: LATB: PORTB DATA LATCH REGISTER

R/W-x/u	R/W-x/u	R/W-x/u	R/W-x/u	U-0	U-0	U-0	U-0
LATB7	LATB6	LATB5	LATB4	—	—	—	—
bit 7							bit 0

Legend:		
R = Readable bit	W = Writable bit	U = Unimplemented bit, read as '0'
u = Bit is unchanged	x = Bit is unknown	-n/n = Value at POR and BOR/Value at all other Resets
'1' = Bit is set	'0' = Bit is cleared	

bit 7-4 **LATB<7:4>**: PORTB Output Latch Value bits(1)

bit 3-0 **Unimplemented:** Read as '0'

Note 1: Writes to PORTB are actually written to corresponding LATB register. Reads from PORTB register is return of actual I/O pin values.

REGISTER 11-10: ANSELB: PORTB ANALOG SELECT REGISTER

U-0	U-0	R/W-1/1	R/W-1/1	U-0	U-0	U-0	U-0
—	—	ANSB5	ANSB4	—	—	—	—
bit 7							bit 0

Legend:		
R = Readable bit	W = Writable bit	U = Unimplemented bit, read as '0'
u = Bit is unchanged	x = Bit is unknown	-n/n = Value at POR and BOR/Value at all other Resets
'1' = Bit is set	'0' = Bit is cleared	

bit 7-6 **Unimplemented:** Read as '0'

bit 5-4 **ANSB<5:4>**: Analog Select between Analog or Digital Function on pins RB<5:4>, respectively
1 = Analog input. Pin is assigned as analog input(1). Digital input buffer disabled.
0 = Digital I/O. Pin is assigned to port or digital special function.

bit 3-0 **Unimplemented:** Read as '0'

Note 1: When setting a pin to an analog input, the corresponding TRIS bit must be set to Input mode in order to allow external control of the voltage on the pin.

REGISTER 11-11: WPUB: WEAK PULL-UP PORTB REGISTER

R/W-1/1	R/W-1/1	R/W-1/1	R/W-1/1	U-0	U-0	U-0	U-0
WPUB7	WPUB6	WPUB5	WPUB4	—	—	—	—
bit 7							bit 0

Legend:		
R = Readable bit	W = Writable bit	U = Unimplemented bit, read as '0'
u = Bit is unchanged	x = Bit is unknown	-n/n = Value at POR and BOR/Value at all other Resets
'1' = Bit is set	'0' = Bit is cleared	

bit 7-4 **WPUB<7:4>**: Weak Pull-up Register bits
1 = Pull-up enabled
0 = Pull-up disabled

bit 3-0 **Unimplemented:** Read as '0'

Note 1: Global $\overline{\text{WPUEN}}$ bit of the OPTION_REG register must be cleared for individual pull-ups to be enabled.
2: The weak pull-up device is automatically disabled if the pin is in configured as an output.

TABLE 11-6: SUMMARY OF REGISTERS ASSOCIATED WITH PORTB

Name	Bit 7	Bit 6	Bit 5	Bit 4	Bit 3	Bit 2	Bit 1	Bit 0	Register on Page
ANSELB	—	—	ANSB5	ANSB4	—	—	—	—	107
LATB	LATB7	LATB6	LATB5	LATB4	—	—	—	—	106
PORTB	RB7	RB6	RB5	RB4	—	—	—	—	106
TRISB	TRISB7	TRISB6	TRISB5	TRISB4	—	—	—	—	106
WPUB	WPUB7	WPUB6	WPUB5	WPUB4	—	—	—	—	107

Legend: x = unknown, u = unchanged, - = unimplemented locations read as '0'. Shaded cells are not used by PORTB.

© 2011 Microchip Technology Inc.

11.4 PORTC Registers

PORTC is an 8-bit wide, bidirectional port. The corresponding data direction register is TRISC (Register 11-8). Setting a TRISC bit (= 1) will make the corresponding PORTC pin an input (i.e., put the corresponding output driver in a High-Impedance mode). Clearing a TRISC bit (= 0) will make the corresponding PORTC pin an output (i.e., enable the output driver and put the contents of the output latch on the selected pin). Example 11-1 shows how to initialize an I/O port.

Reading the PORTC register (Register 11-7) reads the status of the pins, whereas writing to it will write to the PORT latch. All write operations are read-modify-write operations. Therefore, a write to a port implies that the port pins are read, this value is modified and then written to the PORT data latch (LATC).

The TRISC register (Register 11-8) controls the PORTC pin output drivers, even when they are being used as analog inputs. The user should ensure the bits in the TRISC register are maintained set when using them as analog inputs. I/O pins configured as analog input always read '0'.

11.4.1 ANSELC REGISTER

The ANSELC register (Register 11-10) is used to configure the Input mode of an I/O pin to analog. Setting the appropriate ANSELC bit high will cause all digital reads on the pin to be read as '0' and allow analog functions on the pin to operate correctly.

The state of the ANSELC bits has no effect on digital output functions. A pin with TRIS clear and ANSELC set will still operate as a digital output, but the Input mode will be analog. This can cause unexpected behavior when executing read-modify-write instructions on the affected port.

Note:	The ANSELC bits default to the Analog mode after Reset. To use any pins as digital general purpose or peripheral inputs, the corresponding ANSEL bits must be initialized to '0' by user software.

11.4.2 PORTC FUNCTIONS AND OUTPUT PRIORITIES

Each PORTC pin is multiplexed with other functions. The pins, their combined functions and their output priorities are shown in Table 11-7.

When multiple outputs are enabled, the actual pin control goes to the peripheral with the highest priority.

Analog input and some digital input functions are not included in the output priority list. These input functions can remain active when the pin is configured as an output. Certain digital input functions override other port functions and are included in the output priority list.

TABLE 11-7: PORTC OUTPUT PRIORITY

Pin Name	Function Priority(1)
RC0	CLC2 RC0
RC1	NCO1(2) PWM4 RC1
RC2	RC2
RC3	PWM2 RC3
RC4	CWG1B RC4
RC5	CWG1A CLC1(3) PWM1 RC5
RC6	NCO1(3) RC6
RC7	RC7

Note 1: Priority listed from highest to lowest.
2: Default pin (see APFCON register).
3: Alternate pin (see APFCON register).

REGISTER 11-12: PORTC: PORTC REGISTER

R/W-x/u	R/W-x/u	R/W-x/u	R/W-x/u	R/W-x/u	R/W-x/u	R/W-x/u	R/W-x/u
RC7	RC6	RC5	RC4	RC3	RC2	RC1	RC0
bit 7							bit 0

Legend:		
R = Readable bit	W = Writable bit	U = Unimplemented bit, read as '0'
u = Bit is unchanged	x = Bit is unknown	-n/n = Value at POR and BOR/Value at all other Resets
'1' = Bit is set	'0' = Bit is cleared	

bit 7-0 **RC<7:0>**: PORTC General Purpose I/O Pin bits
1 = Port pin is $\geq V_{IH}$
0 = Port pin is $\leq V_{IL}$

REGISTER 11-13: TRISC: PORTC TRI-STATE REGISTER

R/W-1/1	R/W-1/1	R/W-1/1	R/W-1/1	R/W-1/1	R/W-1/1	R/W-1/1	R/W-1/1
TRISC7	TRISC6	TRISC5	TRISC4	TRISC3	TRISC2	TRISC1	TRISC0
bit 7							bit 0

Legend:		
R = Readable bit	W = Writable bit	U = Unimplemented bit, read as '0'
u = Bit is unchanged	x = Bit is unknown	-n/n = Value at POR and BOR/Value at all other Resets
'1' = Bit is set	'0' = Bit is cleared	

bit 7-0 **TRISC<7:0>:** PORTC Tri-State Control bits
1 = PORTC pin configured as an input (tri-stated)
0 = PORTC pin configured as an output

REGISTER 11-14: LATC: PORTC DATA LATCH REGISTER

R/W-x/u	R/W-x/u	R/W-x/u	R/W-x/u	R/W-x/u	R/W-x/u	R/W-x/u	R/W-x/u
LATC7	LATC6	LATC5	LATC4	LATC3	LATC2	LATC1	LATC0
bit 7							bit 0

Legend:		
R = Readable bit	W = Writable bit	U = Unimplemented bit, read as '0'
u = Bit is unchanged	x = Bit is unknown	-n/n = Value at POR and BOR/Value at all other Resets
'1' = Bit is set	'0' = Bit is cleared	

bit 7-0 **LATC<7:0>**: PORTC Output Latch Value bits(1)

Note 1: Writes to PORTC are actually written to corresponding LATC register. Reads from PORTC register is return of actual I/O pin values.

 © 2011 Microchip Technology Inc.

REGISTER 11-15: ANSELC: PORTC ANALOG SELECT REGISTER

R/W-1/1	R/W-1/1	U-0	U-0	R/W-1/1	R/W-1/1	R/W-1/1	R/W-1/1
ANSC7	ANSC6	—	—	ANSC3	ANSC2	ANSC1	ANSC0
bit 7							bit 0

Legend:		
R = Readable bit	W = Writable bit	U = Unimplemented bit, read as '0'
u = Bit is unchanged	x = Bit is unknown	-n/n = Value at POR and BOR/Value at all other Resets
'1' = Bit is set	'0' = Bit is cleared	

bit 7-6 **ANSC<7:6>**: Analog Select between Analog or Digital Function on pins RC<3:0>, respectively
1 = Analog input. Pin is assigned as analog input(1). Digital input buffer disabled.
0 = Digital I/O. Pin is assigned to port or digital special function.

bit 5-4 **Unimplemented:** Read as '0'

bit 3-0 **ANSC<3:0>**: Analog Select between Analog or Digital Function on pins RC<3:0>, respectively
1 = Analog input. Pin is assigned as analog input(1). Digital input buffer disabled.
0 = Digital I/O. Pin is assigned to port or digital special function.

Note 1: When setting a pin to an analog input, the corresponding TRIS bit must be set to Input mode in order to allow external control of the voltage on the pin.

REGISTER 11-16: WPUC: WEAK PULL-UP PORTC REGISTER

R/W-1/1	R/W-1/1	R/W-1/1	R/W-1/1	R/W-1/1	R/W-1/1	R/W-1/1	R/W-1/1
WPUC7	WPUC6	WPUC5	WPUC4	WPUC3	WPUC2	WPUC1	WPUC0
bit 7							bit 0

Legend:		
R = Readable bit	W = Writable bit	U = Unimplemented bit, read as '0'
u = Bit is unchanged	x = Bit is unknown	-n/n = Value at POR and BOR/Value at all other Resets
'1' = Bit is set	'0' = Bit is cleared	

bit 7-0 **WPUC<7:0>**: Weak Pull-Up Register bits(1, 2)
1 = Pull-up enabled
0 = Pull-up disabled

Note 1: Global $\overline{\text{WPUEN}}$ bit of the OPTION_REG register must be cleared for individual pull-ups to be enabled.
2: The weak pull-up device is automatically disabled if the pin is in configured as an output.

TABLE 11-8: SUMMARY OF REGISTERS ASSOCIATED WITH PORTC

Name	Bit 7	Bit 6	Bit 5	Bit 4	Bit 3	Bit 2	Bit 1	Bit 0	Register on Page
ANSELC	ANSC7	ANSC6	—	—	ANSC3	ANSC2	ANSC1	ANSC0	107
LATC	LATC7	LATC6	LATC5	LATC4	LATC3	LATC2	LATC1	LATC0	106
PORTC	RC7	RC6	RC5	RC4	RC3	RC2	RC1	RC0	106
TRISC	TRISC7	TRISC6	TRISC5	TRISC4	TRISC3	TRISC2	TRISC1	TRISC0	106
WPUC	WPUC7	WPUC6	WPUC5	WPUC4	WPUC3	WPUC2	WPUC1	WPUC0	107

Legend: x = unknown, u = unchanged, - = unimplemented locations read as '0'. Shaded cells are not used by PORTC.

12.0 INTERRUPT-ON-CHANGE

The PORTA and PORTB pins can be configured to operate as Interrupt-On-Change (IOC) pins. An interrupt can be generated by detecting a signal that has either a rising edge or a falling edge. Any individual port pin, or combination of port pins, can be configured to generate an interrupt. The interrupt-on-change module has the following features:

- Interrupt-on-Change enable (Master Switch)
- Individual pin configuration
- Rising and falling edge detection
- Individual pin interrupt flags

Figure 12-1 is a block diagram of the IOC module.

12.1 Enabling the Module

To allow individual port pins to generate an interrupt, the IOCIE bit of the INTCON register must be set. If the IOCIE bit is disabled, the edge detection on the pin will still occur, but an interrupt will not be generated.

12.2 Individual Pin Configuration

For each port pin, a rising edge detector and a falling edge detector are present. To enable a pin to detect a rising edge, the associated bit of the IOCxP register is set. To enable a pin to detect a falling edge, the associated bit of the IOCxN register is set.

A pin can be configured to detect rising and falling edges simultaneously by setting both associated bits of the IOCxP and IOCxN registers, respectively.

12.3 Interrupt Flags

The IOCAFx and IOCBFx bits located in the IOCAF and IOCBF registers, respectively, are status flags that correspond to the interrupt-on-change pins of the associated port. If an expected edge is detected on an appropriately enabled pin, then the status flag for that pin will be set, and an interrupt will be generated if the IOCIE bit is set. The IOCIF bit of the INTCON register reflects the status of all IOCAFx and IOCBFx bits.

12.4 Clearing Interrupt Flags

The individual status flags, (IOCAFx and IOCBFx bits), can be cleared by resetting them to zero. If another edge is detected during this clearing operation, the associated status flag will be set at the end of the sequence, regardless of the value actually being written.

In order to ensure that no detected edge is lost while clearing flags, only AND operations masking out known changed bits should be performed. The following sequence is an example of what should be performed.

EXAMPLE 12-1: CLEARING INTERRUPT FLAGS (PORTA EXAMPLE)

```
MOVLW  0xff
XORWF  IOCAF, W
ANDWF  IOCAF, F
```

12.5 Operation in Sleep

The interrupt-on-change interrupt sequence will wake the device from Sleep mode, if the IOCIE bit is set.

If an edge is detected while in Sleep mode, the IOCxF register will be updated prior to the first instruction executed out of Sleep.

 © 2011 Microchip Technology Inc.

FIGURE 12-1: INTERRUPT-ON-CHANGE BLOCK DIAGRAM (PORTB EXAMPLE)

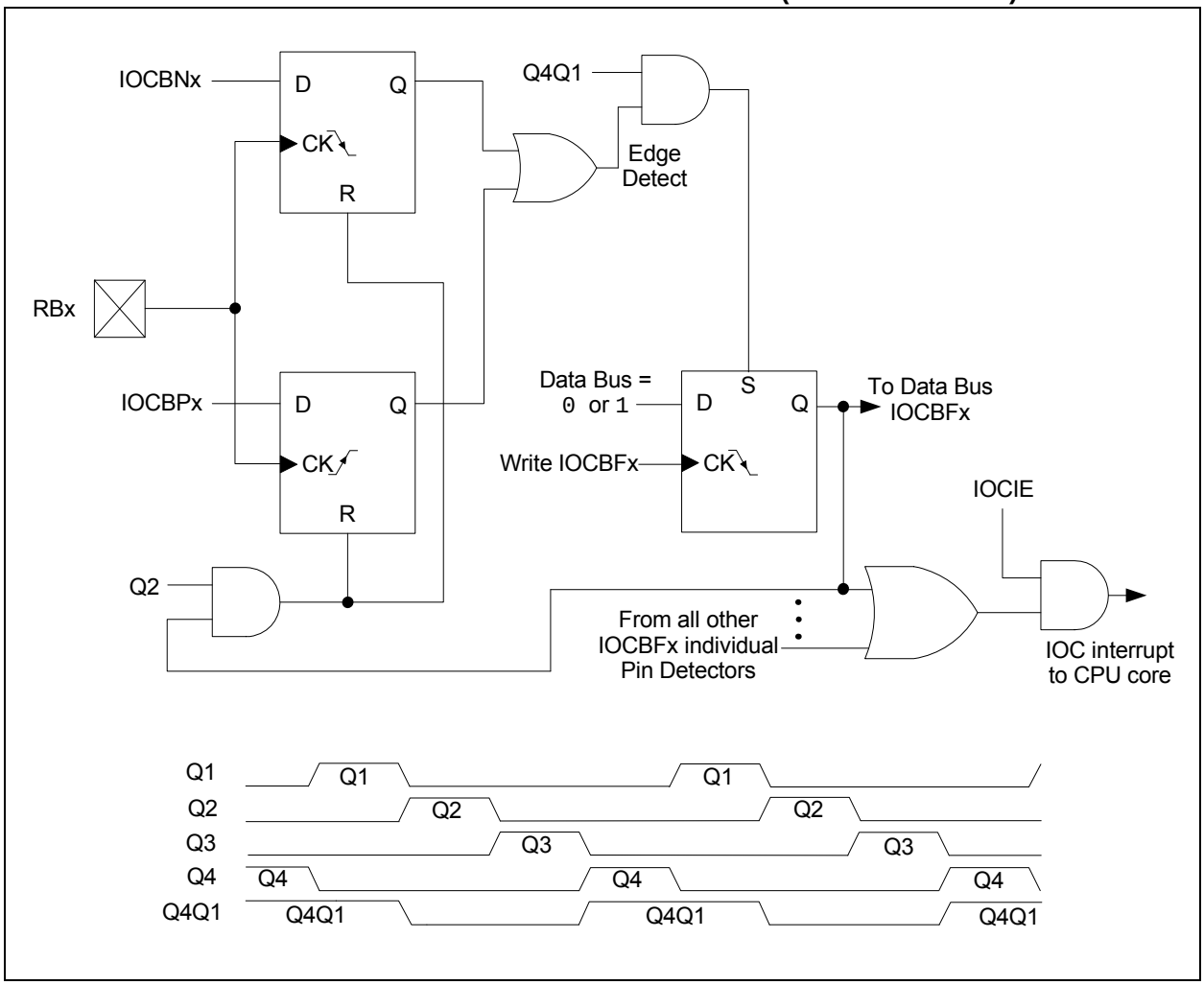

12.6 Interrupt-On-Change Registers

REGISTER 12-1: IOCAP: INTERRUPT-ON-CHANGE PORTA POSITIVE EDGE REGISTER

U-0	U-0	R/W-0/0	R/W-0/0	R/W-0/0	R/W-0/0	R/W-0/0	R/W-0/0
—	—	IOCAP5	IOCAP4	IOCAP3	IOCAP2	IOCAP1	IOCAP0
bit 7							bit 0

Legend:		
R = Readable bit	W = Writable bit	U = Unimplemented bit, read as '0'
u = Bit is unchanged	x = Bit is unknown	-n/n = Value at POR and BOR/Value at all other Resets
'1' = Bit is set	'0' = Bit is cleared	

bit 7-6 **Unimplemented:** Read as '0'

bit 5-0 **IOCAP<5:0>:** Interrupt-on-Change PORTA Positive Edge Enable bits
1 = Interrupt-on-Change enabled on the pin for a positive going edge. IOCAFx bit and IOCIF flag will be set upon detecting an edge.
0 = Interrupt-on-Change disabled for the associated pin.

REGISTER 12-2: IOCAN: INTERRUPT-ON-CHANGE PORTA NEGATIVE EDGE REGISTER

U-0	U-0	R/W-0/0	R/W-0/0	R/W-0/0	R/W-0/0	R/W-0/0	R/W-0/0
—	—	IOCAN5	IOCAN4	IOCAN3	IOCAN2	IOCAN1	IOCAN0
bit 7							bit 0

Legend:		
R = Readable bit	W = Writable bit	U = Unimplemented bit, read as '0'
u = Bit is unchanged	x = Bit is unknown	-n/n = Value at POR and BOR/Value at all other Resets
'1' = Bit is set	'0' = Bit is cleared	

bit 7-6 **Unimplemented:** Read as '0'

bit 5-0 **IOCAN<5:0>:** Interrupt-on-Change PORTA Negative Edge Enable bits
1 = Interrupt-on-Change enabled on the pin for a negative going edge. IOCAFx bit and IOCIF flag will be set upon detecting an edge.
0 = Interrupt-on-Change disabled for the associated pin.

REGISTER 12-3: IOCAF: INTERRUPT-ON-CHANGE PORTA FLAG REGISTER

U-0	U-0	R/W/HS-0/0	R/W/HS-0/0	R/W/HS-0/0	R/W/HS-0/0	R/W/HS-0/0	R/W/HS-0/0
—	—	IOCAF5	IOCAF4	IOCAF3	IOCAF2	IOCAF1	IOCAF0
bit 7							bit 0

Legend:		
R = Readable bit	W = Writable bit	U = Unimplemented bit, read as '0'
u = Bit is unchanged	x = Bit is unknown	-n/n = Value at POR and BOR/Value at all other Resets
'1' = Bit is set	'0' = Bit is cleared	HS - Bit is set in hardware

bit 7-6 **Unimplemented:** Read as '0'

bit 5-0 **IOCAF<5:0>:** Interrupt-on-Change PORTA Flag bits
1 = An enabled change was detected on the associated pin.
Set when IOCAPx = 1 and a rising edge was detected on RAx, or when IOCANx = 1 and a falling edge was detected on RAx.
0 = No change was detected, or the user cleared the detected change.

 © 2011 Microchip Technology Inc.

REGISTER 12-4: IOCBP: INTERRUPT-ON-CHANGE PORTB POSITIVE EDGE REGISTER

R/W-0/0	R/W-0/0	R/W-0/0	R/W-0/0	U-0	U-0	U-0	U-0
IOCBP7	IOCBP6	IOCBP5	IOCBP4	—	—	—	—
bit 7							bit 0

Legend:		
R = Readable bit	W = Writable bit	U = Unimplemented bit, read as '0'
u = Bit is unchanged	x = Bit is unknown	-n/n = Value at POR and BOR/Value at all other Resets
'1' = Bit is set	'0' = Bit is cleared	

bit 7-4 **IOCBP<7:4>:** Interrupt-on-Change PORTB Positive Edge Enable bits
1 = Interrupt-on-Change enabled on the pin for a positive going edge. IOCBFx bit and IOCIF flag will be set upon detecting an edge.
0 = Interrupt-on-Change disabled for the associated pin.

bit 3-0 **Unimplemented:** Read as '0'

REGISTER 12-5: IOCBN: INTERRUPT-ON-CHANGE PORTB NEGATIVE EDGE REGISTER

R/W-0/0	R/W-0/0	R/W-0/0	R/W-0/0	U-0	U-0	U-0	U-0
IOCBN7	IOCBN6	IOCBN5	IOCBN4	—	—	—	—
bit 7							bit 0

Legend:		
R = Readable bit	W = Writable bit	U = Unimplemented bit, read as '0'
u = Bit is unchanged	x = Bit is unknown	-n/n = Value at POR and BOR/Value at all other Resets
'1' = Bit is set	'0' = Bit is cleared	

bit 7-4 **IOCBN<7:4>:** Interrupt-on-Change PORTB Negative Edge Enable bits
1 = Interrupt-on-Change enabled on the pin for a negative going edge. IOCBFx bit and IOCIF flag will be set upon detecting an edge.
0 = Interrupt-on-Change disabled for the associated pin.

bit 5-0 **Unimplemented:** Read as '0'

REGISTER 12-6: IOCBF: INTERRUPT-ON-CHANGE PORTB FLAG REGISTER

R/W-0/0	R/W-0/0	R/W-0/0	R/W-0/0	U-0	U-0	U-0	U-0
IOCBF7	IOCBF6	IOCBF5	IOCBF4	—	—	—	—
bit 7							bit 0

Legend:		
R = Readable bit	W = Writable bit	U = Unimplemented bit, read as '0'
u = Bit is unchanged	x = Bit is unknown	-n/n = Value at POR and BOR/Value at all other Resets
'1' = Bit is set	'0' = Bit is cleared	HS - Bit is set in hardware

bit 7-4 **IOCBF<7:4>:** Interrupt-on-Change PORTB Flag bits
1 = An enabled change was detected on the associated pin.
Set when IOCBPx = 1 and a rising edge was detected on RAx, or when IOCANx = 1 and a falling edge was detected on RBx.
0 = No change was detected, or the user cleared the detected change.

bit 5-0 **Unimplemented:** Read as '0'

TABLE 12-1: SUMMARY OF REGISTERS ASSOCIATED WITH INTERRUPT-ON-CHANGE

Name	Bit 7	Bit 6	Bit 5	Bit 4	Bit 3	Bit 2	Bit 1	Bit 0	Register on Page
ANSELA	—	—	—	ANSA4	—	ANSA2	ANSA1	ANSA0	103
ANSELB	—	—	ANSB5	ANSB4	—	—	—	—	107
INTCON	GIE	PEIE	TMR0IE	INTE	IOCIE	TMR0IF	INTF	IOCIF	66
IOCAF	—	—	IOCAF5	IOCAF4	IOCAF3	IOCAF2	IOCAF1	IOCAF0	113
IOCAN	—	—	IOCAN5	IOCAN4	IOCAN3	IOCAN2	IOCAN1	IOCAN0	113
IOCAP	—	—	IOCAP5	IOCAP4	IOCAP3	IOCAP2	IOCAP1	IOCAP0	113
IOCBF	IOCBF7	IOCBF6	IOCBF5	IOCBF4	—	—	—	—	114
IOCBN	IOCBN7	IOCBN6	IOCBN5	IOCBN4	—	—	—	—	114
IOCBP	IOCBP7	IOCBP6	IOCBP5	IOCBP4	—	—	—	—	114
TRISA	—	—	TRISA5	TRISA4	—(1)	TRISA2	TRISA1	TRISA0	102
TRISB	TRISB7	TRISB6	TRISB5	TRISB4	—	—	—	—	106

Legend: — = unimplemented location, read as '0'. Shaded cells are not used by interrupt-on-change.
Note 1: Unimplemented, read as '1'.

© 2011 Microchip Technology Inc.

NOTES:

13.0 FIXED VOLTAGE REFERENCE (FVR)

The Fixed Voltage Reference, or FVR, is a stable voltage reference, independent of VDD, with 1.024V, 2.048V or 4.096V selectable output levels. The output of the FVR can be configured to supply a reference voltage to the following:

- ADC input channel

The FVR can be enabled by setting the FVREN bit of the FVRCON register.

13.1 Independent Gain Amplifier

The output of the FVR supplied to the ADC is routed through a programmable gain amplifier. The amplifier can be programmed for a gain of 1x, 2x or 4x, to produce the three possible voltage levels.

The ADFVR<1:0> bits of the FVRCON register are used to enable and configure the gain amplifier settings for the reference supplied to the ADC module. Reference **Section 15.0 "Analog-to-Digital Converter (ADC) Module"** for additional information.

13.2 FVR Stabilization Period

When the Fixed Voltage Reference module is enabled, it requires time for the reference and amplifier circuits to stabilize. Once the circuits stabilize and are ready for use, the FVRRDY bit of the FVRCON register will be set. See **Section 25.0 "Electrical Specifications"** for the minimum delay requirement.

FIGURE 13-1: VOLTAGE REFERENCE BLOCK DIAGRAM

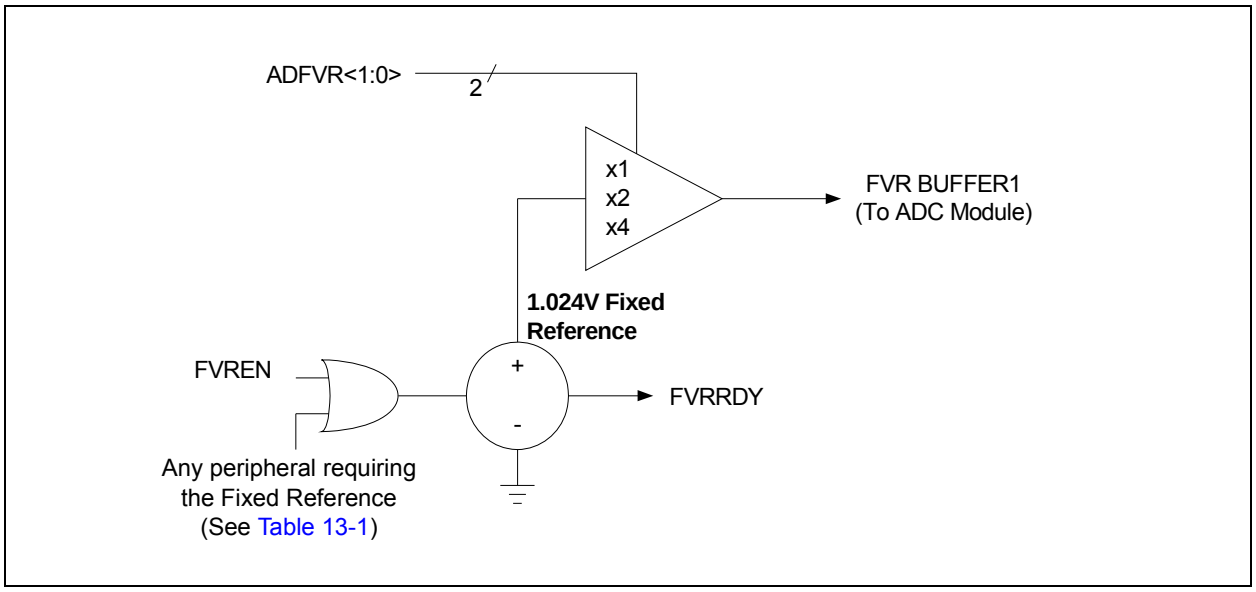

TABLE 13-1: PERIPHERALS REQUIRING THE FIXED VOLTAGE REFERENCE (FVR)

Peripheral	Conditions	Description
HFINTOSC	FOSC<1:0> = 00 and IRCF<3:0> = 000x	INTOSC is active and device is not in Sleep.
BOR	BOREN<1:0> = 11	BOR always enabled.
	BOREN<1:0> = 10 and BORFS = 1	BOR disabled in Sleep mode, BOR Fast Start enabled.
	BOREN<1:0> = 01 and BORFS = 1	BOR under software control, BOR Fast Start enabled.
LDO	All PIC16F1507 devices, when VREGPM = 1 and not in Sleep	The device runs off of the Low-Power Regulator when in Sleep mode.

 © 2011 Microchip Technology Inc.

13.3 FVR Control Registers

REGISTER 13-1: FVRCON: FIXED VOLTAGE REFERENCE CONTROL REGISTER

R/W-0/0	R-q/q	R/W-0/0	R/W-0/0	U-0	U-0	R/W-0/0	R/W-0/0
FVREN	FVRRDY(1)	TSEN	TSRNG	—	—	ADFVR<1:0>	
bit 7							bit 0

Legend:		
R = Readable bit	W = Writable bit	U = Unimplemented bit, read as '0'
u = Bit is unchanged	x = Bit is unknown	-n/n = Value at POR and BOR/Value at all other Resets
'1' = Bit is set	'0' = Bit is cleared	q = Value depends on condition

bit 7 **FVREN:** Fixed Voltage Reference Enable bit
1 = Fixed Voltage Reference is enabled
0 = Fixed Voltage Reference is disabled

bit 6 **FVRRDY:** Fixed Voltage Reference Ready Flag bit(1)
1 = Fixed Voltage Reference output is ready for use
0 = Fixed Voltage Reference output is not ready or not enabled

bit 5 **TSEN:** Temperature Indicator Enable bit
1 = Temperature Indicator is enabled
0 = Temperature Indicator is disabled

bit 4 **TSRNG:** Temperature Indicator Range Selection bit
1 = $V_{OUT} = V_{DD} - 4V_T$ (High Range)
0 = $V_{OUT} = V_{DD} - 2V_T$ (Low Range)

bit 3-2 **Unimplemented:** Read as '0'

bit 1-0 **ADFVR<1:0>:** ADC Fixed Voltage Reference Selection bit
11 = ADC Fixed Voltage Reference Peripheral output is 4x (4.096V)(2)
10 = ADC Fixed Voltage Reference Peripheral output is 2x (2.048V)(2)
01 = ADC Fixed Voltage Reference Peripheral output is 1x (1.024V)
00 = ADC Fixed Voltage Reference Peripheral output is off

Note 1: FVRRDY is always '1' for the PIC16F1507 devices.
2: Fixed Voltage Reference output cannot exceed V_{DD}.

TABLE 13-2: SUMMARY OF REGISTERS ASSOCIATED WITH THE FIXED VOLTAGE REFERENCE

Name	Bit 7	Bit 6	Bit 5	Bit 4	Bit 3	Bit 2	Bit 1	Bit 0	Register on page
FVRCON	FVREN	FVRRDY	TSEN	TSRNG	—	—	ADFVR<1:0>		118

Legend: Shaded cells are unused by the Fixed Voltage Reference module.

14.0 TEMPERATURE INDICATOR MODULE

This family of devices is equipped with a temperature circuit designed to measure the operating temperature of the silicon die. The circuit's range of operating temperature falls between -40°C and +85°C. The output is a voltage that is proportional to the device temperature. The output of the temperature indicator is internally connected to the device ADC.

The circuit may be used as a temperature threshold detector or a more accurate temperature indicator, depending on the level of calibration performed. A one-point calibration allows the circuit to indicate a temperature closely surrounding that point. A two-point calibration allows the circuit to sense the entire range of temperature more accurately. Reference Application Note AN1333, "*Use and Calibration of the Internal Temperature Indicator*" (DS01333) for more details regarding the calibration process.

14.1 Circuit Operation

Figure 14-1 shows a simplified block diagram of the temperature circuit. The proportional voltage output is achieved by measuring the forward voltage drop across multiple silicon junctions.

Equation 14-1 describes the output characteristics of the temperature indicator.

EQUATION 14-1: VOUT RANGES

High Range: $V_{OUT} = V_{DD} - 4V_T$

Low Range: $V_{OUT} = V_{DD} - 2V_T$

The temperature sense circuit is integrated with the Fixed Voltage Reference (FVR) module. See **Section 13.0 "Fixed Voltage Reference (FVR)"** for more information.

The circuit is enabled by setting the TSEN bit of the FVRCON register. When disabled, the circuit draws no current.

The circuit operates in either high or low range. The high range, selected by setting the TSRNG bit of the FVRCON register, provides a wider output voltage. This provides more resolution over the temperature range, but may be less consistent from part to part. This range requires a higher bias voltage to operate and thus, a higher VDD is needed.

The low range is selected by clearing the TSRNG bit of the FVRCON register. The low range generates a lower voltage drop and thus, a lower bias voltage is needed to operate the circuit. The low range is provided for low voltage operation.

FIGURE 14-1: TEMPERATURE CIRCUIT DIAGRAM

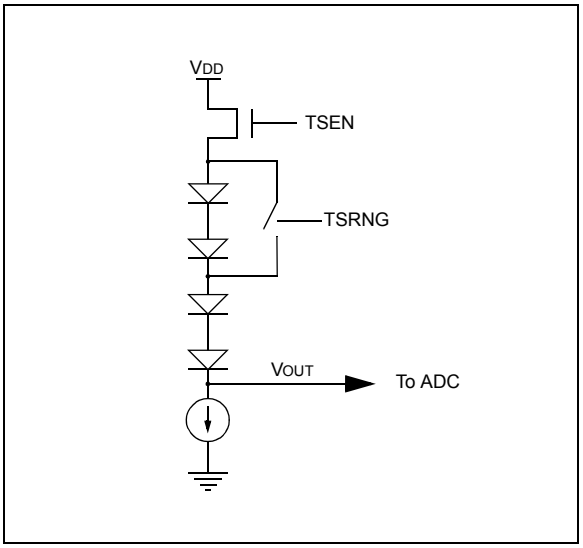

14.2 Minimum Operating VDD

When the temperature circuit is operated in low range, the device may be operated at any operating voltage that is within specifications.

When the temperature circuit is operated in high range, the device operating voltage, VDD, must be high enough to ensure that the temperature circuit is correctly biased.

Table 14-1 shows the recommended minimum VDD vs. range setting.

TABLE 14-1: RECOMMENDED VDD VS. RANGE

Min. VDD, TSRNG = 1	Min. VDD, TSRNG = 0
3.6V	1.8V

14.3 Temperature Output

The output of the circuit is measured using the internal Analog-to-Digital Converter. A channel is reserved for the temperature circuit output. Refer to **Section 15.0 "Analog-to-Digital Converter (ADC) Module"** for detailed information.

14.4 ADC Acquisition Time

To ensure accurate temperature measurements, the user must wait at least 200 µs after the ADC input multiplexer is connected to the temperature indicator output before the conversion is performed. In addition, the user must wait 200 µs between sequential conversions of the temperature indicator output.

 © 2011 Microchip Technology Inc.

TABLE 14-2: SUMMARY OF REGISTERS ASSOCIATED WITH THE TEMPERATURE INDICATOR

Name	Bit 7	Bit 6	Bit 5	Bit 4	Bit 3	Bit 2	Bit 1	Bit 0	Register on page
FVRCON	FVREN	FVRRDY	TSEN	TSRNG	—	—	ADFVR<1:0>		118

Legend: Shaded cells are unused by the temperature indicator module.

15.0 ANALOG-TO-DIGITAL CONVERTER (ADC) MODULE

The Analog-to-Digital Converter (ADC) allows conversion of an analog input signal to a 10-bit binary representation of that signal. This device uses analog inputs, which are multiplexed into a single sample and hold circuit. The output of the sample and hold is connected to the input of the converter. The converter generates a 10-bit binary result via successive approximation and stores the conversion result into the ADC result registers (ADRESH:ADRESL register pair). Figure 15-1 shows the block diagram of the ADC.

The ADC voltage reference is software selectable to be either internally generated or externally supplied.

The ADC can generate an interrupt upon completion of a conversion. This interrupt can be used to wake-up the device from Sleep.

FIGURE 15-1: ADC BLOCK DIAGRAM

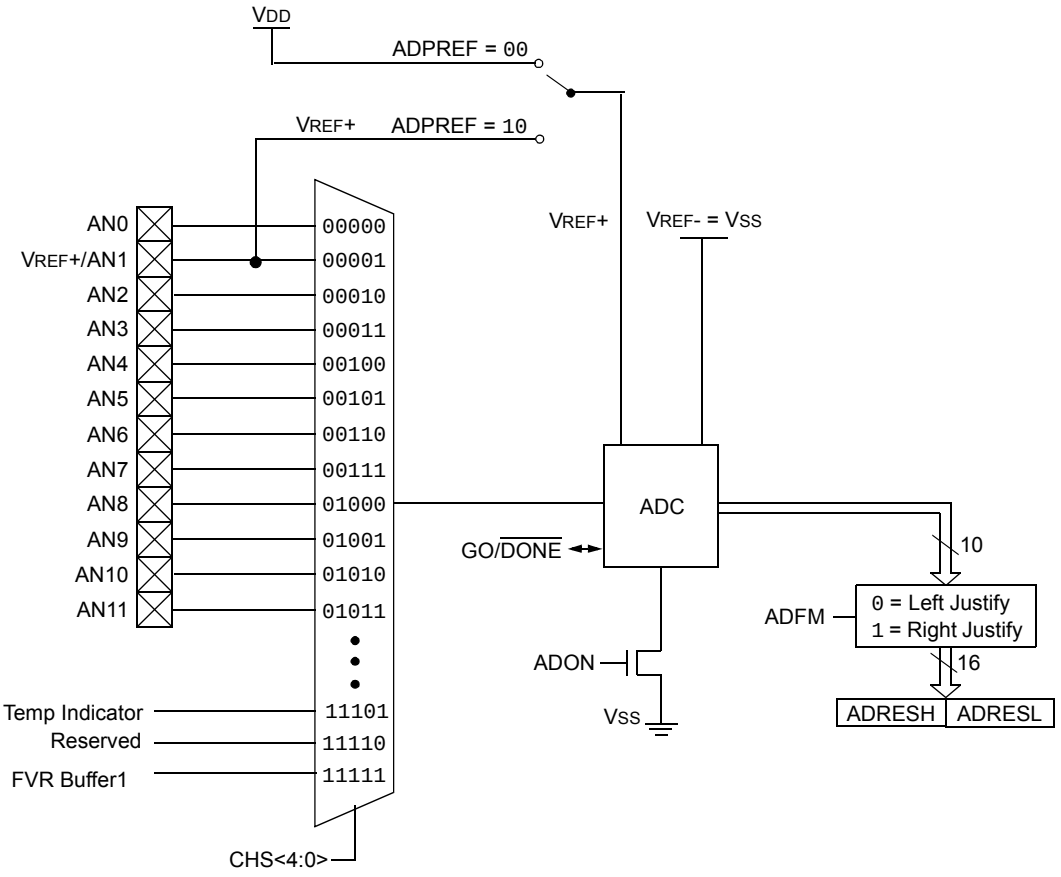

Note 1: When ADON = 0, all multiplexer inputs are disconnected.

 © 2011 Microchip Technology Inc.

15.1 ADC Configuration

When configuring and using the ADC the following functions must be considered:

- Port configuration
- Channel selection
- ADC voltage reference selection
- ADC conversion clock source
- Interrupt control
- Result formatting

15.1.1 PORT CONFIGURATION

The ADC can be used to convert both analog and digital signals. When converting analog signals, the I/O pin should be configured for analog by setting the associated TRIS and ANSEL bits. Refer to **Section 11.0 "I/O Ports"** for more information.

Note:	Analog voltages on any pin that is defined as a digital input may cause the input buffer to conduct excess current.

15.1.2 CHANNEL SELECTION

There are 14 channel selections available:

- AN<11:0> pins
- Temperature Indicator
- FVR (Fixed Voltage Reference) Output

Refer to **Section 13.0 "Fixed Voltage Reference (FVR)"** and **Section 14.0 "Temperature Indicator Module"** for more information on these channel selections.

The CHS bits of the ADCON0 register determine which channel is connected to the sample and hold circuit.

When changing channels, a delay is required before starting the next conversion. Refer to **Section 15.2 "ADC Operation"** for more information.

15.1.3 ADC VOLTAGE REFERENCE

The ADPREF bits of the ADCON1 register provides control of the positive voltage reference. The positive voltage reference can be:

- V_{REF}+ pin
- V_{DD}
- FVR 2.048V
- FVR 4.096V (Not available on LF devices)

See **Section 13.0 "Fixed Voltage Reference (FVR)"** for more details on the Fixed Voltage Reference.

15.1.4 CONVERSION CLOCK

The source of the conversion clock is software selectable via the ADCS bits of the ADCON1 register. There are seven possible clock options:

- F_{OSC}/2
- F_{OSC}/4
- F_{OSC}/8
- F_{OSC}/16
- F_{OSC}/32
- F_{OSC}/64
- F_{RC} (dedicated internal oscillator)

The time to complete one bit conversion is defined as T_{AD}. One full 10-bit conversion requires 11.5 T_{AD} periods as shown in Figure 15-2.

For correct conversion, the appropriate T_{AD} specification must be met. Refer to the A/D conversion requirements in **Section 25.0 "Electrical Specifications"** for more information. Table 15-1 gives examples of appropriate ADC clock selections.

Note:	Unless using the F_{RC}, any changes in the system clock frequency will change the ADC clock frequency, which may adversely affect the ADC result.

TABLE 15-1: ADC CLOCK PERIOD (T_{AD}) VS. DEVICE OPERATING FREQUENCIES

ADC Clock Period (T_{AD})		Device Frequency (F_{OSC})				
ADC Clock Source	ADCS<2:0>	20 MHz	16 MHz	8 MHz	4 MHz	1 MHz
Fosc/2	000	100 ns(2)	125 ns(2)	250 ns(2)	500 ns(2)	2.0 μs
Fosc/4	100	200 ns(2)	250 ns(2)	500 ns(2)	1.0 μs	4.0 μs
Fosc/8	001	400 ns(2)	0.5 μs(2)	1.0 μs	2.0 μs	8.0 μs(3)
Fosc/16	101	800 ns	1.0 μs	2.0 μs	4.0 μs	16.0 μs(3)
Fosc/32	010	1.6 μs	2.0 μs	4.0 μs	8.0 μs(3)	32.0 μs(3)
Fosc/64	110	3.2 μs	4.0 μs	8.0 μs(3)	16.0 μs(3)	64.0 μs(3)
FRC	x11	1.0-6.0 μs(1,4)	1.0-6.0 μs(1,4)	1.0-6.0 μs(1,4)	1.0-6.0 μs(1,4)	1.0-6.0 μs(1,4)

Legend: Shaded cells are outside of recommended range.

Note 1: The FRC source has a typical T_{AD} time of 1.6 μs for V_{DD}.

2: These values violate the minimum required T_{AD} time.

3: For faster conversion times, the selection of another clock source is recommended.

4: The ADC clock period (T_{AD}) and total ADC conversion time can be minimized when the ADC clock is derived from the system clock F_{OSC}. However, the FRC clock source must be used when conversions are to be performed with the device in Sleep mode.

FIGURE 15-2: ANALOG-TO-DIGITAL CONVERSION T_{AD} CYCLES

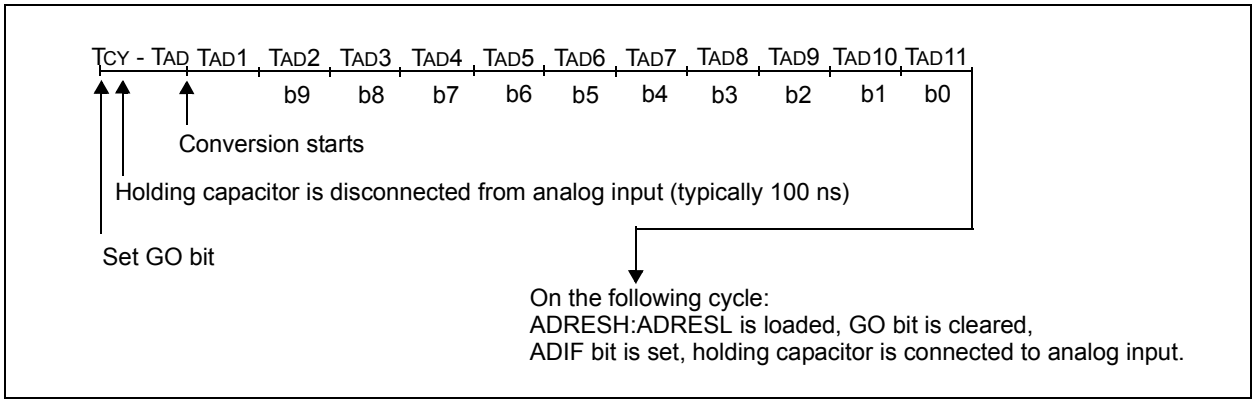

 © 2011 Microchip Technology Inc.

15.1.5 INTERRUPTS

The ADC module allows for the ability to generate an interrupt upon completion of an Analog-to-Digital conversion. The ADC Interrupt Flag is the ADIF bit in the PIR1 register. The ADC Interrupt Enable is the ADIE bit in the PIE1 register. The ADIF bit must be cleared in software.

Note 1:	The ADIF bit is set at the completion of every conversion, regardless of whether or not the ADC interrupt is enabled.
2:	The ADC operates during Sleep only when the FRC oscillator is selected.

This interrupt can be generated while the device is operating or while in Sleep. If the device is in Sleep, the interrupt will wake-up the device. Upon waking from Sleep, the next instruction following the SLEEP instruction is always executed. If the user is attempting to wake-up from Sleep and resume in-line code execution, the GIE and PEIE bits of the INTCON register must be disabled. If the GIE and PEIE bits of the INTCON register are enabled, execution will switch to the Interrupt Service Routine.

15.1.6 RESULT FORMATTING

The 10-bit A/D conversion result can be supplied in two formats, left justified or right justified. The ADFM bit of the ADCON1 register controls the output format.

Figure 15-3 shows the two output formats.

FIGURE 15-3: 10-BIT A/D CONVERSION RESULT FORMAT

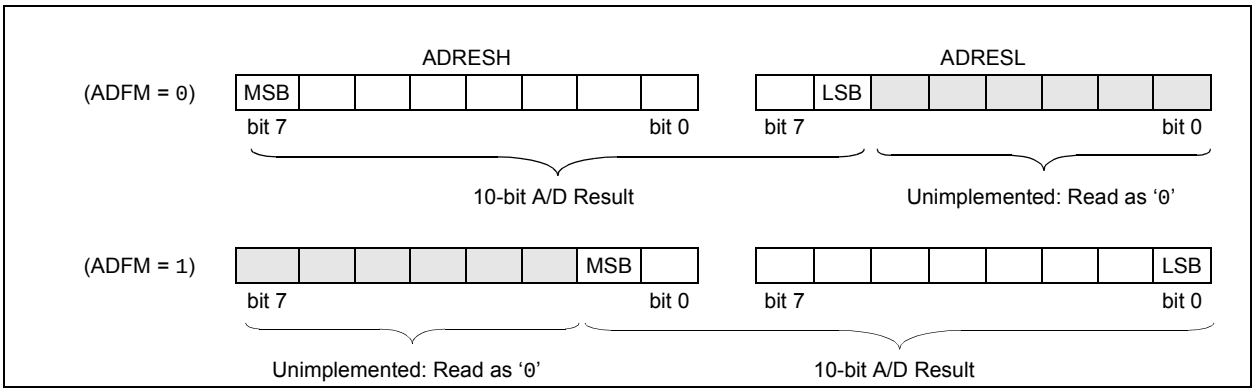

15.2 ADC Operation

15.2.1 STARTING A CONVERSION

To enable the ADC module, the ADON bit of the ADCON0 register must be set to a '1'. Setting the GO/$\overline{\text{DONE}}$ bit of the ADCON0 register to a '1' will start the Analog-to-Digital conversion.

Note:	The GO/$\overline{\text{DONE}}$ bit should not be set in the same instruction that turns on the ADC. Refer to **Section 15.2.6 "A/D Conversion Procedure"**.

15.2.2 COMPLETION OF A CONVERSION

When the conversion is complete, the ADC module will:

- Clear the GO/$\overline{\text{DONE}}$ bit
- Set the ADIF Interrupt Flag bit
- Update the ADRESH and ADRESL registers with new conversion result

15.2.3 TERMINATING A CONVERSION

If a conversion must be terminated before completion, the GO/$\overline{\text{DONE}}$ bit can be cleared in software. The ADRESH and ADRESL registers will be updated with the partially complete Analog-to-Digital conversion sample. Incomplete bits will match the last bit converted.

Note:	A device Reset forces all registers to their Reset state. Thus, the ADC module is turned off and any pending conversion is terminated.

15.2.4 ADC OPERATION DURING SLEEP

The ADC module can operate during Sleep. This requires the ADC clock source to be set to the FRC option. When the FRC clock source is selected, the ADC waits one additional instruction before starting the conversion. This allows the SLEEP instruction to be executed, which can reduce system noise during the conversion. If the ADC interrupt is enabled, the device will wake-up from Sleep when the conversion completes. If the ADC interrupt is disabled, the ADC module is turned off after the conversion completes, although the ADON bit remains set.

When the ADC clock source is something other than FRC, a SLEEP instruction causes the present conversion to be aborted and the ADC module is turned off, although the ADON bit remains set.

15.2.5 AUTO-CONVERSION TRIGGER

The auto-conversion trigger allows periodic ADC measurements without software intervention. When a rising edge of the selected source occurs, the GO/$\overline{\text{DONE}}$ bit is set by hardware.

The auto-conversion trigger source is selected with the TRIGSEL<3:0> bits of the ADCON2 register.

Using the auto-conversion trigger does not assure proper ADC timing. It is the user's responsibility to ensure that the ADC timing requirements are met.

Auto-Conversion sources are:

- TMR0
- TMR1
- TMR2
- CLC1
- CLC2

 © 2011 Microchip Technology Inc.

15.2.6 A/D CONVERSION PROCEDURE

This is an example procedure for using the ADC to perform an Analog-to-Digital conversion:

1. Configure Port:
   - Disable pin output driver (Refer to the TRIS register)
   - Configure pin as analog (Refer to the ANSEL register)
2. Configure the ADC module:
   - Select ADC conversion clock
   - Configure voltage reference
   - Select ADC input channel
   - Turn on ADC module
3. Configure ADC interrupt (optional):
   - Clear ADC interrupt flag
   - Enable ADC interrupt
   - Enable peripheral interrupt
   - Enable global interrupt**(1)**
4. Wait the required acquisition time**(2)**.
5. Start conversion by setting the GO/$\overline{\text{DONE}}$ bit.
6. Wait for ADC conversion to complete by one of the following:
   - Polling the GO/$\overline{\text{DONE}}$ bit
   - Waiting for the ADC interrupt (interrupts enabled)
7. Read ADC Result.
8. Clear the ADC interrupt flag (required if interrupt is enabled).

Note 1: The global interrupt can be disabled if the user is attempting to wake-up from Sleep and resume in-line code execution.

2: Refer to **Section 15.3 "A/D Acquisition Requirements"**.

EXAMPLE 15-1: A/D CONVERSION

```
;This code block configures the ADC
;for polling, Vdd and Vss references, Frc
;clock and AN0 input.
;
;Conversion start & polling for completion
; are included.
;
BANKSEL   ADCON1       ;
MOVLW     B'11110000'  ;Right justify, Frc
                       ;clock
MOVWF     ADCON1       ;Vdd and Vss Vref+
BANKSEL   TRISA        ;
BSF       TRISA,0      ;Set RA0 to input
BANKSEL   ANSEL        ;
BSF       ANSEL,0      ;Set RA0 to analog
BANKSEL   ADCON0       ;
MOVLW     B'00000001'  ;Select channel AN0
MOVWF     ADCON0       ;Turn ADC On
CALL      SampleTime   ;Acquisiton delay
BSF       ADCON0,ADGO  ;Start conversion
BTFSC     ADCON0,ADGO  ;Is conversion done?
GOTO      $-1          ;No, test again
BANKSEL   ADRESH       ;
MOVF      ADRESH,W     ;Read upper 2 bits
MOVWF     RESULTHI     ;store in GPR space
BANKSEL   ADRESL       ;
MOVF      ADRESL,W     ;Read lower 8 bits
MOVWF     RESULTLO     ;Store in GPR space
```

15.2.7 ADC REGISTER DEFINITIONS

The following registers are used to control the operation of the ADC.

REGISTER 15-1: ADCON0: A/D CONTROL REGISTER 0

U-0	R/W-0/0	R/W-0/0	R/W-0/0	R/W-0/0	R/W-0/0	R/W-0/0	R/W-0/0
—	CHS<4:0>					GO/$\overline{\text{DONE}}$	ADON
bit 7							bit 0

Legend:		
R = Readable bit	W = Writable bit	U = Unimplemented bit, read as '0'
u = Bit is unchanged	x = Bit is unknown	-n/n = Value at POR and BOR/Value at all other Resets
'1' = Bit is set	'0' = Bit is cleared	

bit 7 **Unimplemented:** Read as '0'

bit 6-2 **CHS<4:0>:** Analog Channel Select bits

00000 = AN0
00001 = AN1
00010 = AN2
00011 = AN3
00100 = AN4
00101 = AN5
00110 = AN6
00111 = AN7
01000 = AN8
01001 = AN9
01010 = AN10
01011 = AN11
01100 = Reserved. No channel connected.
•
•
•
11101 = Temperature Indicator(2)
11110 = Reserved. No channel connected
11111 = FVR (Fixed Voltage Reference) Buffer 1 Output(1)

bit 1 **GO/$\overline{\text{DONE}}$:** A/D Conversion Status bit

1 = A/D conversion cycle in progress. Setting this bit starts an A/D conversion cycle.
This bit is automatically cleared by hardware when the A/D conversion has completed.
0 = A/D conversion completed/not in progress

bit 0 **ADON:** ADC Enable bit

1 = ADC is enabled
0 = ADC is disabled and consumes no operating current

Note 1: See **Section 13.0 "Fixed Voltage Reference (FVR)"** for more information.
2: See **Section 14.0 "Temperature Indicator Module"** for more information.

 © 2011 Microchip Technology Inc.

REGISTER 15-2: ADCON1: A/D CONTROL REGISTER 1

R/W-0/0	R/W-0/0	R/W-0/0	R/W-0/0	U-0	U-0	R/W-0/0	R/W-0/0
ADFM	ADCS<2:0>			—	—	ADPREF<1:0>	
bit 7							bit 0

Legend:		
R = Readable bit	W = Writable bit	U = Unimplemented bit, read as '0'
u = Bit is unchanged	x = Bit is unknown	-n/n = Value at POR and BOR/Value at all other Resets
'1' = Bit is set	'0' = Bit is cleared	

bit 7 **ADFM:** A/D Result Format Select bit
1 = Right justified. Six Most Significant bits of ADRESH are set to '0' when the conversion result is loaded.
0 = Left justified. Six Least Significant bits of ADRESL are set to '0' when the conversion result is loaded.

bit 6-4 **ADCS<2:0>:** A/D Conversion Clock Select bits
000 = FOSC/2
001 = FOSC/8
010 = FOSC/32
011 = FRC (clock supplied from a dedicated RC oscillator)
100 = FOSC/4
101 = FOSC/16
110 = FOSC/64
111 = FRC (clock supplied from a dedicated RC oscillator)

bit 3-2 **Unimplemented**: Read as '0'

bit 1-0 **ADPREF<1:0>:** A/D Positive Voltage Reference Configuration bits
00 = VREF+ is connected to VDD
01 = Reserved
10 = VREF+ is connected to external VREF+ pin(1)
11 = Reserved

Note 1: When selecting the VREF+ pin as the source of the positive reference, be aware that a minimum voltage specification exists. See **Section 25.0 "Electrical Specifications"** for details.

REGISTER 15-3: ADCON2: A/D CONTROL REGISTER 2

R/W-0/0	R/W-0/0	R/W-0/0	R/W-0/0	U-0	U-0	U-0	U-0
TRIGSEL<3:0>				—	—	—	—
bit 7							bit 0

Legend:		
R = Readable bit	W = Writable bit	U = Unimplemented bit, read as '0'
u = Bit is unchanged	x = Bit is unknown	-n/n = Value at POR and BOR/Value at all other Resets
'1' = Bit is set	'0' = Bit is cleared	

bit 7-4 **TRIGSEL<3:0>:** Auto-conversion Trigger Selection bits(1)

0000 = No auto-conversion trigger selected
0001 = Reserved
0010 = Reserved
0011 = TMR0 Overflow(2)
0100 = TMR1 Overflow(2)
0101 = TMR2 Match to PR2(2)
0110 = Reserved
0111 = Reserved
1000 = CLC1
1001 = CLC2
1010 = Reserved
1011 = Reserved
1100 = Reserved
1101 = Reserved
1110 = Reserved
1111 = Reserved

bit 3-0 **Unimplemented:** Read as '0'

Note 1: This is a rising edge sensitive input for all sources.
2: Signal also sets its corresponding interrupt flag.

 © 2011 Microchip Technology Inc.

REGISTER 15-4: ADRESH: ADC RESULT REGISTER HIGH (ADRESH) ADFM = 0

R/W-x/u	R/W-x/u	R/W-x/u	R/W-x/u	R/W-x/u	R/W-x/u	R/W-x/u	R/W-x/u
ADRES<9:2>							
bit 7							bit 0

Legend:		
R = Readable bit	W = Writable bit	U = Unimplemented bit, read as ‘0’
u = Bit is unchanged	x = Bit is unknown	-n/n = Value at POR and BOR/Value at all other Resets
‘1’ = Bit is set	‘0’ = Bit is cleared	

bit 7-0 **ADRES<9:2>**: ADC Result Register bits
Upper 8 bits of 10-bit conversion result

REGISTER 15-5: ADRESL: ADC RESULT REGISTER LOW (ADRESL) ADFM = 0

R/W-x/u	R/W-x/u	R/W-x/u	R/W-x/u	R/W-x/u	R/W-x/u	R/W-x/u	R/W-x/u
ADRES<1:0>		—	—	—	—	—	—
bit 7							bit 0

Legend:		
R = Readable bit	W = Writable bit	U = Unimplemented bit, read as ‘0’
u = Bit is unchanged	x = Bit is unknown	-n/n = Value at POR and BOR/Value at all other Resets
‘1’ = Bit is set	‘0’ = Bit is cleared	

bit 7-6 **ADRES<1:0>**: ADC Result Register bits
Lower 2 bits of 10-bit conversion result

bit 5-0 **Reserved**: Do not use.

REGISTER 15-6: ADRESH: ADC RESULT REGISTER HIGH (ADRESH) ADFM = 1

R/W-x/u	R/W-x/u	R/W-x/u	R/W-x/u	R/W-x/u	R/W-x/u	R/W-x/u	R/W-x/u
—	—	—	—	—	—	ADRES<9:8>	
bit 7							bit 0

Legend:		
R = Readable bit	W = Writable bit	U = Unimplemented bit, read as ‘0’
u = Bit is unchanged	x = Bit is unknown	-n/n = Value at POR and BOR/Value at all other Resets
‘1’ = Bit is set	‘0’ = Bit is cleared	

bit 7-2 **Reserved**: Do not use.

bit 1-0 **ADRES<9:8>**: ADC Result Register bits
Upper 2 bits of 10-bit conversion result

REGISTER 15-7: ADRESL: ADC RESULT REGISTER LOW (ADRESL) ADFM = 1

R/W-x/u	R/W-x/u	R/W-x/u	R/W-x/u	R/W-x/u	R/W-x/u	R/W-x/u	R/W-x/u
ADRES<7:0>							
bit 7							bit 0

Legend:		
R = Readable bit	W = Writable bit	U = Unimplemented bit, read as ‘0’
u = Bit is unchanged	x = Bit is unknown	-n/n = Value at POR and BOR/Value at all other Resets
‘1’ = Bit is set	‘0’ = Bit is cleared	

bit 7-0 **ADRES<7:0>**: ADC Result Register bits
Lower 8 bits of 10-bit conversion result

 © 2011 Microchip Technology Inc.

15.3 A/D Acquisition Requirements

For the ADC to meet its specified accuracy, the charge holding capacitor (CHOLD) must be allowed to fully charge to the input channel voltage level. The Analog Input model is shown in Figure 15-4. The source impedance (RS) and the internal sampling switch (RSS) impedance directly affect the time required to charge the capacitor CHOLD. The sampling switch (RSS) impedance varies over the device voltage (VDD), refer to Figure 15-4. **The maximum recommended impedance for analog sources is 10 kΩ.** As the source impedance is decreased, the acquisition time may be decreased. After the analog input channel is selected (or changed), an A/D acquisition must be done before the conversion can be started. To calculate the minimum acquisition time, Equation 15-1 may be used. This equation assumes that 1/2 LSb error is used (1,024 steps for the ADC). The 1/2 LSb error is the maximum error allowed for the ADC to meet its specified resolution.

EQUATION 15-1: ACQUISITION TIME EXAMPLE

Assumptions: $Temperature = 50°C$ *and external impedance of* $10k\Omega$ *5.0V* V_{DD}

$$\begin{aligned} T_{ACQ} &= \text{Amplifier Settling Time} + \text{Hold Capacitor Charging Time} + \text{Temperature Coefficient} \\ &= T_{AMP} + T_C + T_{COFF} \\ &= 2\mu s + T_C + [(Temperature - 25°C)(0.05\mu s/°C)] \end{aligned}$$

The value for T_C *can be approximated with the following equations:*

$$V_{APPLIED}\left(1 - \frac{1}{(2^{n+1}) - 1}\right) = V_{CHOLD} \quad ;[1]\ V_{CHOLD}\ \text{charged to within 1/2 lsb}$$

$$V_{APPLIED}\left(1 - e^{\frac{-T_C}{RC}}\right) = V_{CHOLD} \quad ;[2]\ V_{CHOLD}\ \text{charge response to}\ V_{APPLIED}$$

$$V_{APPLIED}\left(1 - e^{\frac{-T_C}{RC}}\right) = V_{APPLIED}\left(1 - \frac{1}{(2^{n+1}) - 1}\right) \quad ;\text{combining [1] and [2]}$$

Note: Where n = number of bits of the ADC.

Solving for T_C*:*

$$\begin{aligned} T_C &= -C_{HOLD}(R_{IC} + R_{SS} + R_S)\ ln(1/2047) \\ &= -12.5pF(1k\Omega + 7k\Omega + 10k\Omega)\ ln(0.0004885) \\ &= 1.12\mu s \end{aligned}$$

Therefore:

$$\begin{aligned} T_{ACQ} &= 5\mu s + 1.12\mu s + [(50°C - 25°C)(0.05\mu s/°C)] \\ &= 7.37\mu s \end{aligned}$$

Note 1: The reference voltage (VREF+) has no effect on the equation, since it cancels itself out.

2: The charge holding capacitor (CHOLD) is not discharged after each conversion.

3: The maximum recommended impedance for analog sources is 10 kΩ. This is required to meet the pin leakage specification.

FIGURE 15-4: ANALOG INPUT MODEL

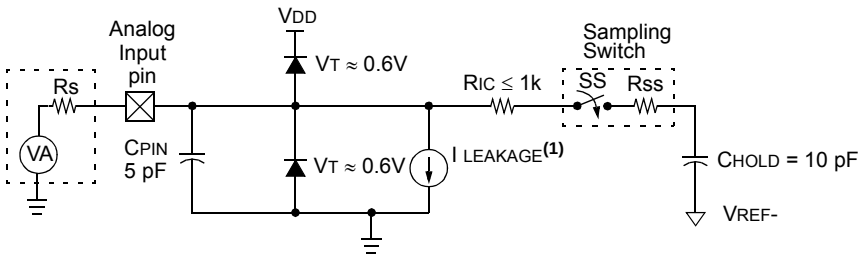

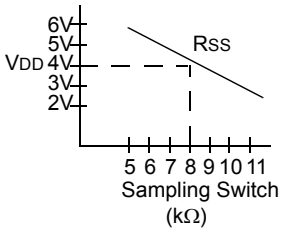

Legend:

CHOLD	=	Sample/Hold Capacitance
CPIN	=	Input Capacitance
I LEAKAGE	=	Leakage current at the pin due to various junctions
RIC	=	Interconnect Resistance
RSS	=	Resistance of Sampling Switch
SS	=	Sampling Switch
VT	=	Threshold Voltage

Note 1: Refer to **Section 25.0 "Electrical Specifications"**.

FIGURE 15-5: ADC TRANSFER FUNCTION

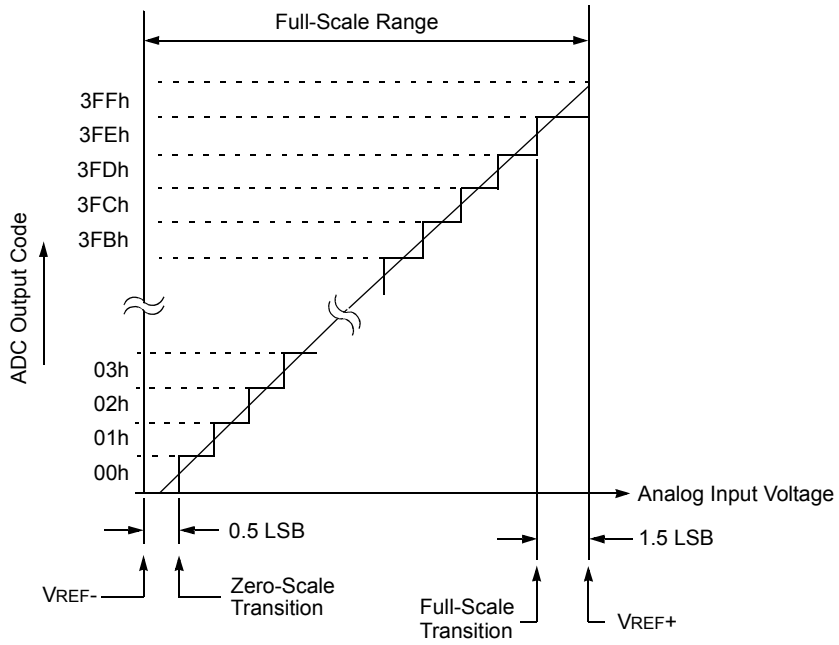

 © 2011 Microchip Technology Inc.

TABLE 15-2: SUMMARY OF REGISTERS ASSOCIATED WITH ADC

Name	Bit 7	Bit 6	Bit 5	Bit 4	Bit 3	Bit 2	Bit 1	Bit 0	Register on Page
ADCON0	—	CHS<4:0>					GO/$\overline{\text{DONE}}$	ADON	127
ADCON1	ADFM	ADCS<2:0>			—	—	ADPREF<1:0>		128
ADCON2	TRIGSEL<3:0>				—	—	—	—	129
ADRESH	A/D Result Register High								130, 131
ADRESL	A/D Result Register Low								130, 131
ANSELA	—	—	—	ANSA4	—	ANSA2	ANSA1	ANSA0	103
ANSELB	—	—	ANSB5	ANSB4	—	—	—	—	107
ANSELC	ANSC7	ANSC6	—	—	ANSC3	ANSC2	ANSC1	ANSC0	110
INTCON	GIE	PEIE	TMR0IE	INTE	IOCIE	TMR0IF	INTF	IOCIF	66
PIE1	TMR1GIE	ADIE	—	—	—	—	TMR2IE	TMR1IE	67
PIR1	TMR1GIF	ADIF	—	—	—	—	TMR2IF	TMR1IF	70
TRISA	—	—	TRISA5	TRISA4	—(1)	TRISA2	TRISA1	TRISA0	102
TRISB	TRISB7	TRISB6	TRISB5	TRISB4	—	—	—	—	106
TRISC	TRISC7	TRISC6	TRISC5	TRISC4	TRISC3	TRISC2	TRISC1	TRISC0	109
FVRCON	FVREN	FVRRDY	TSEN	TSRNG	—	—	ADFVR<1:0>		118

Legend: x = unknown, u = unchanged, – = unimplemented read as '0', q = value depends on condition. Shaded cells are not used for ADC module.

Note 1: Unimplemented, read as '1'.

16.0 TIMER0 MODULE

The Timer0 module is an 8-bit timer/counter with the following features:

- 8-bit timer/counter register (TMR0)
- 8-bit prescaler (independent of Watchdog Timer)
- Programmable internal or external clock source
- Programmable external clock edge selection
- Interrupt on overflow
- TMR0 can be used to gate Timer1

Figure 16-1 is a block diagram of the Timer0 module.

16.1 Timer0 Operation

The Timer0 module can be used as either an 8-bit timer or an 8-bit counter.

16.1.1 8-BIT TIMER MODE

The Timer0 module will increment every instruction cycle, if used without a prescaler. 8-Bit Timer mode is selected by clearing the TMR0CS bit of the OPTION_REG register.

When TMR0 is written, the increment is inhibited for two instruction cycles immediately following the write.

Note:	The value written to the TMR0 register can be adjusted, in order to account for the two instruction cycle delay when TMR0 is written.

16.1.2 8-BIT COUNTER MODE

In 8-Bit Counter mode, the Timer0 module will increment on every rising or falling edge of the T0CKI pin.

8-Bit Counter mode using the T0CKI pin is selected by setting the TMR0CS bit in the OPTION_REG register to '1'.

The rising or falling transition of the incrementing edge for either input source is determined by the TMR0SE bit in the OPTION_REG register.

FIGURE 16-1: BLOCK DIAGRAM OF THE TIMER0

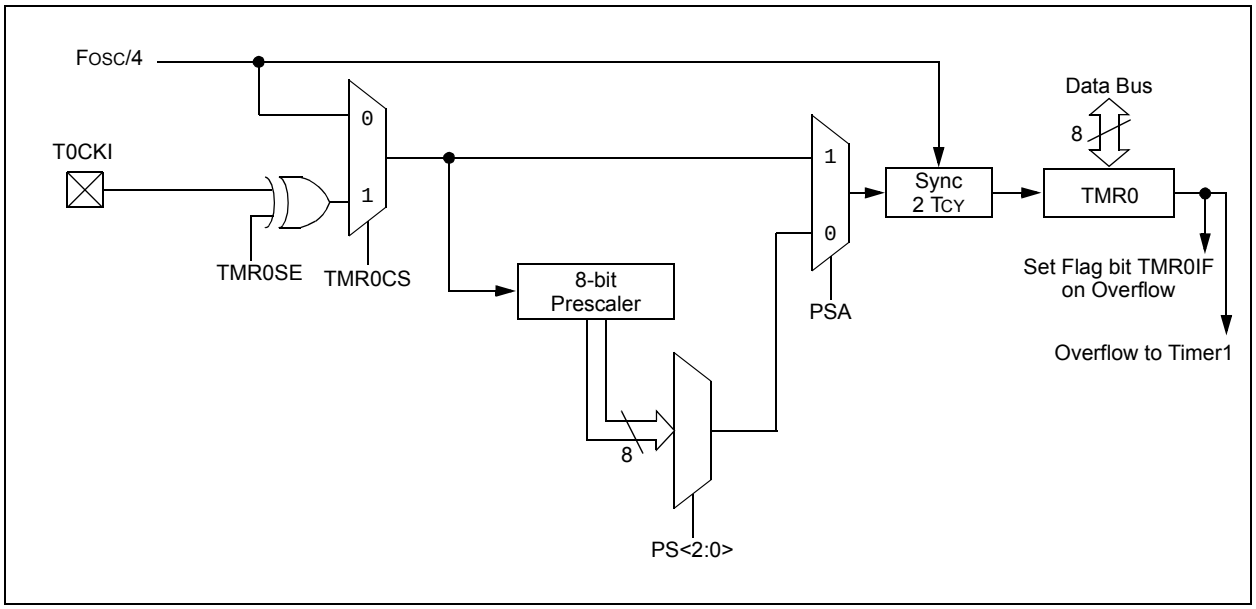

 © 2011 Microchip Technology Inc.

16.1.3 SOFTWARE PROGRAMMABLE PRESCALER

A software programmable prescaler is available for exclusive use with Timer0. The prescaler is enabled by clearing the PSA bit of the OPTION_REG register.

Note:	The Watchdog Timer (WDT) uses its own independent prescaler.

There are 8 prescaler options for the Timer0 module ranging from 1:2 to 1:256. The prescale values are selectable via the PS<2:0> bits of the OPTION_REG register. In order to have a 1:1 prescaler value for the Timer0 module, the prescaler must be disabled by setting the PSA bit of the OPTION_REG register.

The prescaler is not readable or writable. All instructions writing to the TMR0 register will clear the prescaler.

16.1.4 TIMER0 INTERRUPT

Timer0 will generate an interrupt when the TMR0 register overflows from FFh to 00h. The TMR0IF interrupt flag bit of the INTCON register is set every time the TMR0 register overflows, regardless of whether or not the Timer0 interrupt is enabled. The TMR0IF bit can only be cleared in software. The Timer0 interrupt enable is the TMR0IE bit of the INTCON register.

Note:	The Timer0 interrupt cannot wake the processor from Sleep since the timer is frozen during Sleep.

16.1.5 8-BIT COUNTER MODE SYNCHRONIZATION

When in 8-Bit Counter mode, the incrementing edge on the T0CKI pin must be synchronized to the instruction clock. Synchronization can be accomplished by sampling the prescaler output on the Q2 and Q4 cycles of the instruction clock. The high and low periods of the external clocking source must meet the timing requirements as shown in **Section 25.0 "Electrical Specifications"**.

16.1.6 OPERATION DURING SLEEP

Timer0 cannot operate while the processor is in Sleep mode. The contents of the TMR0 register will remain unchanged while the processor is in Sleep mode.

16.2 Option and Timer0 Control Register

REGISTER 16-1: OPTION_REG: OPTION REGISTER

R/W-1/1	R/W-1/1	R/W-1/1	R/W-1/1	R/W-1/1	R/W-1/1	R/W-1/1	R/W-1/1
$\overline{\text{WPUEN}}$	INTEDG	TMR0CS	TMR0SE	PSA	PS<2:0>		
bit 7							bit 0

Legend:		
R = Readable bit	W = Writable bit	U = Unimplemented bit, read as '0'
u = Bit is unchanged	x = Bit is unknown	-n/n = Value at POR and BOR/Value at all other Resets
'1' = Bit is set	'0' = Bit is cleared	

bit 7 **$\overline{\text{WPUEN}}$:** Weak Pull-Up Enable bit
1 = All weak pull-ups are disabled (except $\overline{\text{MCLR}}$, if it is enabled)
0 = Weak pull-ups are enabled by individual WPUx latch values

bit 6 **INTEDG:** Interrupt Edge Select bit
1 = Interrupt on rising edge of INT pin
0 = Interrupt on falling edge of INT pin

bit 5 **TMR0CS:** Timer0 Clock Source Select bit
1 = Transition on T0CKI pin
0 = Internal instruction cycle clock (FOSC/4)

bit 4 **TMR0SE:** Timer0 Source Edge Select bit
1 = Increment on high-to-low transition on T0CKI pin
0 = Increment on low-to-high transition on T0CKI pin

bit 3 **PSA:** Prescaler Assignment bit
1 = Prescaler is not assigned to the Timer0 module
0 = Prescaler is assigned to the Timer0 module

bit 2-0 **PS<2:0>:** Prescaler Rate Select bits

Bit Value	Timer0 Rate
000	1 : 2
001	1 : 4
010	1 : 8
011	1 : 16
100	1 : 32
101	1 : 64
110	1 : 128
111	1 : 256

TABLE 16-1: SUMMARY OF REGISTERS ASSOCIATED WITH TIMER0

Name	Bit 7	Bit 6	Bit 5	Bit 4	Bit 3	Bit 2	Bit 1	Bit 0	Register on Page
ADCON2	TRIGSEL<3:0>				—	—	—	—	129
INTCON	GIE	PEIE	TMR0IE	INTE	IOCIE	TMR0IF	INTF	IOCIF	66
OPTION_REG	$\overline{\text{WPUEN}}$	INTEDG	TMR0CS	TMR0SE	PSA	PS<2:0>			137
TMR0	Holding Register for the 8-bit Timer0 Count								135*
TRISA	—	—	TRISA5	TRISA4	—(1)	TRISA2	TRISA1	TRISA0	102

Legend: — = Unimplemented location, read as '0'. Shaded cells are not used by the Timer0 module.
* Page provides register information.
Note 1: Unimplemented, read as '1'.

 © 2011 Microchip Technology Inc.

NOTES:

17.0 TIMER1 MODULE WITH GATE CONTROL

The Timer1 module is a 16-bit timer/counter with the following features:

- 16-bit timer/counter register pair (TMR1H:TMR1L)
- Programmable internal or external clock source
- 2-bit prescaler
- Optionally synchronized comparator out
- Multiple Timer1 gate (count enable) sources
- Interrupt on overflow
- Wake-up on overflow (external clock, Asynchronous mode only)
- Special Event Trigger
- Selectable Gate Source Polarity
- Gate Toggle mode
- Gate Single-Pulse mode
- Gate Value Status
- Gate Event Interrupt

Figure 17-1 is a block diagram of the Timer1 module.

FIGURE 17-1: TIMER1 BLOCK DIAGRAM

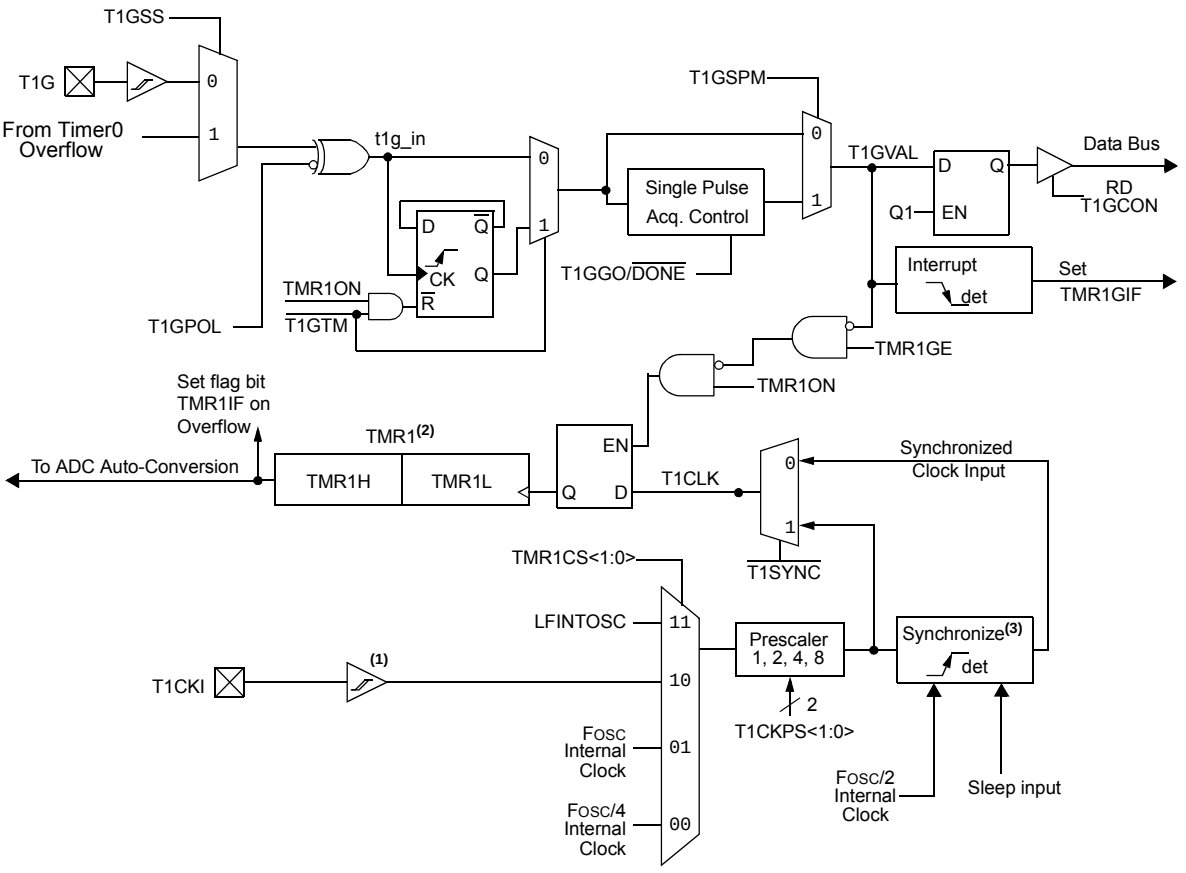

Note 1: ST Buffer is high speed type when using T1CKI.
2: Timer1 register increments on rising edge.
3: Synchronize does not operate while in Sleep.

 © 2011 Microchip Technology Inc.

17.1 Timer1 Operation

The Timer1 module is a 16-bit incrementing counter which is accessed through the TMR1H:TMR1L register pair. Writes to TMR1H or TMR1L directly update the counter.

When used with an internal clock source, the module is a timer and increments on every instruction cycle. When used with an external clock source, the module can be used as either a timer or counter and increments on every selected edge of the external source.

Timer1 is enabled by configuring the TMR1ON and TMR1GE bits in the T1CON and T1GCON registers, respectively. Table 17-1 displays the Timer1 enable selections.

TABLE 17-1: TIMER1 ENABLE SELECTIONS

TMR1ON	TMR1GE	Timer1 Operation
0	0	Off
0	1	Off
1	0	Always On
1	1	Count Enabled

17.2 Clock Source Selection

The TMR1CS<1:0> bits of the T1CON register are used to select the clock source for Timer1. Table 17-2 displays the clock source selections.

17.2.1 INTERNAL CLOCK SOURCE

When the internal clock source is selected the TMR1H:TMR1L register pair will increment on multiples of FOSC as determined by the Timer1 prescaler.

When the FOSC internal clock source is selected, the Timer1 register value will increment by four counts every instruction clock cycle. Due to this condition, a 2 LSB error in resolution will occur when reading the Timer1 value. To utilize the full resolution of Timer1, an asynchronous input signal must be used to gate the Timer1 clock input.

The following asynchronous sources may be used:

- Asynchronous event on the T1G pin to Timer1 gate

17.2.2 EXTERNAL CLOCK SOURCE

When the external clock source is selected, the Timer1 module may work as a timer or a counter.

When enabled to count, Timer1 is incremented on the rising edge of the external clock input T1CKI. The external clock source can be synchronized to the microcontroller system clock or it can run asynchronously.

Note: In Counter mode, a falling edge must be registered by the counter prior to the first incrementing rising edge after any one or more of the following conditions:

- Timer1 enabled after POR
- Write to TMR1H or TMR1L
- Timer1 is disabled
- Timer1 is disabled (TMR1ON = 0) when T1CKI is high then Timer1 is enabled (TMR1ON=1) when T1CKI is low.

TABLE 17-2: CLOCK SOURCE SELECTIONS

TMR1CS<1:0>		T1OSCEN	Clock Source
1	1	x	LFINTOSC
1	0	0	External Clocking on T1CKI Pin
0	1	x	System Clock (FOSC)
0	0	x	Instruction Clock (FOSC/4)

17.3 Timer1 Prescaler

Timer1 has four prescaler options allowing 1, 2, 4 or 8 divisions of the clock input. The T1CKPS bits of the T1CON register control the prescale counter. The prescale counter is not directly readable or writable; however, the prescaler counter is cleared upon a write to TMR1H or TMR1L.

17.4 Timer1 Operation in Asynchronous Counter Mode

If control bit $\overline{\text{T1SYNC}}$ of the T1CON register is set, the external clock input is not synchronized. The timer increments asynchronously to the internal phase clocks. If the external clock source is selected then the timer will continue to run during Sleep and can generate an interrupt on overflow, which will wake-up the processor. However, special precautions in software are needed to read/write the timer (see **Section 17.4.1 "Reading and Writing Timer1 in Asynchronous Counter Mode"**).

Note:	When switching from synchronous to asynchronous operation, it is possible to skip an increment. When switching from asynchronous to synchronous operation, it is possible to produce an additional increment.

17.4.1 READING AND WRITING TIMER1 IN ASYNCHRONOUS COUNTER MODE

Reading TMR1H or TMR1L while the timer is running from an external asynchronous clock will ensure a valid read (taken care of in hardware). However, the user should keep in mind that reading the 16-bit timer in two 8-bit values itself, poses certain problems, since the timer may overflow between the reads.

For writes, it is recommended that the user simply stop the timer and write the desired values. A write contention may occur by writing to the timer registers, while the register is incrementing. This may produce an unpredictable value in the TMR1H:TMR1L register pair.

17.5 Timer1 Gate

Timer1 can be configured to count freely or the count can be enabled and disabled using Timer1 gate circuitry. This is also referred to as Timer1 Gate Enable.

Timer1 gate can also be driven by multiple selectable sources.

17.5.1 TIMER1 GATE ENABLE

The Timer1 Gate Enable mode is enabled by setting the TMR1GE bit of the T1GCON register. The polarity of the Timer1 Gate Enable mode is configured using the T1GPOL bit of the T1GCON register.

When Timer1 Gate Enable mode is enabled, Timer1 will increment on the rising edge of the Timer1 clock source. When Timer1 Gate Enable mode is disabled, no incrementing will occur and Timer1 will hold the current count. See Figure 17-3 for timing details.

TABLE 17-3: TIMER1 GATE ENABLE SELECTIONS

T1CLK	T1GPOL	T1G	Timer1 Operation
↑	0	0	Counts
↑	0	1	Holds Count
↑	1	0	Holds Count
↑	1	1	Counts

17.5.2 TIMER1 GATE SOURCE SELECTION

Timer1 gate source selections are shown in Table 17-4. Source selection is controlled by the T1GSS bit of the T1GCON register. The polarity for each available source is also selectable. Polarity selection is controlled by the T1GPOL bit of the T1GCON register.

TABLE 17-4: TIMER1 GATE SOURCES

T1GSS	Timer1 Gate Source
0	Timer1 Gate Pin
1	Overflow of Timer0 (TMR0 increments from FFh to 00h)

 © 2011 Microchip Technology Inc.

17.5.2.1 T1G Pin Gate Operation

The T1G pin is one source for Timer1 Gate Control. It can be used to supply an external source to the Timer1 gate circuitry.

17.5.2.2 Timer0 Overflow Gate Operation

When Timer0 increments from FFh to 00h, a low-to-high pulse will automatically be generated and internally supplied to the Timer1 gate circuitry.

17.5.3 TIMER1 GATE TOGGLE MODE

When Timer1 Gate Toggle mode is enabled, it is possible to measure the full-cycle length of a Timer1 gate signal, as opposed to the duration of a single level pulse.

The Timer1 gate source is routed through a flip-flop that changes state on every incrementing edge of the signal. See Figure 17-4 for timing details.

Timer1 Gate Toggle mode is enabled by setting the T1GTM bit of the T1GCON register. When the T1GTM bit is cleared, the flip-flop is cleared and held clear. This is necessary in order to control which edge is measured.

Note:	Enabling Toggle mode at the same time as changing the gate polarity may result in indeterminate operation.

17.5.4 TIMER1 GATE SINGLE-PULSE MODE

When Timer1 Gate Single-Pulse mode is enabled, it is possible to capture a single pulse gate event. Timer1 Gate Single-Pulse mode is first enabled by setting the T1GSPM bit in the T1GCON register. Next, the T1GGO/$\overline{\text{DONE}}$ bit in the T1GCON register must be set. The Timer1 will be fully enabled on the next incrementing edge. On the next trailing edge of the pulse, the T1GGO/$\overline{\text{DONE}}$ bit will automatically be cleared. No other gate events will be allowed to increment Timer1 until the T1GGO/$\overline{\text{DONE}}$ bit is once again set in software. See Figure 17-5 for timing details.

If the Single Pulse Gate mode is disabled by clearing the T1GSPM bit in the T1GCON register, the T1GGO/$\overline{\text{DONE}}$ bit should also be cleared.

Enabling the Toggle mode and the Single-Pulse mode simultaneously will permit both sections to work together. This allows the cycle times on the Timer1 gate source to be measured. See Figure 17-6 for timing details.

17.5.5 TIMER1 GATE VALUE STATUS

When Timer1 Gate Value Status is utilized, it is possible to read the most current level of the gate control value. The value is stored in the T1GVAL bit in the T1GCON register. The T1GVAL bit is valid even when the Timer1 gate is not enabled (TMR1GE bit is cleared).

17.5.6 TIMER1 GATE EVENT INTERRUPT

When Timer1 Gate Event Interrupt is enabled, it is possible to generate an interrupt upon the completion of a gate event. When the falling edge of T1GVAL occurs, the TMR1GIF flag bit in the PIR1 register will be set. If the TMR1GIE bit in the PIE1 register is set, then an interrupt will be recognized.

The TMR1GIF flag bit operates even when the Timer1 gate is not enabled (TMR1GE bit is cleared).

17.6 Timer1 Interrupt

The Timer1 register pair (TMR1H:TMR1L) increments to FFFFh and rolls over to 0000h. When Timer1 rolls over, the Timer1 interrupt flag bit of the PIR1 register is set. To enable the interrupt on rollover, you must set these bits:

- TMR1ON bit of the T1CON register
- TMR1IE bit of the PIE1 register
- PEIE bit of the INTCON register
- GIE bit of the INTCON register

The interrupt is cleared by clearing the TMR1IF bit in the Interrupt Service Routine.

Note:	The TMR1H:TMR1L register pair and the TMR1IF bit should be cleared before enabling interrupts.

17.7 Timer1 Operation During Sleep

Timer1 can only operate during Sleep when setup in Asynchronous Counter mode. In this mode, an external crystal or clock source can be used to increment the counter. To set up the timer to wake the device:

- TMR1ON bit of the T1CON register must be set
- TMR1IE bit of the PIE1 register must be set
- PEIE bit of the INTCON register must be set
- $\overline{\text{T1SYNC}}$ bit of the T1CON register must be set
- TMR1CS bits of the T1CON register must be configured

The device will wake-up on an overflow and execute the next instructions. If the GIE bit of the INTCON register is set, the device will call the Interrupt Service Routine.

Timer1 oscillator will continue to operate in Sleep regardless of the $\overline{\text{T1SYNC}}$ bit setting.

FIGURE 17-2: TIMER1 INCREMENTING EDGE

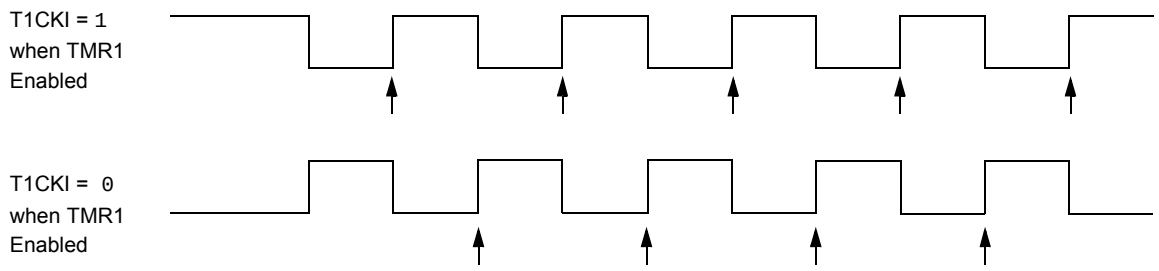

Note 1: Arrows indicate counter increments.

2: In Counter mode, a falling edge must be registered by the counter prior to the first incrementing rising edge of the clock.

 © 2011 Microchip Technology Inc.

FIGURE 17-3: TIMER1 GATE ENABLE MODE

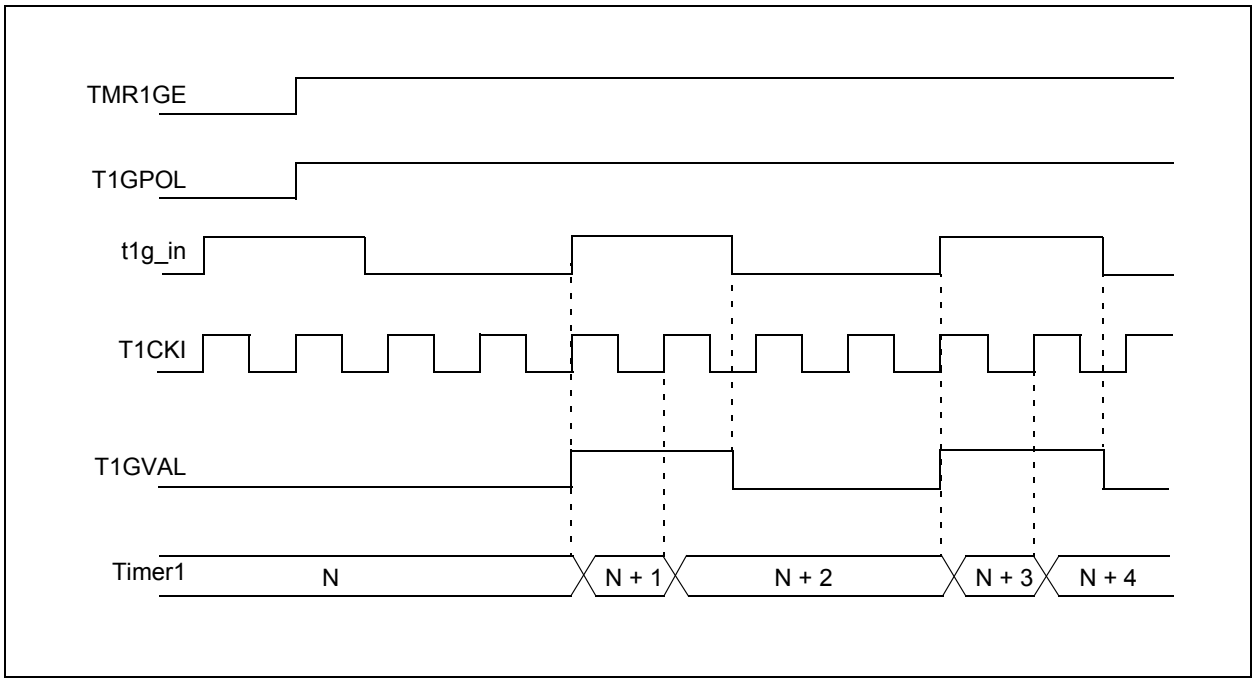

FIGURE 17-4: TIMER1 GATE TOGGLE MODE

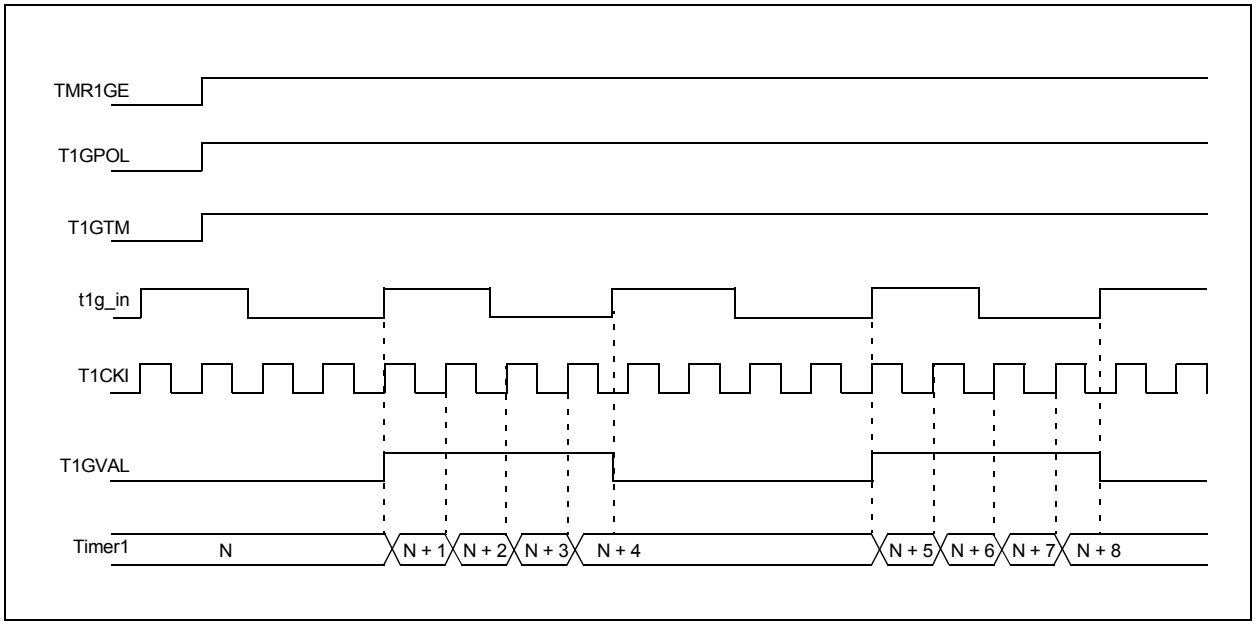

FIGURE 17-5: TIMER1 GATE SINGLE-PULSE MODE

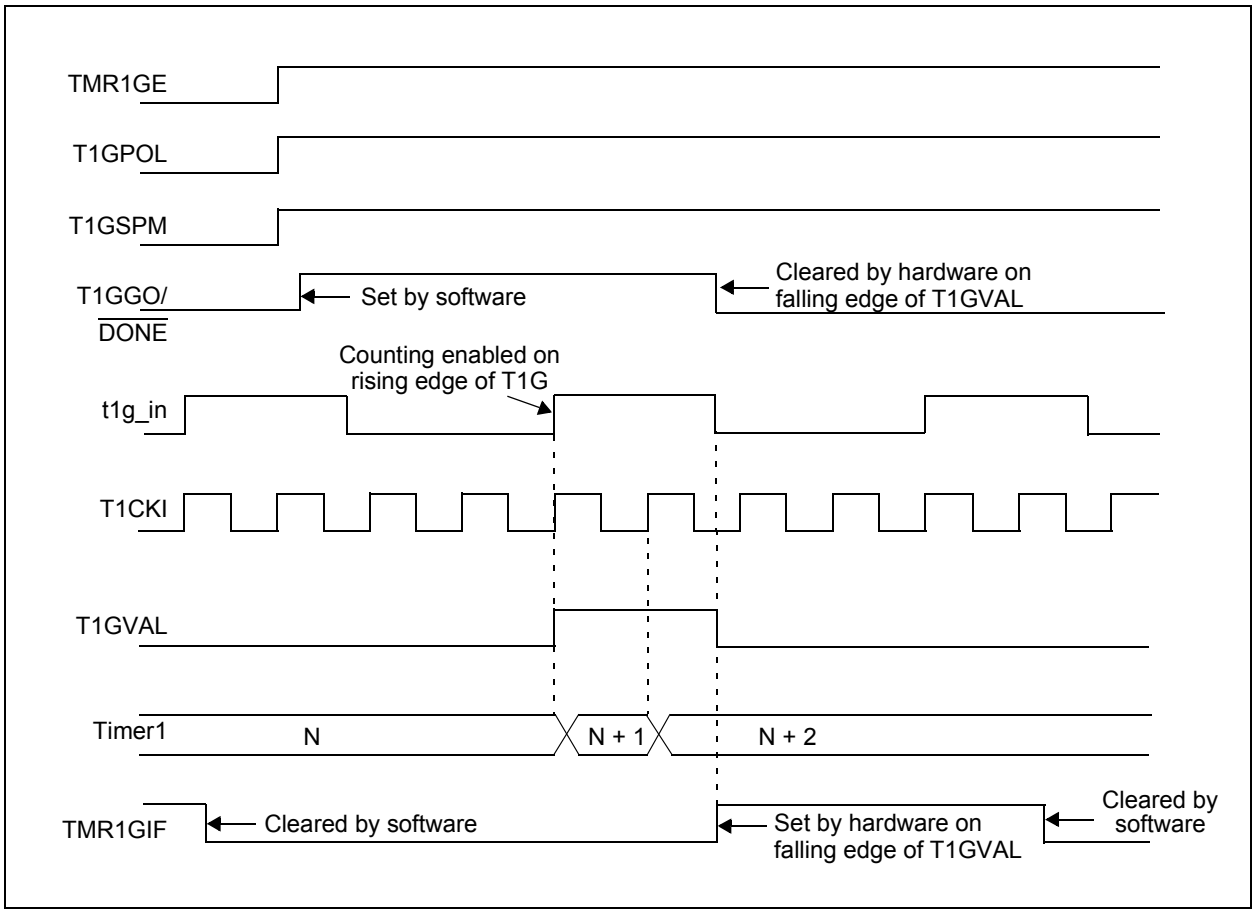

 © 2011 Microchip Technology Inc.

FIGURE 17-6: TIMER1 GATE SINGLE-PULSE AND TOGGLE COMBINED MODE

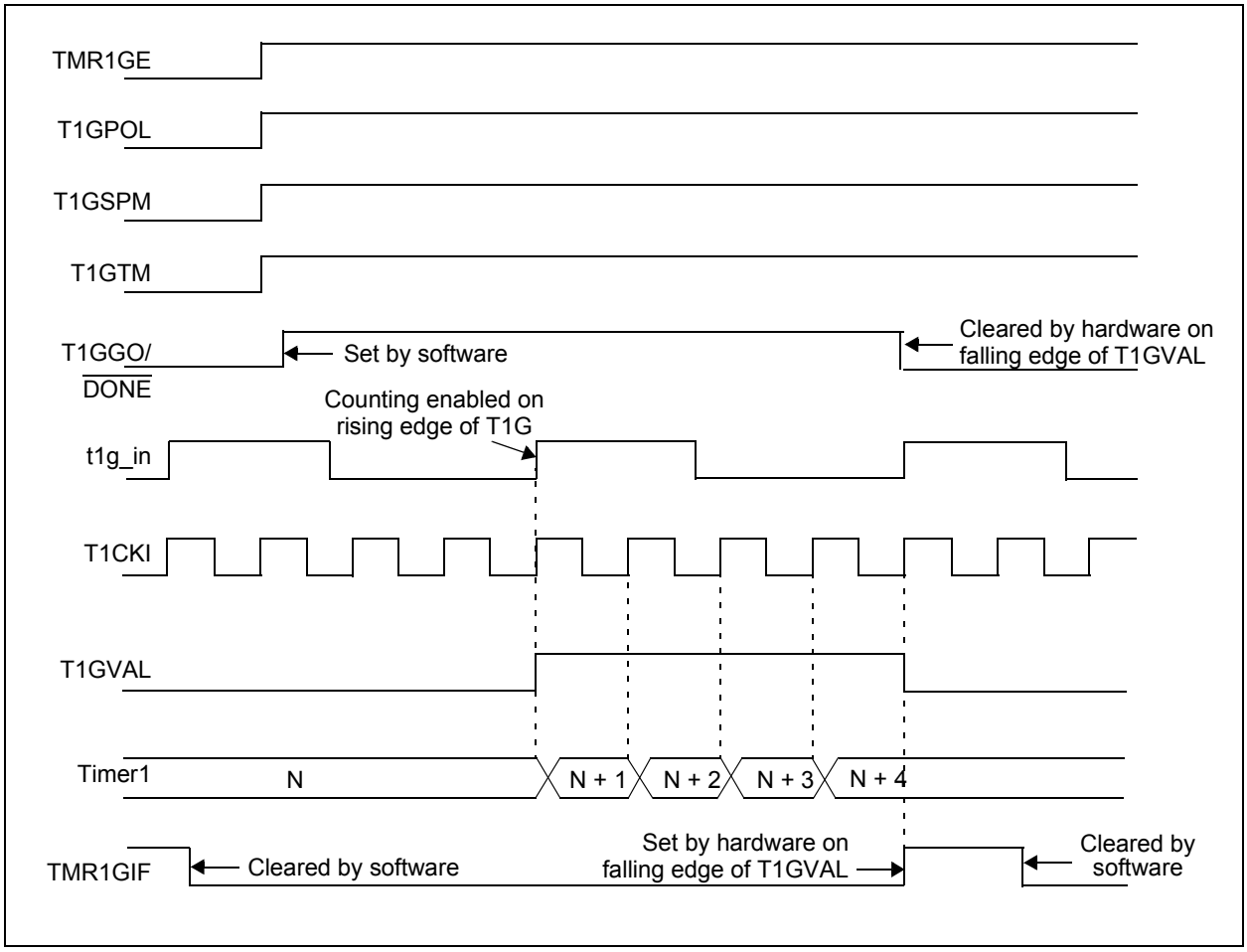

17.8 Timer1 Control Registers

REGISTER 17-1: T1CON: TIMER1 CONTROL REGISTER

R/W-0/u	R/W-0/u	R/W-0/u	R/W-0/u	U-0	R/W-0/u	U-0	R/W-0/u
TMR1CS<1:0>		T1CKPS<1:0>		—	$\overline{\text{T1SYNC}}$	—	TMR1ON
bit 7							bit 0

Legend:		
R = Readable bit	W = Writable bit	U = Unimplemented bit, read as ‘0’
u = Bit is unchanged	x = Bit is unknown	-n/n = Value at POR and BOR/Value at all other Resets
‘1’ = Bit is set	‘0’ = Bit is cleared	

bit 7-6 **TMR1CS<1:0>:** Timer1 Clock Source Select bits
- 11 = Timer1 clock source is LFINTOSC
- 10 = Timer1 clock source is T1CKI pin (on rising edge)
- 01 = Timer1 clock source is system clock (FOSC)
- 00 = Timer1 clock source is instruction clock (FOSC/4)

bit 5-4 **T1CKPS<1:0>:** Timer1 Input Clock Prescale Select bits
- 11 = 1:8 Prescale value
- 10 = 1:4 Prescale value
- 01 = 1:2 Prescale value
- 00 = 1:1 Prescale value

bit 3 **Unimplemented:** Read as ‘0’

bit 2 **$\overline{\text{T1SYNC}}$:** Timer1 Synchronization Control bit
- 1 = Do not synchronize asynchronous clock input
- 0 = Synchronize asynchronous clock input with system clock (FOSC)

bit 1 **Unimplemented:** Read as ‘0’

bit 0 **TMR1ON:** Timer1 On bit
- 1 = Enables Timer1
- 0 = Stops Timer1 and clears Timer1 gate flip-flop

 © 2011 Microchip Technology Inc.

REGISTER 17-2: T1GCON: TIMER1 GATE CONTROL REGISTER

R/W-0/u	R/W-0/u	R/W-0/u	R/W-0/u	R/W/HC-0/u	R-x/x	U-0	R/W-0/u
TMR1GE	T1GPOL	T1GTM	T1GSPM	T1GGO/$\overline{\text{DONE}}$	T1GVAL	—	T1GSS
bit 7							bit 0

Legend:		
R = Readable bit	W = Writable bit	U = Unimplemented bit, read as ‘0’
u = Bit is unchanged	x = Bit is unknown	-n/n = Value at POR and BOR/Value at all other Resets
‘1’ = Bit is set	‘0’ = Bit is cleared	HC = Bit is cleared by hardware

bit 7 **TMR1GE:** Timer1 Gate Enable bit

If TMR1ON = 0:
This bit is ignored
If TMR1ON = 1:
1 = Timer1 counting is controlled by the Timer1 gate function
0 = Timer1 counts regardless of Timer1 gate function

bit 6 **T1GPOL:** Timer1 Gate Polarity bit

1 = Timer1 gate is active-high (Timer1 counts when gate is high)
0 = Timer1 gate is active-low (Timer1 counts when gate is low)

bit 5 **T1GTM:** Timer1 Gate Toggle Mode bit

1 = Timer1 Gate Toggle mode is enabled
0 = Timer1 Gate Toggle mode is disabled and toggle flip-flop is cleared
Timer1 gate flip-flop toggles on every rising edge.

bit 4 **T1GSPM:** Timer1 Gate Single-Pulse Mode bit

1 = Timer1 gate Single-Pulse mode is enabled and is controlling Timer1 gate
0 = Timer1 gate Single-Pulse mode is disabled

bit 3 **T1GGO/$\overline{\text{DONE}}$:** Timer1 Gate Single-Pulse Acquisition Status bit

1 = Timer1 gate single-pulse acquisition is ready, waiting for an edge
0 = Timer1 gate single-pulse acquisition has completed or has not been started

bit 2 **T1GVAL:** Timer1 Gate Current State bit

Indicates the current state of the Timer1 gate that could be provided to TMR1H:TMR1L.
Unaffected by Timer1 Gate Enable (TMR1GE).

bit 1 **Unimplemented:** Read as ‘0’

bit 0 **T1GSS:** Timer1 Gate Source Select bit

0 = Timer1 gate pin
1 = Timer0 overflow output

TABLE 17-5: SUMMARY OF REGISTERS ASSOCIATED WITH TIMER1

Name	Bit 7	Bit 6	Bit 5	Bit 4	Bit 3	Bit 2	Bit 1	Bit 0	Register on Page
ANSELA	—	—	—	ANSA4	—	ANSA2	ANSA1	ANSA0	103
INTCON	GIE	PEIE	TMR0IE	INTE	IOCIE	TMR0IF	INTF	IOCIF	66
PIE1	TMR1GIE	ADIE	—	—	—	—	TMR2IE	TMR1IE	67
PIR1	TMR1GIF	ADIF	—	—	—	—	TMR2IF	TMR1IF	70
TMR1H	Holding Register for the Most Significant Byte of the 16-bit TMR1 Count								143*
TMR1L	Holding Register for the Least Significant Byte of the 16-bit TMR1 Count								143*
TRISA	—	—	TRISA5	TRISA4	—(1)	TRISA2	TRISA1	TRISA0	102
T1CON	TMR1CS<1:0>		T1CKPS<1:0>		—	$\overline{\text{T1SYNC}}$	—	TMR1ON	147
T1GCON	TMR1GE	T1GPOL	T1GTM	T1GSPM	T1GGO/$\overline{\text{DONE}}$	T1GVAL	—	T1GSS	148

Legend: — = unimplemented location, read as '0'. Shaded cells are not used by the Timer1 module.
* Page provides register information.

Note 1: Unimplemented, read as '1'.

© 2011 Microchip Technology Inc.

NOTES:

18.0 TIMER2 MODULE

The Timer2 module incorporates the following features:

- 8-bit Timer and Period registers (TMR2 and PR2, respectively)
- Readable and writable (both registers)
- Software programmable prescaler (1:1, 1:4, 1:16, and 1:64)
- Software programmable postscaler (1:1 to 1:16)
- Interrupt on TMR2 match with PR2, respectively
- Optional use as the shift clock for the MSSP modules

See Figure 18-1 for a block diagram of Timer2.

FIGURE 18-1: TIMER2 BLOCK DIAGRAM

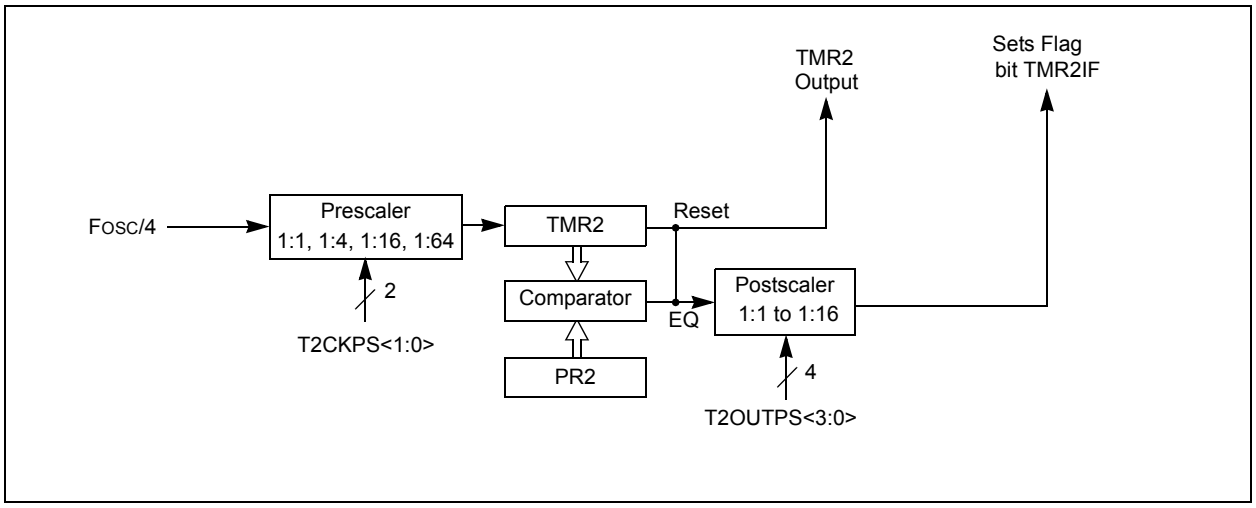

 © 2011 Microchip Technology Inc.

18.1 Timer2 Operation

The clock input to the Timer2 module is the system instruction clock (FOSC/4).

TMR2 increments from 00h on each clock edge.

A 4-bit counter/prescaler on the clock input allows direct input, divide-by-4 and divide-by-16 prescale options. These options are selected by the prescaler control bits, T2CKPS<1:0> of the T2CON register. The value of TMR2 is compared to that of the Period register, PR2, on each clock cycle. When the two values match, the comparator generates a match signal as the timer output. This signal also resets the value of TMR2 to 00h on the next cycle and drives the output counter/postscaler (see **Section 18.2 "Timer2 Interrupt"**).

The TMR2 and PR2 registers are both directly readable and writable. The TMR2 register is cleared on any device Reset, whereas the PR2 register initializes to FFh. Both the prescaler and postscaler counters are cleared on the following events:

- a write to the TMR2 register
- a write to the T2CON register
- Power-on Reset (POR)
- Brown-out Reset (BOR)
- $\overline{\text{MCLR}}$ Reset
- Watchdog Timer (WDT) Reset
- Stack Overflow Reset
- Stack Underflow Reset
- RESET Instruction

Note:	TMR2 is not cleared when T2CON is written.

18.2 Timer2 Interrupt

Timer2 can also generate an optional device interrupt. The Timer2 output signal (TMR2-to-PR2 match) provides the input for the 4-bit counter/postscaler. This counter generates the TMR2 match interrupt flag which is latched in TMR2IF of the PIR1 register. The interrupt is enabled by setting the TMR2 Match Interrupt Enable bit, TMR2IE of the PIE1 register.

A range of 16 postscale options (from 1:1 through 1:16 inclusive) can be selected with the postscaler control bits, T2OUTPS<3:0>, of the T2CON register.

18.3 Timer2 Output

The unscaled output of TMR2 is available primarily to the PWMx module, where it is used as a time base for operation.

18.4 Timer2 Operation During Sleep

Timer2 cannot be operated while the processor is in Sleep mode. The contents of the TMR2 and PR2 registers will remain unchanged while the processor is in Sleep mode.

REGISTER 18-1: T2CON: TIMER2 CONTROL REGISTER

U-0	R/W-0/0	R/W-0/0	R/W-0/0	R/W-0/0	R/W-0/0	R/W-0/0	R/W-0/0
—	T2OUTPS<3:0>				TMR2ON	T2CKPS<1:0>	
bit 7							bit 0

Legend:		
R = Readable bit	W = Writable bit	U = Unimplemented bit, read as ‘0’
u = Bit is unchanged	x = Bit is unknown	-n/n = Value at POR and BOR/Value at all other Resets
‘1’ = Bit is set	‘0’ = Bit is cleared	

bit 7 **Unimplemented:** Read as ‘0’

bit 6-3 **T2OUTPS<3:0>:** Timer2 Output Postscaler Select bits
0000 = 1:1 Postscaler
0001 = 1:2 Postscaler
0010 = 1:3 Postscaler
0011 = 1:4 Postscaler
0100 = 1:5 Postscaler
0101 = 1:6 Postscaler
0110 = 1:7 Postscaler
0111 = 1:8 Postscaler
1000 = 1:9 Postscaler
1001 = 1:10 Postscaler
1010 = 1:11 Postscaler
1011 = 1:12 Postscaler
1100 = 1:13 Postscaler
1101 = 1:14 Postscaler
1110 = 1:15 Postscaler
1111 = 1:16 Postscaler

bit 2 **TMR2ON:** Timer2 On bit
1 = Timer2 is on
0 = Timer2 is off

bit 1-0 **T2CKPS<1:0>:** Timer2 Clock Prescale Select bits
00 = Prescaler is 1
01 = Prescaler is 4
10 = Prescaler is 16
11 = Prescaler is 64

 © 2011 Microchip Technology Inc.

TABLE 18-1: SUMMARY OF REGISTERS ASSOCIATED WITH TIMER2

Name	Bit 7	Bit 6	Bit 5	Bit 4	Bit 3	Bit 2	Bit 1	Bit 0	Register on Page
INTCON	GIE	PEIE	TMR0IE	INTE	IOCIE	TMR0IF	INTF	IOCIF	66
PIE1	TMR1GIE	ADIE	—	—	—	—	TMR2IE	TMR1IE	67
PIR1	TMR1GIF	ADIF	—	—	—	—	TMR2IF	TMR1IF	70
PR2	Timer2 Module Period Register								151*
PWM1CON	PWM1EN	PWM1OE	PWM1OUT	PWM1POL	—	—	—	—	159
PWM2CON	PWM2EN	PWM2OE	PWM2OUT	PWM2POL	—	—	—	—	159
PWM3CON	PWM3EN	PWM3OE	PWM3OUT	PWM3POL	—	—	—	—	159
PWM4CON	PWM4EN	PWM4OE	PWM4OUT	PWM4POL	—	—	—	—	159
T2CON	—	T2OUTPS<3:0>				TMR2ON	T2CKPS<1:0>		153
TMR2	Holding Register for the 8-bit TMR2 Count								151*

Legend: — = unimplemented location, read as '0'. Shaded cells are not used for Timer2/4/6 module.

* Page provides register information.

19.0 PULSE WIDTH MODULATION (PWM) MODULE

The PWM module generates a Pulse-Width Modulated signal determined by the duty cycle, period, and resolution that are configured by the following registers:

- PR2
- T2CON
- PWMxDCH
- PWMxDCL
- PWMxCON

Figure 19-2 shows a simplified block diagram of PWM operation.

Figure 19-1 shows a typical waveform of the PWM signal.

For a step-by-step procedure on how to set up this module for PWM operation, refer to **Section 19.1.9 "Setup for PWM Operation using PWMx Pins"**.

FIGURE 19-1: PWM OUTPUT

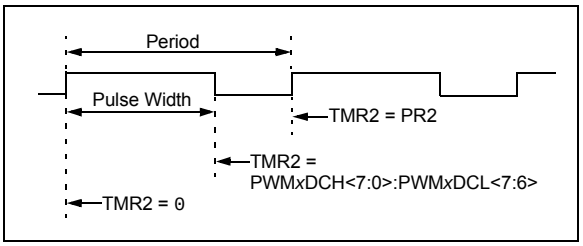

FIGURE 19-2: SIMPLIFIED PWM BLOCK DIAGRAM

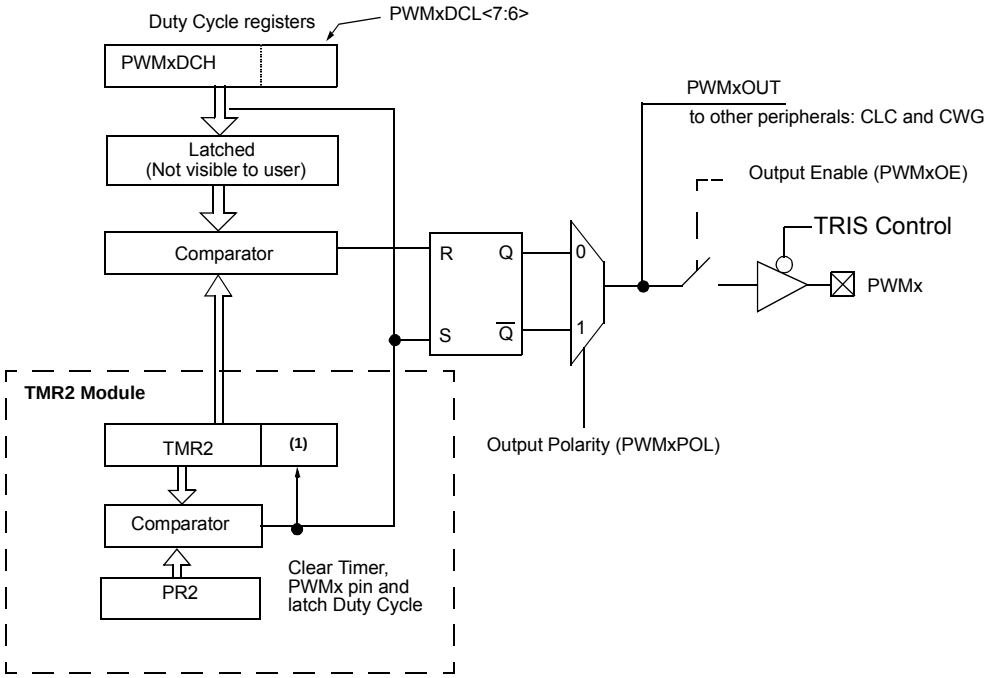

Note 1: 8-bit timer is concatenated with the two Least Significant bits of 1/FOSC adjusted by the Timer2 prescaler to create a 10-bit time base.

 © 2011 Microchip Technology Inc.

19.1 PWMx Pin Configuration

All PWM outputs are multiplexed with the PORT data latch. The user must configure the pins as outputs by clearing the associated TRIS bits.

Note:	Clearing the PWMxOE bit will relinquish control of the PWMx pin.

19.1.1 FUNDAMENTAL OPERATION

The PWM module produces a 10-bit resolution output. Timer2 and PR2 set the period of the PWM. The PWMxDCL and PWMxDCH registers configure the duty cycle. The period is common to all PWM modules, whereas the duty cycle is independently controlled.

Note:	The Timer2 postscaler is not used in the determination of the PWM frequency. The postscaler could be used to have a servo update rate at a different frequency than the PWM output.

All PWM outputs associated with Timer2 are set when TMR2 is cleared. Each PWMx is cleared when TMR2 is equal to the value specified in the corresponding PWMxDCH (8 MSb) and PWMxDCL<7:6> (2 LSb) registers. When the value is greater than or equal to PR2, the PWM output is never cleared (100% duty cycle).

Note:	The PWMxDCH and PWMxDCL registers are double buffered. The buffers are updated when Timer2 matches PR2. Care should be taken to update both registers before the timer match occurs.

19.1.2 PWM OUTPUT POLARITY

The output polarity is inverted by setting the PWMxPOL bit of the PWMxCON register.

19.1.3 PWM PERIOD

The PWM period is specified by the PR2 register of Timer2. The PWM period can be calculated using the formula of Equation 19-1.

EQUATION 19-1: PWM PERIOD

$$PWM\ Period = [(PR2) + 1] \bullet 4 \bullet T_{OSC} \bullet (TMR2\ Prescale\ Value)$$

Note: TOSC = 1/FOSC

When TMR2 is equal to PR2, the following three events occur on the next increment cycle:

- TMR2 is cleared
- The PWM output is active. (Exception: When the PWM duty cycle = 0%, the PWM output will remain inactive.)
- The PWMxDCH and PWMxDCL register values are latched into the buffers.

Note:	The Timer2 postscaler has no effect on the PWM operation.

19.1.4 PWM DUTY CYCLE

The PWM duty cycle is specified by writing a 10-bit value to the PWMxDCH and PWMxDCL register pair. The PWMxDCH register contains the eight MSbs and the PWMxDCL<7:6>, the two LSbs. The PWMxDCH and PWMxDCL registers can be written to at any time.

Equation 19-2 is used to calculate the PWM pulse width.

Equation 19-3 is used to calculate the PWM duty cycle ratio.

EQUATION 19-2: PULSE WIDTH

$$Pulse\ Width = (PWMxDCH:PWMxDCL<7:6>) \bullet T_{OSC} \bullet (TMR2\ Prescale\ Value)$$

Note: TOSC = 1/FOSC

EQUATION 19-3: DUTY CYCLE RATIO

$$Duty\ Cycle\ Ratio = \frac{(PWMxDCH:PWMxDCL<7:6>)}{4(PR2 + 1)}$$

The 8-bit timer TMR2 register is concatenated with the two Least Significant bits of 1/FOSC, adjusted by the Timer2 prescaler to create the 10-bit time base. The system clock is used if the Timer2 prescaler is set to 1:1.

19.1.5 PWM RESOLUTION

The resolution determines the number of available duty cycles for a given period. For example, a 10-bit resolution will result in 1024 discrete duty cycles, whereas an 8-bit resolution will result in 256 discrete duty cycles.

The maximum PWM resolution is 10 bits when PR2 is 255. The resolution is a function of the PR2 register value as shown by Equation 19-4.

EQUATION 19-4: PWM RESOLUTION

$$Resolution = \frac{log[4(PR2 + 1)]}{log(2)} \ bits$$

Note: If the pulse width value is greater than the period the assigned PWM pin(s) will remain unchanged.

TABLE 19-1: EXAMPLE PWM FREQUENCIES AND RESOLUTIONS (FOSC = 20 MHz)

PWM Frequency	0.31 kHz	4.88 kHz	19.53 kHz	78.12 kHz	156.3 kHz	208.3 kHz
Timer Prescale (1, 4, 64)	64	4	1	1	1	1
PR2 Value	0xFF	0xFF	0xFF	0x3F	0x1F	0x17
Maximum Resolution (bits)	10	10	10	8	7	6.6

TABLE 19-2: EXAMPLE PWM FREQUENCIES AND RESOLUTIONS (FOSC = 8 MHz)

PWM Frequency	0.31 kHz	4.90 kHz	19.61 kHz	76.92 kHz	153.85 kHz	200.0 kHz
Timer Prescale (1, 4, 64)	64	4	1	1	1	1
PR2 Value	0x65	0x65	0x65	0x19	0x0C	0x09
Maximum Resolution (bits)	8	8	8	6	5	5

19.1.6 OPERATION IN SLEEP MODE

In Sleep mode, the TMR2 register will not increment and the state of the module will not change. If the PWMx pin is driving a value, it will continue to drive that value. When the device wakes up, TMR2 will continue from its previous state.

19.1.7 CHANGES IN SYSTEM CLOCK FREQUENCY

The PWM frequency is derived from the system clock frequency (FOSC). Any changes in the system clock frequency will result in changes to the PWM frequency. Refer to **Section 5.0 "Oscillator Module"** for additional details.

19.1.8 EFFECTS OF RESET

Any Reset will force all ports to Input mode and the PWM registers to their Reset states.

 © 2011 Microchip Technology Inc.

19.1.9 SETUP FOR PWM OPERATION USING PWMx PINS

The following steps should be taken when configuring the module for PWM operation using the PWMx pins:

1. Disable the PWMx pin output driver(s) by setting the associated TRIS bit(s).
2. Clear the PWMxCON register.
3. Load the PR2 register with the PWM period value.
4. Clear the PWMxDCH register and bits <7:6> of the PWMxDCL register.
5. Configure and start Timer2:

- Clear the TMR2IF interrupt flag bit of the PIR1 register. See Note below.
- Configure the T2CKPS bits of the T2CON register with the Timer2 prescale value.
- Enable Timer2 by setting the TMR2ON bit of the T2CON register.

6. Enable PWM output pin and wait until Timer2 overflows, TMR2IF bit of the PIR1 register is set. See note below.
7. Enable the PWMx pin output driver(s) by clearing the associated TRIS bit(s) and setting the PWMxOE bit of the PWMxCON register.
8. Configure the PWM module by loading the PWMxCON register with the appropriate values.

Note 1: In order to send a complete duty cycle and period on the first PWM output, the above steps must be followed in the order given. If it is not critical to start with a complete PWM signal, then move Step 8 to replace Step 4.

2: For operation with other peripherals only, disable PWMx pin outputs.

19.2 PWM Register Definitions

REGISTER 19-1: PWMxCON: PWM CONTROL REGISTER

R/W-0/0	R/W-0/0	R-0/0	R/W-0/0	U-0	U-0	U-0	U-0
PWMxEN	PWMxOE	PWMxOUT	PWMxPOL	—	—	—	—
bit 7							bit 0

Legend:		
R = Readable bit	W = Writable bit	U = Unimplemented bit, read as ‘0’
u = Bit is unchanged	x = Bit is unknown	-n/n = Value at POR and BOR/Value at all other Resets
‘1’ = Bit is set	‘0’ = Bit is cleared	

bit 7 **PWMxEN:** PWM Module Enable bit
- 1 = PWM module is enabled
- 0 = PWM module is disabled

bit 6 **PWMxOE:** PWM Module Output Enable bit
- 1 = Output to PWMx pin is enabled
- 0 = Output to PWMx pin is disabled

bit 5 **PWMxOUT:** PWM Module Output Value bit

bit 4 **PWMxPOL:** PWMx Output Polarity Select bit
- 1 = PWM output is active low
- 0 = PWM output is active high

bit 3-0 **Unimplemented:** Read as ‘0’

 © 2011 Microchip Technology Inc.

REGISTER 19-2: PWMxDCH: PWM DUTY CYCLE HIGH BITS

R/W-x/u	R/W-x/u	R/W-x/u	R/W-x/u	R/W-x/u	R/W-x/u	R/W-x/u	R/W-x/u
PWMxDCH<7:0>							
bit 7							bit 0

Legend:		
R = Readable bit	W = Writable bit	U = Unimplemented bit, read as '0'
u = Bit is unchanged	x = Bit is unknown	-n/n = Value at POR and BOR/Value at all other Resets
'1' = Bit is set	'0' = Bit is cleared	

bit 7-0 **PWMxDCH<7:0>:** PWM Duty Cycle Most Significant bits
These bits are the MSbs of the PWM duty cycle. The two LSbs are found in the PWMxDCL register.

REGISTER 19-3: PWMxDCL: PWM DUTY CYCLE LOW BITS

R/W-x/u	R/W-x/u	U-0	U-0	U-0	U-0	U-0	U-0
PWMxDCL<7:6>		—	—	—	—	—	—
bit 7							bit 0

Legend:		
R = Readable bit	W = Writable bit	U = Unimplemented bit, read as '0'
u = Bit is unchanged	x = Bit is unknown	-n/n = Value at POR and BOR/Value at all other Resets
'1' = Bit is set	'0' = Bit is cleared	

bit 7-6 **PWMxDCL<7:6>:** PWM Duty Cycle Least Significant bits
These bits are the LSbs of the PWM duty cycle. The MSbs are found in the PWMxDCH register.

bit 5-0 **Unimplemented:** Read as '0'

TABLE 19-3: SUMMARY OF REGISTERS ASSOCIATED WITH PWM

Name	Bit 7	Bit 6	Bit 5	Bit 4	Bit 3	Bit 2	Bit 1	Bit 0	Register on Page
PR2	Timer2 module Period Register								151*
PWM1CON	PWM1EN	PWM1OE	PWM1OUT	PWM1POL	—	—	—	—	159
PWM1DCH	PWM1DCH<7:0>								160
PWM1DCL	PWM1DCL<7:6>		—	—	—	—	—	—	160
PWM2CON	PWM2EN	PWM2OE	PWM2OUT	PWM2POL	—	—	—	—	160
PWM2DCH	PWM2DCH<7:0>								160
PWM2DCL	PWM2DCL<7:6>		—	—	—	—	—	—	160
PWM3CON	PWM3EN	PWM3OE	PWM3OUT	PWM3POL	—	—	—	—	159
PWM3DCH	PWM3DCH<7:0>								160
PWM3DCL	PWM3DCL<7:6>		—	—	—	—	—	—	160
PWM4CON	PWM4EN	PWM4OE	PWM4OUT	PWM4POL	—	—	—	—	159
PWM4DCH	PWM4DCH<7:0>								160
PWM4DCL	PWM4DCL<7:6>		—	—	—	—	—	—	160
T2CON	—	T2OUTPS<3:0>				TMR2ON	T2CKPS<1:0>		153
TMR2	Timer2 module Register								151*
TRISA	—	—	TRISA5	TRISA4	—(1)	TRISA2	TRISA1	TRISA0	102
TRISC	TRISC7	TRISC6	TRISC5	TRISC4	TRISC3	TRISC2	TRISC1	TRISC0	109

Legend: - = Unimplemented locations, read as '0', u = unchanged, x = unknown. Shaded cells are not used by the PWM.
* Page provides register information.
Note 1: Unimplemented, read as '1'.

20.0 CONFIGURABLE LOGIC CELL (CLC)

The Configurable Logic Cell (CLCx) provides programmable logic that operates outside the speed limitations of software execution. The logic cell takes up to 16 input signals and through the use of configurable gates reduces the 16 inputs to four logic lines that drive one of eight selectable single-output logic functions.

Input sources are a combination of the following:

- I/O pins
- Internal clocks
- Peripherals
- Register bits

The output can be directed internally to peripherals and to an output pin.

Refer to Figure 20-1 for a simplified diagram showing signal flow through the CLCx.

Possible configurations include:

- Combinatorial Logic
  - AND
  - NAND
  - AND-OR
  - AND-OR-INVERT
  - OR-XOR
  - OR-XNOR
- Latches
  - S-R
  - Clocked D with Set and Reset
  - Transparent D with Set and Reset
  - Clocked J-K with Reset

FIGURE 20-1: CLCx SIMPLIFIED BLOCK DIAGRAM

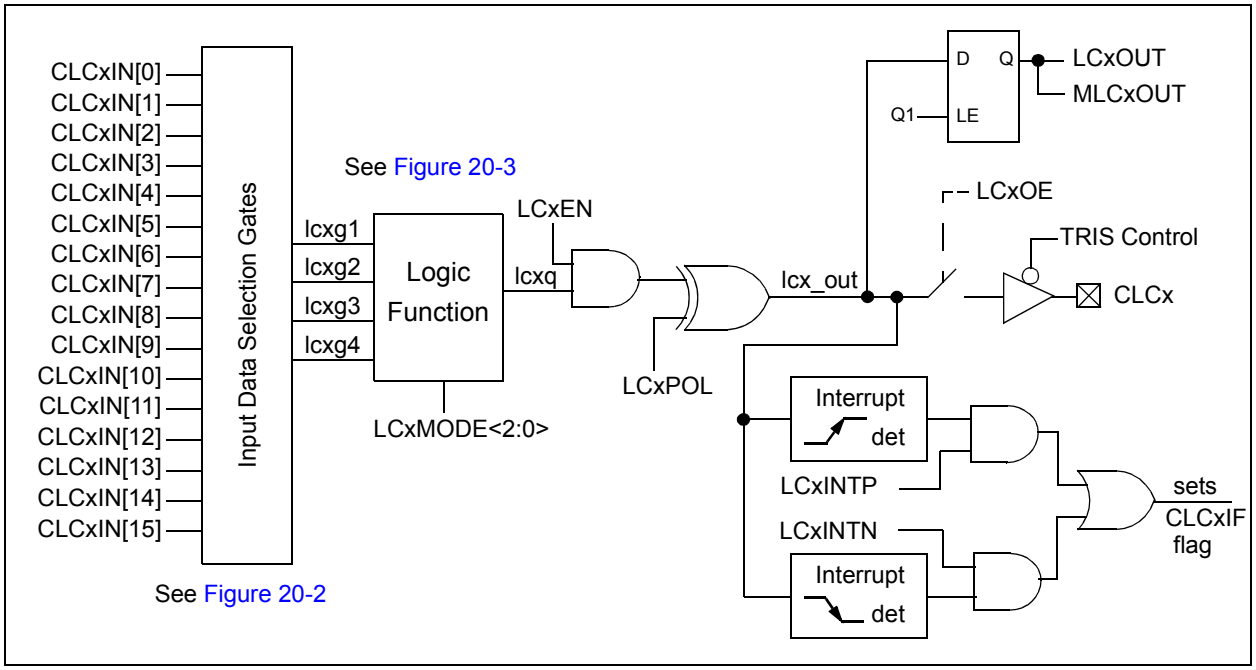

 © 2011 Microchip Technology Inc.

20.1 CLCx Setup

Programming the CLCx module is performed by configuring the 4 stages in the logic signal flow. The 4 stages are:

- Data selection
- Data gating
- Logic function selection
- Output polarity

Each stage is setup at run time by writing to the corresponding CLCx Special Function Registers. This has the added advantage of permitting logic reconfiguration on-the-fly during program execution.

20.1.1 DATA SELECTION

There are 16 signals available as inputs to the configurable logic. Four 8-input multiplexers are used to select the inputs to pass on to the next stage. The 16 inputs to the multiplexers are arranged in groups of four. Each group is available to two of the four multiplexers, in each case, paired with a different group. This arrangement makes possible selection of up to two from a group without precluding a selection from another group.

Data inputs are selected with the CLCxSEL0 and CLCxSEL1 registers (Register 20-3 and Register 20-4, respectively).

Data inputs are selected with CLCxSEL0 and CLCxSEL1 registers (Register 20-3 and Register 20-4, respectively).

Data selection is through four multiplexers as indicated on the left side of Figure 20-2. Data inputs in the figure are identified by a generic numbered input name.

Table 20-1 correlates the generic input name to the actual signal for each CLC module. The columns labeled lcxd1 through lcxd4 indicate the MUX output for the selected data input. D1S through D4S are abbreviations for the MUX select input codes: LCxD1S<2:0> through LCxD4S<2:0>, respectively. Selecting a data input in a column excludes all other inputs in that column.

Note:	Data selections are undefined at power-up.

TABLE 20-1: CLCx DATA INPUT SELECTION

Data Input	lcxd1 D1S	lcxd2 D2S	lcxd3 D3S	lcxd4 D4S	CLC 1	CLC 2
CLCxIN[0]	000	—	—	100	CLC1IN0	CLC2IN0
CLCxIN[1]	001	—	—	101	CLC1IN1	CLC2IN1
CLCxIN[2]	010	—	—	110	Reserved	Reserved
CLCxIN[3]	011	—	—	111	Reserved	Reserved
CLCxIN[4]	100	000	—	—	FOSC	FOSC
CLCxIN[5]	101	001	—	—	TMR0IF	TMR0IF
CLCxIN[6]	110	010	—	—	TMR1IF	TMR1IF
CLCxIN[7]	111	011	—	—	TMR2 = PR2	TMR2 = PR2
CLCxIN[8]	—	100	000	—	lcx1_out	lcx1_out
CLCxIN[9]	—	101	001	—	lcx2_out	lcx2_out
CLCxIN[10]	—	110	010	—	lcx3_out	lcx3_out
CLCxIN[11]	—	111	011	—	lcx4_out	lcx4_out
CLCxIN[12]	—	—	100	000	NCO1OUT	LFINTOSC
CLCxIN[13]	—	—	101	001	HFINTOSC	ADCFRC
CLCxIN[14]	—	—	110	010	PWM3OUT	PWM1OUT
CLCxIN[15]	—	—	111	011	PWM4OUT	PWM2OUT

20.1.2 DATA GATING

Outputs from the input multiplexers are directed to the desired logic function input through the data gating stage. Each data gate can direct any combination of the four selected inputs.

Note:	Data gating is undefined at power-up.

The gate stage is more than just signal direction. The gate can be configured to direct each input signal as inverted or non-inverted data. Directed signals are ANDed together in each gate. The output of each gate can be inverted before going on to the logic function stage.

The gating is in essence a 1-to-4 input AND/NAND/OR/NOR gate. When every input is inverted and the output is inverted, the gate is an OR of all enabled data inputs. When the inputs and output are not inverted, the gate is an AND or all enabled inputs.

Table 20-2 summarizes the basic logic that can be obtained in gate 1 by using the gate logic select bits. The table shows the logic of four input variables, but each gate can be configured to use less than four. If no inputs are selected, the output will be zero or one, depending on the gate output polarity bit.

TABLE 20-2: DATA GATING LOGIC

CLCxGLS0	LCxG1POL	Gate Logic
0x55	1	AND
0x55	0	NAND
0xAA	1	NOR
0xAA	0	OR
0x00	0	Logic 0
0x00	1	Logic 1

It is possible (but not recommended) to select both the true and negated values of an input. When this is done, the gate output is zero, regardless of the other inputs, but may emit logic glitches (transient-induced pulses). If the output of the channel must be zero or one, the recommended method is to set all gate bits to zero and use the gate polarity bit to set the desired level.

Data gating is configured with the logic gate select registers as follows:

- Gate 1: CLCxGLS0 (Register 20-5)
- Gate 2: CLCxGLS1 (Register 20-6)
- Gate 3: CLCxGLS2 (Register 20-7)
- Gate 4: CLCxGLS3 (Register 20-8)

Register number suffixes are different than the gate numbers because other variations of this module have multiple gate selections in the same register.

Data gating is indicated in the right side of Figure 20-2. Only one gate is shown in detail. The remaining three gates are configured identically with the exception that the data enables correspond to the enables for that gate.

20.1.3 LOGIC FUNCTION

There are 8 available logic functions including:

- AND-OR
- OR-XOR
- AND
- S-R Latch
- D Flip-Flop with Set and Reset
- D Flip-Flop with Reset
- J-K Flip-Flop with Reset
- Transparent Latch with Set and Reset

Logic functions are shown in Figure 20-3. Each logic function has four inputs and one output. The four inputs are the four data gate outputs of the previous stage. The output is fed to the inversion stage and from there to other peripherals, an output pin, and back to the CLCx itself.

20.1.4 OUTPUT POLARITY

The last stage in the configurable logic cell is the output polarity. Setting the LCxPOL bit of the CLCxCON register inverts the output signal from the logic stage. Changing the polarity while the interrupts are enabled will cause an interrupt for the resulting output transition.

 © 2011 Microchip Technology Inc.

20.1.5 CLCx SETUP STEPS

The following steps should be followed when setting up the CLCx:

- Disable CLCx by clearing the LCxEN bit.
- Select desired inputs using CLCxSEL0 and CLCxSEL1 registers (See Table 20-1).
- Clear any associated ANSEL bits.
- Set all TRIS bits associated with inputs.
- Clear all TRIS bits associated with outputs.
- Enable the chosen inputs through the four gates using CLCxGLS0, CLCxGLS1, CLCxGLS2, and CLCxGLS3 registers.
- Select the gate output polarities with the LCx-POLy bits of the CLCxPOL register.
- Select the desired logic function with the LCxMODE<2:0> bits of the CLCxCON register.
- Select the desired polarity of the logic output with the LCxPOL bit of the CLCxPOL register. (This step may be combined with the previous gate output polarity step).
- If driving the CLCx pin, set the LCxOE bit of the CLCxCON register and also clear the TRIS bit corresponding to that output.
- If interrupts are desired, configure the following bits:
  - Set the LCxINTP bit in the CLCxCON register for rising event.
  - Set the LCxINTN bit in the CLCxCON register or falling event.
  - Set the CLCxIE bit of the associated PIE registers.
  - Set the GIE and PEIE bits of the INTCON register.
- Enable the CLCx by setting the LCxEN bit of the CLCxCON register.

20.2 CLCx Interrupts

An interrupt will be generated upon a change in the output value of the CLCx when the appropriate interrupt enables are set. A rising edge detector and a falling edge detector are present in each CLC for this purpose.

The LCxIF bit of the associated PIR registers will be set when either edge detector is triggered and its associated enable bit is set. The LCxINTP enables rising edge interrupts and the LCxINTN bit enables falling edge interrupts. Both are located in the CLCxCON register.

To fully enable the interrupt, set the following bits:

- LCxON bit of the CLCxCON register
- LCxIE bit of the associated PIE registers
- LCxINTP bit of the CLCxCON register (for a rising edge detection)
- LCxINTN bit of the CLCxCON register (for a falling edge detection)
- PEIE and GIE bits of the INTCON register

The LCxIF bit of the associated PIR registers, must be cleared in software as part of the interrupt service. If another edge is detected while this flag is being cleared, the flag will still be set at the end of the sequence.

20.3 Output Mirror Copies

Mirror copies of all LCxCON output bits are contained in the CLCxDATA register. Reading this register reads the outputs of all CLCs simultaneously. This prevents any reading skew introduced by testing or reading the CLCxOUT bits in the individual CLCxCON registers.

20.4 Effects of a Reset

The CLCxCON register is cleared to zero as the result of a Reset. All other selection and gating values remain unchanged.

20.5 Operation During Sleep

The CLC module operates independently from the system clock and will continue to run during Sleep, provided that the input sources selected remain active.

The HFINTOSC remains active during Sleep when the CLC module is enabled and the HFINTOSC is selected as an input source, regardless of the system clock source selected.

In other words, if the HFINTOSC is simultaneously selected as the system clock and as a CLC input source, when the CLC is enabled, the CPU will go idle during Sleep, but the CLC will continue to operate and the HFINTOSC will remain active.

This will have a direct effect on the Sleep mode current.

FIGURE 20-2: INPUT DATA SELECTION AND GATING

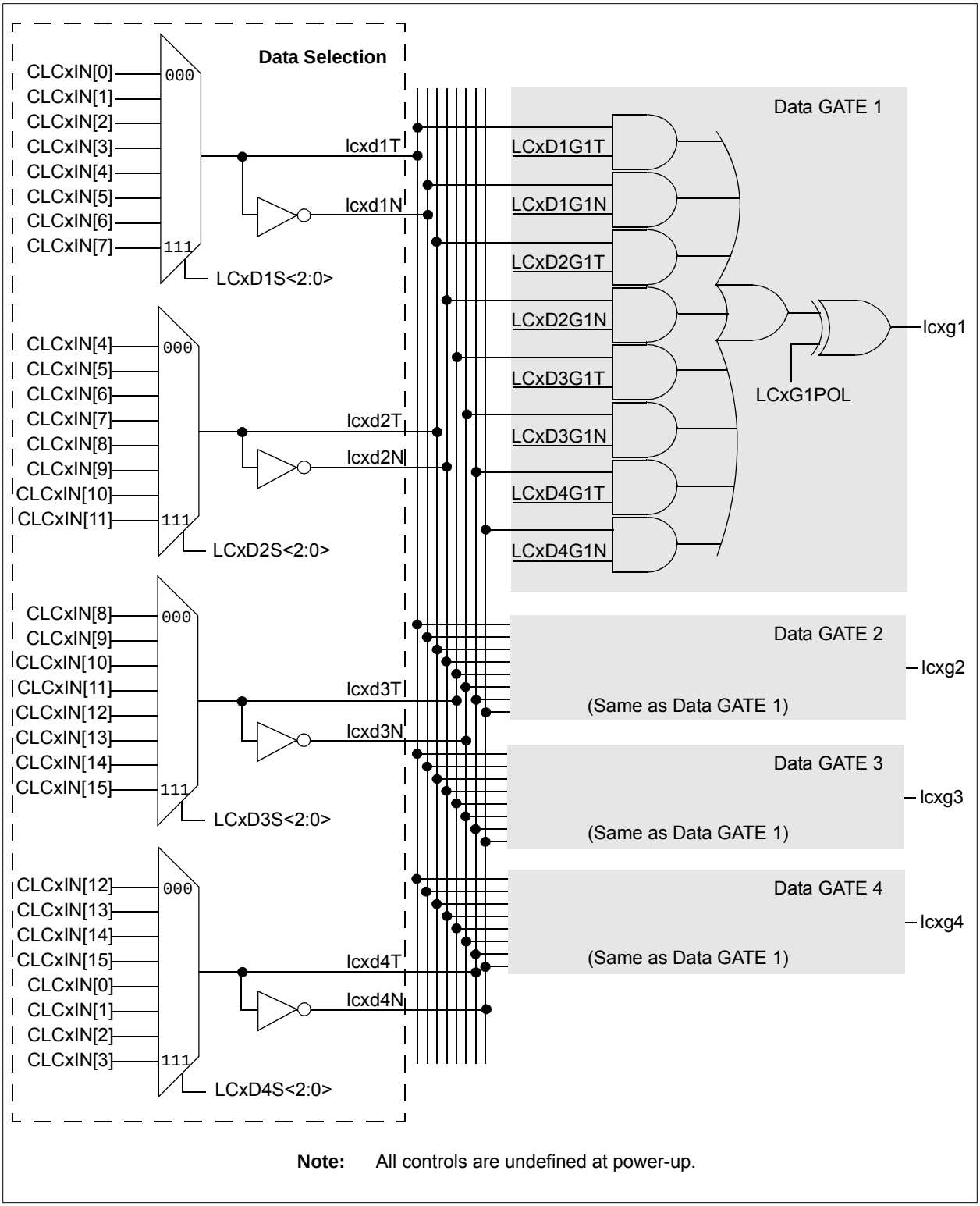

Note: All controls are undefined at power-up.

 © 2011 Microchip Technology Inc.

FIGURE 20-3: PROGRAMMABLE LOGIC FUNCTIONS

AND - OR

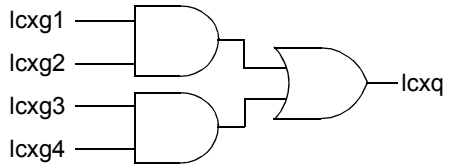

LCxMODE<2:0>= 000

OR - XOR

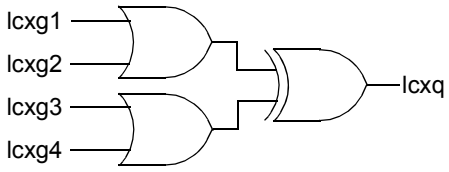

LCxMODE<2:0>= 001

4-Input AND

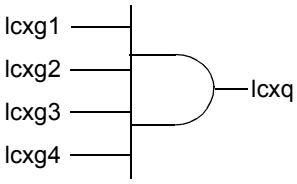

LCxMODE<2:0>= 010

S-R Latch

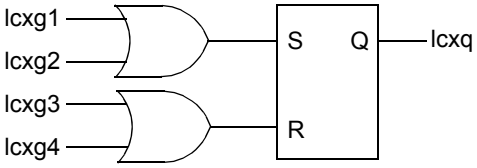

LCxMODE<2:0>= 011

1-Input D Flip-Flop with S and R

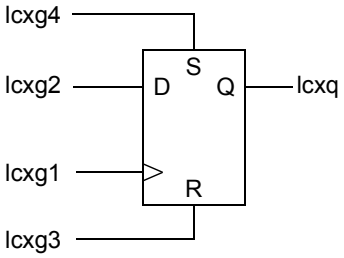

LCxMODE<2:0>= 100

2-Input D Flip-Flop with R

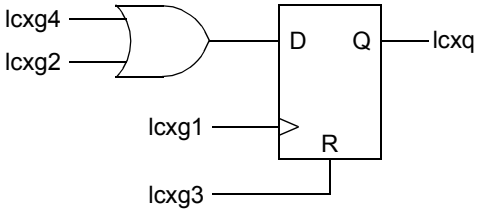

LCxMODE<2:0>= 101

J-K Flip-Flop with R

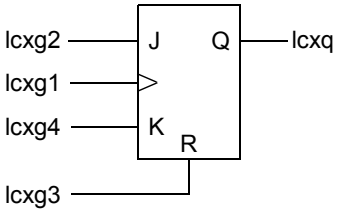

LCxMODE<2:0>= 110

1-Input Transparent Latch with S and R

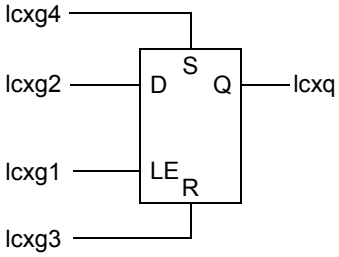

LCxMODE<2:0>= 111

20.6 CLCx Control Registers

REGISTER 20-1: CLCxCON: CONFIGURABLE LOGIC CELL CONTROL REGISTER

R/W-0/0	R/W-0/0	R-0/0	R/W-0/0	R/W-0/0	R/W-0/0	R/W-0/0	R/W-0/0
LCxEN	LCxOE	LCxOUT	LCxINTP	LCxINTN	LCxMODE<2:0>		
bit 7							bit 0

Legend:		
R = Readable bit	W = Writable bit	U = Unimplemented bit, read as ‘0’
u = Bit is unchanged	x = Bit is unknown	-n/n = Value at POR and BOR/Value at all other Resets
‘1’ = Bit is set	‘0’ = Bit is cleared	

bit 7 **LCxEN:** Configurable Logic Cell Enable bit
- 1 = Configurable logic cell is enabled and mixing input signals
- 0 = Configurable logic cell is disabled and has logic zero output

bit 6 **LCxOE:** Configurable Logic Cell Output Enable bit
- 1 = Configurable logic cell port pin output enabled
- 0 = Configurable logic cell port pin output disabled

bit 5 **LCxOUT:** Configurable Logic Cell Data Output bit

Read-only: logic cell output data, after LCxPOL; sampled from lcx_out wire.

bit 4 **LCxINTP:** Configurable Logic Cell Positive Edge Going Interrupt Enable bit
- 1 = LCxIF will be set when a rising edge occurs on lcx_out
- 0 = LCxIF will not be set

bit 3 **LCxINTN:** Configurable Logic Cell Negative Edge Going Interrupt Enable bit
- 1 = LCxIF will be set when a falling edge occurs on lcx_out
- 0 = LCxIF will not be set

bit 2-0 **LCxMODE<2:0>:** Configurable Logic Cell Functional Mode bits
- 111 = Cell is 1-input transparent latch with S and R
- 110 = Cell is J-K Flip-Flop with R
- 101 = Cell is 2-input D Flip-Flop with R
- 100 = Cell is 1-input D Flip-Flop with S and R
- 011 = Cell is S-R latch
- 010 = Cell is 4-input AND
- 001 = Cell is OR-XOR
- 000 = Cell is AND-OR

 © 2011 Microchip Technology Inc.

REGISTER 20-2: CLCxPOL: SIGNAL POLARITY CONTROL REGISTER

R/W-0/0	U-0	U-0	U-0	R/W-x/u	R/W-x/u	R/W-x/u	R/W-x/u
LCxPOL	—	—	—	LCxG4POL	LCxG3POL	LCxG2POL	LCxG1POL
bit 7							bit 0

Legend:		
R = Readable bit	W = Writable bit	U = Unimplemented bit, read as ‘0’
u = Bit is unchanged	x = Bit is unknown	-n/n = Value at POR and BOR/Value at all other Resets
‘1’ = Bit is set	‘0’ = Bit is cleared	

bit 7 **LCxPOL:** LCOUT Polarity Control bit
1 = The output of the logic cell is inverted
0 = The output of the logic cell is not inverted

bit 6-4 **Unimplemented:** Read as ‘0’

bit 3 **LCxG4POL:** Gate 4 Output Polarity Control bit
1 = The output of gate 4 is inverted when applied to the logic cell
0 = The output of gate 4 is not inverted

bit 2 **LCxG3POL:** Gate 3 Output Polarity Control bit
1 = The output of gate 3 is inverted when applied to the logic cell
0 = The output of gate 3 is not inverted

bit 1 **LCxG2POL:** Gate 2 Output Polarity Control bit
1 = The output of gate 2 is inverted when applied to the logic cell
0 = The output of gate 2 is not inverted

bit 0 **LCxG1POL:** Gate 1 Output Polarity Control bit
1 = The output of gate 1 is inverted when applied to the logic cell
0 = The output of gate 1 is not inverted

REGISTER 20-3: CLCxSEL0: MULTIPLEXER DATA 1 AND 2 SELECT REGISTER

U-0	R/W-x/u	R/W-x/u	R/W-x/u	U-0	R/W-x/u	R/W-x/u	R/W-x/u
—	LCxD2S<2:0>			—	LCxD1S<2:0>		
bit 7							bit 0

Legend:		
R = Readable bit	W = Writable bit	U = Unimplemented bit, read as '0'
u = Bit is unchanged	x = Bit is unknown	-n/n = Value at POR and BOR/Value at all other Resets
'1' = Bit is set	'0' = Bit is cleared	

bit 7 **Unimplemented:** Read as '0'

bit 6-4 **LCxD2S<2:0>:** Input Data 2 Selection Control bits(1)

111 = CLCxIN[11] is selected for lcxd2
110 = CLCxIN[10] is selected for lcxd2
101 = CLCxIN[9] is selected for lcxd2
100 = CLCxIN[8] is selected for lcxd2
011 = CLCxIN[7] is selected for lcxd2
010 = CLCxIN[6] is selected for lcxd2
001 = CLCxIN[5] is selected for lcxd2
000 = CLCxIN[4] is selected for lcxd2

bit 3 **Unimplemented:** Read as '0'

bit 2-0 **LCxD1S<2:0>:** Input Data 1 Selection Control bits(1)

111 = CLCxIN[7] is selected for lcxd1
110 = CLCxIN[6] is selected for lcxd1
101 = CLCxIN[5] is selected for lcxd1
100 = CLCxIN[4] is selected for lcxd1
011 = CLCxIN[3] is selected for lcxd1
010 = CLCxIN[2] is selected for lcxd1
001 = CLCxIN[1] is selected for lcxd1
000 = CLCxIN[0] is selected for lcxd1

Note 1: See Table 20-1 for signal names associated with inputs.

 © 2011 Microchip Technology Inc.

REGISTER 20-4: CLCxSEL1: MULTIPLEXER DATA 3 AND 4 SELECT REGISTER

U-0	R/W-x/u	R/W-x/u	R/W-x/u	U-0	R/W-x/u	R/W-x/u	R/W-x/u
—	LCxD4S<2:0>			—	LCxD3S<2:0>		
bit 7							bit 0

Legend:		
R = Readable bit	W = Writable bit	U = Unimplemented bit, read as ‘0’
u = Bit is unchanged	x = Bit is unknown	-n/n = Value at POR and BOR/Value at all other Resets
‘1’ = Bit is set	‘0’ = Bit is cleared	

bit 7 **Unimplemented:** Read as ‘0’

bit 6-4 **LCxD4S<2:0>:** Input Data 4 Selection Control bits(1)

111 = CLCxIN[3] is selected for lcxd4
110 = CLCxIN[2] is selected for lcxd4
101 = CLCxIN[1] is selected for lcxd4
100 = CLCxIN[0] is selected for lcxd4
011 = CLCxIN[15] is selected for lcxd4
010 = CLCxIN[14] is selected for lcxd4
001 = CLCxIN[13] is selected for lcxd4
000 = CLCxIN[12] is selected for lcxd4

bit 3 **Unimplemented:** Read as ‘0’

bit 2-0 **LCxD3S<2:0>:** Input Data 3 Selection Control bits(1)

111 = CLCxIN[15] is selected for lcxd3
110 = CLCxIN[14] is selected for lcxd3
101 = CLCxIN[13] is selected for lcxd3
100 = CLCxIN[12] is selected for lcxd3
011 = CLCxIN[11] is selected for lcxd3
010 = CLCxIN[10] is selected for lcxd3
001 = CLCxIN[9] is selected for lcxd3
000 = CLCxIN[8] is selected for lcxd3

Note 1: See Table 20-1 for signal names associated with inputs.

REGISTER 20-5: CLCxGLS0: GATE 1 LOGIC SELECT REGISTER

R/W-x/u	R/W-x/u	R/W-x/u	R/W-x/u	R/W-x/u	R/W-x/u	R/W-x/u	R/W-x/u
LCxG1D4T	LCxG1D4N	LCxG1D3T	LCxG1D3N	LCxG1D2T	LCxG1D2N	LCxG1D1T	LCxG1D1N
bit 7							bit 0

Legend:		
R = Readable bit	W = Writable bit	U = Unimplemented bit, read as '0'
u = Bit is unchanged	x = Bit is unknown	-n/n = Value at POR and BOR/Value at all other Resets
'1' = Bit is set	'0' = Bit is cleared	

bit 7 **LCxG1D4T:** Gate 1 Data 4 True (non-inverted) bit
1 = lcxd4T is gated into lcxg1
0 = lcxd4T is not gated into lcxg1

bit 6 **LCxG1D4N:** Gate 1 Data 4 Negated (inverted) bit
1 = lcxd4N is gated into lcxg1
0 = lcxd4N is not gated into lcxg1

bit 5 **LCxG1D3T:** Gate 1 Data 3 True (non-inverted) bit
1 = lcxd3T is gated into lcxg1
0 = lcxd3T is not gated into lcxg1

bit 4 **LCxG1D3N:** Gate 1 Data 3 Negated (inverted) bit
1 = lcxd3N is gated into lcxg1
0 = lcxd3N is not gated into lcxg1

bit 3 **LCxG1D2T:** Gate 1 Data 2 True (non-inverted) bit
1 = lcxd2T is gated into lcxg1
0 = lcxd2T is not gated into lcxg1

bit 2 **LCxG1D2N:** Gate 1 Data 2 Negated (inverted) bit
1 = lcxd2N is gated into lcxg1
0 = lcxd2N is not gated into lcxg1

bit 1 **LCxG1D1T:** Gate 1 Data 1 True (non-inverted) bit
1 = lcxd1T is gated into lcxg1
0 = lcxd1T is not gated into lcxg1

bit 0 **LCxG1D1N:** Gate 1 Data 1 Negated (inverted) bit
1 = lcxd1N is gated into lcxg1
0 = lcxd1N is not gated into lcxg1

 © 2011 Microchip Technology Inc.

REGISTER 20-6: CLCxGLS1: GATE 2 LOGIC SELECT REGISTER

R/W-x/u	R/W-x/u	R/W-x/u	R/W-x/u	R/W-x/u	R/W-x/u	R/W-x/u	R/W-x/u
LCxG2D4T	LCxG2D4N	LCxG2D3T	LCxG2D3N	LCxG2D2T	LCxG2D2N	LCxG2D1T	LCxG2D1N
bit 7							bit 0

Legend:		
R = Readable bit	W = Writable bit	U = Unimplemented bit, read as ‘0’
u = Bit is unchanged	x = Bit is unknown	-n/n = Value at POR and BOR/Value at all other Resets
‘1’ = Bit is set	‘0’ = Bit is cleared	

bit 7 **LCxG2D4T:** Gate 2 Data 4 True (non-inverted) bit
1 = lcxd4T is gated into lcxg2
0 = lcxd4T is not gated into lcxg2

bit 6 **LCxG2D4N:** Gate 2 Data 4 Negated (inverted) bit
1 = lcxd4N is gated into lcxg2
0 = lcxd4N is not gated into lcxg2

bit 5 **LCxG2D3T:** Gate 2 Data 3 True (non-inverted) bit
1 = lcxd3T is gated into lcxg2
0 = lcxd3T is not gated into lcxg2

bit 4 **LCxG2D3N:** Gate 2 Data 3 Negated (inverted) bit
1 = lcxd3N is gated into lcxg2
0 = lcxd3N is not gated into lcxg2

bit 3 **LCxG2D2T:** Gate 2 Data 2 True (non-inverted) bit
1 = lcxd2T is gated into lcxg2
0 = lcxd2T is not gated into lcxg2

bit 2 **LCxG2D2N:** Gate 2 Data 2 Negated (inverted) bit
1 = lcxd2N is gated into lcxg2
0 = lcxd2N is not gated into lcxg2

bit 1 **LCxG2D1T:** Gate 2 Data 1 True (non-inverted) bit
1 = lcxd1T is gated into lcxg2
0 = lcxd1T is not gated into lcxg2

bit 0 **LCxG2D1N:** Gate 2 Data 1 Negated (inverted) bit
1 = lcxd1N is gated into lcxg2
0 = lcxd1N is not gated into lcxg2

REGISTER 20-7: CLCxGLS2: GATE 3 LOGIC SELECT REGISTER

R/W-x/u	R/W-x/u	R/W-x/u	R/W-x/u	R/W-x/u	R/W-x/u	R/W-x/u	R/W-x/u
LCxG3D4T	LCxG3D4N	LCxG3D3T	LCxG3D3N	LCxG3D2T	LCxG3D2N	LCxG3D1T	LCxG3D1N
bit 7							bit 0

Legend:		
R = Readable bit	W = Writable bit	U = Unimplemented bit, read as '0'
u = Bit is unchanged	x = Bit is unknown	-n/n = Value at POR and BOR/Value at all other Resets
'1' = Bit is set	'0' = Bit is cleared	

bit 7 **LCxG3D4T:** Gate 3 Data 4 True (non-inverted) bit
1 = lcxd4T is gated into lcxg3
0 = lcxd4T is not gated into lcxg3

bit 6 **LCxG3D4N:** Gate 3 Data 4 Negated (inverted) bit
1 = lcxd4N is gated into lcxg3
0 = lcxd4N is not gated into lcxg3

bit 5 **LCxG3D3T:** Gate 3 Data 3 True (non-inverted) bit
1 = lcxd3T is gated into lcxg3
0 = lcxd3T is not gated into lcxg3

bit 4 **LCxG3D3N:** Gate 3 Data 3 Negated (inverted) bit
1 = lcxd3N is gated into lcxg3
0 = lcxd3N is not gated into lcxg3

bit 3 **LCxG3D2T:** Gate 3 Data 2 True (non-inverted) bit
1 = lcxd2T is gated into lcxg3
0 = lcxd2T is not gated into lcxg3

bit 2 **LCxG3D2N:** Gate 3 Data 2 Negated (inverted) bit
1 = lcxd2N is gated into lcxg3
0 = lcxd2N is not gated into lcxg3

bit 1 **LCxG3D1T:** Gate 3 Data 1 True (non-inverted) bit
1 = lcxd1T is gated into lcxg3
0 = lcxd1T is not gated into lcxg3

bit 0 **LCxG3D1N:** Gate 3 Data 1 Negated (inverted) bit
1 = lcxd1N is gated into lcxg3
0 = lcxd1N is not gated into lcxg3

 © 2011 Microchip Technology Inc.

REGISTER 20-8: CLCxGLS3: GATE 4 LOGIC SELECT REGISTER

R/W-x/u	R/W-x/u	R/W-x/u	R/W-x/u	R/W-x/u	R/W-x/u	R/W-x/u	R/W-x/u
LCxG4D4T	LCxG4D4N	LCxG4D3T	LCxG4D3N	LCxG4D2T	LCxG4D2N	LCxG4D1T	LCxG4D1N
bit 7							bit 0

Legend:		
R = Readable bit	W = Writable bit	U = Unimplemented bit, read as ‘0’
u = Bit is unchanged	x = Bit is unknown	-n/n = Value at POR and BOR/Value at all other Resets
‘1’ = Bit is set	‘0’ = Bit is cleared	

bit 7 **LCxG4D4T:** Gate 4 Data 4 True (non-inverted) bit
1 = lcxd4T is gated into lcxg4
0 = lcxd4T is not gated into lcxg4

bit 6 **LCxG4D4N:** Gate 4 Data 4 Negated (inverted) bit
1 = lcxd4N is gated into lcxg4
0 = lcxd4N is not gated into lcxg4

bit 5 **LCxG4D3T:** Gate 4 Data 3 True (non-inverted) bit
1 = lcxd3T is gated into lcxg4
0 = lcxd3T is not gated into lcxg4

bit 4 **LCxG4D3N:** Gate 4 Data 3 Negated (inverted) bit
1 = lcxd3N is gated into lcxg4
0 = lcxd3N is not gated into lcxg4

bit 3 **LCxG4D2T:** Gate 4 Data 2 True (non-inverted) bit
1 = lcxd2T is gated into lcxg4
0 = lcxd2T is not gated into lcxg4

bit 2 **LCxG4D2N:** Gate 4 Data 2 Negated (inverted) bit
1 = lcxd2N is gated into lcxg4
0 = lcxd2N is not gated into lcxg4

bit 1 **LCxG4D1T:** Gate 4 Data 1 True (non-inverted) bit
1 = lcxd1T is gated into lcxg4
0 = lcxd1T is not gated into lcxg4

bit 0 **LCxG4D1N:** Gate 4 Data 1 Negated (inverted) bit
1 = lcxd1N is gated into lcxg4
0 = lcxd1N is not gated into lcxg4

REGISTER 20-9: CLCDATA: CLC DATA OUTPUT

U-0	U-0	U-0	U-0	U-0	U-0	R-0	R-0
—	—	—	—	—	—	MLC2OUT	MLC1OUT
bit 7							bit 0

Legend:		
R = Readable bit	W = Writable bit	U = Unimplemented bit, read as ‘0’
u = Bit is unchanged	x = Bit is unknown	-n/n = Value at POR and BOR/Value at all other Resets
‘1’ = Bit is set	‘0’ = Bit is cleared	

bit 7-2 **Unimplemented**: Read as ‘0’

bit 1 **MLC2OUT**: Mirror copy of LC2OUT bit

bit 0 **MLC1OUT**: Mirror copy of LC1OUT bit

 © 2011 Microchip Technology Inc.

TABLE 20-3: SUMMARY OF REGISTERS ASSOCIATED WITH CLCx

Name	Bit7	Bit6	Bit5	Bit4	BIt3	Bit2	Bit1	Bit0	Register on Page
ANSELB	—	—	ANSB5	ANSB4	—	—	—	—	107
ANSELC	ANSC7	ANSC6	—	—	ANSC3	ANSC2	ANSC1	ANSC0	110
CLC1CON	LC1EN	LC1OE	LC1OUT	LC1INTP	LC1INTN	LC1MODE<2:0>			167
CLC2CON	LC2EN	LC2OE	LC2OUT	LC2INTP	LC2INTN	LC2MODE<2:0>			167
CLCDATA	—	—	—	—	—	—	MLC2OUT	MLC1OUT	171
CLC1GLS0	LC1G1D4T	LC1G1D4N	LC1G1D3T	LC1G1D3N	LC1G1D2T	LC1G1D2N	LC1G1D1T	LC1G1D1N	171
CLC1GLS1	LC1G2D4T	LC1G2D4N	LC1G2D3T	LC1G2D3N	LC1G2D2T	LC1G2D2N	LC1G2D1T	LC1G2D1N	172
CLC1GLS2	LC1G3D4T	LC1G3D4N	LC1G3D3T	LC1G3D3N	LC1G3D2T	LC1G3D2N	LC1G3D1T	LC1G3D1N	173
CLC1GLS3	LC1G4D4T	LC1G4D4N	LC1G4D3T	LC1G4D3N	LC1G4D2T	LC1G4D2N	LC1G4D1T	LC1G4D1N	174
CLC1POL	LC1POL	—	—	—	LC1G4POL	LC1G3POL	LC1G2POL	LC1G1POL	168
CLC1SEL0	—	LC1D2S<2:0>			—	LC1D1S<2:0>			169
CLC1SEL1	—	LC1D4S<2:0>			—	LC1D3S<2:0>			170
CLC2GLS0	LC2G1D4T	LC2G1D4N	LC2G1D3T	LC2G1D3N	LC2G1D2T	LC2G1D2N	LC2G1D1T	LC2G1D1N	171
CLC2GLS1	LC2G2D4T	LC2G2D4N	LC2G2D3T	LC2G2D3N	LC2G2D2T	LC2G2D2N	LC2G2D1T	LC2G2D1N	172
CLC2GLS2	LC2G3D4T	LC2G3D4N	LC2G3D3T	LC2G3D3N	LC2G3D2T	LC2G3D2N	LC2G3D1T	LC2G3D1N	173
CLC2GLS3	LC2G4D4T	LC2G4D4N	LC2G4D3T	LC2G4D3N	LC2G4D2T	LC2G4D2N	LC2G4D1T	LC2G4D1N	174
CLC2POL	LC2POL	—	—	—	LC2G4POL	LC2G3POL	LC2G2POL	LC2G1POL	168
CLC2SEL0	—	LC2D2S<2:0>			—	LC2D1S<2:0>			169
CLC2SEL1	—	LC2D4S<2:0>			—	LC2D3S<2:0>			170
INTCON	GIE	PEIE	TMR0IE	INTE	IOCIE	TMR0IF	INTF	IOCIF	66
PIE3	—	—	—	—	—	—	CLC2IE	CLC1IE	69
PIR3	—	—	—	—	—	—	CLC2IF	CLC1IF	72
TRISA	—	—	TRISA5	TRISA4	—(1)	TRISA2	TRISA1	TRISA0	102
TRISB	TRISB7	TRISB6	TRISB5	TRISB4	—	—	—	—	106
TRISC	TRISC7	TRISC6	TRISC5	TRISC4	TRISC3	TRISC2	TRISC1	TRISC0	109

Legend: — = unimplemented read as '0',. Shaded cells are not used for CLC module.
Note 1: Unimplemented, read as '1'.

21.0 NUMERICALLY CONTROLLED OSCILLATOR (NCO) MODULE

The Numerically Controlled Oscillator (NCOx) module is a timer that uses the overflow from the addition of an increment value to divide the input frequency. The advantage of the addition method over simple counter driven timer is that the resolution of division does not vary with the divider value. The NCOx is most useful for applications that require frequency accuracy and fine resolution at a fixed duty cycle.

Features of the NCOx include:

- 16-bit increment function
- Fixed Duty Cycle (FDC) mode
- Pulse Frequency (PF) mode
- Output pulse width control
- Multiple clock input sources
- Output polarity control
- Interrupt capability

Figure 21-1 is a simplified block diagram of the NCOx module.

 © 2011 Microchip Technology Inc.

FIGURE 21-1: NUMERICALLY CONTROLLED OSCILLATOR (NCOx) MODULE SIMPLIFIED BLOCK DIAGRAM

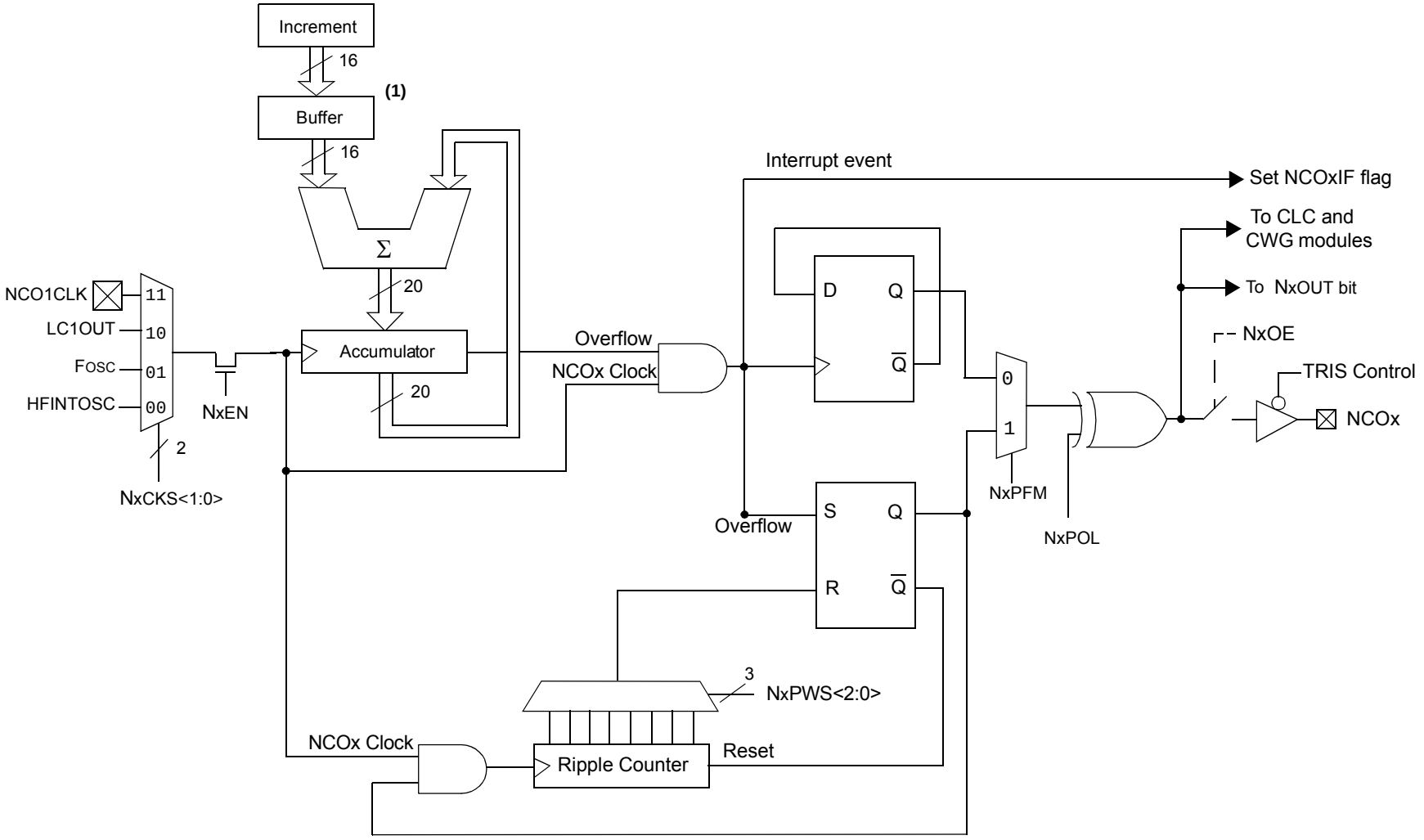

Note 1: The increment registers are double-buffered to allow for value changes to be made without first disabling the NCOx module. They are shown here for reference. The buffers are not user-accessible.

Preliminary

© 2011 Microchip Technology Inc.

21.1 NCOx OPERATION

The NCOx operates by repeatedly adding a fixed value to an accumulator. Additions occur at the input clock rate. The accumulator will overflow with a carry periodically, which is the raw NCOx output. This effectively reduces the input clock by the ratio of the addition value to the maximum accumulator value. See Equation 21-1.

The NCOx output can be further modified by stretching the pulse or toggling a flip-flop. The modified NCOx output is then distributed internally to other peripherals and optionally output to a pin. The accumulator overflow also generates an interrupt.

The NCOx period changes in discrete steps to create an average frequency. This output depends on the ability of the receiving circuit (i.e., CWG or external resonant converter circuitry) to average the NCOx output to reduce uncertainty.

21.1.1 NCOx CLOCK SOURCES

Clock sources available to the NCOx include:

- HFINTOSC
- FOSC
- LCxOUT
- CLKIN pin

The NCOx clock source is selected by configuring the NxCKS<2:0> bits in the NCOxCLK register.

21.1.2 ACCUMULATOR

The accumulator is a 20-bit register. Read and write access to the Accumulator is available through three registers:

- NCOxACCL
- NCOxACCH
- NCOxACCU

21.1.3 ADDER

The NCOx Adder is a full adder, which operates independently from the system clock. The addition of the previous result and the increment value replaces the accumulator value on the rising edge of each input clock.

21.1.4 INCREMENT REGISTERS

The Increment value is stored in two 8-bit registers making up a 16-bit increment. In order of LSB to MSB they are:

- NCOxINCL
- NCOxINCH

Both of the registers are readable and writeable. The Increment registers are double-buffered to allow for value changes to be made without first disabling the NCOx module.

The buffer loads are immediate when the module is disabled. Writing to the NCOxINCH register first is necessary because then the buffer is loaded synchronously with the NCOx operation after the write is executed on the NCOxINCL register.

Note:	The increment buffer registers are not user-accessible.

EQUATION 21-1:

$$F_{OVERFLOW} = \frac{NCO\ Clock\ Frequency \times Increment\ Value}{2^n}$$

n = Accumulator width in bits

 © 2011 Microchip Technology Inc.

21.2 FIXED DUTY CYCLE (FDC) MODE

In Fixed Duty Cycle (FDC) mode, every time the accumulator overflows, the output is toggled. This provides a 50% duty cycle, provided that the increment value remains constant. For more information, see Figure 21-2.

The FDC mode is selected by clearing the NxPFM bit in the NCOxCON register.

21.3 PULSE FREQUENCY (PF) MODE

In Pulse Frequency (PF) mode, every time the accumulator overflows, the output becomes active for one or more clock periods. Once the clock period expires, the output returns to an inactive state. This provides a pulsed output.

The output becomes active on the rising clock edge immediately following the overflow event. For more information, see Figure 21-2.

The value of the active and inactive states depends on the polarity bit, NxPOL in the NCOxCON register.

The PF mode is selected by setting the NxPFM bit in the NCOxCON register.

21.3.1 OUTPUT PULSE WIDTH CONTROL

When operating in PF mode, the active state of the output can vary in width by multiple clock periods. Various pulse widths are selected with the NxPWS<2:0> bits in the NCOxCLK register.

When the selected pulse width is greater than the accumulator overflow time frame, the output of the NCOx operation is indeterminate.

21.4 OUTPUT POLARITY CONTROL

The last stage in the NCOx module is the output polarity. The NxPOL bit in the NCOxCON register selects the output polarity. Changing the polarity while the interrupts are enabled will cause an interrupt for the resulting output transition.

The NCOx output can be used internally by source code or other peripherals. Accomplish this by reading the NxOUT (read-only) bit of the NCOxCON register.

FIGURE 21-2: FDC OUTPUT MODE OPERATION DIAGRAM

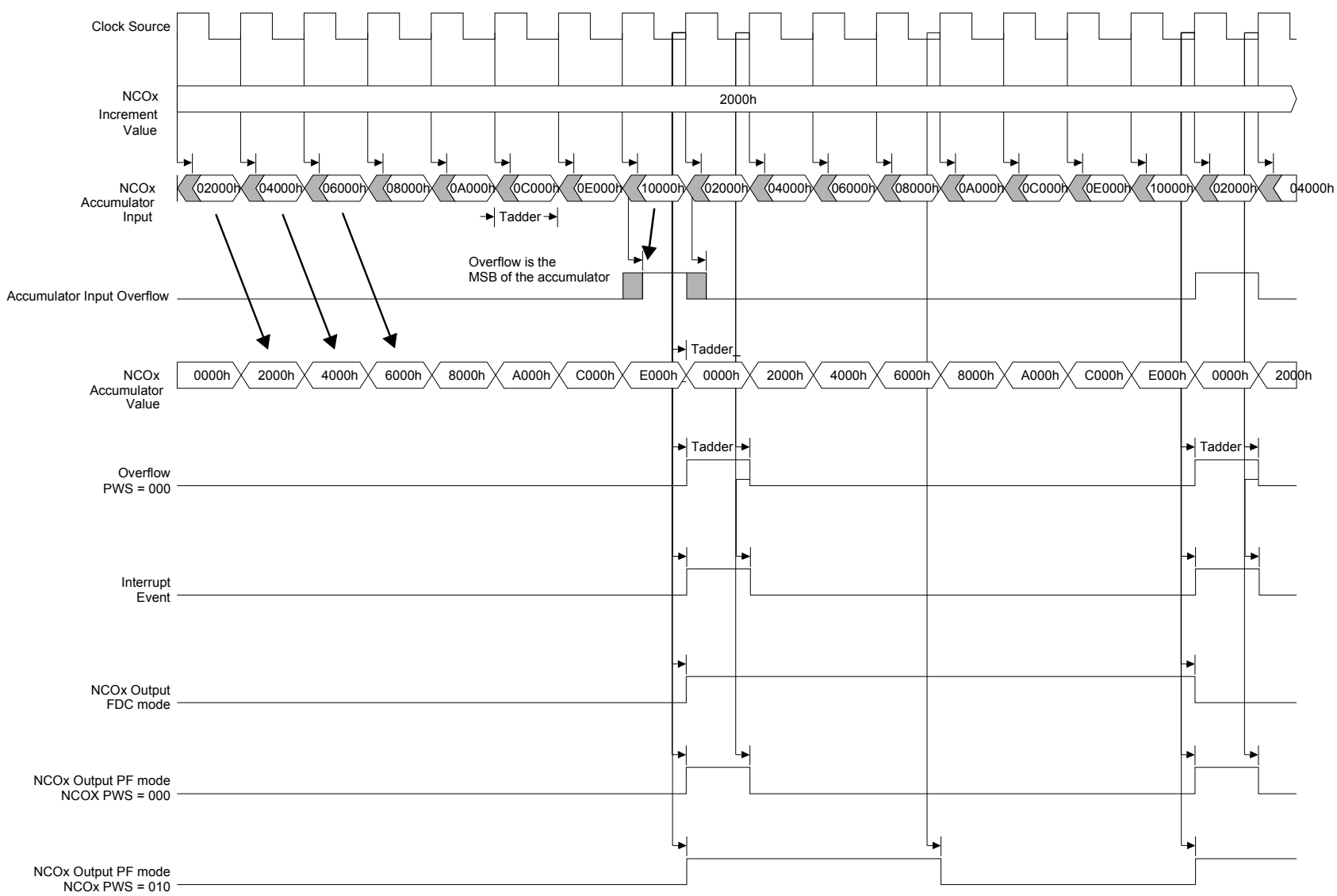

Preliminary
© 2011 Microchip Technology Inc.

21.5 Interrupts

When the accumulator overflows, the NCOx Interrupt Flag bit, NCOxIF, of the PIRx register is set. To enable the interrupt event, the following bits must be set:

- NxEN bit of the NCOxCON register
- NCOxIE bit of the PIEx register
- PEIE bit of the INTCON register
- GIE bit of the INTCON register

The interrupt must be cleared by software by clearing the NCOxIF bit in the Interrupt Service Routine.

21.6 Effects of a Reset

All of the NCOx registers are cleared to zero as the result of a Reset.

21.7 Operation In Sleep

The NCO module operates independently from the system clock and will continue to run during Sleep, provided that the clock source selected remains active.

The HFINTOSC remains active during Sleep when the NCO module is enabled and the HFINTOSC is selected as the clock source, regardless of the system clock source selected.

In other words, if the HFINTOSC is simultaneously selected as the system clock and the NCO clock source, when the NCO is enabled, the CPU will go idle during Sleep, but the NCO will continue to operate and the HFINTOSC will remain active.

This will have a direct effect on the Sleep mode current.

21.8 Alternate Pin Locations

This module incorporates I/O pins that can be moved to other locations with the use of the alternate pin function register, APFCON. To determine which pins can be moved and what their default locations are upon a Reset, see **Section 11.1 "Alternate Pin Function"** for more information.

21.9 NCOx Control Registers

REGISTER 21-1: NCOxCON: NCOx CONTROL REGISTER

R/W-0/0	R/W-0/0	R-0/0	R/W-0/0	U-0	U-0	U-0	R/W-0/0
NxEN	NxOE	NxOUT	NxPOL	—	—	—	NxPFM
bit 7							bit 0

Legend:		
R = Readable bit	W = Writable bit	U = Unimplemented bit, read as ‘0’
u = Bit is unchanged	x = Bit is unknown	-n/n = Value at POR and BOR/Value at all other Resets
‘1’ = Bit is set	‘0’ = Bit is cleared	

bit 7 **NxEN:** NCOx Enable bit
1 = NCOx module is enabled
0 = NCOx module is disabled

bit 6 **NxOE:** NCOx Output Enable bit
1 = NCOx output pin is enabled
0 = NCOx output pin is disabled

bit 5 **NxOUT:** NCOx Output bit
1 = NCOx output is high
0 = NCOx output is low

bit 4 **NxPOL:** NCOx Polarity bit
1 = NCOx output signal is active high
0 = NCOx output signal is active low

bit 3-1 **Unimplemented**: Read as ‘0’.

bit 0 **NxPFM:** NCOx Pulse Frequency Mode bit
1 = NCOx operates in Pulse Frequency mode
0 = NCOx operates in Fixed Duty Cycle mode

REGISTER 21-2: NCOxCLK: NCOx INPUT CLOCK CONTROL REGISTER

R/W-0/0	R/W-0/0	R/W-0/0	U-0	U-0	U-0	R/W-0/0	R/W-0/0
NxPWS<2:0>			—	—	—	NxCKS<1:0>	
bit 7							bit 0

Legend:		
R = Readable bit	W = Writable bit	U = Unimplemented bit, read as ‘0’
u = Bit is unchanged	x = Bit is unknown	-n/n = Value at POR and BOR/Value at all other Resets
‘1’ = Bit is set	‘0’ = Bit is cleared	

bit 7-5 **NxPWS<2:0>:** NCOx Output Pulse Width Select bits(1, 2)
111 = 128 NCOx clock periods
110 = 64 NCOx clock periods
101 = 32 NCOx clock periods
100 = 16 NCOx clock periods
011 = 8 NCOx clock periods
010 = 4 NCOx clock periods
001 = 2 NCOx clock periods
000 = 1 NCOx clock periods

bit 4-2 **Unimplemented:** Read as ‘0’

bit 1-0 **NxCKS<1:0>:** NCOx Clock Source Select bits
11 = NCO1CLK
10 = LC1OUT
01 = FOSC
00 = HFINTOSC (16 MHz)

Note 1: NxPWS applies only when operating in Pulse Frequency mode.
2: If NCOx pulse width is greater than NCOx overflow period, operation is undeterminate.

© 2011 Microchip Technology Inc.

REGISTER 21-3: NCOxACCL: NCOx ACCUMULATOR REGISTER – LOW BYTE

R/W-0/0	R/W-0/0	R/W-0/0	R/W-0/0	R/W-0/0	R/W-0/0	R/W-0/0	R/W-0/0
NCOxACC<7:0>							
bit 7							bit 0

Legend:		
R = Readable bit	W = Writable bit	U = Unimplemented bit, read as ‘0’
u = Bit is unchanged	x = Bit is unknown	-n/n = Value at POR and BOR/Value at all other Resets
‘1’ = Bit is set	‘0’ = Bit is cleared	

bit 7-0 **NCOxACC<7:0>:** NCOx Accumulator, low byte

REGISTER 21-4: NCOxACCH: NCOx ACCUMULATOR REGISTER – HIGH BYTE

R/W-0/0	R/W-0/0	R/W-0/0	R/W-0/0	R/W-0/0	R/W-0/0	R/W-0/0	R/W-0/0
NCOxACC<15:8>							
bit 7							bit 0

Legend:		
R = Readable bit	W = Writable bit	U = Unimplemented bit, read as ‘0’
u = Bit is unchanged	x = Bit is unknown	-n/n = Value at POR and BOR/Value at all other Resets
‘1’ = Bit is set	‘0’ = Bit is cleared	

bit 7-0 **NCOxACC<15:8>:** NCOx Accumulator, high byte

REGISTER 21-5: NCOxACCU: NCOx ACCUMULATOR REGISTER – UPPER BYTE

U-0	U-0	U-0	U-0	R/W-0/0	R/W-0/0	R/W-0/0	R/W-0/0
—	—	—	—	NCOxACC<19:16>			
bit 7							bit 0

Legend:		
R = Readable bit	W = Writable bit	U = Unimplemented bit, read as ‘0’
u = Bit is unchanged	x = Bit is unknown	-n/n = Value at POR and BOR/Value at all other Resets
‘1’ = Bit is set	‘0’ = Bit is cleared	

bit 7-4 **Unimplemented:** Read as ‘0’

bit 3-0 **NCOxACC<19:16>:** NCOx Accumulator, upper byte

REGISTER 21-6: NCOxINCL: NCOx INCREMENT REGISTER – LOW BYTE

R/W-0/0	R/W-0/0	R/W-0/0	R/W-0/0	R/W-0/0	R/W-0/0	R/W-0/0	R/W-1/1
NCOxINC<7:0>							
bit 7							bit 0

Legend:		
R = Readable bit	W = Writable bit	U = Unimplemented bit, read as ‘0’
u = Bit is unchanged	x = Bit is unknown	-n/n = Value at POR and BOR/Value at all other Resets
‘1’ = Bit is set	‘0’ = Bit is cleared	

bit 7-0 **NCOxINC<7:0>:** NCOx Increment, low byte

REGISTER 21-7: NCOxINCH: NCOx INCREMENT REGISTER – HIGH BYTE

R/W-0/0	R/W-0/0	R/W-0/0	R/W-0/0	R/W-0/0	R/W-0/0	R/W-0/0	R/W-0/0
NCOxINC<15:8>							
bit 7							bit 0

Legend:		
R = Readable bit	W = Writable bit	U = Unimplemented bit, read as ‘0’
u = Bit is unchanged	x = Bit is unknown	-n/n = Value at POR and BOR/Value at all other Resets
‘1’ = Bit is set	‘0’ = Bit is cleared	

bit 7-0 **NCOxINC<15:8>:** NCOx Increment, high byte

 © 2011 Microchip Technology Inc.

TABLE 21-1: SUMMARY OF REGISTERS ASSOCIATED WITH NCOx

Name	Bit 7	Bit 6	Bit 5	Bit 4	Bit 3	Bit 2	Bit 1	Bit 0	Register on Page
APFCON	—	—	—	—	—	—	CLC1SEL	NCO1SEL	100
INTCON	GIE	PEIE	TMR0IE	INTE	IOCIE	TMR0IF	INTF	IOCIF	66
NCO1ACCH	NCO1ACC<15:8>								184
NCO1ACCL	NCO1ACC<7:0>								184
NCO1ACCU	—				NCO1ACC<19:16>				184
NCO1CLK	N1PWS<2:0>			—	—	—	N1CKS<1:0>		183
NCO1CON	N1EN	N1OE	N1OUT	N1POL	—	—	—	N1PFM	183
NCO1INCH	NCO1INC<15:8>								185
NCO1INCL	NCO1INC<7:0>								185
PIE2	—	—	—	—	—	NCO1IE	—	—	68
PIR2	—	—	—	—	—	NCO1IF	—	—	71
TRISA	—	—	TRISA5	TRISA4	—(1)	TRISA2	TRISA1	TRISA0	102
TRISC	TRISC7	TRISC6	TRISC5	TRISC4	TRISC3	TRISC2	TRISC1	TRISC0	109

Legend: x = unknown, u = unchanged, – = unimplemented read as '0', q = value depends on condition. Shaded cells are not used for ADC module.

Note 1: Unimplemented, read as '1'.

22.0 COMPLEMENTARY WAVEFORM GENERATOR (CWG) MODULE

The Complementary Waveform Generator (CWG) produces a complementary waveform with dead-band delay from a selection of input sources.

The CWG module has the following features:

- Selectable dead-band clock source control
- Selectable input sources
- Output enable control
- Output polarity control
- Dead-band control with independent 6-bit rising and falling edge dead-band counters
- Auto-shutdown control with:
  - Selectable shutdown sources
  - Auto-restart enable
  - Auto-shutdown pin override control

 © 2011 Microchip Technology Inc.

FIGURE 22-1: CWG BLOCK DIAGRAM

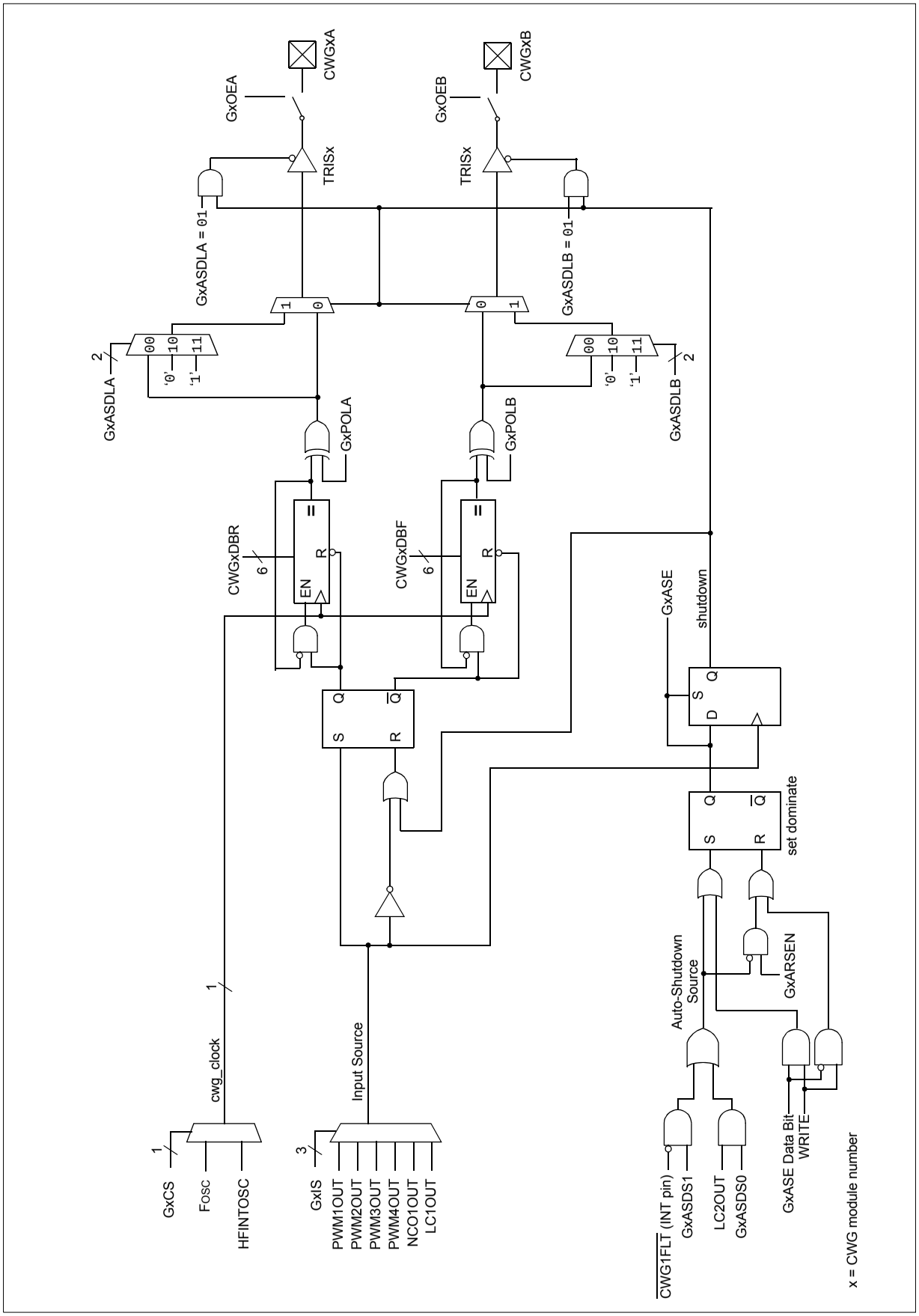

FIGURE 22-2: TYPICAL CWG OPERATION WITH PWM1 (NO AUTO-SHUTDOWN)

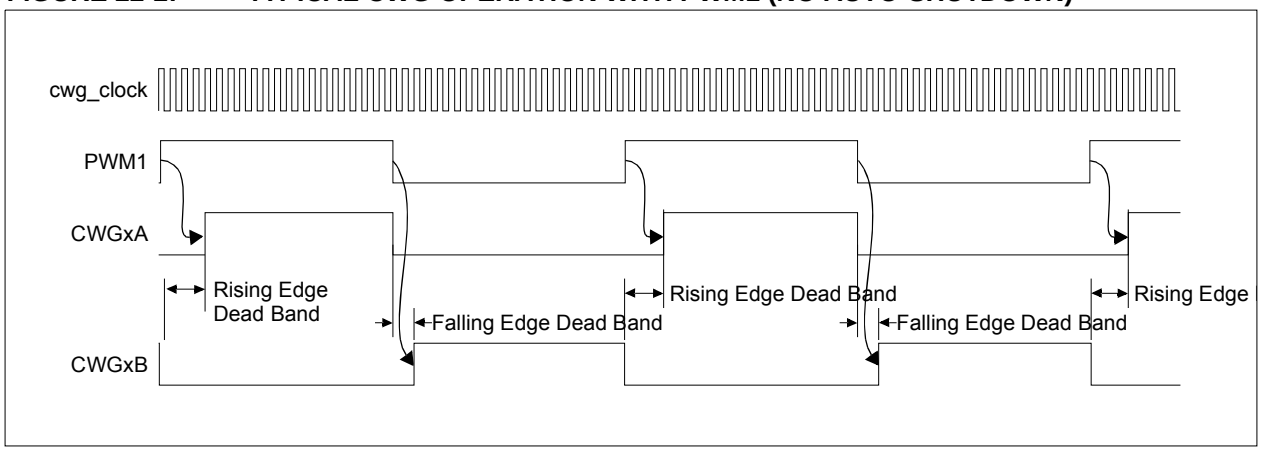

© 2011 Microchip Technology Inc.

22.1 Fundamental Operation

The CWG generates a two output complementary waveform from one of four selectable input sources.

The off-to-on transition of each output can be delayed from the on-to-off transition of the other output, thereby, creating a time delay immediately where neither output is driven. This is referred to as dead time and is covered in **Section 22.5 "Dead-Band Control"**. A typical operating waveform, with dead band, generated from a single input signal is shown in Figure 22-2.

It may be necessary to guard against the possibility of circuit faults or a feedback event arriving too late or not at all. In this case, the active drive must be terminated before the Fault condition causes damage. This is referred to as auto-shutdown and is covered in **Section 22.9 "Auto-shutdown Control"**.

22.2 Clock Source

The CWG module allows for up to 2 different clock sources to be selected:

- Fosc (system clock)
- HFINTOSC (16 MHz only)

The clock sources are selected using the G1CS0 bit of the CWGxCON0 register (Register 22-1).

22.3 Selectable Input Sources

The CWG uses four different input sources to generate the complementary waveform:

- PWM1
- PWM2
- PWM3
- PWM4
- N1OUT
- LC1OUT

The input sources are selected using the GxIS<2:0> bits in the CWGxCON1 register (Register 22-2).

22.4 Output Control

Immediately after the CWG module is enabled, the complementary drive is configured with both CWGxA and CWGxB drives cleared.

22.4.1 OUTPUT ENABLES

Each CWG output pin has individual output enable control. Output enables are selected with the GxOEA and GxOEB bits of the CWGxCON0 register. When an output enable control is cleared, the module asserts no control over the pin. When an output enable is set, the override value or active PWM waveform is applied to the pin per the port priority selection. The output pin enables are dependent on the module enable bit, GxEN. When GxEN is cleared, CWG output enables and CWG drive levels have no effect.

22.4.2 POLARITY CONTROL

The polarity of each CWG output can be selected independently. When the output polarity bit is set, the corresponding output is active high. Clearing the output polarity bit configures the corresponding output as active low. However, polarity does not affect the override levels. Output polarity is selected with the GxPOLA and GxPOLB bits of the CWGxCON0 register.

22.5 Dead-Band Control

Dead-band control provides for non-overlapping output signals to prevent shoot through current in power switches. The CWG contains two 6-bit dead-band counters. One dead-band counter is used for the rising edge of the input source control. The other is used for the falling edge of the input source control.

Dead band is timed by counting CWG clock periods from zero up to the value in the rising or falling dead-band counter registers. See CWGxDBR and CWGxDBF registers (Register 22-4 and Register 22-5, respectively).

22.6 Rising Edge Dead Band

The rising edge dead-band delays the turn-on of the CWGxA output from when the CWGxB output is turned off. The rising edge dead-band time starts when the rising edge of the input source signal goes true. When this happens, the CWGxB output is immediately turned off and the rising edge dead-band delay time starts. When the rising edge dead-band delay time is reached, the CWGxA output is turned on.

The CWGxDBR register sets the duration of the dead-band interval on the rising edge of the input source signal. This duration is from 0 to 64 counts of dead band.

Dead band is always counted off the edge on the input source signal. A count of 0 (zero), indicates that no dead band is present.

If the input source signal is not present for enough time for the count to be completed, no output will be seen on the respective output.

22.7 Falling Edge Dead Band

The falling edge dead band delays the turn-on of the CWGxB output from when the CWGxA output is turned off. The falling edge dead-band time starts when the falling edge of the input source goes true. When this happens, the CWGxA output is immediately turned off and the falling edge dead-band delay time starts. When the falling edge dead-band delay time is reached, the CWGxB output is turned on.

The CWGxDBF register sets the duration of the dead-band interval on the falling edge of the input source signal. This duration is from 0 to 64 counts of dead band.

Dead band is always counted off the edge on the input source signal. A count of 0 (zero), indicates that no dead band is present.

If the input source signal is not present for enough time for the count to be completed, no output will be seen on the respective output.

Refer to Figure 22-3 and Figure 22-4 for examples.

22.8 Dead-Band Uncertainty

When the rising and falling edges of the input source triggers the dead-band counters, the input may be asynchronous. This will create some uncertainty in the dead-band time delay. The maximum uncertainty is equal to one CWG clock period. Refer to Equation 22-1 for more detail.

 © 2011 Microchip Technology Inc.

FIGURE 22-3: DEAD-BAND OPERATION, CWGxDBR = 01H, CWGxDBF = 02H

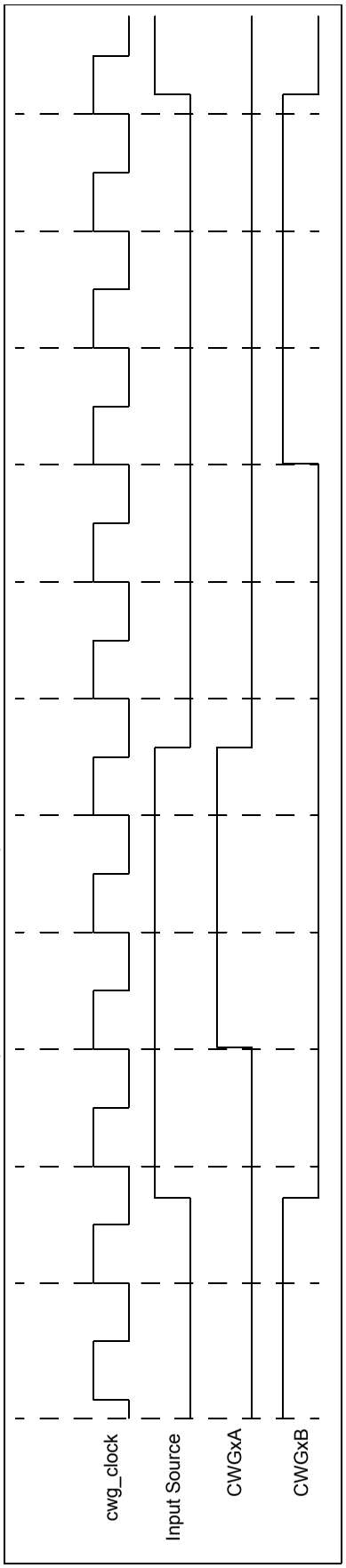

FIGURE 22-4: DEAD-BAND OPERATION, CWGxDBR = 03H, CWGxDBF = 04H, SOURCE SHORTER THAN DEAD BAND

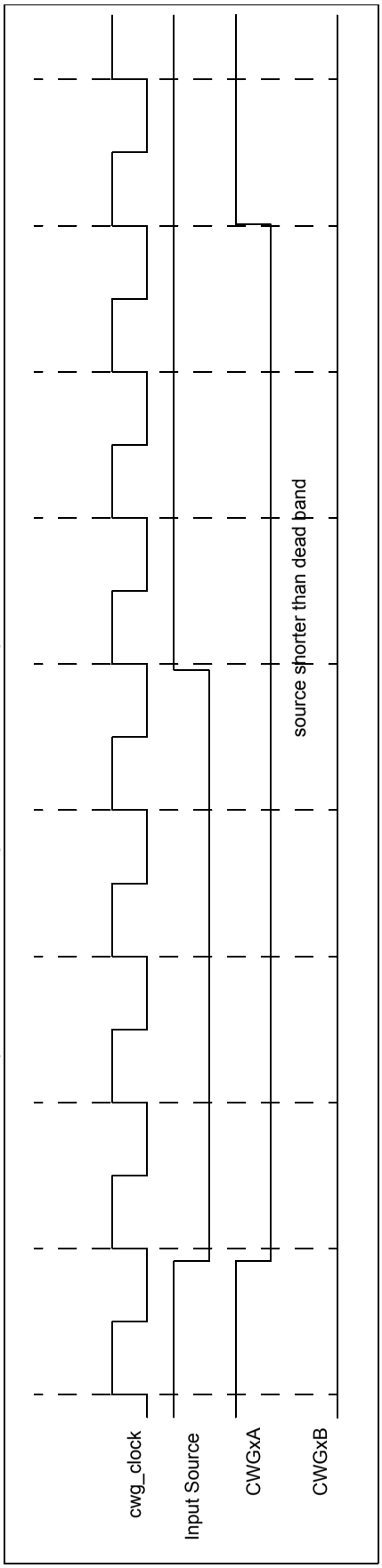

EQUATION 22-1: DEAD-BAND UNCERTAINTY

$$T_{DEADBAND_UNCERTAINTY} = \frac{1}{Fcwg_clock}$$

Example:

$$Fcwg_clock = 16\ MHz$$

Therefore:

$$T_{DEADBAND_UNCERTAINTY} = \frac{1}{Fcwg_clock}$$

$$= \frac{1}{16\ MHz}$$

$$= 625ns$$

 © 2011 Microchip Technology Inc.

22.9 Auto-shutdown Control

Auto-shutdown is a method to immediately override the CWG output levels with specific overrides that allow for safe shutdown of the circuit. The shutdown state can be either cleared automatically or held until cleared by software.

22.9.1 SHUTDOWN

The shutdown state can be entered by either of the following two methods:

- Software generated
- External Input

22.9.1.1 Software Generated Shutdown

Setting the GxASE bit of the CWGxCON2 register will force the CWG into the shutdown state.

When auto-restart is disabled, the shutdown state will persist as long as the GxASE bit is set.

When auto-restart is enabled, the GxASE bit will clear automatically and resume operation on the next rising edge event. See Figure 22-6.

22.9.1.2 External Input Source

External shutdown inputs provide the fastest way to safely suspend CWG operation in the event of a Fault condition. When any of the selected shutdown inputs goes active, the CWG outputs will immediately go to the selected override levels without software delay. Any combination of two input sources can be selected to cause a shutdown condition. The two sources are:

- LC2OUT
- $\overline{\text{CWG1FLT}}$

Shutdown inputs are selected using the GxASDS0 and GxASDS1 bits of the CWGxCON2 register. (Register 22-3).

Note:	Shutdown inputs are level sensitive, not edge sensitive. The shutdown state cannot be cleared, except by disabling auto-shutdown, as long as the shutdown input level persists.

22.10 Operation During Sleep

The CWG module operates independently from the system clock and will continue to run during Sleep, provided that the clock and input sources selected remain active.

The HFINTOSC remains active during Sleep, provided that the CWG module is enabled, the input source is active, and the HFINTOSC is selected as the clock source, regardless of the system clock source selected.

In other words, if the HFINTOSC is simultaneously selected as the system clock and the CWG clock source, when the CWG is enabled and the input source is active, the CPU will go idle during Sleep, but the CWG will continue to operate and the HFINTOSC will remain active.

This will have a direct effect on the Sleep mode current.

22.11 Configuring the CWG

The following steps illustrate how to properly configure the CWG to ensure a synchronous start:

1. Ensure that the TRIS control bits corresponding to CWGxA and CWGxB are set so that both are configured as inputs.
2. Clear the GxEN bit, if not already cleared.
3. Set desired dead-band times with the CWGxDBR and CWGxDBF registers.
4. Setup the following controls in CWGxCON2 auto-shutdown register:
   - Select desired shutdown source.
   - Select both output overrides to the desired levels (this is necessary even if not using auto-shutdown because start-up will be from a shutdown state).
   - Set the GxASE bit and clear the GxARSEN bit.
5. Select the desired input source using the CWGxCON1 register.
6. Configure the following controls in CWGxCON0 register:
   - Select desired clock source.
   - Select the desired output polarities.
   - Set the output enables for the outputs to be used.
7. Set the GxEN bit.
8. Clear TRIS control bits corresponding to CWGxA and CWGxB to be used to configure those pins as outputs.
9. If auto-restart is to be used, set the GxARSEN bit and the GxASE bit will be cleared automatically. Otherwise, clear the GxASE bit to start the CWG.

22.11.1 PIN OVERRIDE LEVELS

The levels driven to the output pins, while the shutdown input is true, are controlled by the GxASDLA and GxASDLB bits of the CWGxCON2 register (Register 22-3). GxASDLA controls the CWG1A override level and GxASDLB controls the CWG1B override level. The control bit logic level corresponds to the output logic drive level while in the shutdown state. The polarity control does not apply to the override level.

22.11.2 AUTO-SHUTDOWN RESTART

After an auto-shutdown event has occurred, there are two ways to have resume operation:

- Software controlled
- Auto-restart

The restart method is selected with the GxARSEN bit of the CWGxCON2 register. Waveforms of software controlled and automatic restarts are shown in Figure 22-5 and Figure 22-6.

22.11.2.1 Software controlled restart

When the GxARSEN bit of the CWGxCON2 register is cleared, the CWG must be restarted after an auto-shutdown event by software.

Clearing the shutdown state requires all selected shutdown inputs to be low, otherwise the GxASE bit will remain set. The overrides will remain in effect until the first rising edge event after the GxASE bit is cleared. The CWG will then resume operation.

22.11.2.2 Auto-Restart

When the GxARSEN bit of the CWGxCON2 register is set, the CWG will restart from the auto-shutdown state automatically.

The GxASE bit will clear automatically when all shutdown sources go low. The overrides will remain in effect until the first rising edge event after the GxASE bit is cleared. The CWG will then resume operation.

 © 2011 Microchip Technology Inc.

FIGURE 22-5: SHUTDOWN FUNCTIONALITY, AUTO-RESTART DISABLED (GxARSEN = 0, GxASDLA = 01, GxASDLB = 01)

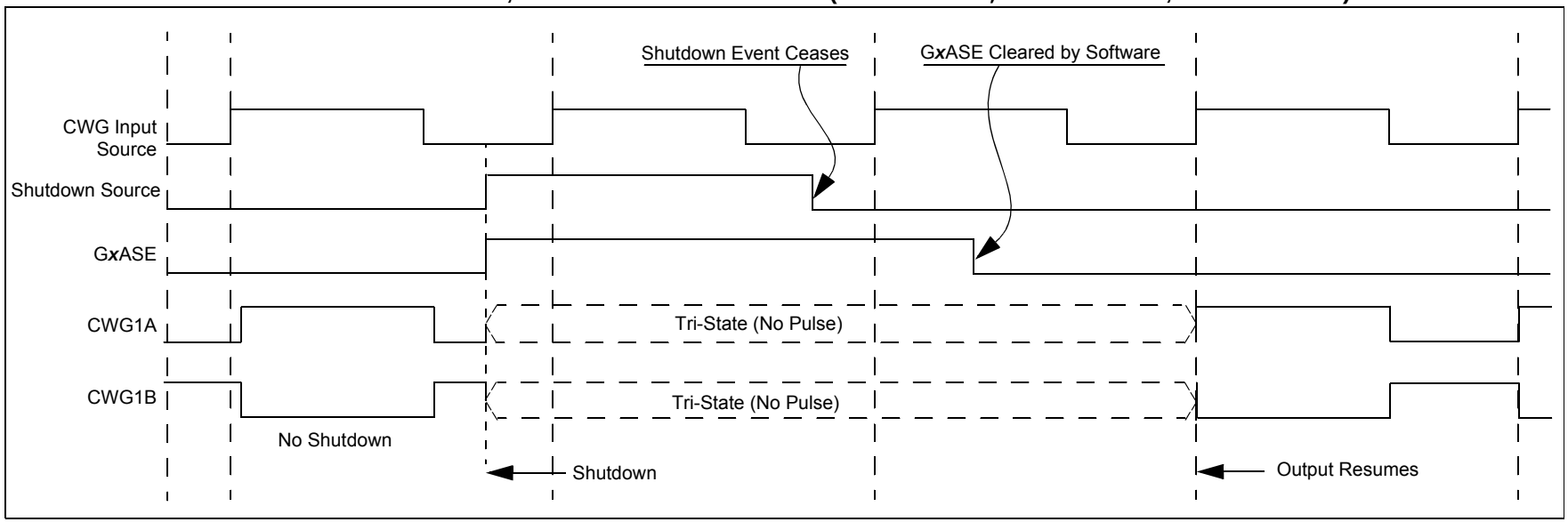

FIGURE 22-6: SHUTDOWN FUNCTIONALITY, AUTO-RESTART ENABLED (GxARSEN = 1, GxASDLA = 01, GxASDLB = 01)

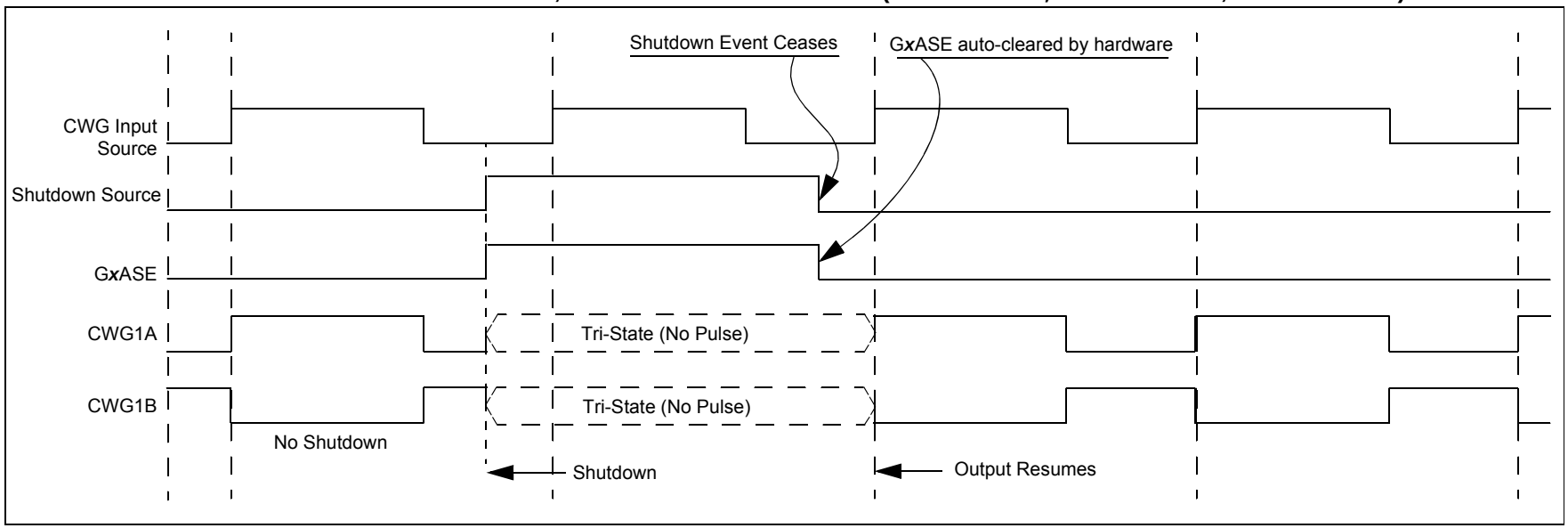

© 2011 Microchip Technology Inc.

22.12 CWG Control Registers

REGISTER 22-1: CWGxCON0: CWG CONTROL REGISTER 0

R/W-0/0	R/W-0/0	R/W-0/0	R/W-0/0	R/W-0/0	U-0	U-0	R/W-0/0
GxEN	GxOEB	GxOEA	GxPOLB	GxPOLA	—	—	GxCS0
bit 7							bit 0

Legend:		
R = Readable bit	W = Writable bit	U = Unimplemented bit, read as ‘0’
u = Bit is unchanged	x = Bit is unknown	-n/n = Value at POR and BOR/Value at all other Resets
‘1’ = Bit is set	‘0’ = Bit is cleared	q = Value depends on condition

bit 7 **GxEN:** CWGx Enable bit
1 = Module is enabled
0 = Module is disabled

bit 6 **GxOEB:** CWGxB Output Enable bit
1 = CWGxB is available on appropriate I/O pin
0 = CWGxB is not available on appropriate I/O pin

bit 5 **GxOEA:** CWGxA Output Enable bit
1 = CWGxA is available on appropriate I/O pin
0 = CWGxA is not available on appropriate I/O pin

bit 4 **GxPOLB:** CWGxB Output Polarity bit
1 = Output is inverted polarity
0 = Output is normal polarity

bit 3 **GxPOLA:** CWGxA Output Polarity bit
1 = Output is inverted polarity
0 = Output is normal polarity

bit 2-1 **Unimplemented**: Read as ‘0’

bit 0 **GxCS0:** CWGx Clock Source bit
1 = HFINTOSC
0 = FOSC

 © 2011 Microchip Technology Inc.

REGISTER 22-2: CWGxCON1: CWG CONTROL REGISTER 1

R/W-x/u	R/W-x/u	R/W-x/u	R/W-x/u	U-0	R/W-0/0	R/W-0/0	R/W-0/0
GxASDLB<1:0>		GxASDLA<1:0>		—	GxIS<2:0>		
bit 7							bit 0

Legend:		
R = Readable bit	W = Writable bit	U = Unimplemented bit, read as '0'
u = Bit is unchanged	x = Bit is unknown	-n/n = Value at POR and BOR/Value at all other Resets
'1' = Bit is set	'0' = Bit is cleared	q = Value depends on condition

bit 7-6 **GxASDLB<1:0>:** CWGx Shutdown State for CWGxB
When an auto shutdown event is present (GxASE = 1):
11 = CWGxB pin is driven to '1', regardless of the setting of the GxPOLB bit.
10 = CWGxB pin is driven to '0', regardless of the setting of the GxPOLB bit.
01 = CWGxB pin is tri-stated
00 = CWGxB pin is driven to it's inactive state after the selected dead-band interval. GxPOLB still will control the polarity of the output.

bit 5-4 **GxASDLA<1:0>:** CWGx Shutdown State for CWGxA
When an auto shutdown event is present (GxASE = 1):
11 = CWGxA pin is driven to '1', regardless of the setting of the GxPOLA bit.
10 = CWGxA pin is driven to '0', regardless of the setting of the GxPOLA bit.
01 = CWGxA pin is tri-stated
00 = CWGxA pin is driven to it's inactive state after the selected dead-band interval. GxPOLA still will control the polarity of the output.

bit 3 **Unimplemented:** Read as '0'

bit 2-0 **GxIS<2:0>:** CWGx Dead-Band Source Select bits
111 = LC1OUT
110 = N1OUT
101 = PWM4OUT
100 = PWM3OUT
011 = PWM2OUT
010 = PWM1OUT
001 = Reserved
000 = Reserved

REGISTER 22-3: CWGxCON2: CWG CONTROL REGISTER 2

R/W-0/0	R/W-0/0	U-0	U-0	U-0	U-0	R/W-0/0	R/W-0/0
GxASE	GxARSEN	—	—	—	—	GxASDFLT	GxASDCLC2
bit 7							bit 0

Legend:		
R = Readable bit	W = Writable bit	U = Unimplemented bit, read as '0'
u = Bit is unchanged	x = Bit is unknown	-n/n = Value at POR and BOR/Value at all other Resets
'1' = Bit is set	'0' = Bit is cleared	q = Value depends on condition

bit 7 **GxASE:** Auto-Shutdown Event Status bit
- 1 = An auto-shutdown event has occurred
- 0 = No auto-shutdown event has occurred

bit 6 **GxARSEN:** Auto-Restart Enable bit
- 1 = Auto-restart is enabled
- 0 = Auto-restart is disabled

bit 5-2 **Unimplemented:** Read as '0'

bit 1 **GxASDFLT:** CWG Auto-shutdown on FLT Enable bit
- 1 = Shutdown when $\overline{\text{CWG1FLT}}$ in put is low
- 0 = $\overline{\text{CWG1FLT}}$ input has no effect on shutdown

bit 0 **GxASDCLC2:** CWG Auto-shutdown on CLC2 Enable bit
- 1 = Shutdown when LC2OUT is high
- 0 = LC2OUT has no effect on shutdown

 © 2011 Microchip Technology Inc.

REGISTER 22-4: CWGxDBR: COMPLEMENTARY WAVEFORM GENERATOR (CWGx) RISING DEAD-BAND COUNT REGISTER

U-0	U-0	R/W-x/u	R/W-x/u	R/W-x/u	R/W-x/u	R/W-x/u	R/W-x/u
—	—	CWG**x**DBR<5:0>					
bit 7							bit 0

Legend:		
R = Readable bit	W = Writable bit	U = Unimplemented bit, read as '0'
u = Bit is unchanged	x = Bit is unknown	-n/n = Value at POR and BOR/Value at all other Resets
'1' = Bit is set	'0' = Bit is cleared	q = Value depends on condition

bit 7-6 **Unimplemented:** Read as '0'

bit 5-0 **CWGxDBR<5:0>:** Complementary Waveform Generator (CWGx) Rising counts

11 1111 = 63-64 counts of dead band
11 1110 = 62-63 counts of dead band

•
•
•

00 0010 = 2-3 counts of dead band
00 0001 = 1-2 counts of dead band
00 0000 = 0 counts of dead band

REGISTER 22-5: CWGxDBF: COMPLEMENTARY WAVEFORM GENERATOR (CWGx) FALLING DEAD-BAND COUNT REGISTER

U-0	U-0	R/W-x/u	R/W-x/u	R/W-x/u	R/W-x/u	R/W-x/u	R/W-x/u
—	—	CWGxDBF<5:0>					
bit 7							bit 0

Legend:		
R = Readable bit	W = Writable bit	U = Unimplemented bit, read as '0'
u = Bit is unchanged	x = Bit is unknown	-n/n = Value at POR and BOR/Value at all other Resets
'1' = Bit is set	'0' = Bit is cleared	q = Value depends on condition

bit 7-6 **Unimplemented:** Read as '0'

bit 5-0 **CWGxDBF<5:0>:** Complementary Waveform Generator (CWGx) Falling counts

11 1111 = 63-64 counts of dead band
11 1110 = 62-63 counts of dead band

•
•
•

00 0010 = 2-3 counts of dead band
00 0001 = 1-2 counts of dead band
00 0000 = 0 counts of dead band. Dead-band generation is bypassed.

TABLE 22-1: SUMMARY OF REGISTERS ASSOCIATED WITH CWG

Name	Bit 7	Bit 6	Bit 5	Bit 4	Bit 3	Bit 2	Bit 1	Bit 0	Register on Page
ANSELA	—	—	—	ANSA4	—	ANSA2	ANSA1	ANSA0	103
CWG1CON0	G1EN	G1OEB	G1OEA	G1POLB	G1POLA	—	—	G1CS0	197
CWG1CON1	G1ASDLB<1:0>		G1ASDLA<1:0>		—	—	G1IS<1:0>		198
CWG1CON2	G1ASE	G1ARSEN	—	—	—	—	G1ASDS1	G1ASDS0	199
CWG1DBF	—	—	CWG1DBF<5:0>						200
CWG1DBR	—	—	CWG1DBR<5:0>						200
TRISA	—	—	TRISA5	TRISA4	—(1)	TRISA2	TRISA1	TRISA0	102
TRISC	TRISC7	TRISC6	TRISC5	TRISC4	TRISC3	TRISC2	TRISC1	TRISC0	109

Legend: x = unknown, u = unchanged, – = unimplemented locations read as '0'. Shaded cells are not used by CWG.

Note 1: Unimplemented, read as '1'.

© 2011 Microchip Technology Inc.

NOTES:

23.0 IN-CIRCUIT SERIAL PROGRAMMING™ (ICSP™)

ICSP™ programming allows customers to manufacture circuit boards with unprogrammed devices. Programming can be done after the assembly process allowing the device to be programmed with the most recent firmware or a custom firmware. Five pins are needed for ICSP™ programming:

- ICSPCLK
- ICSPDAT
- $\overline{MCLR}$/VPP
- VDD
- VSS

In Program/Verify mode the Program Memory, User IDs and the Configuration Words are programmed through serial communications. The ICSPDAT pin is a bidirectional I/O used for transferring the serial data and the ICSPCLK pin is the clock input. For more information on ICSP™ refer to the "*PIC12(L)F1501/PIC16(L)F150X Memory Programming Specification*" (DS41573).

23.1 High-Voltage Programming Entry Mode

The device is placed into High-Voltage Programming Entry mode by holding the ICSPCLK and ICSPDAT pins low then raising the voltage on $\overline{MCLR}$/VPP to VIHH.

Some programmers produce VPP greater than VIHH (9.0V), an external circuit is required to limit the VPP voltage. See Figure 23-1 for example circuit.

FIGURE 23-1: VPP LIMITER EXAMPLE CIRCUIT

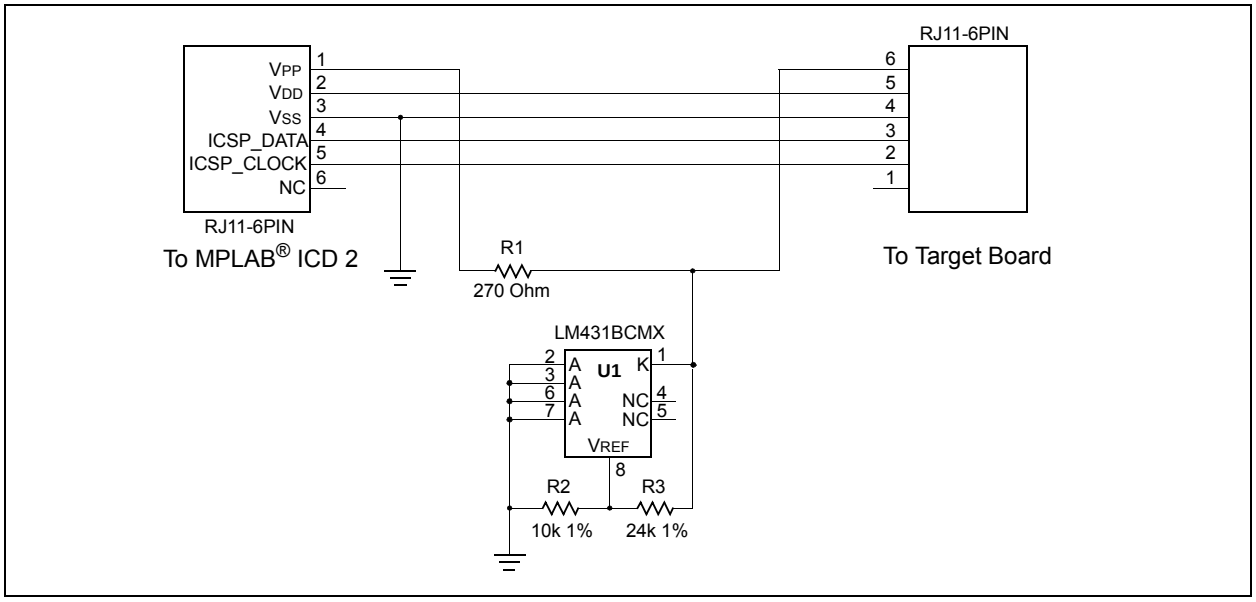

Note:	The MPLAB® ICD 2 produces a VPP voltage greater than the maximum VPP specification of the PIC16(L)F1507.

 © 2011 Microchip Technology Inc.

23.2 Low-Voltage Programming Entry Mode

The Low-Voltage Programming Entry mode allows the PIC16(L)F1507 devices to be programmed using VDD only, without high voltage. When the LVP bit of Configuration Words is set to '1', the low-voltage ICSP programming entry is enabled. To disable the Low-Voltage ICSP mode, the LVP bit must be programmed to '0'.

Entry into the Low-Voltage Programming Entry mode requires the following steps:

1. $\overline{MCLR}$ is brought to VIL.
2. A 32-bit key sequence is presented on ICSPDAT, while clocking ICSPCLK.

Once the key sequence is complete, $\overline{MCLR}$ must be held at VIL for as long as Program/Verify mode is to be maintained.

If low-voltage programming is enabled (LVP = 1), the $\overline{MCLR}$ Reset function is automatically enabled and cannot be disabled. See **Section 6.4 "MCLR"** for more information.

The LVP bit can only be reprogrammed to '0' by using the High-Voltage Programming mode.

23.3 Common Programming Interfaces

Connection to a target device is typically done through an ICSP™ header. A commonly found connector on development tools is the RJ-11 in the 6P6C (6 pin, 6 connector) configuration. See Figure 23-2.

FIGURE 23-2: ICD RJ-11 STYLE CONNECTOR INTERFACE

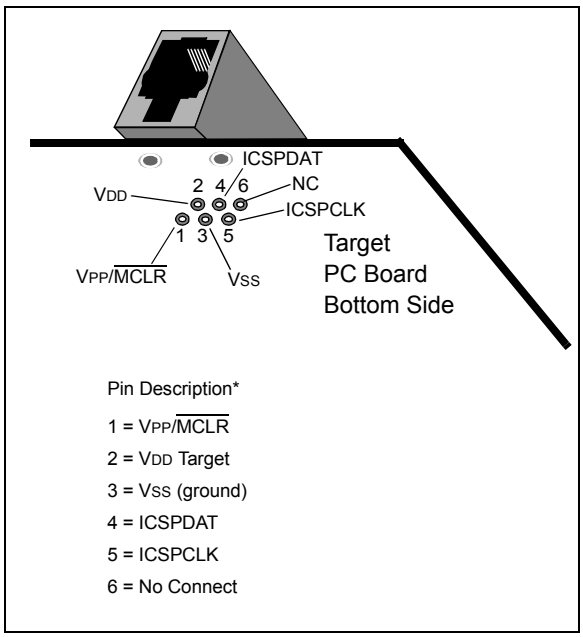

Another connector often found in use with the PICkit™ programmers is a standard 6-pin header with 0.1 inch spacing. Refer to Figure 23-3.

FIGURE 23-3: PICkit™ PROGRAMMER STYLE CONNECTOR INTERFACE

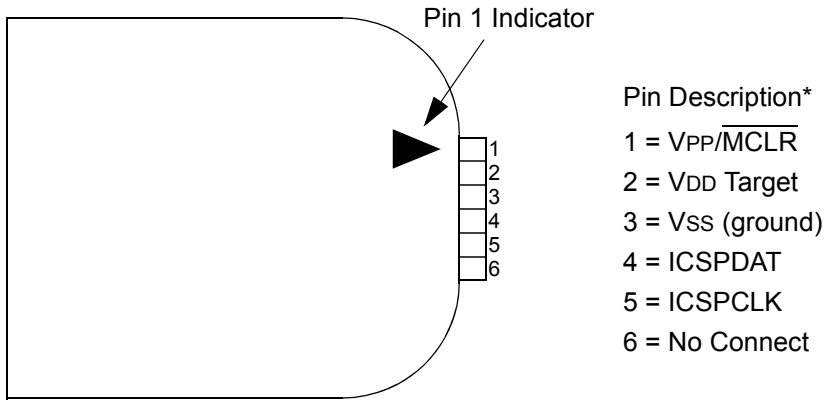

* The 6-pin header (0.100" spacing) accepts 0.025" square pins.

For additional interface recommendations, refer to your specific device programmer manual prior to PCB design.

It is recommended that isolation devices be used to separate the programming pins from other circuitry. The type of isolation is highly dependent on the specific application and may include devices such as resistors, diodes, or even jumpers. See Figure 23-4 for more information.

FIGURE 23-4: TYPICAL CONNECTION FOR ICSP™ PROGRAMMING

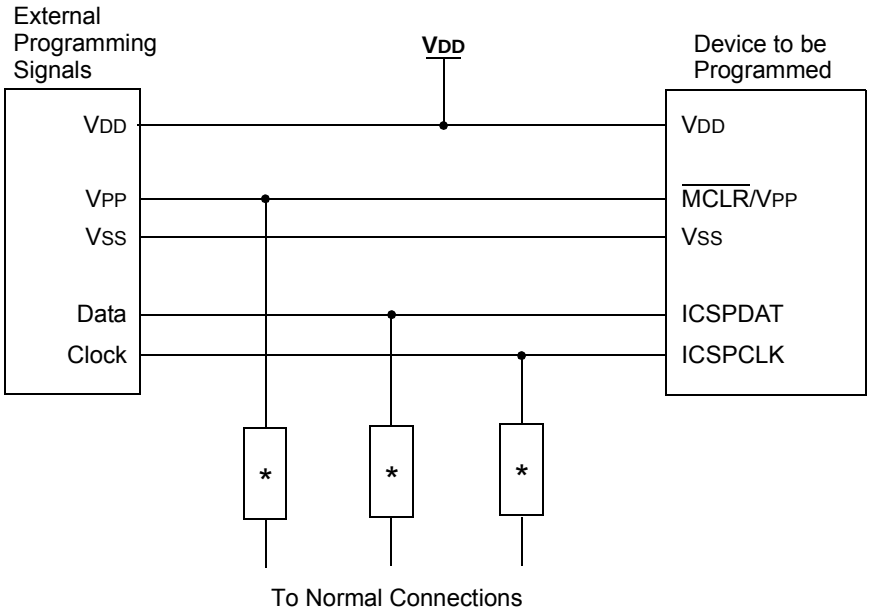

* Isolation devices (as required).

 © 2011 Microchip Technology Inc.

NOTES:

24.0 INSTRUCTION SET SUMMARY

Each PIC16 instruction is a 14-bit word containing the operation code (opcode) and all required operands. The op codes are broken into three broad categories.

- Byte Oriented
- Bit Oriented
- Literal and Control

The literal and control category contains the most varied instruction word format.

Table 24-3 lists the instructions recognized by the MPASM™ assembler.

All instructions are executed within a single instruction cycle, with the following exceptions, which may take two or three cycles:

- Subroutine takes two cycles (CALL, CALLW)
- Returns from interrupts or subroutines take two cycles (RETURN, RETLW, RETFIE)
- Program branching takes two cycles (GOTO, BRA, BRW, BTFSS, BTFSC, DECFSZ, INCSFZ)
- One additional instruction cycle will be used when any instruction references an indirect file register and the file select register is pointing to program memory.

One instruction cycle consists of 4 oscillator cycles; for an oscillator frequency of 4 MHz, this gives a nominal instruction execution rate of 1 MHz.

All instruction examples use the format '0xhh' to represent a hexadecimal number, where 'h' signifies a hexadecimal digit.

24.1 Read-Modify-Write Operations

Any instruction that specifies a file register as part of the instruction performs a Read-Modify-Write (R-M-W) operation. The register is read, the data is modified, and the result is stored according to either the instruction, or the destination designator 'd'. A read operation is performed on a register even if the instruction writes to that register.

TABLE 24-1: OPCODE FIELD DESCRIPTIONS

Field	Description
f	Register file address (0x00 to 0x7F)
W	Working register (accumulator)
b	Bit address within an 8-bit file register
k	Literal field, constant data or label
x	Don't care location (= 0 or 1). The assembler will generate code with x = 0. It is the recommended form of use for compatibility with all Microchip software tools.
d	Destination select; d = 0: store result in W, d = 1: store result in file register f. Default is d = 1.
n	FSR or INDF number. (0-1)
mm	Pre-post increment-decrement mode selection

TABLE 24-2: ABBREVIATION DESCRIPTIONS

Field	Description
PC	Program Counter
$\overline{TO}$	Time-out bit
C	Carry bit
DC	Digit carry bit
Z	Zero bit
$\overline{PD}$	Power-down bit

 © 2011 Microchip Technology Inc.

FIGURE 24-1: GENERAL FORMAT FOR INSTRUCTIONS

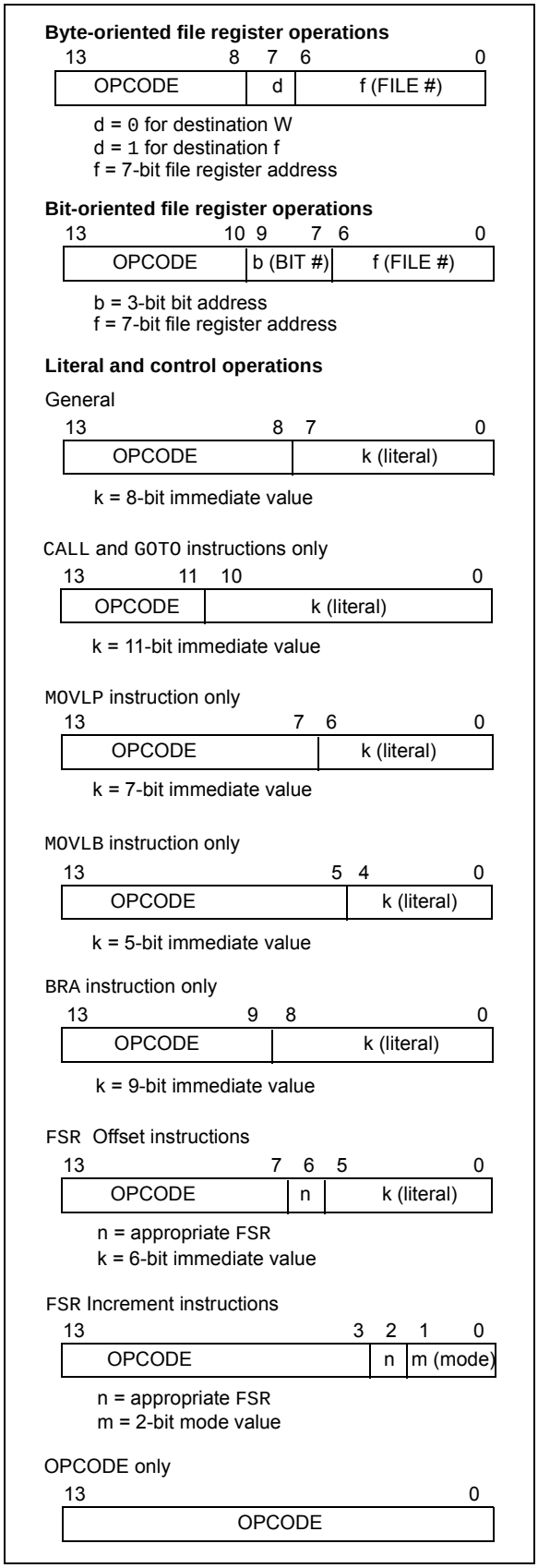

TABLE 24-3: PIC16(L)F1507 ENHANCED INSTRUCTION SET

Mnemonic, Operands		Description	Cycles	14-Bit Opcode MSb			LSb	Status Affected	Notes
BYTE-ORIENTED FILE REGISTER OPERATIONS									
ADDWF	f, d	Add W and f	1	00	0111	dfff	ffff	C, DC, Z	2
ADDWFC	f, d	Add with Carry W and f	1	11	1101	dfff	ffff	C, DC, Z	2
ANDWF	f, d	AND W with f	1	00	0101	dfff	ffff	Z	2
ASRF	f, d	Arithmetic Right Shift	1	11	0111	dfff	ffff	C, Z	2
LSLF	f, d	Logical Left Shift	1	11	0101	dfff	ffff	C, Z	2
LSRF	f, d	Logical Right Shift	1	11	0110	dfff	ffff	C, Z	2
CLRF	f	Clear f	1	00	0001	lfff	ffff	Z	2
CLRW	–	Clear W	1	00	0001	0000	00xx	Z	
COMF	f, d	Complement f	1	00	1001	dfff	ffff	Z	2
DECF	f, d	Decrement f	1	00	0011	dfff	ffff	Z	2
INCF	f, d	Increment f	1	00	1010	dfff	ffff	Z	2
IORWF	f, d	Inclusive OR W with f	1	00	0100	dfff	ffff	Z	2
MOVF	f, d	Move f	1	00	1000	dfff	ffff	Z	2
MOVWF	f	Move W to f	1	00	0000	1fff	ffff		2
RLF	f, d	Rotate Left f through Carry	1	00	1101	dfff	ffff	C	2
RRF	f, d	Rotate Right f through Carry	1	00	1100	dfff	ffff	C	2
SUBWF	f, d	Subtract W from f	1	00	0010	dfff	ffff	C, DC, Z	2
SUBWFB	f, d	Subtract with Borrow W from f	1	11	1011	dfff	ffff	C, DC, Z	2
SWAPF	f, d	Swap nibbles in f	1	00	1110	dfff	ffff		2
XORWF	f, d	Exclusive OR W with f	1	00	0110	dfff	ffff	Z	2
BYTE ORIENTED SKIP OPERATIONS									
DECFSZ	f, d	Decrement f, Skip if 0	1(2)	00	1011	dfff	ffff		1, 2
INCFSZ	f, d	Increment f, Skip if 0	1(2)	00	1111	dfff	ffff		1, 2
BIT-ORIENTED FILE REGISTER OPERATIONS									
BCF	f, b	Bit Clear f	1	01	00bb	bfff	ffff		2
BSF	f, b	Bit Set f	1	01	01bb	bfff	ffff		2
BIT-ORIENTED SKIP OPERATIONS									
BTFSC	f, b	Bit Test f, Skip if Clear	1 (2)	01	10bb	bfff	ffff		1, 2
BTFSS	f, b	Bit Test f, Skip if Set	1 (2)	01	11bb	bfff	ffff		1, 2
LITERAL OPERATIONS									
ADDLW	k	Add literal and W	1	11	1110	kkkk	kkkk	C, DC, Z	
ANDLW	k	AND literal with W	1	11	1001	kkkk	kkkk	Z	
IORLW	k	Inclusive OR literal with W	1	11	1000	kkkk	kkkk	Z	
MOVLB	k	Move literal to BSR	1	00	0000	001k	kkkk		
MOVLP	k	Move literal to PCLATH	1	11	0001	1kkk	kkkk		
MOVLW	k	Move literal to W	1	11	0000	kkkk	kkkk		
SUBLW	k	Subtract W from literal	1	11	1100	kkkk	kkkk	C, DC, Z	
XORLW	k	Exclusive OR literal with W	1	11	1010	kkkk	kkkk	Z	

Note 1: If the Program Counter (PC) is modified, or a conditional test is true, the instruction requires two cycles. The second cycle is executed as a NOP.

2: If this instruction addresses an INDF register and the MSb of the corresponding FSR is set, this instruction will require one additional instruction cycle.

 © 2011 Microchip Technology Inc.

TABLE 24-3: PIC16(L)F1507 ENHANCED INSTRUCTION SET (CONTINUED)

Mnemonic, Operands		Description	Cycles	14-Bit Opcode MSb LSb	Status Affected	Notes
CONTROL OPERATIONS						
BRA	k	Relative Branch	2	11 001k kkkk kkkk		
BRW	–	Relative Branch with W	2	00 0000 0000 1011		
CALL	k	Call Subroutine	2	10 0kkk kkkk kkkk		
CALLW	–	Call Subroutine with W	2	00 0000 0000 1010		
GOTO	k	Go to address	2	10 1kkk kkkk kkkk		
RETFIE	k	Return from interrupt	2	00 0000 0000 1001		
RETLW	k	Return with literal in W	2	11 0100 kkkk kkkk		
RETURN	–	Return from Subroutine	2	00 0000 0000 1000		
INHERENT OPERATIONS						
CLRWDT	–	Clear Watchdog Timer	1	00 0000 0110 0100	$\overline{TO}$, $\overline{PD}$	
NOP	–	No Operation	1	00 0000 0000 0000		
OPTION	–	Load OPTION_REG register with W	1	00 0000 0110 0010		
RESET	–	Software device Reset	1	00 0000 0000 0001		
SLEEP	–	Go into Standby mode	1	00 0000 0110 0011	$\overline{TO}$, $\overline{PD}$	
TRIS	f	Load TRIS register with W	1	00 0000 0110 0fff		
C-COMPILER OPTIMIZED						
ADDFSR	n, k	Add Literal k to FSRn	1	11 0001 0nkk kkkk		
MOVIW	n mm	Move Indirect FSRn to W with pre/post inc/dec modifier, mm	1	00 0000 0001 0nmm kkkk	Z	**2, 3**
	k[n]	Move INDFn to W, Indexed Indirect.	1	11 1111 0nkk 1nmm	Z	**2**
MOVWI	n mm	Move W to Indirect FSRn with pre/post inc/dec modifier, mm	1	00 0000 0001 kkkk		**2, 3**
	k[n]	Move W to INDFn, Indexed Indirect.	1	11 1111 1nkk		**2**

Note 1: If the Program Counter (PC) is modified, or a conditional test is true, the instruction requires two cycles. The second cycle is executed as a NOP.

2: If this instruction addresses an INDF register and the MSb of the corresponding FSR is set, this instruction will require one additional instruction cycle.

3: See Table in the MOVIW and MOVWI instruction descriptions.

24.2 Instruction Descriptions

ADDFSR — Add Literal to FSRn

Syntax:	[*label*] ADDFSR FSRn, k
Operands:	-32 ≤ k ≤ 31 n ∈ [0, 1]
Operation:	FSR(n) + k → FSR(n)
Status Affected:	None
Description:	The signed 6-bit literal ‘k’ is added to the contents of the FSRnH:FSRnL register pair. FSRn is limited to the range 0000h - FFFFh. Moving beyond these bounds will cause the FSR to wrap around.

ADDLW — Add literal and W

Syntax:	[*label*] ADDLW k
Operands:	0 ≤ k ≤ 255
Operation:	(W) + k → (W)
Status Affected:	C, DC, Z
Description:	The contents of the W register are added to the eight-bit literal ‘k’ and the result is placed in the W register.

ADDWF — Add W and f

Syntax:	[*label*] ADDWF f,d
Operands:	0 ≤ f ≤ 127 d ∈ [0,1]
Operation:	(W) + (f) → (destination)
Status Affected:	C, DC, Z
Description:	Add the contents of the W register with register ‘f’. If ‘d’ is ‘0’, the result is stored in the W register. If ‘d’ is ‘1’, the result is stored back in register ‘f’.

ADDWFC — ADD W and CARRY bit to f

Syntax:	[*label*] ADDWFC f {,d}
Operands:	0 ≤ f ≤ 127 d ∈ [0,1]
Operation:	(W) + (f) + (C) → dest
Status Affected:	C, DC, Z
Description:	Add W, the Carry flag and data memory location ‘f’. If ‘d’ is ‘0’, the result is placed in W. If ‘d’ is ‘1’, the result is placed in data memory location ‘f’.

ANDLW — AND literal with W

Syntax:	[*label*] ANDLW k
Operands:	0 ≤ k ≤ 255
Operation:	(W) .AND. (k) → (W)
Status Affected:	Z
Description:	The contents of W register are AND’ed with the eight-bit literal ‘k’. The result is placed in the W register.

ANDWF — AND W with f

Syntax:	[*label*] ANDWF f,d
Operands:	0 ≤ f ≤ 127 d ∈ [0,1]
Operation:	(W) .AND. (f) → (destination)
Status Affected:	Z
Description:	AND the W register with register ‘f’. If ‘d’ is ‘0’, the result is stored in the W register. If ‘d’ is ‘1’, the result is stored back in register ‘f’.

ASRF — Arithmetic Right Shift

Syntax:	[*label*] ASRF f {,d}
Operands:	0 ≤ f ≤ 127 d ∈ [0,1]
Operation:	(f<7>)→ dest<7> (f<7:1>) → dest<6:0>, (f<0>) → C,
Status Affected:	C, Z
Description:	The contents of register ‘f’ are shifted one bit to the right through the Carry flag. The MSb remains unchanged. If ‘d’ is ‘0’, the result is placed in W. If ‘d’ is ‘1’, the result is stored back in register ‘f’.

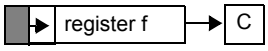

 © 2011 Microchip Technology Inc.

BCF **Bit Clear f**

Syntax:	[*label*] BCF f,b
Operands:	0 ≤ f ≤ 127 0 ≤ b ≤ 7
Operation:	0 → (f<b>)
Status Affected:	None
Description:	Bit 'b' in register 'f' is cleared.

BRA **Relative Branch**

Syntax:	[*label*] BRA label [*label*] BRA $+k
Operands:	-256 ≤ label - PC + 1 ≤ 255 -256 ≤ k ≤ 255
Operation:	(PC) + 1 + k → PC
Status Affected:	None
Description:	Add the signed 9-bit literal 'k' to the PC. Since the PC will have incremented to fetch the next instruction, the new address will be PC + 1 + k. This instruction is a two-cycle instruction. This branch has a limited range.

BRW **Relative Branch with W**

Syntax:	[*label*] BRW
Operands:	None
Operation:	(PC) + (W) → PC
Status Affected:	None
Description:	Add the contents of W (unsigned) to the PC. Since the PC will have incremented to fetch the next instruction, the new address will be PC + 1 + (W). This instruction is a two-cycle instruction.

BSF **Bit Set f**

Syntax:	[*label*] BSF f,b
Operands:	0 ≤ f ≤ 127 0 ≤ b ≤ 7
Operation:	1 → (f<b>)
Status Affected:	None
Description:	Bit 'b' in register 'f' is set.

BTFSC **Bit Test f, Skip if Clear**

Syntax:	[*label*] BTFSC f,b
Operands:	0 ≤ f ≤ 127 0 ≤ b ≤ 7
Operation:	skip if (f<b>) = 0
Status Affected:	None
Description:	If bit 'b' in register 'f' is '1', the next instruction is executed. If bit 'b', in register 'f', is '0', the next instruction is discarded, and a NOP is executed instead, making this a 2-cycle instruction.

BTFSS **Bit Test f, Skip if Set**

Syntax:	[*label*] BTFSS f,b
Operands:	0 ≤ f ≤ 127 0 ≤ b < 7
Operation:	skip if (f<b>) = 1
Status Affected:	None
Description:	If bit 'b' in register 'f' is '0', the next instruction is executed. If bit 'b' is '1', then the next instruction is discarded and a NOP is executed instead, making this a 2-cycle instruction.

CALL **Call Subroutine**

Syntax:	[*label*] CALL k
Operands:	$0 \le k \le 2047$
Operation:	(PC)+ 1→ TOS, k → PC<10:0>, (PCLATH<4:3>) → PC<12:11>
Status Affected:	None
Description:	Call Subroutine. First, return address (PC + 1) is pushed onto the stack. The eleven-bit immediate address is loaded into PC bits <10:0>. The upper bits of the PC are loaded from PCLATH. CALL is a two-cycle instruction.

CALLW **Subroutine Call With W**

Syntax:	[*label*] CALLW
Operands:	None
Operation:	(PC) +1 → TOS, (W) → PC<7:0>, (PCLATH<6:0>) → PC<14:8>
Status Affected:	None
Description:	Subroutine call with W. First, the return address (PC + 1) is pushed onto the return stack. Then, the contents of W is loaded into PC<7:0>, and the contents of PCLATH into PC<14:8>. CALLW is a two-cycle instruction.

CLRF **Clear f**

Syntax:	[*label*] CLRF f
Operands:	$0 \le f \le 127$
Operation:	00h → (f) 1 → Z
Status Affected:	Z
Description:	The contents of register ‘f’ are cleared and the Z bit is set.

CLRW **Clear W**

Syntax:	[*label*] CLRW
Operands:	None
Operation:	00h → (W) 1 → Z
Status Affected:	Z
Description:	W register is cleared. Zero bit (Z) is set.

CLRWDT **Clear Watchdog Timer**

Syntax:	[*label*] CLRWDT
Operands:	None
Operation:	00h → WDT 0 → WDT prescaler, 1 → $\overline{TO}$ 1 → $\overline{PD}$
Status Affected:	$\overline{TO}$, $\overline{PD}$
Description:	CLRWDT instruction resets the Watchdog Timer. It also resets the prescaler of the WDT. Status bits $\overline{TO}$ and $\overline{PD}$ are set.

COMF **Complement f**

Syntax:	[*label*] COMF f,d
Operands:	$0 \le f \le 127$ $d \in [0,1]$
Operation:	$(\bar{f}) \rightarrow$ (destination)
Status Affected:	Z
Description:	The contents of register ‘f’ are complemented. If ‘d’ is ‘0’, the result is stored in W. If ‘d’ is ‘1’, the result is stored back in register ‘f’.

DECF **Decrement f**

Syntax:	[*label*] DECF f,d
Operands:	$0 \le f \le 127$ $d \in [0,1]$
Operation:	(f) - 1 → (destination)
Status Affected:	Z
Description:	Decrement register ‘f’. If ‘d’ is ‘0’, the result is stored in the W register. If ‘d’ is ‘1’, the result is stored back in register ‘f’.

 © 2011 Microchip Technology Inc.

DECFSZ **Decrement f, Skip if 0**

Syntax:	[*label*] DECFSZ f,d
Operands:	$0 \le f \le 127$ $d \in [0,1]$
Operation:	(f) - 1 → (destination); skip if result = 0
Status Affected:	None
Description:	The contents of register 'f' are decremented. If 'd' is '0', the result is placed in the W register. If 'd' is '1', the result is placed back in register 'f'. If the result is '1', the next instruction is executed. If the result is '0', then a NOP is executed instead, making it a 2-cycle instruction.

GOTO **Unconditional Branch**

Syntax:	[*label*] GOTO k
Operands:	$0 \le k \le 2047$
Operation:	k → PC<10:0> PCLATH<4:3> → PC<12:11>
Status Affected:	None
Description:	GOTO is an unconditional branch. The eleven-bit immediate value is loaded into PC bits <10:0>. The upper bits of PC are loaded from PCLATH<4:3>. GOTO is a two-cycle instruction.

INCF **Increment f**

Syntax:	[*label*] INCF f,d
Operands:	$0 \le f \le 127$ $d \in [0,1]$
Operation:	(f) + 1 → (destination)
Status Affected:	Z
Description:	The contents of register 'f' are incremented. If 'd' is '0', the result is placed in the W register. If 'd' is '1', the result is placed back in register 'f'.

INCFSZ **Increment f, Skip if 0**

Syntax:	[*label*] INCFSZ f,d
Operands:	$0 \le f \le 127$ $d \in [0,1]$
Operation:	(f) + 1 → (destination), skip if result = 0
Status Affected:	None
Description:	The contents of register 'f' are incremented. If 'd' is '0', the result is placed in the W register. If 'd' is '1', the result is placed back in register 'f'. If the result is '1', the next instruction is executed. If the result is '0', a NOP is executed instead, making it a 2-cycle instruction.

IORLW **Inclusive OR literal with W**

Syntax:	[*label*] IORLW k
Operands:	$0 \le k \le 255$
Operation:	(W) .OR. k → (W)
Status Affected:	Z
Description:	The contents of the W register are OR'ed with the eight-bit literal 'k'. The result is placed in the W register.

IORWF **Inclusive OR W with f**

Syntax:	[*label*] IORWF f,d
Operands:	$0 \le f \le 127$ $d \in [0,1]$
Operation:	(W) .OR. (f) → (destination)
Status Affected:	Z
Description:	Inclusive OR the W register with register 'f'. If 'd' is '0', the result is placed in the W register. If 'd' is '1', the result is placed back in register 'f'.

LSLF **Logical Left Shift**

Syntax: [*label*] LSLF f {,d}

Operands: $0 \le f \le 127$
$d \in [0,1]$

Operation: (f<7>) → C
(f<6:0>) → dest<7:1>
0 → dest<0>

Status Affected: C, Z

Description: The contents of register 'f' are shifted one bit to the left through the Carry flag. A '0' is shifted into the LSb. If 'd' is '0', the result is placed in W. If 'd' is '1', the result is stored back in register 'f'.



LSRF **Logical Right Shift**

Syntax: [*label*] LSLF f {,d}

Operands: $0 \le f \le 127$
$d \in [0,1]$

Operation: 0 → dest<7>
(f<7:1>) → dest<6:0>,
(f<0>) → C,

Status Affected: C, Z

Description: The contents of register 'f' are shifted one bit to the right through the Carry flag. A '0' is shifted into the MSb. If 'd' is '0', the result is placed in W. If 'd' is '1', the result is stored back in register 'f'.

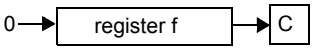

MOVF **Move f**

Syntax: [*label*] MOVF f,d

Operands: $0 \le f \le 127$
$d \in [0,1]$

Operation: (f) → (dest)

Status Affected: Z

Description: The contents of register f is moved to a destination dependent upon the status of d. If d = 0, destination is W register. If d = 1, the destination is file register f itself. d = 1 is useful to test a file register since status flag Z is affected.

Words: 1

Cycles: 1

Example:

```
MOVF    FSR, 0
```

After Instruction
W = value in FSR register
Z = 1

 © 2011 Microchip Technology Inc.

MOVIW **Move INDFn to W**

Syntax: [*label*] MOVIW ++FSRn
[*label*] MOVIW --FSRn
[*label*] MOVIW FSRn++
[*label*] MOVIW FSRn--
[*label*] MOVIW k[FSRn]

Operands: n ∈ [0,1]
mm ∈ [00,01, 10, 11]
-32 ≤ k ≤ 31

Operation: INDFn → W
Effective address is determined by
- FSR + 1 (preincrement)
- FSR - 1 (predecrement)
- FSR + k (relative offset)

After the Move, the FSR value will be either:
- FSR + 1 (all increments)
- FSR - 1 (all decrements)
- Unchanged

Status Affected: Z

Mode	Syntax	mm
Preincrement	++FSRn	00
Predecrement	--FSRn	01
Postincrement	FSRn++	10
Postdecrement	FSRn--	11

Description: This instruction is used to move data between W and one of the indirect registers (INDFn). Before/after this move, the pointer (FSRn) is updated by pre/post incrementing/decrementing it.

Note: The INDFn registers are not physical registers. Any instruction that accesses an INDFn register actually accesses the register at the address specified by the FSRn.

FSRn is limited to the range 0000h - FFFFh. Incrementing/decrementing it beyond these bounds will cause it to wrap around.

MOVLB **Move literal to BSR**

Syntax: [*label*] MOVLB k

Operands: 0 ≤ k ≤ 15

Operation: k → BSR

Status Affected: None

Description: The five-bit literal ‘k’ is loaded into the Bank Select Register (BSR).

MOVLP **Move literal to PCLATH**

Syntax: [*label*] MOVLP k

Operands: 0 ≤ k ≤ 127

Operation: k → PCLATH

Status Affected: None

Description: The seven-bit literal ‘k’ is loaded into the PCLATH register.

MOVLW **Move literal to W**

Syntax: [*label*] MOVLW k

Operands: 0 ≤ k ≤ 255

Operation: k → (W)

Status Affected: None

Description: The eight-bit literal ‘k’ is loaded into W register. The “don’t cares” will assemble as ‘0’s.

Words: 1

Cycles: 1

Example:
```
MOVLW   0x5A
```
After Instruction
W = 0x5A

MOVWF **Move W to f**

Syntax: [*label*] MOVWF f

Operands: 0 ≤ f ≤ 127

Operation: (W) → (f)

Status Affected: None

Description: Move data from W register to register ‘f’.

Words: 1

Cycles: 1

Example:
```
MOVWF   OPTION_REG
```
Before Instruction
OPTION_REG = 0xFF
W = 0x4F
After Instruction
OPTION_REG = 0x4F
W = 0x4F

MOVWI **Move W to INDFn**

Syntax:
[*label*] MOVWI ++FSRn
[*label*] MOVWI --FSRn
[*label*] MOVWI FSRn++
[*label*] MOVWI FSRn--
[*label*] MOVWI k[FSRn]

Operands:
n ∈ [0,1]
mm ∈ [00,01, 10, 11]
-32 ≤ k ≤ 31

Operation:
W → INDFn
Effective address is determined by
- FSR + 1 (preincrement)
- FSR - 1 (predecrement)
- FSR + k (relative offset)

After the Move, the FSR value will be either:
- FSR + 1 (all increments)
- FSR - 1 (all decrements)

Unchanged

Status Affected: None

Mode	Syntax	mm
Preincrement	++FSRn	00
Predecrement	--FSRn	01
Postincrement	FSRn++	10
Postdecrement	FSRn--	11

Description: This instruction is used to move data between W and one of the indirect registers (INDFn). Before/after this move, the pointer (FSRn) is updated by pre/post incrementing/decrementing it.

Note: The INDFn registers are not physical registers. Any instruction that accesses an INDFn register actually accesses the register at the address specified by the FSRn.

FSRn is limited to the range 0000h - FFFFh. Incrementing/decrementing it beyond these bounds will cause it to wrap around.

The increment/decrement operation on FSRn WILL NOT affect any Status bits.

NOP **No Operation**

Syntax: [*label*] NOP
Operands: None
Operation: No operation
Status Affected: None
Description: No operation.
Words: 1
Cycles: 1
Example: NOP

OPTION **Load OPTION_REG Register with W**

Syntax: [*label*] OPTION
Operands: None
Operation: (W) → OPTION_REG
Status Affected: None
Description: Move data from W register to OPTION_REG register.

RESET **Software Reset**

Syntax: [*label*] RESET
Operands: None
Operation: Execute a device Reset. Resets the nRI flag of the PCON register.
Status Affected: None
Description: This instruction provides a way to execute a hardware Reset by software.

 © 2011 Microchip Technology Inc.

RETFIE **Return from Interrupt**

Syntax: [*label*] RETFIE

Operands: None

Operation: TOS → PC,
1 → GIE

Status Affected: None

Description: Return from Interrupt. Stack is POPed and Top-of-Stack (TOS) is loaded in the PC. Interrupts are enabled by setting Global
Interrupt Enable bit, GIE (INTCON<7>). This is a two-cycle instruction.

Words: 1

Cycles: 2

Example:

```
RETFIE
```

After Interrupt
PC = TOS
GIE = 1

RETLW **Return with literal in W**

Syntax: [*label*] RETLW k

Operands: 0 ≤ k ≤ 255

Operation: k → (W);
TOS → PC

Status Affected: None

Description: The W register is loaded with the eight bit literal ‘k’. The program counter is loaded from the top of the stack (the return address). This is a two-cycle instruction.

Words: 1

Cycles: 2

Example:

```
CALL TABLE;W contains table
    ;offset value
•   ;W now has table value
•
•
ADDWF PC  ;W = offset
RETLW k1  ;Begin table
RETLW k2  ;
•
•
•
RETLW kn  ; End of table
```

Before Instruction
W = 0x07
After Instruction
W = value of k8

RETURN **Return from Subroutine**

Syntax: [*label*] RETURN

Operands: None

Operation: TOS → PC

Status Affected: None

Description: Return from subroutine. The stack is POPed and the top of the stack (TOS) is loaded into the program counter. This is a two-cycle instruction.

RLF **Rotate Left f through Carry**

Syntax: [*label*] RLF f,d

Operands: 0 ≤ f ≤ 127
d ∈ [0,1]

Operation: See description below

Status Affected: C

Description: The contents of register ‘f’ are rotated one bit to the left through the Carry flag. If ‘d’ is ‘0’, the result is placed in the W register. If ‘d’ is ‘1’, the result is stored back in register ‘f’.

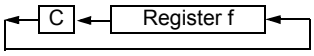

Words: 1

Cycles: 1

Example:

```
RLF     REG1,0
```

Before Instruction
REG1 = 1110 0110
C = 0
After Instruction
REG1 = 1110 0110
W = 1100 1100
C = 1

RRF **Rotate Right f through Carry**

Syntax: [*label*] RRF f,d

Operands: $0 \le f \le 127$
$d \in [0,1]$

Operation: See description below

Status Affected: C

Description: The contents of register 'f' are rotated one bit to the right through the Carry flag. If 'd' is '0', the result is placed in the W register. If 'd' is '1', the result is placed back in register 'f'.

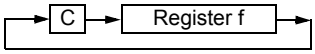

SLEEP **Enter Sleep mode**

Syntax: [*label*] SLEEP

Operands: None

Operation: 00h → WDT,
0 → WDT prescaler,
1 → $\overline{TO}$,
0 → $\overline{PD}$

Status Affected: $\overline{TO}$, $\overline{PD}$

Description: The power-down Status bit, $\overline{PD}$ is cleared. Time-out Status bit, $\overline{TO}$ is set. Watchdog Timer and its prescaler are cleared.
The processor is put into Sleep mode with the oscillator stopped.

SUBLW **Subtract W from literal**

Syntax: [*label*] SUBLW k

Operands: $0 \le k \le 255$

Operation: k - (W) → (W)

Status Affected: C, DC, Z

Description: The W register is subtracted (2's complement method) from the eight-bit literal 'k'. The result is placed in the W register.

C = 0	W > k
C = 1	W ≤ k
DC = 0	W<3:0> > k<3:0>
DC = 1	W<3:0> ≤ k<3:0>

SUBWF **Subtract W from f**

Syntax: [*label*] SUBWF f,d

Operands: $0 \le f \le 127$
$d \in [0,1]$

Operation: (f) - (W) → (destination)

Status Affected: C, DC, Z

Description: Subtract (2's complement method) W register from register 'f'. If 'd' is '0', the result is stored in the W register. If 'd' is '1', the result is stored back in register 'f.

C = 0	W > f
C = 1	W ≤ f
DC = 0	W<3:0> > f<3:0>
DC = 1	W<3:0> ≤ f<3:0>

SUBWFB **Subtract W from f with Borrow**

Syntax: SUBWFB f {,d}

Operands: $0 \le f \le 127$
$d \in [0,1]$

Operation: (f) – (W) – ($\overline{B}$) → dest

Status Affected: C, DC, Z

Description: Subtract W and the BORROW flag (CARRY) from register 'f' (2's complement method). If 'd' is '0', the result is stored in W. If 'd' is '1', the result is stored back in register 'f'.

 © 2011 Microchip Technology Inc.

SWAPF **Swap Nibbles in f**

Syntax:	[*label*] SWAPF f,d
Operands:	$0 \le f \le 127$ $d \in [0,1]$
Operation:	(f<3:0>) → (destination<7:4>), (f<7:4>) → (destination<3:0>)
Status Affected:	None
Description:	The upper and lower nibbles of register ‘f’ are exchanged. If ‘d’ is ‘0’, the result is placed in the W register. If ‘d’ is ‘1’, the result is placed in register ‘f’.

TRIS **Load TRIS Register with W**

Syntax:	[*label*] TRIS f
Operands:	$5 \le f \le 7$
Operation:	(W) → TRIS register ‘f’
Status Affected:	None
Description:	Move data from W register to TRIS register. When ‘f’ = 5, TRISA is loaded. When ‘f’ = 6, TRISB is loaded. When ‘f’ = 7, TRISC is loaded.

XORLW **Exclusive OR literal with W**

Syntax:	[*label*] XORLW k
Operands:	$0 \le k \le 255$
Operation:	(W) .XOR. k → (W)
Status Affected:	Z
Description:	The contents of the W register are XOR’ed with the eight-bit literal ‘k’. The result is placed in the W register.

XORWF **Exclusive OR W with f**

Syntax:	[*label*] XORWF f,d
Operands:	$0 \le f \le 127$ $d \in [0,1]$
Operation:	(W) .XOR. (f) → (destination)
Status Affected:	Z
Description:	Exclusive OR the contents of the W register with register ‘f’. If ‘d’ is ‘0’, the result is stored in the W register. If ‘d’ is ‘1’, the result is stored back in register ‘f’.

25.0 ELECTRICAL SPECIFICATIONS

Absolute Maximum Ratings(†)

Ambient temperature under bias ..... -40°C to +125°C
Storage temperature ..... -65°C to +150°C
Voltage on V_{DD} with respect to V_{SS}, PIC16F1507 ..... -0.3V to +6.5V
Voltage on V_{DD} with respect to V_{SS}, PIC16LF1507 ..... -0.3V to +4.0V
Voltage on $\overline{MCLR}$ with respect to Vss ..... -0.3V to +9.0V
Voltage on all other pins with respect to V_{SS} ..... -0.3V to (V_{DD} + 0.3V)
Total power dissipation(1) ..... 800 mW
Maximum current out of V_{SS} pin, -40°C ≤ T_A ≤ +85°C for industrial ..... 396 mA
Maximum current out of V_{SS} pin, -40°C ≤ T_A ≤ +125°C for extended ..... 114 mA
Maximum current into V_{DD} pin, -40°C ≤ T_A ≤ +85°C for industrial ..... 292 mA
Maximum current into V_{DD} pin, -40°C ≤ T_A ≤ +125°C for extended ..... 107 mA
Clamp current, I_K (V_{PIN} < 0 or V_{PIN} > V_{DD}) ..... ± 20 mA
Maximum output current sunk by any I/O pin ..... 25 mA
Maximum output current sourced by any I/O pin ..... 25 mA

Note 1: Power dissipation is calculated as follows: $P_{DIS} = V_{DD} \times \{I_{DD} - \sum I_{OH}\} + \sum \{(V_{DD} - V_{OH}) \times I_{OH}\} + \sum (V_{OI} \times I_{OL})$.

† NOTICE: Stresses above those listed under “Absolute Maximum Ratings” may cause permanent damage to the device. This is a stress rating only and functional operation of the device at those or any other conditions above those indicated in the operation listings of this specification is not implied. Exposure above maximum rating conditions for extended periods may affect device reliability.

PRELIMINARY

 © 2011 Microchip Technology Inc.

FIGURE 25-1: PIC16F1507 VOLTAGE FREQUENCY GRAPH, -40°C ≤ TA ≤ +125°C

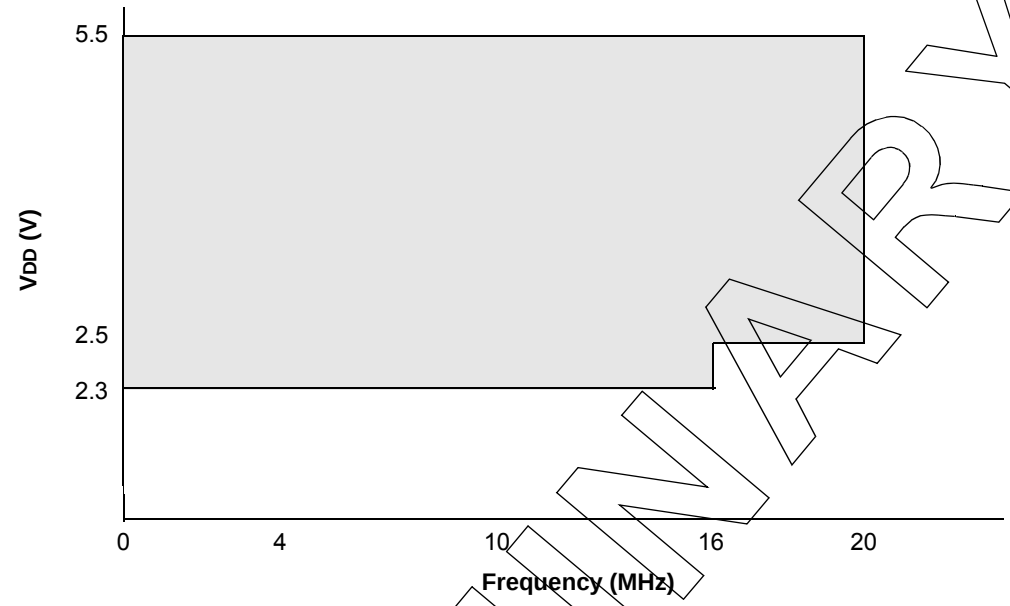

Note 1: The shaded region indicates the permissible combinations of voltage and frequency.
2: Refer to Table 25-1 for each Oscillator mode's supported frequencies.

FIGURE 25-2: PIC16LF1507 VOLTAGE FREQUENCY GRAPH, -40°C ≤ TA ≤ +125°C

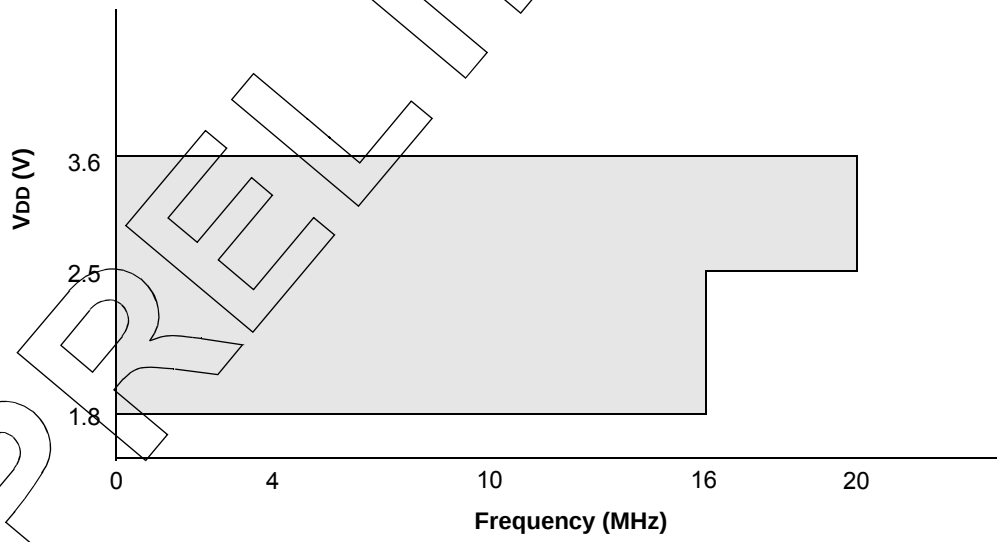

Note 1: The shaded region indicates the permissible combinations of voltage and frequency.
2: Refer to Table 25-1 for each Oscillator mode's supported frequencies.

PRELIMINARY

25.1 DC Characteristics: PIC16(L)F1507-I/E (Industrial, Extended)

PIC16LF1507			**Standard Operating Conditions (unless otherwise stated)** Operating temperature -40°C ≤ TA ≤ +85°C for industrial -40°C ≤ TA ≤ +125°C for extended				
PIC16F1507			**Standard Operating Conditions (unless otherwise stated)** Operating temperature -40°C ≤ TA ≤ +85°C for industrial -40°C ≤ TA ≤ +125°C for extended				
Param. No.	**Sym.**	**Characteristic**	**Min.**	**Typ†**	**Max.**	**Units**	**Conditions**
D001	VDD	**Supply Voltage**					
		PIC16LF1507	1.8 2.5	— —	3.6 3.6	V V	FOSC ≤ 16 MHz: FOSC ≤ 20 MHz
D001		PIC16F1507	2.3 2.5	— —	5.5 5.5	V V	FOSC ≤ 16 MHz: FOSC ≤ 20 MHz
D002*	VDR	**RAM Data Retention Voltage(1)**					
		PIC16LF1507	1.5	—	—	V	Device in Sleep mode
D002*		PIC16F1507	1.7	—	—	V	Device in Sleep mode
	VPOR*	**Power-on Reset Release Voltage**	—	1.6	—	V	
	VPORR*	**Power-on Reset Rearm Voltage**					
		PIC16LF1507	—	0.8	—	V	Device in Sleep mode
		PIC16F1507	—	1.7	—	V	Device in Sleep mode
D003	VADFVR	**Fixed Voltage Reference Voltage for ADC, Initial Accuracy**	— — — — — — —	1 1 1 1 1 1 1	— — — — — — —	%	1.024V, VDD ≥ 2.5V, 85°C (**NOTE 2**) 1.024V, VDD ≥ 2.5V, 125°C (**NOTE 2**) 2.048V, VDD ≥ 2.5V, 85°C 2.048V, VDD ≥ 2.5V, 125°C 4.096V, VDD ≥ 4.75V, 85°C 4.096V, VDD ≥ 4.75V, 125°C
D003C*	TCVFVR	**Temperature Coefficient, Fixed Voltage Reference**	—	-130	—	ppm/°C	
D003D*	ΔVFVR/ ΔVIN	**Line Regulation, Fixed Voltage Reference**	—	0.270	—	%/V	
D004*	SVDD	**VDD Rise Rate** to ensure internal Power-on Reset signal	0.05	—	—	V/ms	See **Section 6.1 "Power-on Reset (POR)"** for details.

* These parameters are characterized but not tested.

† Data in "Typ" column is at 3.0V, 25°C unless otherwise stated. These parameters are for design guidance only and are not tested.

Note 1: This is the limit to which VDD can be lowered in Sleep mode without losing RAM data.

2: For proper operation, the minimum value of the ADC positive voltage reference must be 1.8V or greater. When selecting the FVR or the VREF+ pin as the source of the ADC positive voltage reference, be aware that the voltage must be 1.8V or greater.

PRELIMINARY

 © 2011 Microchip Technology Inc.

FIGURE 25-3: POR AND POR REARM WITH SLOW RISING VDD

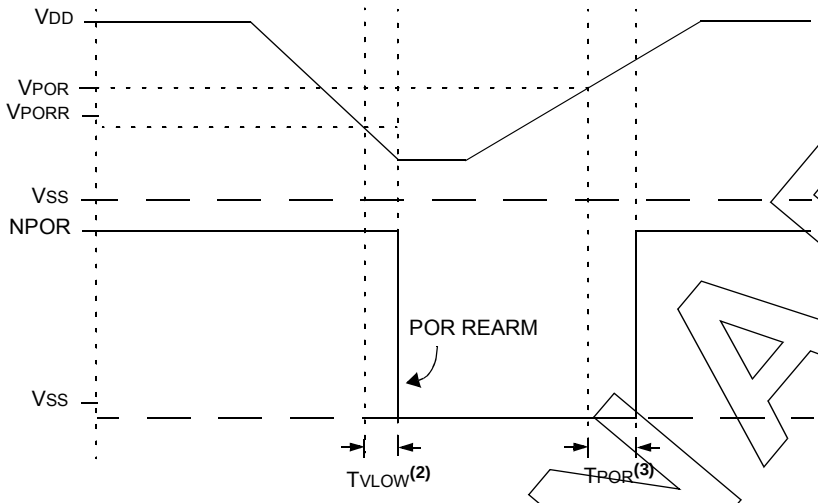

Note 1: When NPOR is low, the device is held in Reset.
2: TPOR 1 μs typical.
3: TVLOW 2.7 μs typical.

PRELIMINARY

25.2 DC Characteristics: PIC16(L)F1507-I/E (Industrial, Extended)

PIC16LF1507			Standard Operating Conditions (unless otherwise stated) Operating temperature -40°C ≤ TA ≤ +85°C for industrial -40°C ≤ TA ≤ +125°C for extended				
PIC16F1507			**Standard Operating Conditions (unless otherwise stated)** Operating temperature -40°C ≤ TA ≤ +85°C for industrial -40°C ≤ TA ≤ +125°C for extended				
Param No.	**Device Characteristics**	**Min.**	**Typ†**	**Max.**	**Units**	**Conditions**	
						VDD	**Note**
	Supply Current (IDD)(1, 2)						
D013		—	40	—	μA	1.8	FOSC = 1 MHz EC Oscillator mode, Medium-power mode
		—	70	—	μA	3.0	
D013		—	60	—	μA	2.3	FOSC = 1 MHz EC Oscillator mode Medium-power mode
		—	80	—	μA	3.0	
		—	93	—	μA	5.0	
D014		—	260	—	μA	2.3	FOSC = 4 MHz EC Oscillator mode, Medium-power mode
		—	550	—	μA	3.0	
D014		—	375	—	μA	2.3	FOSC = 4 MHz EC Oscillator mode Medium-power mode
		—	600	—	μA	3.0	
		—	650	—	μA	5.0	
D015		—	3.6	—	μA	1.8	FOSC = 31 kHz LFINTOSC mode
		—	7.0	—	μA	3.0	
D015		—	21	—	μA	2.3	FOSC = 31 kHz LFINTOSC mode
		—	27	—	μA	3.0	
		—	28	—	μA	5.0	
D017*		—	0.8	—	mA	1.8	FOSC = 8 MHz HFINTOSC mode
		—	1.3	—	mA	3.0	
D017*		—	1.0	—	mA	2.3	FOSC = 8 MHz HFINTOSC mode
		—	1.5	—	mA	3.0	
		—	1.7	—	mA	5.0	
D018		—	1.2	—	mA	1.8	FOSC = 16 MHz HFINTOSC mode
		—	2.5	—	mA	3.0	
D018		—	1.7	—	mA	2.3	FOSC = 16 MHz HFINTOSC mode
		—	2.7	—	mA	3.0	
		—	3.0	—	mA	5.0	
D019A		—	1.15	—	mA	3.0	FOSC = 20 MHz ECH mode
D019A		—	1.15	—	mA	3.0	FOSC = 20 MHz ECH mode
		—	1.3	—	mA	5.0	

* These parameters are characterized but not tested.

† Data in "Typ" column is at 3.0V, 25°C unless otherwise stated. These parameters are for design guidance only and are not tested.

Note 1: The test conditions for all IDD measurements in active operation mode are: CLKIN = external square wave, from rail-to-rail; all I/O pins tri-stated, pulled to VDD; $\overline{MCLR}$ = VDD; WDT disabled.

2: The supply current is mainly a function of the operating voltage and frequency. Other factors, such as I/O pin loading and switching rate, oscillator type, internal code execution pattern and temperature, also have an impact on the current consumption.

PRELIMINARY

 © 2011 Microchip Technology Inc.

25.2 DC Characteristics: PIC16(L)F1507-I/E (Industrial, Extended) (Continued)

PIC16LF1507			**Standard Operating Conditions (unless otherwise stated)** Operating temperature -40°C ≤ TA ≤ +85°C for industrial -40°C ≤ TA ≤ +125°C for extended				
PIC16F1507			**Standard Operating Conditions (unless otherwise stated)** Operating temperature -40°C ≤ TA ≤ +85°C for industrial -40°C ≤ TA ≤ +125°C for extended				
Param No.	**Device Characteristics**	**Min.**	**Typ†**	**Max.**	**Units**	**Conditions**	
						VDD	**Note**
D019B		—	8	—	µA	1.8	FOSC = 32 kHz ECL mode
		—	10	—	µA	3.0	
D019B		—	10	—	µA	3.0	FOSC = 32 kHz ECL mode
		—	11	—	µA	5.0	
D019C		—	25	—	µA	1.8	FOSC = 500 kHz ECM mode
		—	35	—	µA	3.0	
D019C		—	35	—	µA	3.0	FOSC = 500 kHz ECM mode
		—	40	—	µA	5.0	

* These parameters are characterized but not tested.

† Data in "Typ" column is at 3.0V, 25°C unless otherwise stated. These parameters are for design guidance only and are not tested.

Note 1: The test conditions for all IDD measurements in active operation mode are: CLKIN = external square wave, from rail-to-rail; all I/O pins tri-stated, pulled to VDD; $\overline{MCLR}$ = VDD; WDT disabled.

2: The supply current is mainly a function of the operating voltage and frequency. Other factors, such as I/O pin loading and switching rate, oscillator type, internal code execution pattern and temperature, also have an impact on the current consumption.

PRELIMINARY

25.3 DC Characteristics: PIC16(L)F1507-I/E (Power-Down)

PIC16LF1507			Standard Operating Conditions (unless otherwise stated) Operating temperature -40°C ≤ TA ≤ +85°C for industrial -40°C ≤ TA ≤ +125°C for extended					
PIC16F1507			**Standard Operating Conditions (unless otherwise stated)** Operating temperature -40°C ≤ TA ≤ +85°C for industrial -40°C ≤ TA ≤ +125°C for extended					
Param No.	**Device Characteristics**	**Min.**	**Typ†**	**Max. +85°C**	**Max. +125°C**	**Units**	**Conditions**	
							VDD	**Note**
	Power-down Base Current (IPD)(2)							
D022		—	0.02	—	—	µA	1.8	WDT, BOR, FVR, and T1OSC disabled, all Peripherals Inactive
		—	0.03	—	—	µA	3.0	
D022		—	300	—	—	nA	3.0	WDT, BOR, FVR, and T1OSC disabled, all Peripherals Inactive
		—	470	—	—	nA	5.0	
D023		—	0.5	—	—	µA	1.8	LPWDT Current **(Note 1)**
		—	0.8	—	—	µA	3.0	
D023		—	500	—	—	nA	2.3	LPWDT Current **(Note 1)**
		—	770	—	—	nA	3.0	
		—	850	—	—	nA	5.0	
D023A		—	8.5	—	—	µA	1.8	FVR current **(Note 1)**
		—	8.5	—	—	µA	3.0	
D023A		—	18	—	—	µA	2.3	FVR current **(Note 1)**
		—	18.5	—	—	µA	3.0	
		—	19	—	—	mA	5.0	
D024		—	8.1	—	—	µA	3.0	BOR Current **(Note 1)**
D024		—	7	—	—	µA	3.0	BOR Current **(Note 1)**
		—	9	—	—	µA	5.0	
D24A		—	300	—	—	nA	3.0	LPBOR Current
D026		—	0.1	—	—	µA	1.8	A/D Current **(Note 1, Note 3)**, no conversion in progress
		—	0.1	—	—	µA	3.0	
D026		—	160	—	—	nA	2.3	A/D Current **(Note 1, Note 3)**, no conversion in progress
		—	400	—	—	nA	3.0	
		—	500	—	—	nA	5.0	
D026A*		—	250	—	—	µA	1.8	A/D Current **(Note 1, Note 3)**, conversion in progress
		—	250	—	—	µA	3.0	
D026A*		—	280	—	—	µA	2.3	A/D Current **(Note 1, Note 3)**, conversion in progress
		—	280	—	—	µA	3.0	
		—	280	—	—	µA	5.0	

* These parameters are characterized but not tested.

† Data in "Typ" column is at 3.0V, 25°C unless otherwise stated. These parameters are for design guidance only and are not tested.

Note 1: The peripheral current is the sum of the base IDD or IPD and the additional current consumed when this peripheral is enabled. The peripheral Δ current can be determined by subtracting the base IDD or IPD current from this limit. Max values should be used when calculating total current consumption.

2: The power-down current in Sleep mode does not depend on the oscillator type. Power-down current is measured with the part in Sleep mode, with all I/O pins in high-impedance state and tied to VDD.

3: A/D oscillator source is FRC.

PRELIMINARY

 © 2011 Microchip Technology Inc.

25.4 DC Characteristics: PIC16(L)F1507-I/E

DC CHARACTERISTICS			Standard Operating Conditions (unless otherwise stated) Operating temperature -40°C ≤ TA ≤ +85°C for industrial -40°C ≤ TA ≤ +125°C for extended				
Param No.	**Sym.**	**Characteristic**	**Min.**	**Typ†**	**Max.**	**Units**	**Conditions**
	VIL	**Input Low Voltage**					
		I/O PORT:					
D030		with TTL buffer	—	—	0.8	V	4.5V ≤ VDD ≤ 5.5V
D030A			—	—	0.15 VDD	V	1.8V ≤ VDD ≤ 4.5V
D031		with Schmitt Trigger buffer	—	—	0.2 VDD	V	2.0V ≤ VDD ≤ 5.5V
D032		$\overline{MCLR}$	—	—	0.2 VDD	V	
	VIH	**Input High Voltage**					
		I/O ports:		—	—		
D040		with TTL buffer	2.0	—	—	V	4.5V ≤ VDD ≤ 5.5V
D040A			0.25 VDD + 0.8	—	—	V	1.8V ≤ VDD ≤ 4.5V
D041		with Schmitt Trigger buffer	0.8 VDD	—	—	V	2.0V ≤ VDD ≤ 5.5V
D042		$\overline{MCLR}$	0.8 VDD	—	—	V	
	IIL	**Input Leakage Current(1)**					
D060		I/O ports	—	± 5	± 125	nA	VSS ≤ VPIN ≤ VDD, Pin at high-impedance at 85°C
				± 5	± 1000	nA	125°C
D061		$\overline{MCLR}$(2)	—	± 50	± 200	nA	VSS ≤ VPIN ≤ VDD at 85°C
	IPUR	**Weak Pull-up Current**					
D070*			25 25	100 140	200 300	μA	VDD = 3.3V, VPIN = VSS VDD = 5.0V, VPIN = VSS
	VOL	**Output Low Voltage(3)**					
D080		I/O ports	—	—	0.6	V	IOL = 8mA, VDD = 5V IOL = 6mA, VDD = 3.3V IOL = 1.8mA, VDD = 1.8V
	VOH	**Output High Voltage(3)**					
D090		I/O ports	VDD - 0.7	—	—	V	IOH = 3.5mA, VDD = 5V IOH = 3mA, VDD = 3.3V IOH = 1mA, VDD = 1.8V
		Capacitive Loading Specs on Output Pins					
D101A*	CIO	All I/O pins	—	—	50	pF	

* These parameters are characterized but not tested.

† Data in "Typ" column is at 3.0V, 25°C unless otherwise stated. These parameters are for design guidance only and are not tested.

Note 1: Negative current is defined as current sourced by the pin.

2: The leakage current on the $\overline{MCLR}$ pin is strongly dependent on the applied voltage level. The specified levels represent normal operating conditions. Higher leakage current may be measured at different input voltages.

3: Including OSC2 in CLKOUT mode.

PRELIMINARY

25.5 Memory Programming Requirements

DC CHARACTERISTICS			Standard Operating Conditions (unless otherwise stated) Operating temperature -40°C ≤ TA ≤ +125°C				
Param No.	**Sym.**	**Characteristic**	**Min.**	**Typ†**	**Max.**	**Units**	**Conditions**
		Program Memory Programming Specifications					
D110	VIHH	Voltage on $\overline{MCLR}$/VPP pin	8.0	—	9.0	V	**(Note 2, Note 3)**
D111	IDDP	Supply Current during Programming	—	—	10	mA	
D112		VDD for Bulk Erase	2.7	—	VDD max.	V	
D113	VPEW	VDD for Write or Row Erase	VDD min.	—	VDD max.	V	
D114	IPPPGM	Current on $\overline{MCLR}$/VPP during Erase/ Write	—	—	1.0	mA	
D115	IDDPGM	Current on VDD during Erase/Write	—		5.0	mA	
		Program Flash Memory					
D121	EP	Cell Endurance	10K	—	—	E/W	-40°C to +85°C **(Note 1)**
D122	VPR	VDD for Read	VDD min.	—	VDD max.	V	
D123	TIW	Self-timed Write Cycle Time	—	2	2.5	ms	
D124	TRETD	Characteristic Retention	40	—	—	Year	Provided no other specifications are violated

† Data in "Typ" column is at 3.0V, 25°C unless otherwise stated. These parameters are for design guidance only and are not tested.

Note 1: Self-write and Block Erase.

2: Required only if single-supply programming is disabled.

3: The MPLAB® ICD 2 does not support variable VPP output. Circuitry to limit the MPLAB ICD 2 VPP voltage must be placed between the MPLAB ICD 2 and target system when programming or debugging with the MPLAB ICD 2.

PRELIMINARY

 © 2011 Microchip Technology Inc.

25.6 Thermal Considerations

Standard Operating Conditions (unless otherwise stated) Operating temperature -40°C ≤ TA ≤ +125°C					
Param No.	**Sym.**	**Characteristic**	**Typ.**	**Units**	**Conditions**
TH01	θJA	Thermal Resistance Junction to Ambient	TBD	°C/W	20-pin PDIP package
			TBD	°C/W	20-pin SOIC package
			89.3	°C/W	20-pin SSOP package
			TBD	°C/W	20-pin QFN 4X4mm package
TH02	θJC	Thermal Resistance Junction to Case	TBD	°C/W	20-pin PDIP package
			TBD	°C/W	20-pin SOIC package
			31.1	°C/W	20-pin SSOP package
			TBD	°C/W	20-pin QFN 4X4mm package
TH03	TJMAX	Maximum Junction Temperature	150	°C	
TH04	PD	Power Dissipation	—	W	PD = PINTERNAL + PI/O
TH05	PINTERNAL	Internal Power Dissipation	—	W	PINTERNAL = IDD x VDD(1)
TH06	PI/O	I/O Power Dissipation	—	W	PI/O = Σ (IOL * VOL) + Σ (IOH * (VDD - VOH))
TH07	PDER	Derated Power	—	W	PDER = PDMAX (TJ - TA)/θJA(2)

Legend: TBD = To Be Determined

Note 1: IDD is current to run the chip alone without driving any load on the output pins.

2: TA = Ambient Temperature

3: TJ = Junction Temperature

PRELIMINARY

25.7 Timing Parameter Symbology

The timing parameter symbols have been created with one of the following formats:

1. TppS2ppS
2. TppS

T			
F	Frequency	T	Time

Lowercase letters (pp) and their meanings:

pp			
cc	CCP1	osc	CLKIN
ck	CLKOUT	rd	$\overline{RD}$
cs	$\overline{CS}$	rw	$\overline{RD}$ or $\overline{WR}$
di	SDIx	sc	SCKx
do	SDO	ss	$\overline{SS}$
dt	Data in	t0	T0CKI
io	I/O PORT	t1	T1CKI
mc	$\overline{MCLR}$	wr	$\overline{WR}$

Uppercase letters and their meanings:

S			
F	Fall	P	Period
H	High	R	Rise
I	Invalid (High-impedance)	V	Valid
L	Low	Z	High-impedance

FIGURE 25-4: LOAD CONDITIONS

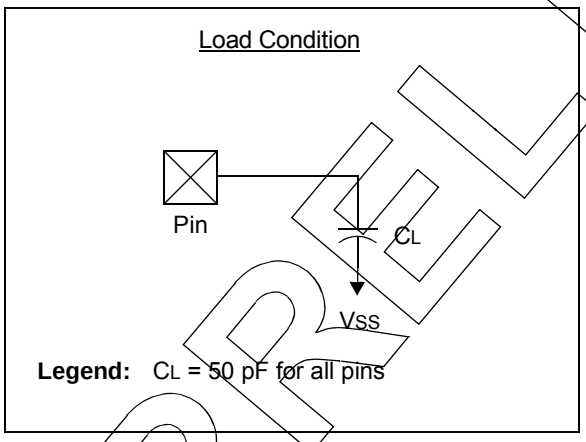

PRELIMINARY

 © 2011 Microchip Technology Inc.

25.8 AC Characteristics: PIC16(L)F1507-I/E

FIGURE 25-5: CLOCK TIMING

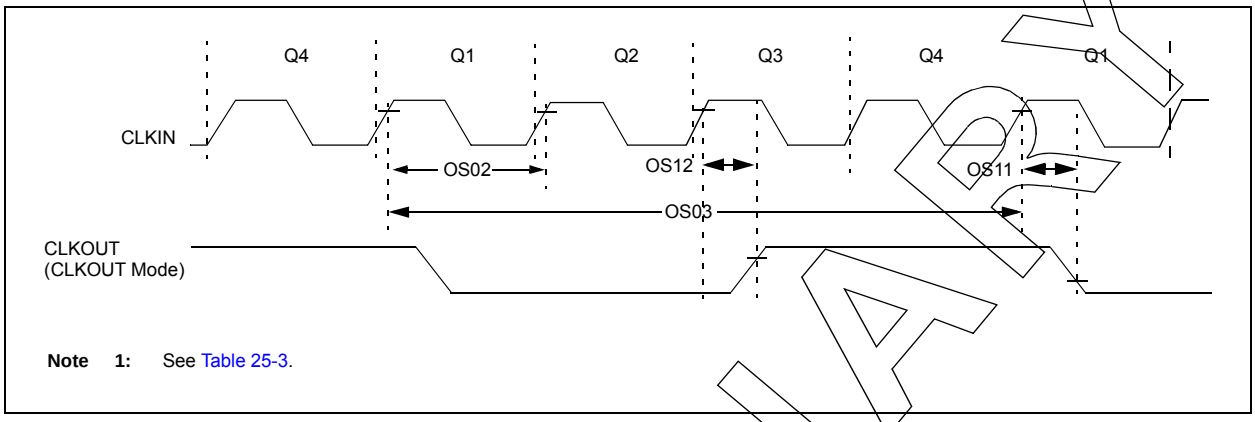

Note 1: See Table 25-3.

TABLE 25-1: CLOCK OSCILLATOR TIMING REQUIREMENTS

Standard Operating Conditions (unless otherwise stated) Operating temperature -40°C ≤ TA ≤ +125°C							
Param No.	**Sym.**	**Characteristic**	**Min.**	**Typ†**	**Max.**	**Units**	**Conditions**
OS01	FOSC	External CLKIN Frequency(1)	DC	—	0.5	MHz	EC Oscillator mode (low)
			DC	—	4	MHz	EC Oscillator mode (medium)
			DC	—	20	MHz	EC Oscillator mode (high)
OS02	TOSC	External CLKIN Period(1)	31.25	—	∞	ns	EC mode
OS03	TCY	Instruction Cycle Time(1)	125	—	DC	ns	TCY = FOSC/4

* These parameters are characterized but not tested.

† Data in "Typ" column is at 3.0V, 25°C unless otherwise stated. These parameters are for design guidance only and are not tested.

Note 1: Instruction cycle period (TCY) equals four times the input oscillator time base period. All specified values are based on characterization data for that particular oscillator type under standard operating conditions with the device executing code. Exceeding these specified limits may result in an unstable oscillator operation and/or higher than expected current consumption. All devices are tested to operate at "min" values with an external clock applied to CLKIN pin. When an external clock input is used, the "max" cycle time limit is "DC" (no clock) for all devices.

TABLE 25-2: OSCILLATOR PARAMETERS

Standard Operating Conditions (unless otherwise stated) Operating Temperature -40°C ≤ TA ≤ +125°C								
Param No.	**Sym.**	**Characteristic**	**Freq. Tolerance**	**Min.**	**Typ†**	**Max.**	**Units**	**Conditions**
OS08	HFOSC	Internal Calibrated HFINTOSC Frequency(1)	±10%	—	16.0	—	MHz	0°C ≤ TA ≤ +85°C
OS09	LFOSC	Internal LFINTOSC Frequency	—	—	31	—	kHz	-40°C ≤ TA ≤ +125°C
OS10*	TIOSC ST	HFINTOSC Wake-up from Sleep Start-up Time	—	—	5	8	µs	

* These parameters are characterized but not tested.

† Data in "Typ" column is at 3.0V, 25°C unless otherwise stated. These parameters are for design guidance only and are not tested.

Note 1: To ensure these oscillator frequency tolerances, VDD and VSS must be capacitively decoupled as close to the device as possible. 0.1 µF and 0.01 µF values in parallel are recommended.

PRELIMINARY

FIGURE 25-6: CLKOUT AND I/O TIMING

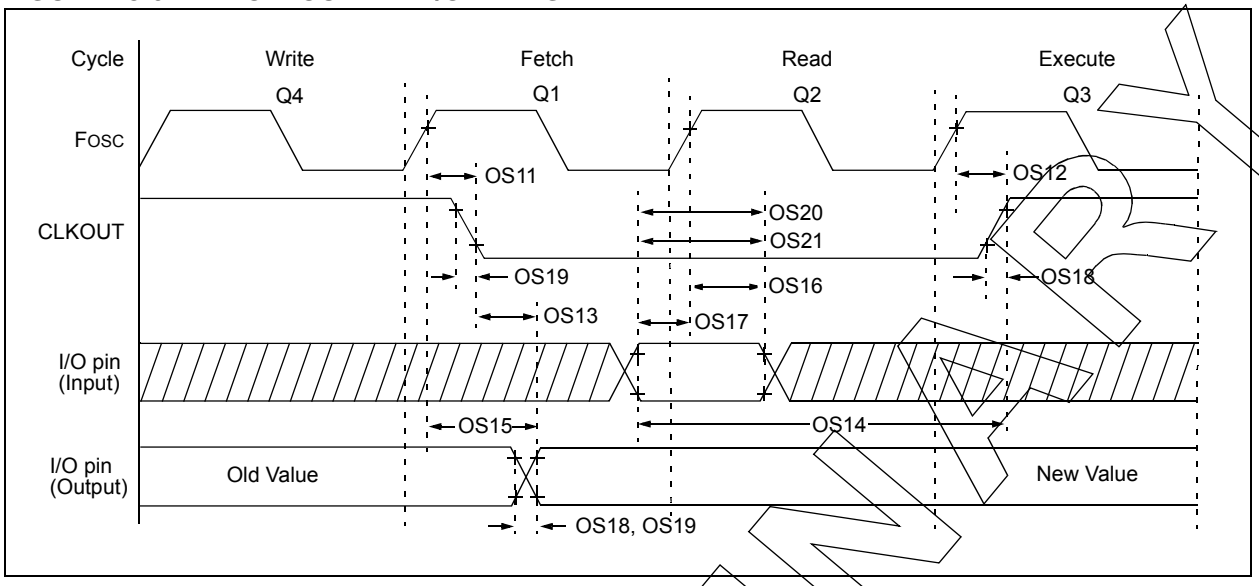

TABLE 25-3: CLKOUT AND I/O TIMING PARAMETERS

Standard Operating Conditions (unless otherwise stated) Operating Temperature -40°C ≤ TA ≤ +125°C							
Param No.	**Sym.**	**Characteristic**	**Min.**	**Typ†**	**Max.**	**Units**	**Conditions**
OS11	TosH2ckL	FOSC↑ to CLKOUT↓ (1)	—	—	70	ns	VDD = 3.3-5.0V
OS12	TosH2ckH	FOSC↑ to CLKOUT↑ (1)	—	—	72	ns	VDD = 3.3-5.0V
OS13	TckL2ioV	CLKOUT↓ to Port out valid(1)	—	—	20	ns	
OS14	TioV2ckH	Port input valid before CLKOUT↑(1)	TOSC + 200 ns	—	—	ns	
OS15	TosH2ioV	Fosc↑ (Q1 cycle) to Port out valid	—	50	70*	ns	VDD = 3.3-5.0V
OS16	TosH2ioI	Fosc↑ (Q2 cycle) to Port input invalid (I/O in hold time)	50	—	—	ns	VDD = 3.3-5.0V
OS17	TioV2osH	Port input valid to Fosc↑ (Q2 cycle) (I/O in setup time)	20	—	—	ns	
OS18*	TioR	Port output rise time(2)	— —	15 40	32 72	ns	VDD = 2.0V VDD = 5.0V
OS19*	TioF	Port output fall time(2)	— —	28 15	55 30	ns	VDD = 2.0V VDD = 5.0V
OS20*	Tinp	INT pin input high or low time	25	—	—	ns	
OS21*	Tioc	Interrupt-on-change new input level time	25	—	—	ns	

* These parameters are characterized but not tested.

† Data in "Typ" column is at 3.0V, 25°C unless otherwise stated.

Note 1: Measurements are taken in EC mode where CLKOUT output is 4 x TOSC.

PRELIMINARY

 © 2011 Microchip Technology Inc.

FIGURE 25-7: RESET, WATCHDOG TIMER, OSCILLATOR START-UP TIMER AND POWER-UP TIMER TIMING

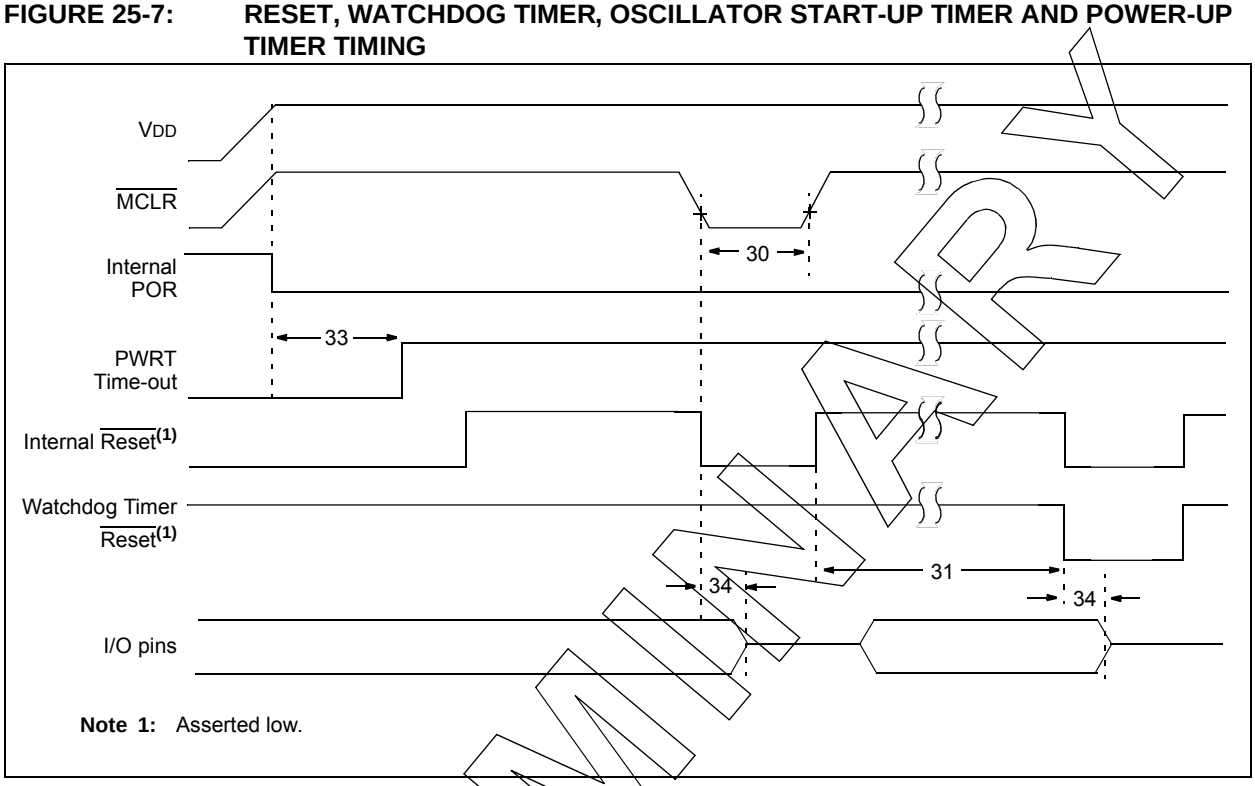

Note 1: Asserted low.

FIGURE 25-8: BROWN-OUT RESET TIMING AND CHARACTERISTICS

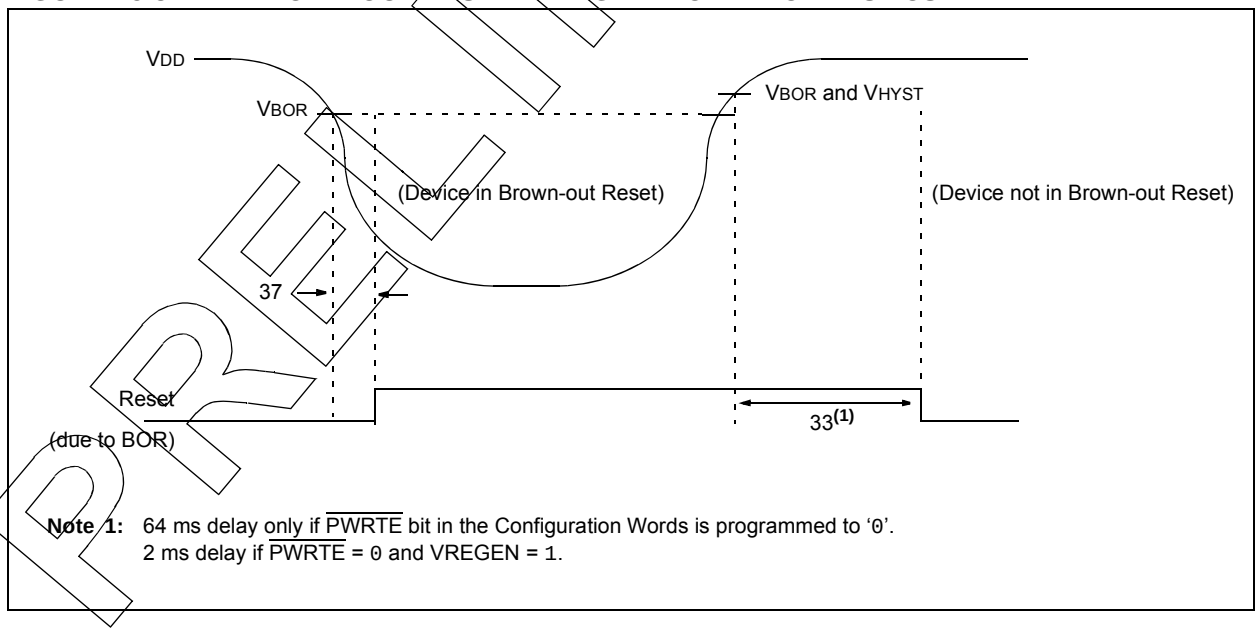

Note 1: 64 ms delay only if $\overline{\text{PWRTE}}$ bit in the Configuration Words is programmed to '0'.
2 ms delay if $\overline{\text{PWRTE}}$ = 0 and VREGEN = 1.

PRELIMINARY

TABLE 25-4: RESET, WATCHDOG TIMER, OSCILLATOR START-UP TIMER, POWER-UP TIMER AND BROWN-OUT RESET PARAMETERS

Standard Operating Conditions (unless otherwise stated) Operating Temperature -40°C ≤ TA ≤ +125°C							
Param No.	**Sym.**	**Characteristic**	**Min.**	**Typ†**	**Max.**	**Units**	**Conditions**
30	TMCL	$\overline{MCLR}$ Pulse Width (low)	2 5	— —	— —	μs μs	VDD = 3.3-5V, -40°C to +85°C VDD = 3.3-5V
31	TWDTLP	Low-Power Watchdog Timer Time-out Period	10	16	27	ms	VDD = 3.3V-5V, 1:16 Prescaler used
33*	TPWRT	Power-up Timer Period, $\overline{PWRTE}$ = 0	40	65	140	ms	
34*	TIOZ	I/O high-impedance from $\overline{MCLR}$ Low or Watchdog Timer Reset	—	—	2.0	μs	
35	VBOR	Brown-out Reset Voltage	2.50 2.30 1.8	2.70 2.40 1.90	2.80 2.50 2.00	V V V	BORV = 2.7V BORV = 2.4V (PIC16F1507) BORV = 1.9V (PIC16LF1507)
36*	VHYST	Brown-out Reset Hysteresis	0	25	50	mV	-40°C to +85°C
37*	TBORDC	Brown-out Reset DC Response Time	1	3	5	μs	VDD ≤ VBOR

* These parameters are characterized but not tested.

† Data in "Typ" column is at 3.0V, 25°C unless otherwise stated. These parameters are for design guidance only and are not tested.

Note 1: To ensure these voltage tolerances, VDD and VSS must be capacitively decoupled as close to the device as possible. 0.1 μF and 0.01 μF values in parallel are recommended.

FIGURE 25-9: TIMER0 AND TIMER1 EXTERNAL CLOCK TIMINGS

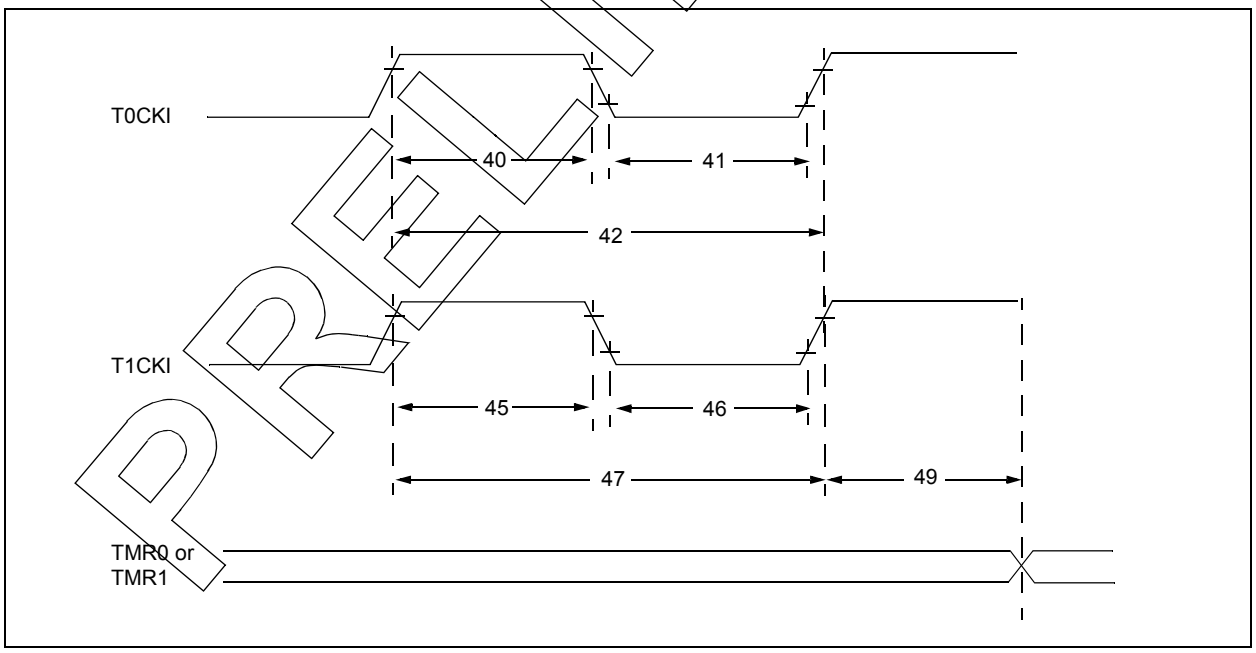

PRELIMINARY

 © 2011 Microchip Technology Inc.

TABLE 25-5: TIMER0 AND TIMER1 EXTERNAL CLOCK REQUIREMENTS

Standard Operating Conditions (unless otherwise stated) Operating Temperature -40°C ≤ TA ≤ +125°C								
Param No.	**Sym.**	**Characteristic**		**Min.**	**Typ†**	**Max.**	**Units**	**Conditions**
40*	TT0H	T0CKI High Pulse Width	No Prescaler	0.5 TCY + 20	—	—	ns	
			With Prescaler	10	—	—	ns	
41*	TT0L	T0CKI Low Pulse Width	No Prescaler	0.5 TCY + 20	—	—	ns	
			With Prescaler	10	—	—	ns	
42*	TT0P	T0CKI Period		Greater of: 20 or TCY + 40 / N	—	—	ns	N = prescale value (2, 4, ..., 256)
45*	TT1H	T1CKI High Time	Synchronous, No Prescaler	0.5 TCY + 20	—	—	ns	
			Synchronous, with Prescaler	15	—	—	ns	
			Asynchronous	30	—	—	ns	
46*	TT1L	T1CKI Low Time	Synchronous, No Prescaler	0.5 TCY + 20	—	—	ns	
			Synchronous, with Prescaler	15	—	—	ns	
			Asynchronous	30	—	—	ns	
47*	TT1P	T1CKI Input Period	Synchronous	Greater of: 30 or TCY + 40 / N	—	—	ns	N = prescale value (1, 2, 4, 8)
			Asynchronous	60	—	—	ns	
49*	TCKEZTMR1	Delay from External Clock Edge to Timer Increment		2 TOSC	—	7 TOSC	—	Timers in Sync mode

* These parameters are characterized but not tested.

† Data in "Typ" column is at 3.0V, 25°C unless otherwise stated. These parameters are for design guidance only and are not tested.

Note 1: For proper operation, the minimum value of the ADC positive voltage reference must be 1.8V or greater. When selecting the FVR or the VREF+ pin as the source of the ADC positive voltage reference, be aware that the voltage must be 1.8V or greater.

TABLE 25-6: PIC16(L)F1507 A/D CONVERTER (ADC) CHARACTERISTICS:

Standard Operating Conditions (unless otherwise stated) Operating temperature -40°C ≤ TA ≤ +125°C							
Param No.	**Sym.**	**Characteristic**	**Min.**	**Typ†**	**Max.**	**Units**	**Conditions**
AD01	NR	Resolution	—	—	10	bit	
AD02	EIL	Integral Error	—	—	±1.7	LSb	VREF = 5.0V
AD03	EDL	Differential Error	—	—	±1	LSb	No missing codes VREF = 5.0V
AD04	EOFF	Offset Error	—	—	±2.5	LSb	VREF = 5.0V
AD05	EGN	Gain Error	—	—	±2.0	LSb	VREF = 5.0V
AD06	VREF	Reference Voltage(3)	1.8	—	VDD	V	VREF = (VREF+ minus VREF-) (**NOTE 5**)
AD07	VAIN	Full-Scale Range	VSS	—	VREF	V	
AD08	ZAIN	Recommended Impedance of Analog Voltage Source	—	—	10	kΩ	Can go higher if external 0.01µF capacitor is present on input pin.

* These parameters are characterized but not tested.

† Data in "Typ" column is at 3.0V, 25°C unless otherwise stated. These parameters are for design guidance only and are not tested.

Note 1: Total Absolute Error includes integral, differential, offset and gain errors.

2: The A/D conversion result never decreases with an increase in the input voltage and has no missing codes.

3: ADC VREF is from external VREF+ pin, VDD pin, whichever is selected as reference input.

4: When ADC is off, it will not consume any current other than leakage current. The power-down current specification includes any such leakage from the ADC module.

5: FVR voltage selected must be 2.048V or 4.096V.

Preliminary

TABLE 25-7: PIC16(L)F1507 A/D CONVERSION REQUIREMENTS

Standard Operating Conditions (unless otherwise stated) Operating temperature -40°C ≤ TA ≤ +125°C							
Param No.	**Sym.**	**Characteristic**	**Min.**	**Typ†**	**Max.**	**Units**	**Conditions**
AD130*	TAD	A/D Clock Period	1.0	—	9.0	µs	TOSC-based
		A/D Internal FRC Oscillator Period	1.0	1.6	6.0	µs	ADCS<1:0> = 11 (ADFRC mode)
AD131	TCNV	Conversion Time (not including Acquisition Time)(1)	—	11	—	TAD	Set GO/DONE bit to conversion complete
AD132*	TACQ	Acquisition Time	—	5.0	—	µs	

* These parameters are characterized but not tested.

† Data in "Typ" column is at 3.0V, 25°C unless otherwise stated. These parameters are for design guidance only and are not tested.

Note 1: The ADRES register may be read on the following TCY cycle.

FIGURE 25-10: PIC16(L)F1507 A/D CONVERSION TIMING (NORMAL MODE)

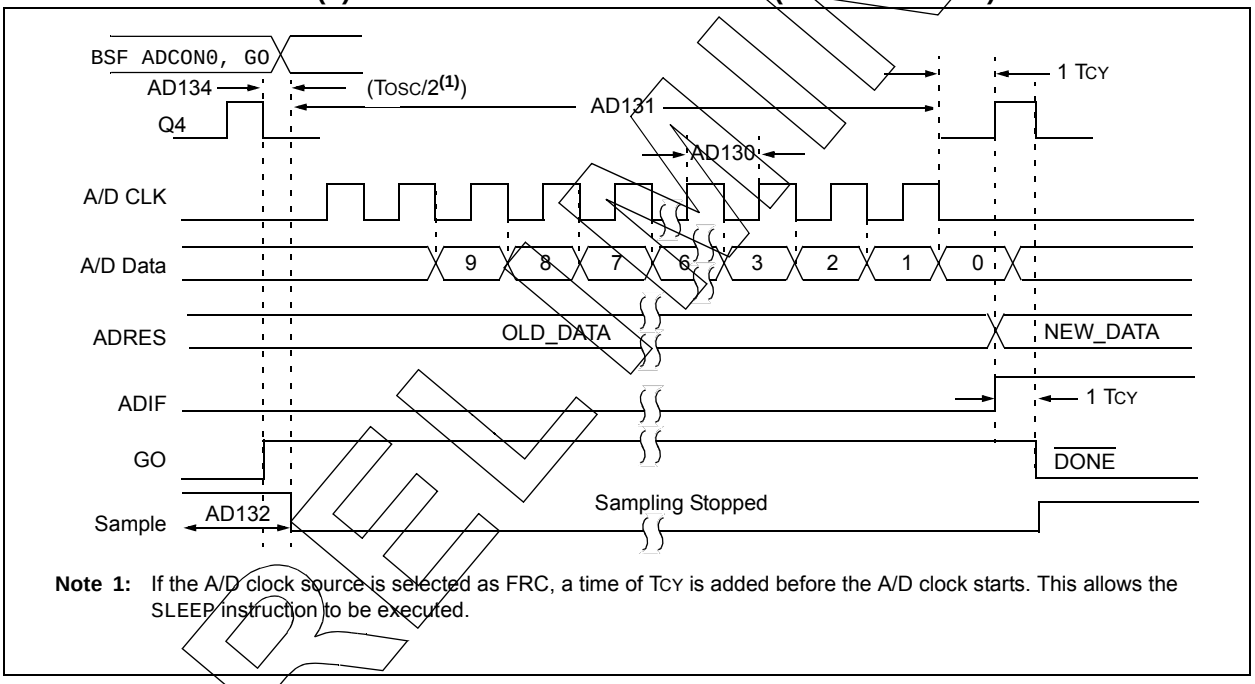

Note 1: If the A/D clock source is selected as FRC, a time of TCY is added before the A/D clock starts. This allows the SLEEP instruction to be executed.

PRELIMINARY

 © 2011 Microchip Technology Inc.

FIGURE 25-11: PIC16(L)F1507 A/D CONVERSION TIMING (SLEEP MODE)

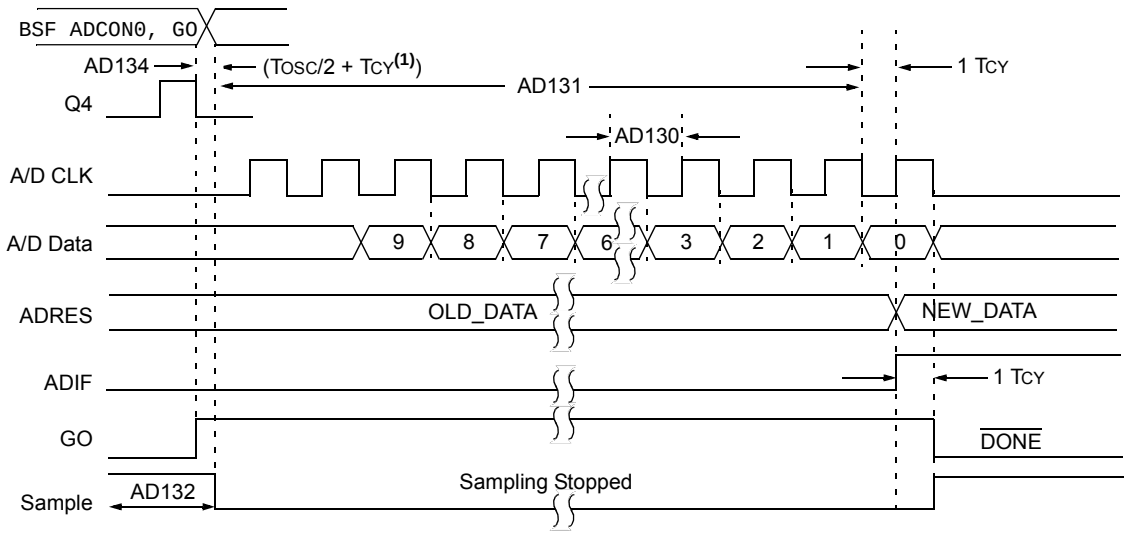

Note 1: If the A/D clock source is selected as FRC, a time of TCY is added before the A/D clock starts. This allows the SLEEP instruction to be executed.

26.0 DC AND AC CHARACTERISTICS GRAPHS AND CHARTS

Graphs and charts are not available at this time.

 © 2011 Microchip Technology Inc.

NOTES:

27.0 DEVELOPMENT SUPPORT

The PIC® microcontrollers and dsPIC® digital signal controllers are supported with a full range of software and hardware development tools:

- Integrated Development Environment
  - MPLAB® IDE Software
- Compilers/Assemblers/Linkers
  - MPLAB C Compiler for Various Device Families
  - HI-TECH C for Various Device Families
  - MPASM™ Assembler
  - MPLINK™ Object Linker/ MPLIB™ Object Librarian
  - MPLAB Assembler/Linker/Librarian for Various Device Families
- Simulators
  - MPLAB SIM Software Simulator
- Emulators
  - MPLAB REAL ICE™ In-Circuit Emulator
- In-Circuit Debuggers
  - MPLAB ICD 3
  - PICkit™ 3 Debug Express
- Device Programmers
  - PICkit™ 2 Programmer
  - MPLAB PM3 Device Programmer
- Low-Cost Demonstration/Development Boards, Evaluation Kits, and Starter Kits

27.1 MPLAB Integrated Development Environment Software

The MPLAB IDE software brings an ease of software development previously unseen in the 8/16/32-bit microcontroller market. The MPLAB IDE is a Windows® operating system-based application that contains:

- A single graphical interface to all debugging tools
  - Simulator
  - Programmer (sold separately)
  - In-Circuit Emulator (sold separately)
  - In-Circuit Debugger (sold separately)
- A full-featured editor with color-coded context
- A multiple project manager
- Customizable data windows with direct edit of contents
- High-level source code debugging
- Mouse over variable inspection
- Drag and drop variables from source to watch windows
- Extensive on-line help
- Integration of select third party tools, such as IAR C Compilers

The MPLAB IDE allows you to:

- Edit your source files (either C or assembly)
- One-touch compile or assemble, and download to emulator and simulator tools (automatically updates all project information)
- Debug using:
  - Source files (C or assembly)
  - Mixed C and assembly
  - Machine code

MPLAB IDE supports multiple debugging tools in a single development paradigm, from the cost-effective simulators, through low-cost in-circuit debuggers, to full-featured emulators. This eliminates the learning curve when upgrading to tools with increased flexibility and power.

 © 2011 Microchip Technology Inc.

27.2 MPLAB C Compilers for Various Device Families

The MPLAB C Compiler code development systems are complete ANSI C compilers for Microchip's PIC18, PIC24 and PIC32 families of microcontrollers and the dsPIC30 and dsPIC33 families of digital signal controllers. These compilers provide powerful integration capabilities, superior code optimization and ease of use.

For easy source level debugging, the compilers provide symbol information that is optimized to the MPLAB IDE debugger.

27.3 HI-TECH C for Various Device Families

The HI-TECH C Compiler code development systems are complete ANSI C compilers for Microchip's PIC family of microcontrollers and the dsPIC family of digital signal controllers. These compilers provide powerful integration capabilities, omniscient code generation and ease of use.

For easy source level debugging, the compilers provide symbol information that is optimized to the MPLAB IDE debugger.

The compilers include a macro assembler, linker, preprocessor, and one-step driver, and can run on multiple platforms.

27.4 MPASM Assembler

The MPASM Assembler is a full-featured, universal macro assembler for PIC10/12/16/18 MCUs.

The MPASM Assembler generates relocatable object files for the MPLINK Object Linker, Intel® standard HEX files, MAP files to detail memory usage and symbol reference, absolute LST files that contain source lines and generated machine code and COFF files for debugging.

The MPASM Assembler features include:

- Integration into MPLAB IDE projects
- User-defined macros to streamline assembly code
- Conditional assembly for multi-purpose source files
- Directives that allow complete control over the assembly process

27.5 MPLINK Object Linker/ MPLIB Object Librarian

The MPLINK Object Linker combines relocatable objects created by the MPASM Assembler and the MPLAB C18 C Compiler. It can link relocatable objects from precompiled libraries, using directives from a linker script.

The MPLIB Object Librarian manages the creation and modification of library files of precompiled code. When a routine from a library is called from a source file, only the modules that contain that routine will be linked in with the application. This allows large libraries to be used efficiently in many different applications.

The object linker/library features include:

- Efficient linking of single libraries instead of many smaller files
- Enhanced code maintainability by grouping related modules together
- Flexible creation of libraries with easy module listing, replacement, deletion and extraction

27.6 MPLAB Assembler, Linker and Librarian for Various Device Families

MPLAB Assembler produces relocatable machine code from symbolic assembly language for PIC24, PIC32 and dsPIC devices. MPLAB C Compiler uses the assembler to produce its object file. The assembler generates relocatable object files that can then be archived or linked with other relocatable object files and archives to create an executable file. Notable features of the assembler include:

- Support for the entire device instruction set
- Support for fixed-point and floating-point data
- Command line interface
- Rich directive set
- Flexible macro language
- MPLAB IDE compatibility

27.7 MPLAB SIM Software Simulator

The MPLAB SIM Software Simulator allows code development in a PC-hosted environment by simulating the PIC MCUs and dsPIC® DSCs on an instruction level. On any given instruction, the data areas can be examined or modified and stimuli can be applied from a comprehensive stimulus controller. Registers can be logged to files for further run-time analysis. The trace buffer and logic analyzer display extend the power of the simulator to record and track program execution, actions on I/O, most peripherals and internal registers.

The MPLAB SIM Software Simulator fully supports symbolic debugging using the MPLAB C Compilers, and the MPASM and MPLAB Assemblers. The software simulator offers the flexibility to develop and debug code outside of the hardware laboratory environment, making it an excellent, economical software development tool.

27.8 MPLAB REAL ICE In-Circuit Emulator System

MPLAB REAL ICE In-Circuit Emulator System is Microchip's next generation high-speed emulator for Microchip Flash DSC and MCU devices. It debugs and programs PIC® Flash MCUs and dsPIC® Flash DSCs with the easy-to-use, powerful graphical user interface of the MPLAB Integrated Development Environment (IDE), included with each kit.

The emulator is connected to the design engineer's PC using a high-speed USB 2.0 interface and is connected to the target with either a connector compatible with in-circuit debugger systems (RJ11) or with the new high-speed, noise tolerant, Low-Voltage Differential Signal (LVDS) interconnection (CAT5).

The emulator is field upgradable through future firmware downloads in MPLAB IDE. In upcoming releases of MPLAB IDE, new devices will be supported, and new features will be added. MPLAB REAL ICE offers significant advantages over competitive emulators including low-cost, full-speed emulation, run-time variable watches, trace analysis, complex breakpoints, a ruggedized probe interface and long (up to three meters) interconnection cables.

27.9 MPLAB ICD 3 In-Circuit Debugger System

MPLAB ICD 3 In-Circuit Debugger System is Microchip's most cost effective high-speed hardware debugger/programmer for Microchip Flash Digital Signal Controller (DSC) and microcontroller (MCU) devices. It debugs and programs PIC® Flash microcontrollers and dsPIC® DSCs with the powerful, yet easy-to-use graphical user interface of MPLAB Integrated Development Environment (IDE).

The MPLAB ICD 3 In-Circuit Debugger probe is connected to the design engineer's PC using a high-speed USB 2.0 interface and is connected to the target with a connector compatible with the MPLAB ICD 2 or MPLAB REAL ICE systems (RJ-11). MPLAB ICD 3 supports all MPLAB ICD 2 headers.

27.10 PICkit 3 In-Circuit Debugger/ Programmer and PICkit 3 Debug Express

The MPLAB PICkit 3 allows debugging and programming of PIC® and dsPIC® Flash microcontrollers at a most affordable price point using the powerful graphical user interface of the MPLAB Integrated Development Environment (IDE). The MPLAB PICkit 3 is connected to the design engineer's PC using a full speed USB interface and can be connected to the target via an Microchip debug (RJ-11) connector (compatible with MPLAB ICD 3 and MPLAB REAL ICE). The connector uses two device I/O pins and the reset line to implement in-circuit debugging and In-Circuit Serial Programming™.

The PICkit 3 Debug Express include the PICkit 3, demo board and microcontroller, hookup cables and CDROM with user's guide, lessons, tutorial, compiler and MPLAB IDE software.

 © 2011 Microchip Technology Inc.

27.11 PICkit 2 Development Programmer/Debugger and PICkit 2 Debug Express

The PICkit™ 2 Development Programmer/Debugger is a low-cost development tool with an easy to use interface for programming and debugging Microchip's Flash families of microcontrollers. The full featured Windows® programming interface supports baseline (PIC10F, PIC12F5xx, PIC16F5xx), midrange (PIC12F6xx, PIC16F), PIC18F, PIC24, dsPIC30, dsPIC33, and PIC32 families of 8-bit, 16-bit, and 32-bit microcontrollers, and many Microchip Serial EEPROM products. With Microchip's powerful MPLAB Integrated Development Environment (IDE) the PICkit™ 2 enables in-circuit debugging on most PIC® microcontrollers. In-Circuit-Debugging runs, halts and single steps the program while the PIC microcontroller is embedded in the application. When halted at a breakpoint, the file registers can be examined and modified.

The PICkit 2 Debug Express include the PICkit 2, demo board and microcontroller, hookup cables and CDROM with user's guide, lessons, tutorial, compiler and MPLAB IDE software.

27.12 MPLAB PM3 Device Programmer

The MPLAB PM3 Device Programmer is a universal, CE compliant device programmer with programmable voltage verification at V_{DDMIN} and V_{DDMAX} for maximum reliability. It features a large LCD display (128 x 64) for menus and error messages and a modular, detachable socket assembly to support various package types. The ICSP™ cable assembly is included as a standard item. In Stand-Alone mode, the MPLAB PM3 Device Programmer can read, verify and program PIC devices without a PC connection. It can also set code protection in this mode. The MPLAB PM3 connects to the host PC via an RS-232 or USB cable. The MPLAB PM3 has high-speed communications and optimized algorithms for quick programming of large memory devices and incorporates an MMC card for file storage and data applications.

27.13 Demonstration/Development Boards, Evaluation Kits, and Starter Kits

A wide variety of demonstration, development and evaluation boards for various PIC MCUs and dsPIC DSCs allows quick application development on fully functional systems. Most boards include prototyping areas for adding custom circuitry and provide application firmware and source code for examination and modification.

The boards support a variety of features, including LEDs, temperature sensors, switches, speakers, RS-232 interfaces, LCD displays, potentiometers and additional EEPROM memory.

The demonstration and development boards can be used in teaching environments, for prototyping custom circuits and for learning about various microcontroller applications.

In addition to the PICDEM™ and dsPICDEM™ demonstration/development board series of circuits, Microchip has a line of evaluation kits and demonstration software for analog filter design, KEELOQ® security ICs, CAN, IrDA®, PowerSmart battery management, SEEVAL® evaluation system, Sigma-Delta ADC, flow rate sensing, plus many more.

Also available are starter kits that contain everything needed to experience the specified device. This usually includes a single application and debug capability, all on one board.

Check the Microchip web page (www.microchip.com) for the complete list of demonstration, development and evaluation kits.

28.0 PACKAGING INFORMATION

28.1 Package Marking Information

20-Lead PDIP (300 mil)

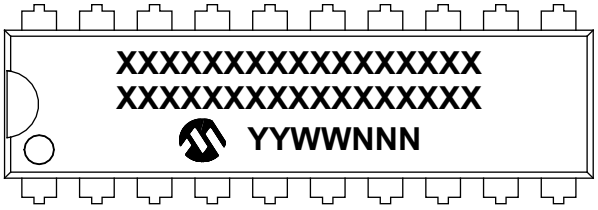

Example

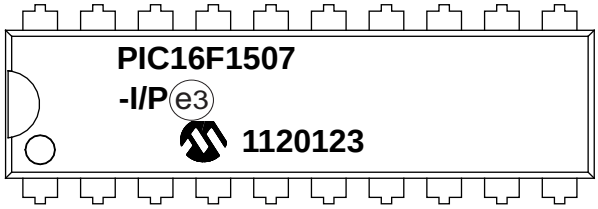

20-Lead SOIC (7.50 mm)

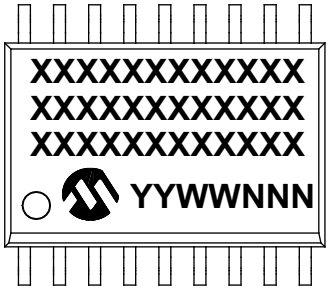

Example

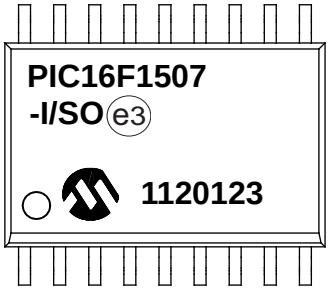

Legend:	XX...X	Customer-specific information
	Y	Year code (last digit of calendar year)
	YY	Year code (last 2 digits of calendar year)
	WW	Week code (week of January 1 is week ‘01’)
	NNN	Alphanumeric traceability code
	(e3)	Pb-free JEDEC designator for Matte Tin (Sn)
	*	This package is Pb-free. The Pb-free JEDEC designator ((e3)) can be found on the outer packaging for this package.

Note: In the event the full Microchip part number cannot be marked on one line, it will be carried over to the next line, thus limiting the number of available characters for customer-specific information.

***** Standard PICmicro® device marking consists of Microchip part number, year code, week code and traceability code. For PICmicro device marking beyond this, certain price adders apply. Please check with your Microchip Sales Office. For QTP devices, any special marking adders are included in QTP price.

 © 2011 Microchip Technology Inc.

28.2 Package Marking Information

20-Lead SSOP (5.30 mm)

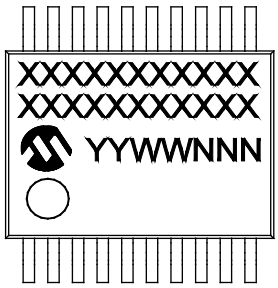

Example

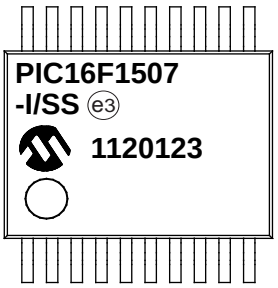

20-Lead QFN (4x4x0.9 mm)

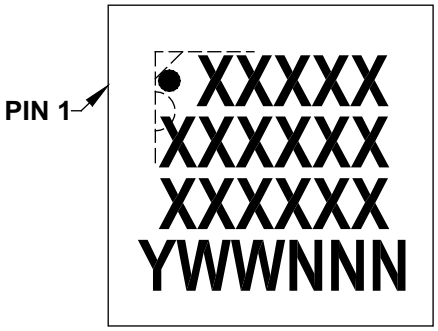

Example

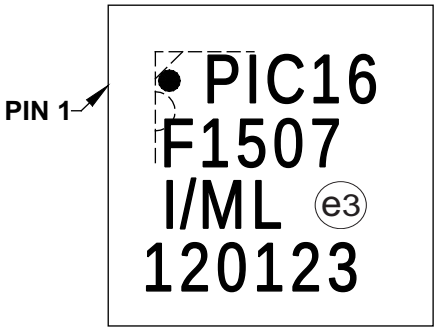

Legend:	XX...X	Customer-specific information
	Y	Year code (last digit of calendar year)
	YY	Year code (last 2 digits of calendar year)
	WW	Week code (week of January 1 is week '01')
	NNN	Alphanumeric traceability code
	(e3)	Pb-free JEDEC designator for Matte Tin (Sn)
	*	This package is Pb-free. The Pb-free JEDEC designator ((e3)) can be found on the outer packaging for this package.

Note: In the event the full Microchip part number cannot be marked on one line, it will be carried over to the next line, thus limiting the number of available characters for customer-specific information.

***** Standard PICmicro® device marking consists of Microchip part number, year code, week code and traceability code. For PICmicro device marking beyond this, certain price adders apply. Please check with your Microchip Sales Office. For QTP devices, any special marking adders are included in QTP price.

28.3 Package Details

The following sections give the technical details of the packages.

20-Lead Plastic Dual In-Line (P) – 300 mil Body [PDIP]

Note: For the most current package drawings, please see the Microchip Packaging Specification located at http://www.microchip.com/packaging

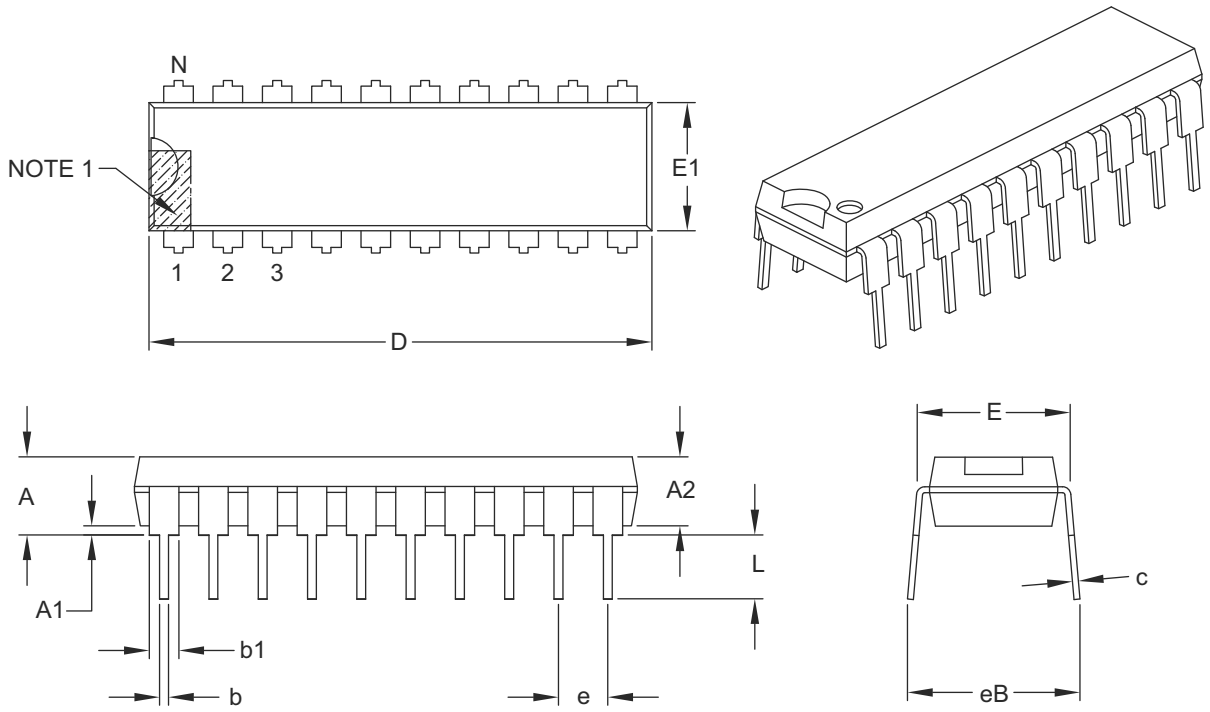

Units		INCHES		
Dimension Limits		MIN	NOM	MAX
Number of Pins	N		20	
Pitch	e		.100 BSC	
Top to Seating Plane	A	–	–	.210
Molded Package Thickness	A2	.115	.130	.195
Base to Seating Plane	A1	.015	–	–
Shoulder to Shoulder Width	E	.300	.310	.325
Molded Package Width	E1	.240	.250	.280
Overall Length	D	.980	1.030	1.060
Tip to Seating Plane	L	.115	.130	.150
Lead Thickness	c	.008	.010	.015
Upper Lead Width	b1	.045	.060	.070
Lower Lead Width	b	.014	.018	.022
Overall Row Spacing §	eB	–	–	.430

Notes:

1. Pin 1 visual index feature may vary, but must be located within the hatched area.
2. § Significant Characteristic.
3. Dimensions D and E1 do not include mold flash or protrusions. Mold flash or protrusions shall not exceed .010" per side.
4. Dimensioning and tolerancing per ASME Y14.5M.

   BSC: Basic Dimension. Theoretically exact value shown without tolerances.

Microchip Technology Drawing C04-019B

© 2011 Microchip Technology Inc.

20-Lead Plastic Small Outline (SO) - Wide, 7.50 mm Body [SOIC]

Note: For the most current package drawings, please see the Microchip Packaging Specification located at http://www.microchip.com/packaging

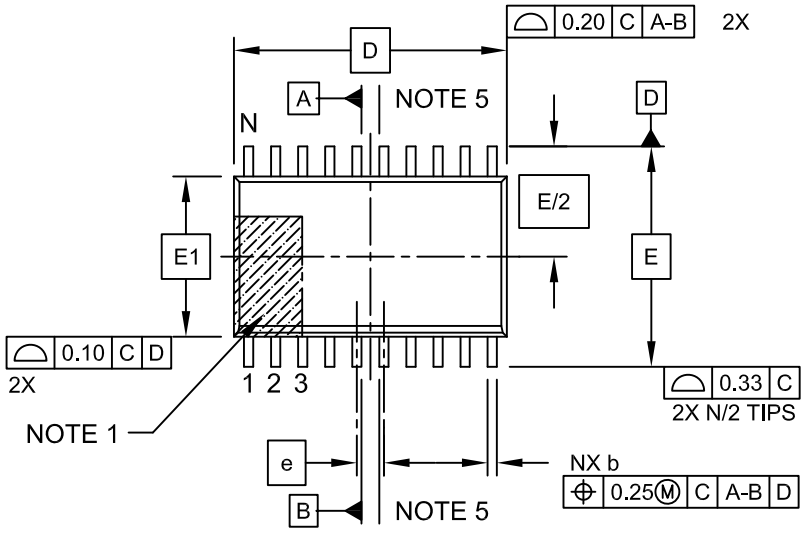

TOP VIEW

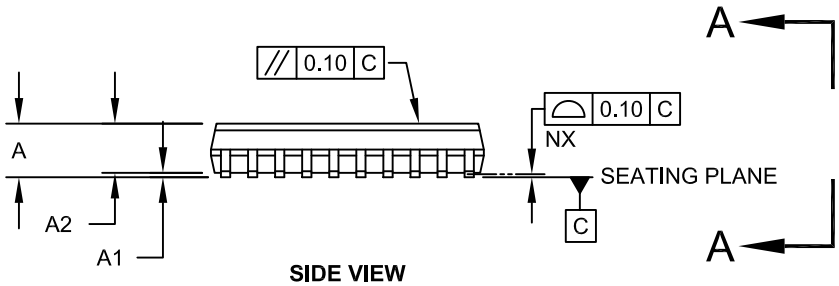

SIDE VIEW

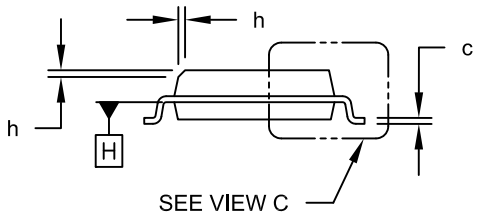

VIEW A-A

Microchip Technology Drawing C04-094C Sheet 1 of 2

20-Lead Plastic Small Outline (SO) - Wide, 7.50 mm Body [SOIC]

Note: For the most current package drawings, please see the Microchip Packaging Specification located at http://www.microchip.com/packaging

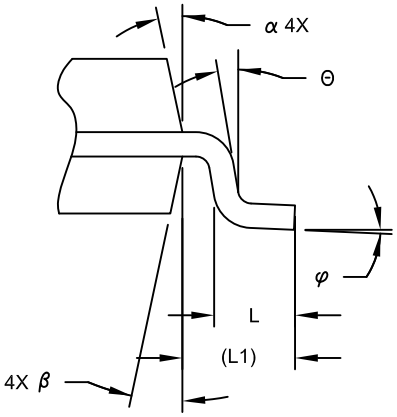

VIEW C

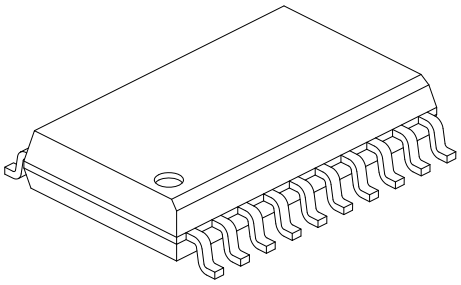

Units		MILLIMETERS		
Dimension Limits		MIN	NOM	MAX
Number of Pins	N		20	
Pitch	e		1.27 BSC	
Overall Height	A	-	-	2.65
Molded Package Thickness	A2	2.05	-	-
Standoff §	A1	0.10	-	0.30
Overall Width	E		10.30 BSC	
Molded Package Width	E1		7.50 BSC	
Overall Length	D		12.80 BSC	
Chamfer (Optional)	h	0.25	-	0.75
Foot Length	L	0.40	-	1.27
Footprint	L1		1.40 REF	
Lead Angle	Θ	0°	-	-
Foot Angle	φ	0°	-	8°
Lead Thickness	c	0.20	-	0.33
Lead Width	b	0.31	-	0.51
Mold Draft Angle Top	α	5°	-	15°
Mold Draft Angle Bottom	β	5°	-	15°

Notes:

1. Pin 1 visual index feature may vary, but must be located within the hatched area.
2. § Significant Characteristic
3. Dimension D does not include mold flash, protrusions or gate burrs, which shall not exceed 0.15 mm per end. Dimension E1 does not include interlead flash or protrusion, which shall not exceed 0.25 mm per side.
4. Dimensioning and tolerancing per ASME Y14.5M
   BSC: Basic Dimension. Theoretically exact value shown without tolerances.
   REF: Reference Dimension, usually without tolerance, for information purposes only.
5. Datums A & B to be determined at Datum H.

Microchip Technology Drawing No. C04-094C Sheet 2 of 2

 © 2011 Microchip Technology Inc.

20-Lead Plastic Small Outline (SO) - Wide, 7.50 mm Body [SOIC]

Note: For the most current package drawings, please see the Microchip Packaging Specification located at http://www.microchip.com/packaging

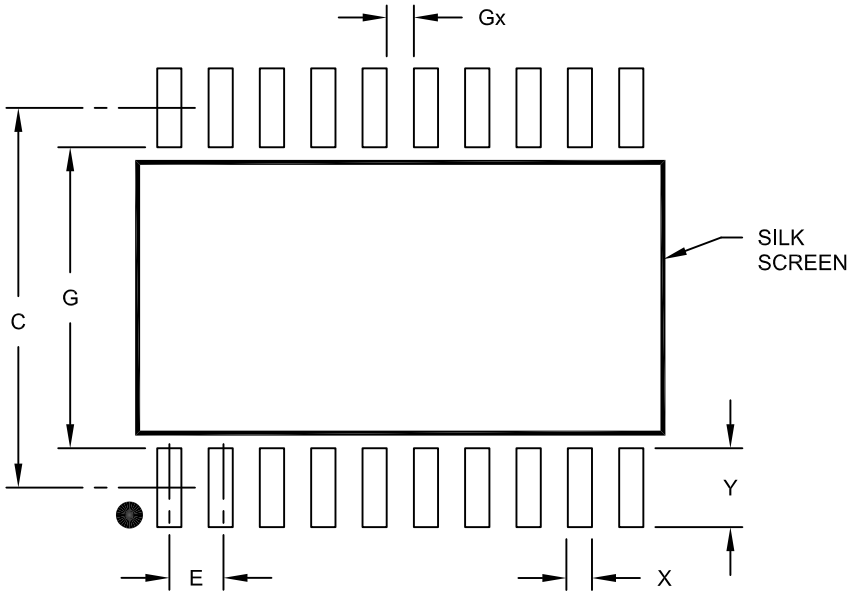

RECOMMENDED LAND PATTERN

Units		MILLIMETERS		
Dimension Limits		MIN	NOM	MAX
Contact Pitch	E		1.27 BSC	
Contact Pad Spacing	C		9.40	
Contact Pad Width (X20)	X			0.60
Contact Pad Length (X20)	Y			1.95
Distance Between Pads	Gx	0.67		
Distance Between Pads	G	7.45		

Notes:

1. Dimensioning and tolerancing per ASME Y14.5M

BSC: Basic Dimension. Theoretically exact value shown without tolerances.

Microchip Technology Drawing No. C04-2094A

20-Lead Plastic Shrink Small Outline (SS) – 5.30 mm Body [SSOP]

Note: For the most current package drawings, please see the Microchip Packaging Specification located at http://www.microchip.com/packaging

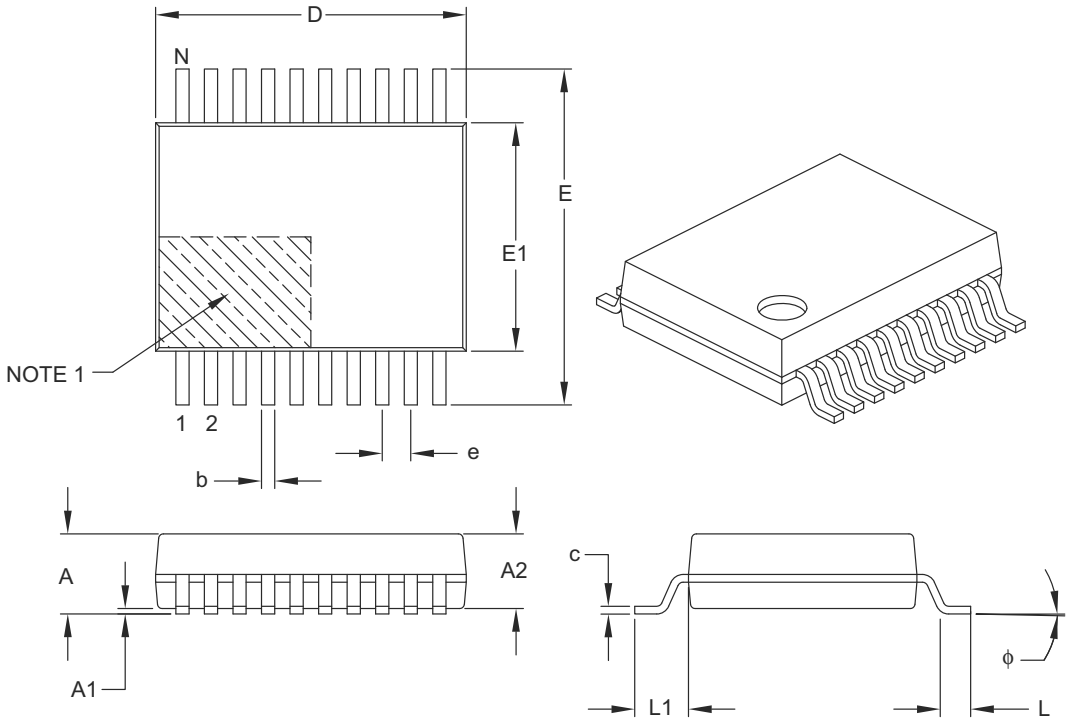

Units		MILLIMETERS		
Dimension Limits		MIN	NOM	MAX
Number of Pins	N		20	
Pitch	e		0.65 BSC	
Overall Height	A	–	–	2.00
Molded Package Thickness	A2	1.65	1.75	1.85
Standoff	A1	0.05	–	–
Overall Width	E	7.40	7.80	8.20
Molded Package Width	E1	5.00	5.30	5.60
Overall Length	D	6.90	7.20	7.50
Foot Length	L	0.55	0.75	0.95
Footprint	L1		1.25 REF	
Lead Thickness	c	0.09	–	0.25
Foot Angle	ϕ	0°	4°	8°
Lead Width	b	0.22	–	0.38

Notes:

1. Pin 1 visual index feature may vary, but must be located within the hatched area.
2. Dimensions D and E1 do not include mold flash or protrusions. Mold flash or protrusions shall not exceed 0.20 mm per side.
3. Dimensioning and tolerancing per ASME Y14.5M.

BSC: Basic Dimension. Theoretically exact value shown without tolerances.

REF: Reference Dimension, usually without tolerance, for information purposes only.

Microchip Technology Drawing C04-072B

 © 2011 Microchip Technology Inc.

20-Lead Plastic Shrink Small Outline (SS) - 5.30 mm Body [SSOP]

Note: For the most current package drawings, please see the Microchip Packaging Specification located at http://www.microchip.com/packaging

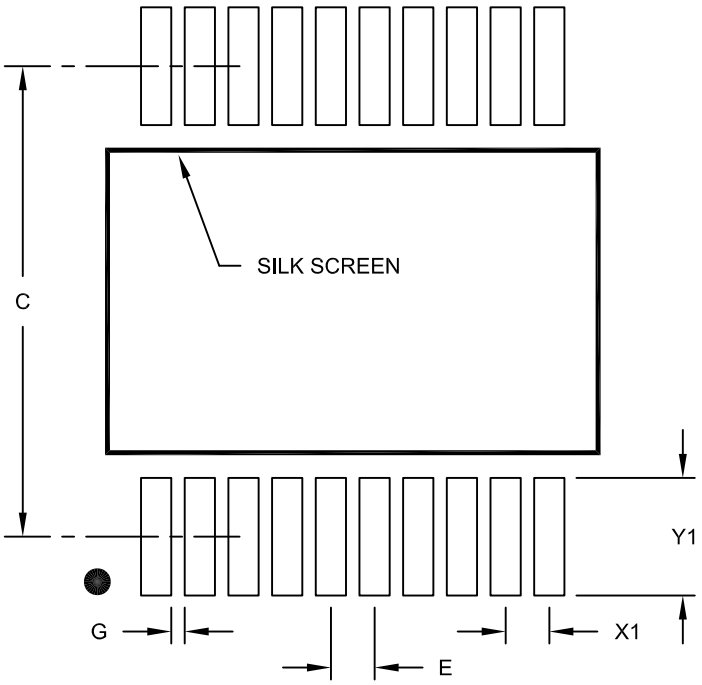

RECOMMENDED LAND PATTERN

Units		MILLIMETERS		
Dimension Limits		MIN	NOM	MAX
Contact Pitch	E	0.65 BSC		
Contact Pad Spacing	C		7.20	
Contact Pad Width (X20)	X1			0.45
Contact Pad Length (X20)	Y1			1.75
Distance Between Pads	G	0.20		

Notes:

1. Dimensioning and tolerancing per ASME Y14.5M

BSC: Basic Dimension. Theoretically exact value shown without tolerances.

Microchip Technology Drawing No. C04-2072A

20-Lead Plastic Quad Flat, No Lead Package (ML) – 4x4x0.9 mm Body [QFN]

Note: For the most current package drawings, please see the Microchip Packaging Specification located at http://www.microchip.com/packaging

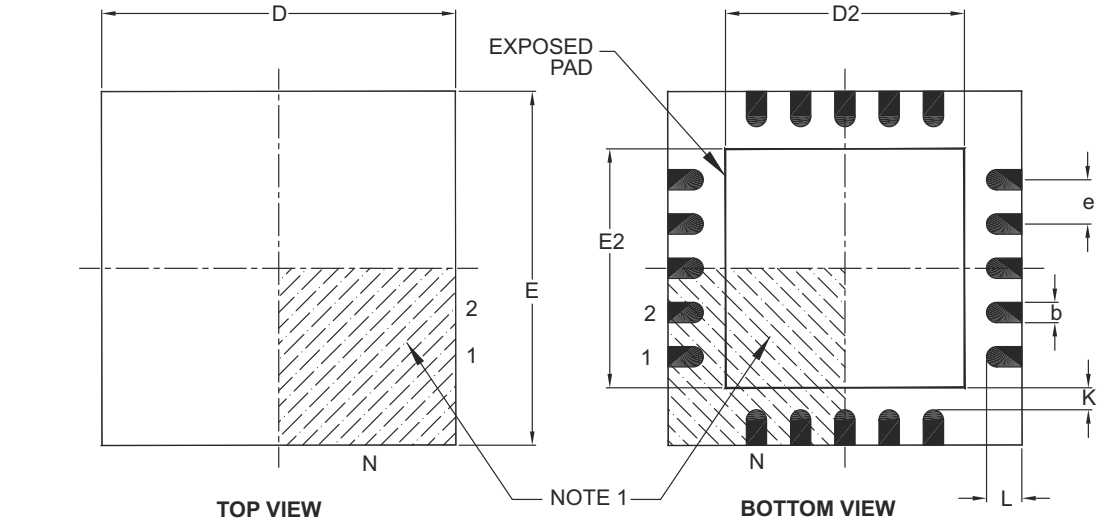

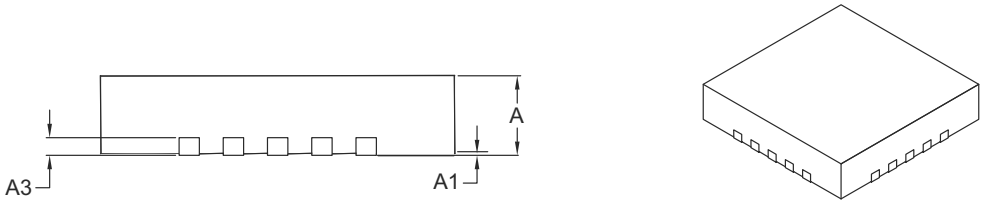

Units		MILLIMETERS		
Dimension Limits		MIN	NOM	MAX
Number of Pins	N		20	
Pitch	e		0.50 BSC	
Overall Height	A	0.80	0.90	1.00
Standoff	A1	0.00	0.02	0.05
Contact Thickness	A3		0.20 REF	
Overall Width	E		4.00 BSC	
Exposed Pad Width	E2	2.60	2.70	2.80
Overall Length	D		4.00 BSC	
Exposed Pad Length	D2	2.60	2.70	2.80
Contact Width	b	0.18	0.25	0.30
Contact Length	L	0.30	0.40	0.50
Contact-to-Exposed Pad	K	0.20	–	–

Notes:

1. Pin 1 visual index feature may vary, but must be located within the hatched area.
2. Package is saw singulated.
3. Dimensioning and tolerancing per ASME Y14.5M.

BSC: Basic Dimension. Theoretically exact value shown without tolerances.
REF: Reference Dimension, usually without tolerance, for information purposes only.

Microchip Technology Drawing C04-126B

 © 2011 Microchip Technology Inc.

20-Lead Plastic Quad Flat, No Lead Package (ML) - 4x4 mm Body [QFN]
With 0.40 mm Contact Length

Note: For the most current package drawings, please see the Microchip Packaging Specification located at http://www.microchip.com/packaging

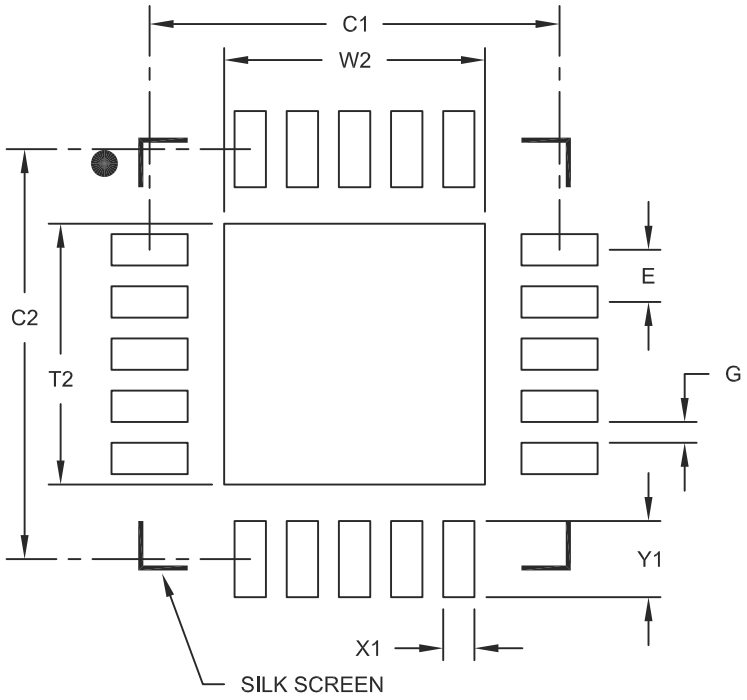

RECOMMENDED LAND PATTERN

Units		MILLIMETERS		
Dimension Limits		MIN	NOM	MAX
Contact Pitch	E		0.50 BSC	
Optional Center Pad Width	W2			2.50
Optional Center Pad Length	T2			2.50
Contact Pad Spacing	C1		3.93	
Contact Pad Spacing	C2		3.93	
Contact Pad Width	X1			0.30
Contact Pad Length	Y1			0.73
Distance Between Pads	G	0.20		

Notes:

1. Dimensioning and tolerancing per ASME Y14.5M

BSC: Basic Dimension. Theoretically exact value shown without tolerances.

Microchip Technology Drawing No. C04-2126A

APPENDIX A: DATA SHEET REVISION HISTORY

Revision A

Original release (06/2011).

 © 2011 Microchip Technology Inc.

NOTES:

INDEX

A

A/D
- Specifications ... 236, 237

Absolute Maximum Ratings ... 221
AC Characteristics
- Industrial and Extended ... 232
- Load Conditions ... 231

ADC ... 121
- Acquisition Requirements ... 132
- Associated registers ... 134
- Block Diagram ... 121
- Calculating Acquisition Time ... 132
- Channel Selection ... 122
- Configuration ... 122
- Configuring Interrupt ... 126
- Conversion Clock ... 122
- Conversion Procedure ... 126
- Internal Sampling Switch (RSS) Impedance ... 132
- Interrupts ... 124
- Operation ... 125
- Operation During Sleep ... 125
- Port Configuration ... 122
- Reference Voltage (VREF) ... 122
- Source Impedance ... 132
- Starting an A/D Conversion ... 124

ADCON0 Register ... 25, 127
ADCON1 Register ... 25, 128
ADCON2 Register ... 129
ADDFSR ... 211
ADDWFC ... 211
ADRESH Register ... 25
ADRESH Register (ADFM = 0) ... 130
ADRESH Register (ADFM = 1) ... 131
ADRESL Register (ADFM = 0) ... 130
ADRESL Register (ADFM = 1) ... 131
Alternate Pin Function ... 100
Analog-to-Digital Converter. *See* ADC
ANSELA Register ... 103
ANSELB Register ... 107
ANSELC Register ... 110
APFCON Register ... 100
Assembler
- MPASM Assembler ... 242

Automatic Context Saving ... 65

B

Bank 10 ... 27
Bank 11 ... 27
Bank 12 ... 28
Bank 13 ... 28
Bank 2 ... 26
Bank 3 ... 26
Bank 30 ... 29
Bank 4 ... 26
Bank 5 ... 26
Bank 6 ... 26
Bank 7 ... 27
Bank 8 ... 27
Bank 9 ... 27
Block Diagrams
- ADC ... 121
- ADC Transfer Function ... 133
- Analog Input Model ... 133
- Clock Source ... 45
- Generic I/O Port ... 99
- Interrupt Logic ... 61
- NCO ... 178
- On-Chip Reset Circuit ... 53
- PIC16(L)F1507 ... 4, 10
- PWM ... 155
- Timer0 ... 135
- Timer1 ... 139
- Timer1 Gate ... 144, 145, 146
- Timer2 ... 151
- Voltage Reference ... 117

BORCON Register ... 55
BRA ... 212
Brown-out Reset (BOR) ... 55
- Specifications ... 235
- Timing and Characteristics ... 234

C

C Compilers
- MPLAB C18 ... 242

CALL ... 213
CALLW ... 213
CLCDATA Register ... 175
CLCxCON Register ... 167
CLCxGLS0 Register ... 171
CLCxGLS1 Register ... 172
CLCxGLS2 Register ... 173
CLCxGLS3 Register ... 174
CLCxPOL Register ... 168
CLCxSEL0 Register ... 169
Clock Sources
- External Modes ... 46
  - EC ... 46
- Internal Modes ... 47
  - HFINTOSC ... 47
  - Internal Oscillator Clock Switch Timing ... 48
  - LFINTOSC ... 47

Clock Switching ... 50
Code Examples
- A/D Conversion ... 126
- Initializing PORTA ... 101
- Writing to Flash Program Memory ... 92

Comparators
- C2OUT as T1 Gate ... 141

Complementary Waveform Generator (CWG) ... 187
CONFIG1 Register ... 40
CONFIG2 Register ... 41
Core Function Register ... 24
Customer Change Notification Service ... 262
Customer Notification Service ... 262
Customer Support ... 262
CWG
- Auto-shutdown Control ... 194
- Clock Source ... 190
- Output Control ... 190
- Selectable Input Sources ... 190

CWGxCON0 Register ... 197
CWGxCON1 Register ... 198
CWGxCON2 Register ... 199
CWGxDBF Register ... 200
CWGxDBR Register ... 200

 © 2011 Microchip Technology Inc.

D

Data Memory 17
DC and AC Characteristics 239
DC Characteristics
  Extended and Industrial 228
  Industrial and Extended 223
Development Support 241
Device Configuration 39
  Code Protection 42
  Configuration Word 39
  User ID 42, 43
Device ID Register 43
Device Overview 9, 79

E

Effects of Reset
  PWM mode 157
Electrical Specifications 221
Enhanced Mid-Range CPU 13
Extended Instruction Set
  ADDFSR 211

F

Firmware Instructions 207
Fixed Voltage Reference (FVR) 117
  Associated Registers 118
Flash Program Memory 83
  Associated Registers 98
  Configuration Word w/ Flash Program Memory 98
  Erasing 87
  Modifying 93
  Write Verify 95
  Writing 89
FSR Register 24
FVRCON (Fixed Voltage Reference Control) Register 118

I

INDF Register 24
Indirect Addressing 34
Instruction Format 208
Instruction Set 207
  ADDLW 211
  ADDWF 211
  ADDWFC 211
  ANDLW 211
  ANDWF 211
  BRA 212
  CALL 213
  CALLW 213
  LSLF 215
  LSRF 215
  MOVF 215
  MOVIW 216
  MOVLB 216
  MOVWI 217
  OPTION 217
  RESET 217
  SUBWFB 219
  TRIS 220
  BCF 212
  BSF 212
  BTFSC 212
  BTFSS 212
  CALL 213
  CLRF 213
  CLRW 213
  CLRWDT 213
  COMF 213
  DECF 213
  DECFSZ 214
  GOTO 214
  INCF 214
  INCFSZ 214
  IORLW 214
  IORWF 214
  MOVLW 216
  MOVWF 216
  NOP 217
  RETFIE 218
  RETLW 218
  RETURN 218
  RLF 218
  RRF 219
  SLEEP 219
  SUBLW 219
  SUBWF 219
  SWAPF 220
  XORLW 220
  XORWF 220
INTCON Register 66
Internal Oscillator Block
  INTOSC
    Specifications 232
Internal Sampling Switch (RSS) Impedance 132
Internet Address 262
Interrupt-On-Change 111
  Associated Registers 115
Interrupts 61
  ADC 126
  Associated registers w/ Interrupts 73
  Configuration Word w/ Clock Sources 52
  TMR1 143
INTOSC Specifications 232
IOCAF Register 113
IOCAN Register 113
IOCAP Register 113
IOCBF Register 114
IOCBN Register 114
IOCBP Register 114

L

LATA Register 103, 109
LATB Register 106
Load Conditions 231
LSLF 215
LSRF 215

M

$\overline{\text{MCLR}}$ 56
  Internal 56
Memory Organization 15
  Data 17
  Program 15
Microchip Internet Web Site 262
MOVIW 216
MOVLB 216
MOVWI 217
MPLAB ASM30 Assembler, Linker, Librarian 242
MPLAB Integrated Development Environment Software 241
MPLAB PM3 Device Programmer 244
MPLAB REAL ICE In-Circuit Emulator System 243

MPLINK Object Linker/MPLIB Object Librarian 242

N

NCO
Associated registers 186
NCOxACCH Register 184
NCOxACCL Register 184
NCOxACCU Register 184
NCOxCLK Register 183
NCOxCON Register 183
NCOxINCH Register 185
NCOxINCL Register 185
Numerically Controlled Oscillator (NCO) 177

O

OPCODE Field Descriptions 207
OPTION 217
OPTION Register 137
OSCCON Register 51
Oscillator
Associated Registers 52
Associated registers 201
Oscillator Module 45
ECH 45
ECL 45
ECM 45
INTOSC 45
Oscillator Parameters 232
Oscillator Specifications 232
Oscillator Start-up Timer (OST)
Specifications 235
OSCSTAT Register 52

P

Packaging 245
Marking 245, 246
PDIP Details 247
PCL and PCLATH 14
PCL Register 24
PCLATH Register 24
PCON Register 25, 59
PIE1 Register 25, 67
PIE2 Register 25, 68
PIE3 Register 25, 69
Pinout Descriptions
PIC16(L)F1507 11
PIR1 Register 25, 70
PIR2 Register 25, 71
PIR3 Register 25, 72
PMADR Registers 83
PMADRH Registers 83
PMADRL Register 96
PMADRL Registers 83
PMCON1 Register 83, 97
PMCON2 Register 83, 98
PMDATH Register 96
PMDATL Register 96
PMDRH Register 96
PORTA 101
ANSELA Register 101
Associated Registers 104
Configuration Word w/ PORTA 104
LATA Register 26
PORTA Register 25
Specifications 233
PORTA Register 102
PORTB
ANSELB Register 105
Associated Registers 107
LATB Register 26
Pin Descriptions and Diagrams 105
PORTB Register 25
PORTB Register 106
PORTC
ANSELC Register 108
Associated Registers 110
LATC Register 26
Pin Descriptions and Diagrams 108
PORTC Register 25
PORTC Register 109
Power-Down Mode (Sleep) 75
Associated Registers 78
Power-on Reset 54
Power-up Time-out Sequence 56
Power-up Timer (PWRT) 54
Specifications 235
PR2 Register 25
Program Memory 15
Map and Stack (PIC16(L)F1507 16
Programming, Device Instructions 207
Pulse Width Modulation (PWM) 155
Associated registers w/ PWM 160
PWM Mode
Duty Cycle 156
Effects of Reset 157
Example PWM Frequencies and
Resolutions, 20 MHZ 157
Example PWM Frequencies and
Resolutions, 8 MHz 157
Operation in Sleep Mode 157
Setup for Operation using PWMx pins 158
System Clock Frequency Changes 157
PWM Period 156
Setup for PWM Operation using PWMx Pins 158
PWMxCON Register 159
PWMxDCH Register 160
PWMxDCL Register 160

R

Reader Response 263
Read-Modify-Write Operations 207
Registers
ADCON0 (ADC Control 0) 127
ADCON1 (ADC Control 1) 128
ADCON2 (ADC Control 2) 129
ADRESH (ADC Result High) with ADFM = 0) 130
ADRESH (ADC Result High) with ADFM = 1) 131
ADRESL (ADC Result Low) with ADFM = 0) 130
ADRESL (ADC Result Low) with ADFM = 1) 131
ANSELA (PORTA Analog Select) 103
ANSELB (PORTB Analog Select) 107
ANSELC (PORTC Analog Select) 110
APFCON (Alternate Pin Function Control) 100
BORCON Brown-out Reset Control) 55
CLCDATA (Data Output) 175
CLCxCON (CLCx Control) 167
CLCxGLS0 (Gate 1 Logic Select) 171
CLCxGLS1 (Gate 2 Logic Select) 172
CLCxGLS2 (Gate 3 Logic Select) 173
CLCxGLS3 (Gate 4 Logic Select) 174
CLCxPOL (Signal Polarity Control) 168
CLCxSEL0 (Multiplexer Data 1 and 2 Select) 169

 © 2011 Microchip Technology Inc.

Configuration Word 1 40
Configuration Word 2 41
Core Function, Summary 24
CWGxCON0 (CWG Control 0) 197
CWGxCON1 (CWG Control 1) 198
CWGxCON2 (CWG Control 1) 199
CWGxDBF (CWGx Dead Band Falling Count) 200
CWGxDBR (CWGx Dead Band Rising Count) 200
Device ID 43
FVRCON 118
INTCON (Interrupt Control) 66
IOCAF (Interrupt-on-Change PORTA Flag) 113
IOCAN (Interrupt-on-Change PORTA Negative Edge) 113
IOCAP (Interrupt-on-Change PORTA Positive Edge) 113
IOCBF (Interrupt-on-Change PORTB Flag) 114
IOCBN (Interrupt-on-Change PORTB Negative Edge) 114
IOCBP (Interrupt-on-Change PORTB Positive Edge) 114
LATA (Data Latch PORTA) 103
LATB (Data Latch PORTB) 106
LATC (Data Latch PORTC) 109
NCOxACCH (NCOx Accumulator High Byte) 184
NCOxACCL (NCOx Accumulator Low Byte) 184
NCOxACCU (NCOx Accumulator Upper Byte) 184
NCOxCLK (NCOx Clock Control) 183
NCOxCON (NCOx Control) 183
NCOxINCH (NCOx Increment High Byte) 185
NCOxINCL (NCOx Increment Low Byte) 185
OPTION_REG (OPTION) 137
OSCCON (Oscillator Control) 51
OSCSTAT (Oscillator Status) 52
PCON (Power Control Register) 59
PCON (Power Control) 59
PIE1 (Peripheral Interrupt Enable 1) 67
PIE2 (Peripheral Interrupt Enable 2) 68
PIE3 (Peripheral Interrupt Enable 3) 69
PIR1 (Peripheral Interrupt Register 1) 70
PIR2 (Peripheral Interrupt Request 2) 71
PIR3 (Peripheral Interrupt Request 3) 72
PMADRL (Program Memory Address) 96
PMCON1 (Program Memory Control 1) 97
PMCON2 (Program Memory Control 2) 98
PMDATH (Program Memory Data) 96
PMDATL (Program Memory Data) 96
PMDRH (Program Memory Address) 96
PORTA 102
PORTB 106
PORTC 109
PWMxCON (PWM Control) 159
PWMxDCH (PWM Control) 160
PWMxDCL (PWM Control) 160
Special Function, Summary 25
STATUS 18
T1CON (Timer1 Control) 147
T1GCON (Timer1 Gate Control) 148
T2CON 153
TRISA (Tri-State PORTA) 102
TRISB (Tri-State PORTB) 106
TRISC (Tri-State PORTC) 109
VREGCON (Voltage Regulator Control) 78
WDTCON (Watchdog Timer Control) 81
WPUA (Weak Pull-up PORTA) 104
WPUB (Weak Pull-up PORTB) 107
WPUC (Weak Pull-up PORTC) 110
RESET 217
Reset 53
Reset Instruction 56
Resets 53
Associated Registers 60
Configuration Word w/ Resets 60
Revision History 255

S

Software Simulator (MPLAB SIM) 243
Special Function Registers (SFRs) 25
Stack 32
Accessing 32
Reset 34
Stack Overflow/Underflow 56
STATUS Register 18
SUBWFB 219

T

T1CON Register 25, 147
T1GCON Register 148
T2CON (Timer2) Register 153
T2CON Register 25
Temperature Indicator
Associated Registers 120
Temperature Indicator Module 119
Thermal Considerations 230
Timer0 135
Associated Registers 137
Operation 135
Specifications 236
Timer1 139
Associated registers 149
Asynchronous Counter Mode 141
Reading and Writing 141
Clock Source Selection 140
Interrupt 143
Operation 140
Operation During Sleep 143
Prescaler 141
Specifications 236
Timer1 Gate
Selecting Source 141
TMR1H Register 139
TMR1L Register 139
Timer2 151
Associated registers 154
Timers
Timer1
T1CON 147
T1GCON 148
Timer2
T2CON 153
Timing Diagrams
A/D Conversion 237
A/D Conversion (Sleep Mode) 238
Brown-out Reset (BOR) 234
Brown-out Reset Situations 55
CLKOUT and I/O 233
Clock Timing 232
INT Pin Interrupt 64
Internal Oscillator Switch Timing 49
Reset Start-up Sequence 57
Reset, WDT, OST and Power-up Timer 234

Timer0 and Timer1 External Clock 235
Timer1 Incrementing Edge..... 143
Wake-up from Interrupt 76
Timing Parameter Symbology..... 231
TMR0 Register 25
TMR1H Register 25
TMR1L Register 25
TMR2 Register 25
TRIS 220
TRISA Register 25, 102
TRISB..... 105
TRISB Register 25, 106
TRISC 108
TRISC Register 25, 109

V

VREF. *SEE* ADC Reference Voltage
VREGCON Register..... 78

W

Wake-up Using Interrupts 75
Watchdog Timer (WDT) 56
Associated Registers 82
Configuration Word w/ Watchdog Timer 82
Modes 80
Specifications..... 235
WDTCON Register..... 81
WPUA Register 104
WPUB Register 107
WPUC Register..... 110
Write Protection..... 42
WWW Address..... 262

 © 2011 Microchip Technology Inc.

NOTES:

THE MICROCHIP WEB SITE

Microchip provides online support via our WWW site at www.microchip.com. This web site is used as a means to make files and information easily available to customers. Accessible by using your favorite Internet browser, the web site contains the following information:

- **Product Support** – Data sheets and errata, application notes and sample programs, design resources, user's guides and hardware support documents, latest software releases and archived software
- **General Technical Support** – Frequently Asked Questions (FAQ), technical support requests, online discussion groups, Microchip consultant program member listing
- **Business of Microchip** – Product selector and ordering guides, latest Microchip press releases, listing of seminars and events, listings of Microchip sales offices, distributors and factory representatives

CUSTOMER CHANGE NOTIFICATION SERVICE

Microchip's customer notification service helps keep customers current on Microchip products. Subscribers will receive e-mail notification whenever there are changes, updates, revisions or errata related to a specified product family or development tool of interest.

To register, access the Microchip web site at www.microchip.com. Under "Support", click on "Customer Change Notification" and follow the registration instructions.

CUSTOMER SUPPORT

Users of Microchip products can receive assistance through several channels:

- Distributor or Representative
- Local Sales Office
- Field Application Engineer (FAE)
- Technical Support
- Development Systems Information Line

Customers should contact their distributor, representative or field application engineer (FAE) for support. Local sales offices are also available to help customers. A listing of sales offices and locations is included in the back of this document.

Technical support is available through the web site at: http://microchip.com/support

© 2011 Microchip Technology Inc.

READER RESPONSE

It is our intention to provide you with the best documentation possible to ensure successful use of your Microchip product. If you wish to provide your comments on organization, clarity, subject matter, and ways in which our documentation can better serve you, please FAX your comments to the Technical Publications Manager at (480) 792-4150.

Please list the following information, and use this outline to provide us with your comments about this document.

TO: Technical Publications Manager Total Pages Sent _____

RE: Reader Response

From: Name _____

Company _____

Address _____

City / State / ZIP / Country _____

Telephone: (_____) _____ - _____ FAX: (_____) _____ - _____

Application (optional):

Would you like a reply? ___Y ___N

Device: PIC16(L)F1507 Literature Number: DS41586A

Questions:

1. What are the best features of this document?

2. How does this document meet your hardware and software development needs?

3. Do you find the organization of this document easy to follow? If not, why?

4. What additions to the document do you think would enhance the structure and subject?

5. What deletions from the document could be made without affecting the overall usefulness?

6. Is there any incorrect or misleading information (what and where)?

7. How would you improve this document?

PRODUCT IDENTIFICATION SYSTEM

To order or obtain information, e.g., on pricing or delivery, refer to the factory or the listed sales office.

PART NO.	[X](1)	-	X	/XX	XXX
Device	Tape and Reel Option		Temperature Range	Package	Pattern

Device:	PIC16F1507, PIC16LF1507
Tape and Reel Option:	Blank = Standard packaging (tube or tray) T = Tape and Reel(1)
Temperature Range:	I = -40°C to +85°C (Industrial) E = -40°C to +125°C (Extended)
Package:	ML = Micro Lead Frame (QFN) 4x4 P = Plastic DIP SO = SOIC SS = SSOP
Pattern:	QTP, SQTP, Code or Special Requirements (blank otherwise)

Examples:

a) PIC16LF1507T - I/SO
Tape and Reel,
Industrial temperature,
SOIC package

b) PIC16F1507 - I/P
Industrial temperature
PDIP package

c) PIC16F1507 - E/ML 298
Extended temperature,
QFN package
QTP pattern #298

Note 1: Tape and Reel identifier only appears in the catalog part number description. This identifier is used for ordering purposes and is not printed on the device package. Check with your Microchip Sales Office for package availability with the Tape and Reel option.

 © 2011 Microchip Technology Inc.

Worldwide Sales and Service

AMERICAS

Corporate Office
2355 West Chandler Blvd.
Chandler, AZ 85224-6199
Tel: 480-792-7200
Fax: 480-792-7277
Technical Support:
http://www.microchip.com/support
Web Address:
www.microchip.com

Atlanta
Duluth, GA
Tel: 678-957-9614
Fax: 678-957-1455

Boston
Westborough, MA
Tel: 774-760-0087
Fax: 774-760-0088

Chicago
Itasca, IL
Tel: 630-285-0071
Fax: 630-285-0075

Cleveland
Independence, OH
Tel: 216-447-0464
Fax: 216-447-0643

Dallas
Addison, TX
Tel: 972-818-7423
Fax: 972-818-2924

Detroit
Farmington Hills, MI
Tel: 248-538-2250
Fax: 248-538-2260

Indianapolis
Noblesville, IN
Tel: 317-773-8323
Fax: 317-773-5453

Los Angeles
Mission Viejo, CA
Tel: 949-462-9523
Fax: 949-462-9608

Santa Clara
Santa Clara, CA
Tel: 408-961-6444
Fax: 408-961-6445

Toronto
Mississauga, Ontario,
Canada
Tel: 905-673-0699
Fax: 905-673-6509

ASIA/PACIFIC

Asia Pacific Office
Suites 3707-14, 37th Floor
Tower 6, The Gateway
Harbour City, Kowloon
Hong Kong
Tel: 852-2401-1200
Fax: 852-2401-3431

Australia - Sydney
Tel: 61-2-9868-6733
Fax: 61-2-9868-6755

China - Beijing
Tel: 86-10-8569-7000
Fax: 86-10-8528-2104

China - Chengdu
Tel: 86-28-8665-5511
Fax: 86-28-8665-7889

China - Chongqing
Tel: 86-23-8980-9588
Fax: 86-23-8980-9500

China - Hangzhou
Tel: 86-571-2819-3180
Fax: 86-571-2819-3189

China - Hong Kong SAR
Tel: 852-2401-1200
Fax: 852-2401-3431

China - Nanjing
Tel: 86-25-8473-2460
Fax: 86-25-8473-2470

China - Qingdao
Tel: 86-532-8502-7355
Fax: 86-532-8502-7205

China - Shanghai
Tel: 86-21-5407-5533
Fax: 86-21-5407-5066

China - Shenyang
Tel: 86-24-2334-2829
Fax: 86-24-2334-2393

China - Shenzhen
Tel: 86-755-8203-2660
Fax: 86-755-8203-1760

China - Wuhan
Tel: 86-27-5980-5300
Fax: 86-27-5980-5118

China - Xian
Tel: 86-29-8833-7252
Fax: 86-29-8833-7256

China - Xiamen
Tel: 86-592-2388138
Fax: 86-592-2388130

China - Zhuhai
Tel: 86-756-3210040
Fax: 86-756-3210049

ASIA/PACIFIC

India - Bangalore
Tel: 91-80-3090-4444
Fax: 91-80-3090-4123

India - New Delhi
Tel: 91-11-4160-8631
Fax: 91-11-4160-8632

India - Pune
Tel: 91-20-2566-1512
Fax: 91-20-2566-1513

Japan - Yokohama
Tel: 81-45-471- 6166
Fax: 81-45-471-6122

Korea - Daegu
Tel: 82-53-744-4301
Fax: 82-53-744-4302

Korea - Seoul
Tel: 82-2-554-7200
Fax: 82-2-558-5932 or
82-2-558-5934

Malaysia - Kuala Lumpur
Tel: 60-3-6201-9857
Fax: 60-3-6201-9859

Malaysia - Penang
Tel: 60-4-227-8870
Fax: 60-4-227-4068

Philippines - Manila
Tel: 63-2-634-9065
Fax: 63-2-634-9069

Singapore
Tel: 65-6334-8870
Fax: 65-6334-8850

Taiwan - Hsin Chu
Tel: 886-3-6578-300
Fax: 886-3-6578-370

Taiwan - Kaohsiung
Tel: 886-7-213-7830
Fax: 886-7-330-9305

Taiwan - Taipei
Tel: 886-2-2500-6610
Fax: 886-2-2508-0102

Thailand - Bangkok
Tel: 66-2-694-1351
Fax: 66-2-694-1350

EUROPE

Austria - Wels
Tel: 43-7242-2244-39
Fax: 43-7242-2244-393

Denmark - Copenhagen
Tel: 45-4450-2828
Fax: 45-4485-2829

France - Paris
Tel: 33-1-69-53-63-20
Fax: 33-1-69-30-90-79

Germany - Munich
Tel: 49-89-627-144-0
Fax: 49-89-627-144-44

Italy - Milan
Tel: 39-0331-742611
Fax: 39-0331-466781

Netherlands - Drunen
Tel: 31-416-690399
Fax: 31-416-690340

Spain - Madrid
Tel: 34-91-708-08-90
Fax: 34-91-708-08-91

UK - Wokingham
Tel: 44-118-921-5869
Fax: 44-118-921-5820

05/02/11

© 2011 Microchip Technology Inc.