PIC16(L)F1824/8

14/20-Pin Flash Microcontrollers with XLP Technology

High-Performance RISC CPU

- Only 49 Instructions to Learn:
  - All single-cycle instructions except branches
- Operating Speed:
  - DC – 32 MHz oscillator/clock input
  - DC – 125 ns instruction cycle
- Up to 8 Kbytes Linear Program Memory Addressing
- Up to 256 bytes Linear Data Memory Addressing
- Interrupt Capability with Automatic Context Saving
- 16-Level Deep Hardware Stack with Optional Overflow/Underflow Reset
- Direct, Indirect and Relative Addressing modes:
  - Two full 16-bit File Select Registers (FSRs)
  - FSRs can read program and data memory

Flexible Oscillator Structure

- Precision 32 MHz Internal Oscillator Block:
  - Factory calibrated to ± 1%, typical
  - Software selectable frequencies range of 31 kHz to 32 MHz
- 31 kHz Low-Power Internal Oscillator
- Four Crystal modes up to 32 MHz
- Three External Clock modes up to 32 MHz
- 4X Phase Lock Loop (PLL)
- Fail-Safe Clock Monitor:
  - Allows for safe shutdown if peripheral clock stops
- Two-Speed Oscillator Start-up
- Reference Clock module:
  - Programmable clock output frequency and duty-cycle

Special Microcontroller Features

- 1.8V-5.5V Operation – PIC16F1824/8
- 1.8V-3.6V Operation – PIC16LF1824/8
- Self-Programmable under Software Control
- Power-on Reset (POR), Power-up Timer (PWRT) and Oscillator Start-up Timer (OST)
- Programmable Brown-out Reset (BOR)
- Extended Watchdog Timer (WDT)
- In-Circuit Serial Programming™ (ICSP™) via Two Pins
- In-Circuit Debug (ICD) via Two Pins
- Enhanced Low-Voltage Programming (LVP)
- Operating Voltage Range:
  - 1.8V-5.5V (PIC16F1824/8)
  - 1.8V-3.6V (PIC16LF1824/8)
- Programmable Code Protection
- Power-Saving Sleep mode

Extreme Low-Power Management PIC16LF1824/8 with XLP

- Sleep mode: 20 nA @ 1.8V, typical
- Watchdog Timer: 200 nA @ 1.8V, typical
- Timer1 Oscillator: 650 nA @ 32 kHz, 1.8V, typical
- Operating Current: 48 µA/MHz @ 1.8V, typical

Analog Features

- Analog-to-Digital Converter (ADC) module:
  - 10-bit resolution, up to 12 channels
  - Auto acquisition capability
  - Conversion available during Sleep
- Analog Comparator module:
  - Two rail-to-rail analog comparators
  - Power mode control
  - Software controllable hysteresis
- Voltage Reference module:
  - Fixed Voltage Reference (FVR) with 1.024V, 2.048V and 4.096V output levels
  - 5-bit rail-to-rail resistive DAC with positive and negative reference selection

Peripheral Highlights

- Up to 17 I/O Pins and 1 Input Only Pin:
  - High current sink/source 25 mA/25 mA
  - Programmable weak pull-ups
  - Programmable interrupt-on-change pins
- Timer0: 8-bit Timer/Counter with 8-bit Prescaler
- Enhanced Timer1:
  - 16-bit timer/counter with prescaler
  - External Gate Input mode
  - Dedicated, low-power 32 kHz oscillator driver
- Three Timer2-types: 8-bit Timer/Counter with 8-bit Period Register, Prescaler and Postscaler
- Two Capture, Compare, PWM (CCP) modules
- Two Enhanced CCP (ECCP) modules:
  - Software selectable time bases
  - Auto-shutdown and auto-restart
  - PWM steering
- Master Synchronous Serial Port (MSSP) with SPI and I^2C™ with:
  - 7-bit address masking
  - SMBus/PMBus™ compatibility
- Enhanced Universal Synchronous Asynchronous Receiver Transmitter (EUSART) module
- mTouch™ Sensing Oscillator module:
  - Up to 12 input channels
- Data Signal Modulator module:
  - Selectable modulator and carrier sources
- SR Latch:
  - Multiple Set/Reset input options
  - Emulates 555 Timer applications

© 2010-2015 Microchip Technology Inc.

PIC12(L)F1822/1840/PIC16(L)F182x/1847 Family Types

Device	Data Sheet Index	Program Memory Flash (words)	Data EEPROM (bytes)	Data SRAM (bytes)	I/O's(2)	10-bit ADC (ch)	CapSense (ch)	Comparators	Timers (8/16-bit)	EUSART	MSSP (I^2C™/SPI)	ECCP (Full-Bridge) ECCP (Half-Bridge) CCP	SR Latch	Debug(1)	XLP
PIC12(L)F1822	(1)	2K	256	128	6	4	4	1	2/1	1	1	0/1/0	Y	I/H	Y
PIC12(L)F1840	(2)	4K	256	256	6	4	4	1	2/1	1	1	0/1/0	Y	I/H	Y
PIC16(L)F1823	(1)	2K	256	128	12	8	8	2	2/1	1	1	1/0/0	Y	I/H	Y
PIC16(L)F1824	(3)	4K	256	256	12	8	8	2	4/1	1	1	1/1/2	Y	I/H	Y
PIC16(L)F1825	(4)	8K	256	1024	12	8	8	2	4/1	1	1	1/1/2	Y	I/H	Y
PIC16(L)F1826	(5)	2K	256	256	16	12	12	2	2/1	1	1	1/0/0	Y	I/H	Y
PIC16(L)F1827	(5)	4K	256	384	16	12	12	2	4/1	1	2	1/1/2	Y	I/H	Y
PIC16(L)F1828	(3)	4K	256	256	18	12	12	2	4/1	1	1	1/1/2	Y	I/H	Y
PIC16(L)F1829	(4)	8K	256	1024	18	12	12	2	4/1	1	2	1/1/2	Y	I/H	Y
PIC16(L)F1847	(6)	8K	256	1024	16	12	12	2	4/1	1	2	1/1/2	Y	I/H	Y

Note 1: I - Debugging, Integrated on Chip; H - Debugging, available using Debug Header.

2: One pin is input-only.

Data Sheet Index: (Unshaded devices are described in this document.)

1: DS41413 PIC12(L)F1822/PIC16(L)F1823 Data Sheet, 8/14-Pin Flash Microcontrollers.

2: DS41441 PIC12(L)F1840 Data Sheet, 8-Pin Flash Microcontrollers.

3: DS41419 PIC16(L)F1824/1828 Data Sheet, 28/40/44-Pin Flash Microcontrollers.

4: DS41440 PIC16(L)F1825/1829 Data Sheet, 14/20-Pin Flash Microcontrollers.

5: DS41391 PIC16(L)F1826/1827 Data Sheet, 18/20/28-Pin Flash Microcontrollers.

6: DS41453 PIC16(L)F1847 Data Sheet, 18/20/28-Pin Flash Microcontrollers.

Note: For other small form-factor package availability and marking information, please visit www.microchip.com/packaging or contact your local sales office.

© 2010-2015 Microchip Technology Inc.

FIGURE 1: 14-PIN DIAGRAM FOR PIC16(L)F1824

PDIP, SOIC, TSSOP

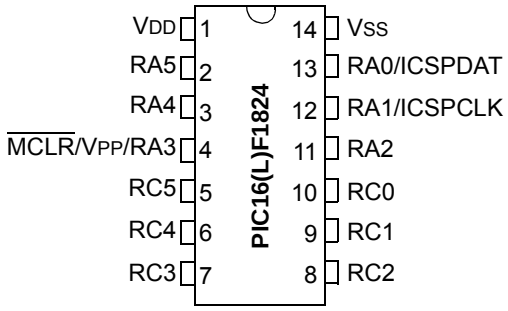

FIGURE 2: 16-PIN DIAGRAM FOR PIC16(L)F1824

QFN, UQFN

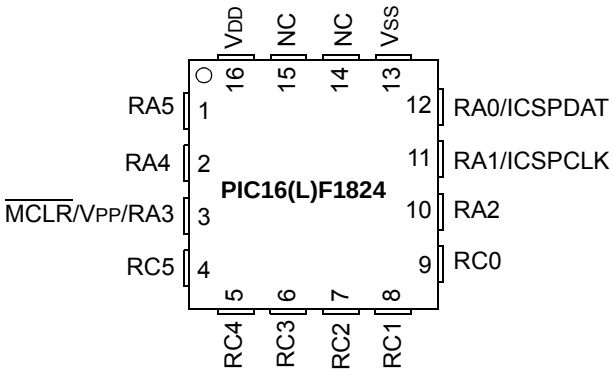

TABLE 1: 14-PIN AND 16-PIN ALLOCATION TABLE (PIC16(L)F1824)

I/O	14-Pin PDIP/SOIC/TSSOP	16-Pin QFN/UQFN	A/D	Reference	Cap Sense	Comparator	SR Latch	Timers	ECCP	EUSART	MSSP	Interrupt	Modulator	Pull-up	Basic
RA0	13	12	AN0	VREF- DACOUT	CPS0	C1IN+	—	—	—	TX(1) CK(1)	—	IOC	—	Y	ICSPDAT ICDDAT
RA1	12	11	AN1	VREF+	CPS1	C12IN0-	SRI	—	—	RX(1) DT(1)	—	IOC	—	Y	ICSPCLK ICDCLK
RA2	11	10	AN2	—	CPS2	C1OUT	SRQ	T0CKI	CCP3 FLT0	—	—	INT/ IOC	—	Y	—
RA3	4	3	—	—	—	—	—	T1G(1)	—	—	$\overline{SS}$(1)	IOC	—	Y	$\overline{MCLR}$ VPP
RA4	3	2	AN3	—	CPS3	—	—	T1G(1) T1OSO	P2B(1)	—	SDO(1)	IOC	—	Y	OSC2 CLKOUT CLKR
RA5	2	1	—	—	—	—	—	T1CKI T1OSI	CCP2 P2A(1)	—	—	IOC	—	Y	OSC1 CLKIN
RC0	10	9	AN4	—	CPS4	C2IN+	—	—	P1D(1)	—	SCL SCK	—	—	Y	—
RC1	9	8	AN5	—	CPS5	C12IN1-	—	—	CCP4 P1C(1)	—	SDA SDI	—	—	Y	—
RC2	8	7	AN6	—	CPS6	C12IN2-	—	—	P1D(1) P2B(1)	—	SDO(1)	—	MDCIN1	Y	—
RC3	7	6	AN7	—	CPS7	C12IN3-	—	—	CCP2(1) P1C(1) P2A(1)	—	$\overline{SS}$(1)	—	MDMIN	Y	—
RC4	6	5	—	—	—	C2OUT	SRNQ	—	P1B	TX(1) CK(1)	—	—	MDOUT	Y	—
RC5	5	4	—	—	—	—	—	—	CCP1 P1A	RX(1) DT(1)	—	—	MDCIN2	Y	—
VDD	1	16	—	—	—	—	—	—	—	—	—	—	—	—	VDD
VSS	14	13	—	—	—	—	—	—	—	—	—	—	—	—	VSS

Note 1: Pin function is selectable via the APFCON0 or APFCON1 registers.

© 2010-2015 Microchip Technology Inc.

FIGURE 3: 20-PIN DIAGRAM FOR PIC16(L)F1828

PDIP, SOIC, SSOP

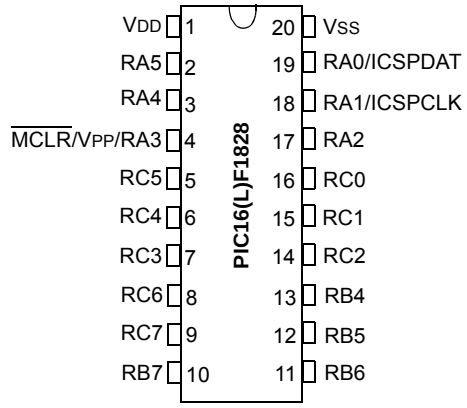

FIGURE 4: 20-PIN DIAGRAM FOR PIC16(L)F1828

QFN, UQFN

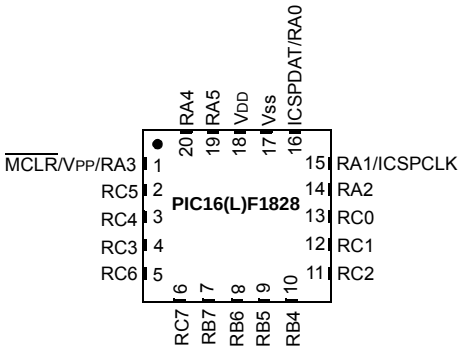

TABLE 2: 20-PIN ALLOCATION TABLE (PIC16(L)F1828)

I/O	20-Pin DIP/SOIC/SSOP	20-Pin QFN/UQFN	A/D	Reference	Cap Sense	Comparator	SR Latch	Timers	CCP	EUSART	SSP	Interrupt	Modulator	Pull-up	Basic
RA0	19	16	AN0	VREF- DACOUT	CPS0	C1IN+	—	—	—	—	—	IOC	—	Y	ICSPDAT/ ICDDAT
RA1	18	15	AN1	VREF+	CPS1	C12IN0-	SRI	—	—	—	—	IOC	—	Y	ICSPCLK/ ICDCLK
RA2	17	14	AN2	—	CPS2	C1OUT	SRQ	T0CKI	CCP3 FLT0	—	—	INT/ IOC	—	Y	—
RA3	4	1		—	—	—	—	T1G(1)	—	—	—	IOC	—	Y(4)	$\overline{\text{MCLR}}$ VPP
RA4	3	20	AN3	—	CPS3	—	—	T1G(1) T1OSO	P2B(1)	—	—	IOC	—	Y	OSC2 CLKOUT CLKR
RA5	2	19	—	—	—	—	—	T1CKI T1OSI	CCP2(1) P2A(1)	—	—	IOC	—	Y	OSC1 CLKIN
RB4	13	10	AN10	—	CPS10	—		—	—	—	SDA1 SDI1	IOC	—	Y	—
RB5	12	9	AN11	—	CPS11	—	—	—	—	RX(1) DT(1)	—	IOC	—	Y	—
RB6	11	8	—	—	—	—	—	—	—	—	SCL1 SCK1	IOC	—	Y	—
RB7	10	7	—	—	—	—	—	—	—	TX(1) CK(1)	—	IOC	—	Y	—
RC0	16	13	AN4	—	CPS4	C2IN+	—	—	P1D(1)	—	—	—	—	Y	—
RC1	15	12	AN5	—	CPS5	C12IN1-	—	—	P1C(1)	—	—	—	—	Y	—
RC2	14	11	AN6	—	CPS6	C12IN2-	—	—	P1D(1) P2B(1)	—	—	—	MDCIN1	Y	—
RC3	7	4	AN7	—	CPS7	C12IN3-	—	—	P1C(1) CCP2(1) P2A(1)	—	—	—	MDMIN	Y	—
RC4	6	3	—	—	—	C2OUT	SRNQ	—	P1B	TX(1) CK(1)	—	—	MDOUT	Y	—
RC5	5	2	—	—	—	—	—	—	CCP1 P1A	RX(1) DT(1)	—	—	MDCIN2	Y	—
RC6	8	5	AN8	—	CPS8	—	—	—	CCP4	—	$\overline{\text{SS}}$	—	—	Y	—
RC7	9	6	AN9	—	CPS9	—	—	—	—	—	SDO	—	—	Y	—
VDD	1	18	—	—	—	—	—	—	—	—	—	—	—	—	VDD
Vss	20	17	—	—	—	—	—	—	—	—	—	—	—	—	Vss

Note 1: Pin function is selectable via the APFCON0 or APFCON1 registers.

© 2010-2015 Microchip Technology Inc.

Table of Contents

1.0 Device Overview 9
2.0 Enhanced Mid-Range CPU 17
3.0 Memory Organization 19
4.0 Device Configuration 47
5.0 Oscillator Module (With Fail-Safe Clock Monitor) 53
6.0 Reference Clock Module 71
7.0 Resets 74
8.0 Interrupts 83
9.0 Power-Down Mode (Sleep) 97
10.0 Watchdog Timer 99
11.0 Data EEPROM and Flash Program Memory Control 102
12.0 I/O Ports 116
13.0 Interrupt-On-Change 135
14.0 Fixed Voltage Reference (FVR) 140
15.0 Temperature Indicator Module 142
16.0 Analog-to-Digital Converter (ADC) Module 143
17.0 Digital-to-Analog Converter (DAC) Module 156
18.0 SR Latch 161
19.0 Comparator Module 166
20.0 Timer0 Module 174
21.0 Timer1 Module with Gate Control 178
22.0 Timer2/4/6 Modules 189
23.0 Data Signal Modulator 193
24.0 Capture/Compare/PWM Modules 202
25.0 Master Synchronous Serial Port Module 230
26.0 Enhanced Universal Synchronous Asynchronous Receiver Transmitter (EUSART) 285
27.0 Capacitive Sensing (CPS) Module 313
28.0 In-Circuit Serial Programming™ (ICSP™) 321
29.0 Instruction Set Summary 324
30.0 Electrical Specifications 338
31.0 DC and AC Characteristics Graphs and Charts 375
32.0 Development Support 406
33.0 Packaging Information 410

TO OUR VALUED CUSTOMERS

It is our intention to provide our valued customers with the best documentation possible to ensure successful use of your Microchip products. To this end, we will continue to improve our publications to better suit your needs. Our publications will be refined and enhanced as new volumes and updates are introduced.

If you have any questions or comments regarding this publication, please contact the Marketing Communications Department via E-mail at **docerrors@microchip.com**. We welcome your feedback.

Most Current Data Sheet

To obtain the most up-to-date version of this data sheet, please register at our Worldwide Web site at:

http://www.microchip.com

You can determine the version of a data sheet by examining its literature number found on the bottom outside corner of any page. The last character of the literature number is the version number, (e.g., DS30000000A is version A of document DS30000000).

Errata

An errata sheet, describing minor operational differences from the data sheet and recommended workarounds, may exist for current devices. As device/documentation issues become known to us, we will publish an errata sheet. The errata will specify the revision of silicon and revision of document to which it applies.

To determine if an errata sheet exists for a particular device, please check with one of the following:

- Microchip's Worldwide Web site; **http://www.microchip.com**
- Your local Microchip sales office (see last page)

When contacting a sales office, please specify which device, revision of silicon and data sheet (include literature number) you are using.

Customer Notification System

Register on our web site at **www.microchip.com** to receive the most current information on all of our products.

© 2010-2015 Microchip Technology Inc.

1.0 DEVICE OVERVIEW

The PIC16(L)F1824/8 are described within this data sheet. They are available in 14/20 pin packages. Figure 1-1 shows a block diagram of the PIC16(L)F1824/8 devices. Tables 1-2 and 1-3 show the pinout descriptions.

Reference Table 1-1 for peripherals available per device.

TABLE 1-1: DEVICE PERIPHERAL SUMMARY

Peripheral		PIC16(L)F1824	PIC16(L)F1828
ADC		●	●
Capacitive Sensing Module (CSM)		●	●
Data EEPROM		●	●
Digital-to-Analog Converter (DAC)		●	●
Digital Signal Modulator (DSM)		●	●
EUSART		●	●
Fixed Voltage Reference (FVR)		●	●
SR Latch		●	●
Capture/Compare/PWM Modules			
	ECCP1	●	●
	ECCP2	●	●
	CCP3	●	●
	CCP4	●	●
Comparators			
	C1	●	●
	C2	●	●
Master Synchronous Serial Ports			
	MSSP	●	●
Timers			
	Timer0	●	●
	Timer1	●	●
	Timer2	●	●
	Timer4	●	●
	Timer6	●	●

FIGURE 1-1: PIC16(L)F1824/8 BLOCK DIAGRAM

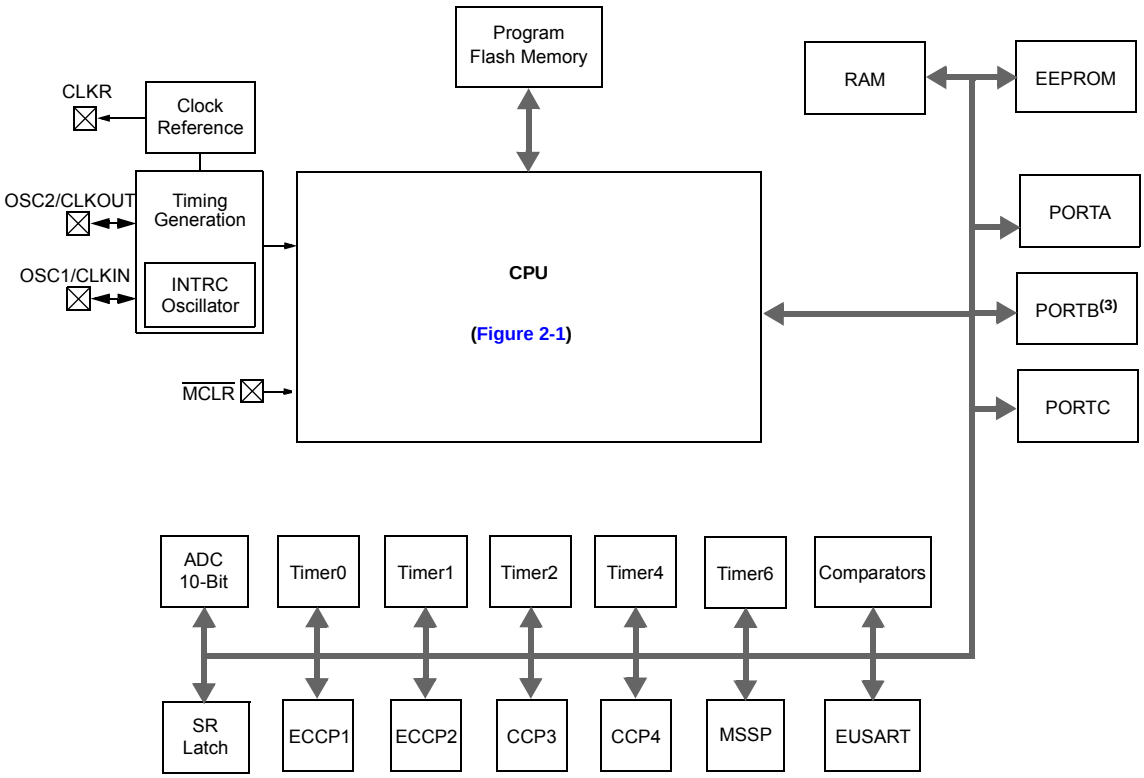

Note 1: See applicable chapters for more information on peripherals.
2: See Table 1-1 for peripherals available on specific devices.
3: PIC16(L)F1828 only.

© 2010-2015 Microchip Technology Inc.

TABLE 1-2: PIC16(L)F1824 PINOUT DESCRIPTION

Name	Function	Input Type	Output Type	Description
RA0/AN0/CPS0/C1IN+/VREF-/DACOUT/TX(1)/CK(1)/ICSPDAT/ICDDAT	RA0	TTL	CMOS	General purpose I/O.
	AN0	AN	—	A/D Channel 0 input.
	CPS0	AN	—	Capacitive sensing input 0.
	C1IN+	AN	—	Comparator C1 positive input.
	VREF-	AN	—	A/D and DAC Negative Voltage Reference input.
	DACOUT	—	AN	Digital-to-Analog Converter output.
	TX	—	CMOS	USART asynchronous transmit.
	CK	ST	CMOS	USART synchronous clock.
	ICSPDAT	ST	CMOS	ICSP™ Data I/O.
	ICDDAT	ST	CMOS	In-Circuit Data I/O.
RA1/AN1/CPS1/C12IN0-/VREF+/SRI/RX(1)/DT(1)/ICSPCLK/ICDCLK	RA1	TTL	CMOS	General purpose I/O.
	AN1	AN	—	A/D Channel 1 input.
	CPS1	AN	—	Capacitive sensing input 1.
	C12IN0-	AN	—	Comparator C1 or C2 negative input.
	VREF+	AN	—	A/D and DAC Positive Voltage Reference input.
	SRI	ST	—	SR latch input.
	RX	ST	—	USART asynchronous input.
	DT	ST	CMOS	USART synchronous data.
	ICSPCLK	ST	—	Serial Programming Clock.
	ICDCLK	ST	—	In-Circuit Debug Clock.
RA2/AN2/CPS2/T0CKI/INT/C1OUT/SRQ/CCP3/FLT0	RA2	ST	CMOS	General purpose I/O.
	AN2	AN	—	A/D Channel 2 input.
	CPS2	AN	—	Capacitive sensing input 2.
	T0CKI	ST	—	Timer0 clock input.
	INT	ST	—	External interrupt.
	C1OUT	—	CMOS	Comparator C1 output.
	SRQ	—	CMOS	SR latch non-inverting output.
	CCP3	ST	CMOS	Capture/Compare/PWM3.
	FLT0	ST	—	ECCP Auto-Shutdown Fault input.
RA3/$\overline{SS}$(1)/T1G(1)/VPP/$\overline{MCLR}$	RA3	TTL	—	General purpose input.
	$\overline{SS}$	ST	—	Slave Select input.
	T1G	ST	—	Timer1 Gate input.
	VPP	HV	—	Programming voltage.
	$\overline{MCLR}$	ST	—	Master Clear with internal pull-up.

Legend: AN = Analog input or output CMOS = CMOS compatible input or output OD = Open Drain
TTL = TTL compatible input ST = Schmitt Trigger input with CMOS levels I^2C™ = Schmitt Trigger input with I^2C levels
HV = High Voltage XTAL = Crystal

Note 1: Pin functions can be moved using the APFCONO and APFCON1 registers (Register 12-1 and Register 12-2).
2: Default function location.

TABLE 1-2: PIC16(L)F1824 PINOUT DESCRIPTION (CONTINUED)

Name	Function	Input Type	Output Type	Description
RA4/AN3/CPS3/OSC2/ CLKOUT/T1OSO/CLKR/ SDO(1)/P2B(1)/T1G(1,2)	RA4	TTL	CMOS	General purpose I/O.
	AN3	AN	—	A/D Channel 3 input.
	CPS3	AN	—	Capacitive sensing input 3.
	OSC2	—	CMOS	Crystal/Resonator (LP, XT, HS modes).
	CLKOUT	—	CMOS	FOSC/4 output.
	T1OSO	XTAL	XTAL	Timer1 oscillator connection.
	CLKR	—	CMOS	Clock Reference output.
	SDO	—	CMOS	SPI data output.
	P2B	—	CMOS	PWM output.
	T1G	ST	—	Timer1 Gate input.
RA5/CLKIN/OSC1/T1OSI/ T1CKI/P2A(1)/CCP2(1)	RA5	TTL	CMOS	General purpose I/O.
	CLKIN	ST	—	External clock input (EC mode).
	OSC1	XTAL	—	Crystal/Resonator (LP, XT, HS modes).
	T1OSI	XTAL	XTAL	Timer1 oscillator connection.
	T1CKI	ST	—	Timer1 clock input.
	P2A	—	CMOS	PWM output.
	CCP2	ST	CMOS	Capture/Compare/PWM2.
RC0/AN4/CPS4/C2IN+/SCL/ SCK/P1D(1)	RC0	TTL	CMOS	General purpose I/O.
	AN4	AN	—	A/D Channel 4 input.
	CPS4	AN	—	Capacitive sensing input 4.
	C2IN+	AN	—	Comparator C2 positive input.
	SCL	I^2C	OD	I^2C™ clock.
	SCK	ST	CMOS	SPI clock.
	P1D	—	CMOS	PWM output.
RC1/AN5/CPS5/C12IN1-/SDA/ SDI/P1C(1)/CCP4	RC1	TTL	CMOS	General purpose I/O.
	AN5	AN	—	A/D Channel 5 input.
	CPS5	AN	—	Capacitive sensing input 5.
	C12IN1-	AN	—	Comparator C1 or C2 negative input.
	SDA	I^2C	OD	I^2C data input/output.
	SDI	CMOS	—	SPI data input.
	P1C	—	CMOS	PWM output.
	CCP4	ST	CMOS	Capture/Compare/PWM4.
RC2/AN6/CPS6/C12IN2-/ P1D(1,2)/P2B(1,2)/SDO(1,2)/ MDCIN1	RC2	TTL	CMOS	General purpose I/O.
	AN6	AN	—	A/D Channel 6 input.
	CPS6	AN	—	Capacitive sensing input 6.
	C12IN2-	AN	—	Comparator C1 or C2 negative input.
	P1D	—	CMOS	PWM output.
	P2B	—	CMOS	PWM output.
	SDO	—	CMOS	SPI data output.
	MDCIN1	ST	—	Modulator Carrier Input 1.

Legend: AN = Analog input or output; CMOS = CMOS compatible input or output; OD = Open Drain
TTL = TTL compatible input; ST = Schmitt Trigger input with CMOS levels; I^2C™ = Schmitt Trigger input with I^2C levels
HV = High Voltage; XTAL = Crystal

Note 1: Pin functions can be moved using the APFCONO and APFCON1 registers (Register 12-1 and Register 12-2).
2: Default function location.

© 2010-2015 Microchip Technology Inc.

TABLE 1-2: PIC16(L)F1824 PINOUT DESCRIPTION (CONTINUED)

Name	Function	Input Type	Output Type	Description
RC3/AN7/CPS7/C12IN3-/ P2A(1,2)/CCP2(1,2)/P1C(1,2)/ $\overline{SS}$(1,2)/MDMIN	RC3	TTL	CMOS	General purpose I/O.
	AN7	AN	—	A/D Channel 7 input.
	CPS7	AN	—	Capacitive sensing input 7.
	C12IN3-	AN	—	Comparator C1 or C2 negative input.
	P2A	—	CMOS	PWM output.
	CCP2	ST	CMOS	Capture/Compare/PWM2.
	P1C	—	CMOS	PWM output.
	$\overline{SS}$	ST	—	Slave Select input.
	MDMIN	ST	—	Modulator source input.
RC4/C2OUT/SRNQ/P1B/TX(1,2)/ CK(1,2)/MDOUT	RC4	TTL	CMOS	General purpose I/O.
	C2OUT	—	CMOS	Comparator C2 output.
	SRNQ	—	CMOS	SR latch inverting output.
	P1B	—	CMOS	PWM output.
	TX	—	CMOS	USART asynchronous transmit.
	CK	ST	CMOS	USART synchronous clock.
	MDOUT	—	CMOS	Modulator output.
RC5/P1A/CCP1/RX(1,2)/DT(1,2)/ MDCIN2	RC5	TTL	CMOS	General purpose I/O.
	P1A	—	CMOS	PWM output.
	CCP1	ST	CMOS	Capture/Compare/PWM1.
	RX	ST	—	USART asynchronous input.
	DT	ST	CMOS	USART synchronous data.
	MDCIN2	ST	—	Modulator Carrier Input 2.
VDD	VDD	Power	—	Positive supply.
VSS	VSS	Power	—	Ground reference.

Legend: AN = Analog input or output CMOS = CMOS compatible input or output OD = Open Drain
TTL = TTL compatible input ST = Schmitt Trigger input with CMOS levels I^2C™ = Schmitt Trigger input with I^2C levels
HV = High Voltage XTAL = Crystal

Note 1: Pin functions can be moved using the APFCONO and APFCON1 registers (Register 12-1 and Register 12-2).
2: Default function location.

TABLE 1-3: PIC16(L)F1828 PINOUT DESCRIPTION

Name	Function	Input Type	Output Type	Description
RA0/AN0/CPS0/C1IN+/VREF-/ DACOUT/ICSPDAT/ICDDAT	RA0	TTL	CMOS	General purpose I/O.
	AN0	AN	—	A/D Channel 0 input.
	CPS0	AN	—	Capacitive sensing input 0.
	C1IN+	AN	—	Comparator C1 positive input.
	VREF-	AN	—	A/D and DAC Negative Voltage Reference input.
	DACOUT	—	AN	Digital-to-Analog Converter output.
	ICSPDAT	ST	CMOS	ICSP™ Data I/O.
	ICDDAT	ST	CMOS	In-Circuit Data I/O.
RA1/AN1/CPS1/C12IN0-/VREF+/ SRI/ICSPCLK/ICDCLK	RA1	TTL	CMOS	General purpose I/O.
	AN1	AN	—	A/D Channel 1 input.
	CPS1	AN	—	Capacitive sensing input 1.
	C12IN0-	AN	—	Comparator C1 or C2 negative input.
	VREF+	AN	—	A/D and DAC Positive Voltage Reference input.
	SRI	ST	—	SR latch input.
	ICSPCLK	ST	—	Serial Programming Clock.
	ICDCLK	ST	—	In-Circuit Debug Clock.
RA2/AN2/CPS2/T0CKI/INT/ C1OUT/SRQ/CCP3/FLT0	RA2	ST	CMOS	General purpose I/O.
	AN2	AN	—	A/D Channel 2 input.
	CPS2	AN	—	Capacitive sensing input 2.
	T0CKI	ST	—	Timer0 clock input.
	INT	ST	—	External interrupt.
	C1OUT	—	CMOS	Comparator C1 output.
	SRQ	—	CMOS	SR latch non-inverting output.
	CCP3	ST	CMOS	Capture/Compare/PWM3.
	FLT0	ST	—	ECCP Auto-Shutdown Fault input.
RA3/T1G(1)/VPP/$\overline{\text{MCLR}}$	RA3	TTL	—	General purpose input.
	T1G	ST	—	Timer1 Gate input.
	VPP	HV	—	Programming voltage.
	$\overline{\text{MCLR}}$	ST	—	Master Clear with internal pull-up.
RA4/AN3/CPS3/OSC2/ CLKOUT/T1OSO/CLKR/P2B(1)/ T1G(1,2)	RA4	TTL	CMOS	General purpose I/O.
	AN3	AN	—	A/D Channel 3 input.
	CPS3	AN	—	Capacitive sensing input 3.
	OSC2	—	CMOS	Comparator C2 output.
	CLKOUT	—	CMOS	FOSC/4 output.
	T1OSO	XTAL	XTAL	Timer1 oscillator connection.
	CLKR	—	CMOS	Clock Reference output.
	P2B	—	CMOS	PWM output.
	T1G	ST	—	Timer1 Gate input.

Legend: AN = Analog input or output CMOS = CMOS compatible input or output OD = Open Drain
TTL = TTL compatible input ST = Schmitt Trigger input with CMOS levels I^2C™ = Schmitt Trigger input with I^2C levels
HV = High Voltage XTAL = Crystal

Note 1: Pin functions can be moved using the APFCONO and APFCON1 registers (Register 12-1 and Register 12-2).
2: Default function location.

© 2010-2015 Microchip Technology Inc.

TABLE 1-3: PIC16(L)F1828 PINOUT DESCRIPTION (CONTINUED)

Name	Function	Input Type	Output Type	Description
RA5/CLKIN/OSC1/T1OSI/ T1CKI/P2A(1)/CCP2(1)	RA5	TTL	CMOS	General purpose I/O.
	CLKIN	CMOS	—	External clock input (EC mode).
	OSC1	XTAL	—	Crystal/Resonator (LP, XT, HS modes).
	T1OSI	XTAL	XTAL	Timer1 oscillator connection.
	T1CKI	ST	—	Timer1 clock input.
	P2A	—	CMOS	PWM output.
	CCP2	ST	CMOS	Capture/Compare/PWM2.
RB4/AN10/CPS10/SDA1/SDI1	RB4	TTL	CMOS	General purpose I/O.
	AN10	AN	—	A/D Channel 10 input.
	CPS10	AN	—	Capacitive sensing input 10.
	SDA1	I^2C	OD	I^2C data input/output.
	SDI1	CMOS	—	SPI data input.
RB5/AN11/CPS11/RX(1,2)/DT(1,2)	RB5	TTL	CMOS	General purpose I/O.
	AN11	AN	—	A/D Channel 11 input.
	CPS11	AN	—	Capacitive sensing input 11.
	RX	ST	—	USART asynchronous input.
	DT	ST	CMOS	USART synchronous data.
RB6/SCL1/SCK1	RB6	TTL	CMOS	General purpose I/O.
	SCL1	I^2C	OD	I^2C™ clock 1.
	SCK1	ST	CMOS	SPI clock 1.
RB7/TX(1,2)/CK(1,2)	RB7	TTL	CMOS	General purpose I/O.
	TX	—	CMOS	USART asynchronous transmit.
	CK	ST	CMOS	USART synchronous clock.
RC0/AN4/CPS4/C2IN+/P1D(1)	RC0	TTL	CMOS	General purpose I/O.
	AN4	AN	—	A/D Channel 4 input.
	CPS4	AN	—	Capacitive sensing input 4.
	C2IN+	AN	—	Comparator C2 positive input.
	P1D	—	CMOS	PWM output.
RC1/AN5/CPS5/C12IN1-/P1C(1)	RC1	TTL	CMOS	General purpose I/O.
	AN5	AN	—	A/D Channel 5 input.
	CPS5	AN	—	Capture/Compare/PWM4.
	C12IN1-	AN	—	Comparator C1 or C2 negative input.
	P1C	—	CMOS	PWM output.
RC2/AN6/CPS6/C12IN2-/ P1D(1,2)/P2B(1,2)/MDCIN1	RC2	TTL	CMOS	General purpose I/O.
	AN6	AN	—	A/D Channel 6 input.
	CPS6	AN	—	Capacitive sensing input 6.
	C12IN2-	AN	—	Comparator C1 or C2 negative input.
	P1D	—	CMOS	PWM output.
	P2B	—	CMOS	PWM output.
	MDCIN1	ST	—	Modulator Carrier Input 1.

Legend: AN = Analog input or output CMOS = CMOS compatible input or output OD = Open Drain
TTL = TTL compatible input ST = Schmitt Trigger input with CMOS levels I^2C™ = Schmitt Trigger input with I^2C levels
HV = High Voltage XTAL = Crystal

Note 1: Pin functions can be moved using the APFCONO and APFCON1 registers (Register 12-1 and Register 12-2).
2: Default function location.

TABLE 1-3: PIC16(L)F1828 PINOUT DESCRIPTION (CONTINUED)

Name	Function	Input Type	Output Type	Description
RC3/AN7/CPS7/C12IN3-/ P2A(1,2)/CCP2(1,2)/P1C(1,2)/ MDMIN	RC3	TTL	CMOS	General purpose I/O.
	AN7	AN	—	A/D Channel 7 input.
	CPS7	AN	—	Capacitive sensing input 7.
	C12IN3-	AN	—	Comparator C1 or C2 negative input.
	P2A	—	CMOS	PWM output.
	CCP2	AN	—	Capture/Compare/PWM2.
	P1C	—	CMOS	PWM output.
	MDMIN	—	CMOS	Modulator source input.
RC4/C2OUT/SRNQ/P1B/TX(1)/ CK(1)/MDOUT	RC4	TTL	CMOS	General purpose I/O.
	C2OUT	—	CMOS	Comparator C2 output.
	SRNQ	—	CMOS	SR latch inverting output.
	P1B	—	CMOS	PWM output.
	TX	—	CMOS	USART asynchronous transmit.
	CK	ST	CMOS	USART synchronous clock.
	MDOUT	—	CMOS	Modulator output.
RC5/P1A/CCP1/RX(1)/DT(1)/ MDCIN2	RC5	TTL	CMOS	General purpose I/O.
	P1A	—	CMOS	PWM output.
	CCP1	ST	CMOS	Capture/Compare/PWM1.
	RX	ST	—	USART asynchronous input.
	DT	ST	CMOS	USART synchronous data.
	MDCIN2	ST	—	Modulator Carrier Input 2.
RC6/AN8/CPS8/CCP4/$\overline{SS}$	RC6	TTL	CMOS	General purpose I/O.
	AN8	AN	—	A/D Channel 8 input.
	CPS8	AN	—	Capacitive sensing input 8.
	CCP4	AN	—	Capture/Compare/PWM4.
	$\overline{SS}$	ST	—	Slave Select input.
RC7/AN9/CPS9/SDO	RC7	TTL	CMOS	General purpose I/O.
	AN9	AN	—	A/D Channel 9 input.
	CPS9	AN	—	Capacitive sensing input 9.
	SDO	—	CMOS	SPI data output.
VDD	VDD	Power	—	Positive supply.
VSS	VSS	Power	—	Ground reference.

Legend: AN = Analog input or output; CMOS = CMOS compatible input or output; OD = Open Drain
TTL = TTL compatible input; ST = Schmitt Trigger input with CMOS levels; I^2C™ = Schmitt Trigger input with I^2C levels
HV = High Voltage; XTAL = Crystal

Note 1: Pin functions can be moved using the APFCONO and APFCON1 registers (Register 12-1 and Register 12-2).
2: Default function location.

© 2010-2015 Microchip Technology Inc.

2.0 ENHANCED MID-RANGE CPU

This family of devices contain an enhanced mid-range 8-bit CPU core. The CPU has 49 instructions. Interrupt capability includes automatic context saving. The hardware stack is 16 levels deep and has Overflow and Underflow Reset capability. Direct, Indirect, and Relative Addressing modes are available. Two File Select Registers (FSRs) provide the ability to read program and data memory.

- Automatic Interrupt Context Saving
- 16-level Stack with Overflow and Underflow
- File Select Registers
- Instruction Set

2.1 Automatic Interrupt Context Saving

During interrupts, certain registers are automatically saved in shadow registers and restored when returning from the interrupt. This saves stack space and user code. See **Section 8.5 "Automatic Context Saving"**, for more information.

2.2 16-level Stack with Overflow and Underflow

These devices have an external stack memory 15 bits wide and 16 words deep. A Stack Overflow or Underflow will set the appropriate bit (STKOVF or STKUNF) in the PCON register, and if enabled will cause a software Reset. See section **Section 3.4 "Stack"** for more details.

2.3 File Select Registers

There are two 16-bit File Select Registers (FSR). FSRs can access all file registers and program memory, which allows one data pointer for all memory. When an FSR points to program memory, there is one additional instruction cycle in instructions using INDF to allow the data to be fetched. General purpose memory can now also be addressed linearly, providing the ability to access contiguous data larger than 80 bytes. There are also new instructions to support the FSRs. See **Section 3.5 "Indirect Addressing"** for more details.

2.4 Instruction Set

There are 49 instructions for the enhanced mid-range CPU to support the features of the CPU. See **Section 29.0 "Instruction Set Summary"** for more details.

© 2010-2015 Microchip Technology Inc.

FIGURE 2-1: CORE BLOCK DIAGRAM

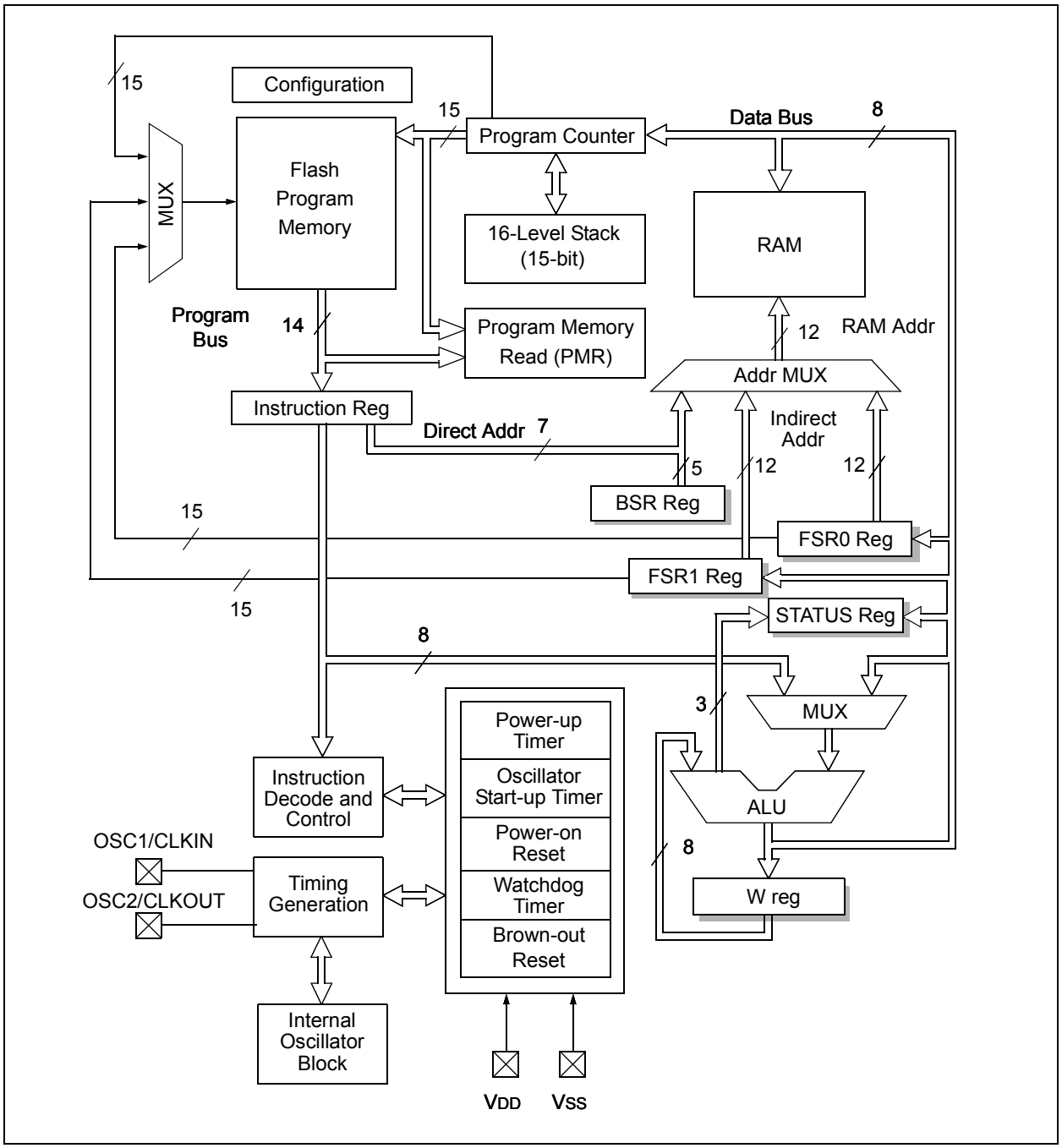

© 2010-2015 Microchip Technology Inc.

3.0 MEMORY ORGANIZATION

These devices contain the following types of memory:

- Program Memory
  - Configuration Words
  - Device ID
  - User ID
  - Flash Program Memory
- Data Memory
  - Core Registers
  - Special Function Registers
  - General Purpose RAM
  - Common RAM
- Data EEPROM memory(1)

Note 1: The data EEPROM memory and the method to access Flash memory through the EECON registers is described in **Section 11.0 "Data EEPROM and Flash Program Memory Control"**.

The following features are associated with access and control of program memory and data memory:

- PCL and PCLATH
- Stack
- Indirect Addressing

3.1 Program Memory Organization

The enhanced mid-range core has a 15-bit program counter capable of addressing a 32K x 14 program memory space. Table 3-1 shows the memory sizes implemented for the PIC16(L)F1824/8 family. Accessing a location above these boundaries will cause a wrap-around within the implemented memory space. The Reset vector is at 0000h and the interrupt vector is at 0004h (see Figure 3-1).

TABLE 3-1: DEVICE SIZES AND ADDRESSES

Device	Program Memory Space (Words)	Last Program Memory Address
PIC16(L)F1824 PIC16(L)F1828	4,096	0FFFh

FIGURE 3-1: PROGRAM MEMORY MAP AND STACK FOR PIC16(L)F1824/8

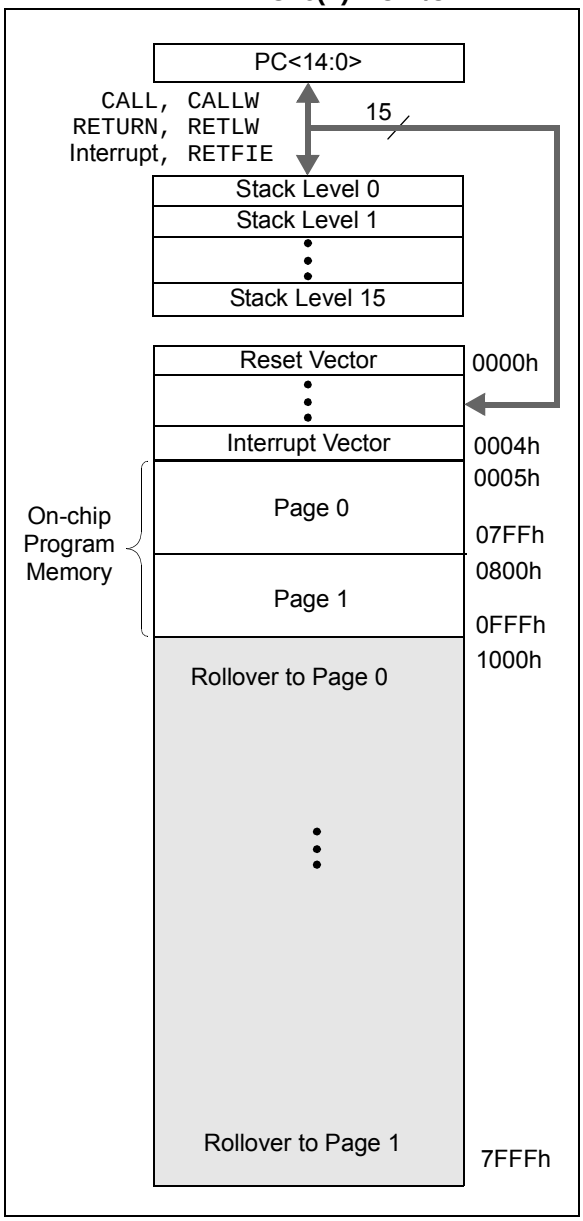

3.1.1 READING PROGRAM MEMORY AS DATA

There are two methods of accessing constants in program memory. The first method is to use tables of RETLW instructions. The second method is to set an FSR to point to the program memory.

3.1.1.1 RETLW Instruction

The RETLW instruction can be used to provide access to tables of constants. The recommended way to create such a table is shown in Example 3-1.

EXAMPLE 3-1: RETLW INSTRUCTION

```
constants
    BRW                 ;Add Index in W to
                        ;program counter to
                        ;select data
    RETLW DATA0         ;Index0 data
    RETLW DATA1         ;Index1 data
    RETLW DATA2
    RETLW DATA3


my_function
    ;… LOTS OF CODE…
    MOVLW       DATA_INDEX
    call constants
    ;… THE CONSTANT IS IN W
```

The BRW instruction makes this type of table very simple to implement. If your code must remain portable with previous generations of microcontrollers, then the BRW instruction is not available so the older table read method must be used.

© 2010-2015 Microchip Technology Inc.

3.1.1.2 Indirect Read with FSR

The program memory can be accessed as data by setting bit 7 of the FSRxH register and reading the matching INDFx register. The MOVIW instruction will place the lower eight bits of the addressed word in the W register. Writes to the program memory cannot be performed via the INDF registers. Instructions that access the program memory via the FSR require one extra instruction cycle to complete. Example 3-2 demonstrates accessing the program memory via an FSR.

The High directive will set bit<7> if a label points to a location in program memory.

EXAMPLE 3-2: ACCESSING PROGRAM MEMORY VIA FSR

```
constants
    RETLW DATA0        ;Index0 data
    RETLW DATA1        ;Index1 data
    RETLW DATA2
    RETLW DATA3
my_function
    ;… LOTS OF CODE…
    MOVLW   LOW constants
    MOVWF   FSR1L
    MOVLW   HIGH constants
    MOVWF   FSR1H
    MOVIW   0[FSR1]
;THE PROGRAM MEMORY IS IN W
```

3.2 Data Memory Organization

The data memory is partitioned in 32 memory banks with 128 bytes in a bank. Each bank consists of (Figure 3-2):

- 12 core registers
- 20 Special Function Registers (SFR)
- Up to 80 bytes of General Purpose RAM (GPR)
- 16 bytes of common RAM

The active bank is selected by writing the bank number into the Bank Select Register (BSR). Unimplemented memory will read as '0'. All data memory can be accessed either directly (via instructions that use the file registers) or indirectly via the two File Select Registers (FSR). See **Section 3.5 "Indirect Addressing"** for more information.

3.2.1 CORE REGISTERS

The core registers contain the registers that directly affect the basic operation. The core registers occupy the first 12 addresses of every data memory bank (addresses x00h/x08h through x0Bh/x8Bh). These registers are listed in Table 3-2 below. For detailed information, see Table 3-3.

TABLE 3-2: CORE REGISTERS

Addresses	BANKx
x00h or x80h	INDF0
x01h or x81h	INDF1
x02h or x82h	PCL
x03h or x83h	STATUS
x04h or x84h	FSR0L
x05h or x85h	FSR0H
x06h or x86h	FSR1L
x07h or x87h	FSR1H
x08h or x88h	BSR
x09h or x89h	WREG
x0Ah or x8Ah	PCLATH
x0Bh or x8Bh	INTCON

3.2.1.1 STATUS Register

The STATUS register, shown in Register 3-1, contains:

- the arithmetic status of the ALU
- the Reset status

The STATUS register can be the destination for any instruction, like any other register. If the STATUS register is the destination for an instruction that affects the Z, DC or C bits, then the write to these three bits is disabled. These bits are set or cleared according to the device logic. Furthermore, the $\overline{TO}$ and $\overline{PD}$ bits are not writable. Therefore, the result of an instruction with the STATUS register as destination may be different than intended.

For example, `CLRF STATUS` will clear the upper three bits and set the Z bit. This leaves the STATUS register as '`000u u1uu`' (where u = unchanged).

It is recommended, therefore, that only `BCF`, `BSF`, `SWAPF` and `MOVWF` instructions are used to alter the STATUS register, because these instructions do not affect any Status bits. For other instructions not affecting any Status bits (Refer to **Section 29.0 "Instruction Set Summary"**).

Note 1: The C and DC bits operate as $\overline{Borrow}$ and $\overline{Digit\ Borrow}$ out bits, respectively, in subtraction.

REGISTER 3-1: STATUS: STATUS REGISTER

U-0	U-0	U-0	R-1/q	R-1/q	R/W-0/u	R/W-0/u	R/W-0/u
—	—	—	$\overline{TO}$	$\overline{PD}$	Z	DC(1)	C(1)
bit 7							bit 0

Legend:		
R = Readable bit	W = Writable bit	U = Unimplemented bit, read as '0'
u = Bit is unchanged	x = Bit is unknown	-n/n = Value at POR and BOR/Value at all other Resets
'1' = Bit is set	'0' = Bit is cleared	q = Value depends on condition

bit 7-5 **Unimplemented:** Read as '0'

bit 4 **$\overline{TO}$:** Time-out bit
1 = After power-up, `CLRWDT` instruction or `SLEEP` instruction
0 = A WDT time-out occurred

bit 3 **$\overline{PD}$:** Power-down bit
1 = After power-up or by the `CLRWDT` instruction
0 = By execution of the `SLEEP` instruction

bit 2 **Z:** Zero bit
1 = The result of an arithmetic or logic operation is zero
0 = The result of an arithmetic or logic operation is not zero

bit 1 **DC:** Digit Carry/$\overline{Digit\ Borrow}$ bit (`ADDWF`, `ADDLW`, `SUBLW`, `SUBWF` instructions)(1)
1 = A carry-out from the 4th low-order bit of the result occurred
0 = No carry-out from the 4th low-order bit of the result

bit 0 **C:** Carry/$\overline{Borrow}$ bit (`ADDWF`, `ADDLW`, `SUBLW`, `SUBWF` instructions)(1)
1 = A carry-out from the Most Significant bit of the result occurred
0 = No carry-out from the Most Significant bit of the result occurred

Note 1: For $\overline{Borrow}$, the polarity is reversed. A subtraction is executed by adding the two's complement of the second operand. For rotate (`RRF`, `RLF`) instructions, this bit is loaded with either the high-order or low-order bit of the source register.

© 2010-2015 Microchip Technology Inc.

3.2.2 SPECIAL FUNCTION REGISTER

The Special Function Registers are registers used by the application to control the desired operation of peripheral functions in the device. The Special Function Registers occupy the 20 bytes after the core registers of every data memory bank (addresses x0Ch/x8Ch through x1Fh/x9Fh). The registers associated with the operation of the peripherals are described in the appropriate peripheral chapter of this data sheet.

3.2.3 GENERAL PURPOSE RAM

There are up to 80 bytes of GPR in each data memory bank. The Special Function Registers occupy the 20 bytes after the core registers of every data memory bank (addresses x0Ch/x8Ch through x1Fh/x9Fh)

3.2.3.1 Linear Access to GPR

The general purpose RAM can be accessed in a non-banked method via the FSRs. This can simplify access to large memory structures. See **Section 3.5.2 "Linear Data Memory"** for more information.

3.2.4 COMMON RAM

There are 16 bytes of common RAM accessible from all banks.

FIGURE 3-2: BANKED MEMORY PARTITIONING

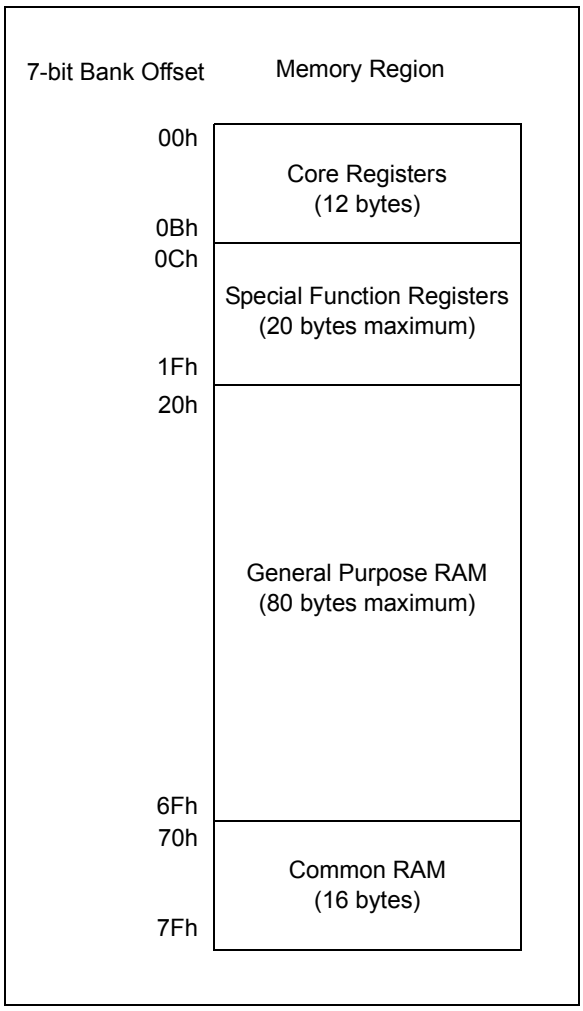

3.2.5 DEVICE MEMORY MAPS

The memory maps for the device family are as shown in Table 3-3.

TABLE 3-3: MEMORY MAP TABLES

Device	Banks	Table No.
PIC16(L)F1824 PIC16(L)F1828	0-7	Table 3-4
	8-15	Table 3-5
	16-23	Table 3-6
	24-31	Table 3-7
	31	Table 3-8

TABLE 3-4: PIC16F1824/PIC16F1828 MEMORY MAP, BANKS 0-7

BANK 0		BANK 1		BANK 2		BANK 3		BANK 4		BANK 5		BANK 6		BANK 7	
000h	INDF0	080h	INDF0	100h	INDF0	180h	INDF0	200h	INDF0	280h	INDF0	300h	INDF0	380h	INDF0
001h	INDF1	081h	INDF1	101h	INDF1	181h	INDF1	201h	INDF1	281h	INDF1	301h	INDF1	381h	INDF1
002h	PCL	082h	PCL	102h	PCL	182h	PCL	202h	PCL	282h	PCL	302h	PCL	382h	PCL
003h	STATUS	083h	STATUS	103h	STATUS	183h	STATUS	203h	STATUS	283h	STATUS	303h	STATUS	383h	STATUS
004h	FSR0L	084h	FSR0L	104h	FSR0L	184h	FSR0L	204h	FSR0L	284h	FSR0L	304h	FSR0L	384h	FSR0L
005h	FSR0H	085h	FSR0H	105h	FSR0H	185h	FSR0H	205h	FSR0H	285h	FSR0H	305h	FSR0H	385h	FSR0H
006h	FSR1L	086h	FSR1L	106h	FSR1L	186h	FSR1L	206h	FSR1L	286h	FSR1L	306h	FSR1L	386h	FSR1L
007h	FSR1H	087h	FSR1H	107h	FSR1H	187h	FSR1H	207h	FSR1H	287h	FSR1H	307h	FSR1H	387h	FSR1H
008h	BSR	088h	BSR	108h	BSR	188h	BSR	208h	BSR	288h	BSR	308h	BSR	388h	BSR
009h	WREG	089h	WREG	109h	WREG	189h	WREG	209h	WREG	289h	WREG	309h	WREG	389h	WREG
00Ah	PCLATH	08Ah	PCLATH	10Ah	PCLATH	18Ah	PCLATH	20Ah	PCLATH	28Ah	PCLATH	30Ah	PCLATH	38Ah	PCLATH
00Bh	INTCON	08Bh	INTCON	10Bh	INTCON	18Bh	INTCON	20Bh	INTCON	28Bh	INTCON	30Bh	INTCON	38Bh	INTCON
00Ch	PORTA	08Ch	TRISA	10Ch	LATA	18Ch	ANSELA	20Ch	WPUA	28Ch	—	30Ch	—	38Ch	INLVLA
00Dh	PORTB(1)	08Dh	TRISB(1)	10Dh	LATB(1)	18Dh	ANSELB(1)	20Dh	WPUB(1)	28Dh	—	30Dh	—	38Dh	INLVLB(1)
00Eh	PORTC	08Eh	TRISC	10Eh	LATC	18Eh	ANSELC	20Eh	WPUC	28Eh	—	30Eh	—	38Eh	INLVLC
00Fh	—	08Fh	—	10Fh	—	18Fh	—	20Fh	—	28Fh	—	30Fh	—	38Fh	—
010h	—	090h	—	110h	—	190h	—	210h	—	290h	—	310h	—	390h	—
011h	PIR1	091h	PIE1	111h	CM1CON0	191h	EEADRL	211h	SSP1BUF	291h	CCPR1L	311h	CCPR3L	391h	IOCAP
012h	PIR2	092h	PIE2	112h	CM1CON1	192h	EEADRH	212h	SSP1ADD	292h	CCPR1H	312h	CCPR3H	392h	IOCAN
013h	PIR3	093h	PIE3	113h	CM2CON0	193h	EEDATL	213h	SSP1MSK	293h	CCP1CON	313h	CCP3CON	393h	IOCAF
014h	—	094h	—	114h	CM2CON1	194h	EEDATH	214h	SSP1STAT	294h	PWM1CON	314h	—	394h	IOCBP(1)
015h	TMR0	095h	OPTION	115h	CMOUT	195h	EECON1	215h	SSP1CON	295h	CCP1AS	315h	—	395h	IOCBN(1)
016h	TMR1L	096h	PCON	116h	BORCON	196h	EECON2	216h	SSP1CON2	296h	PSTR1CON	316h	—	396h	IOCBF(1)
017h	TMR1H	097h	WDTCON	117h	FVRCON	197h	—	217h	SSP1CON3	297h	—	317h	—	397h	—
018h	T1CON	098h	OSCTUNE	118h	DACCON0	198h	—	218h	—	298h	CCPR2L	318h	CCPR4L	398h	—
019h	T1GCON	099h	OSCCON	119h	DACCON1	199h	RCREG	219h	—	299h	CCPR2H	319h	CCPR4H	399h	—
01Ah	TMR2	09Ah	OSCSTAT	11Ah	SRCON0	19Ah	TXREG	21Ah	—	29Ah	CCP2CON	31Ah	CCP4CON	39Ah	CLKRCON
01Bh	PR2	09Bh	ADRESL	11Bh	SRCON1	19Bh	SPBRGL	21Bh	—	29Bh	PWM2CON	31Bh	—	39Bh	—
01Ch	T2CON	09Ch	ADRESH	11Ch	—	19Ch	SPBRGH	21Ch	—	29Ch	CCP2AS	31Ch	—	39Ch	MDCON
01Dh	—	09Dh	ADCON0	11Dh	APFCON0	19Dh	RCSTA	21Dh	—	29Dh	PSTR2CON	31Dh	—	39Dh	MDSRC
01Eh	CPSCON0	09Eh	ADCON1	11Eh	APFCON1	19Eh	TXSTA	21Eh	—	29Eh	CCPTMRS0	31Eh	—	39Eh	MDCARL
01Fh	CPSCON1	09Fh	—	11Fh	—	19Fh	BAUDCON	21Fh	—	29Fh	—	31Fh	—	39Fh	MDCARH
020h	General Purpose Register 80 Bytes	0A0h	General Purpose Register 80 Bytes	120h	General Purpose Register 80 Bytes	1A0h	Unimplemented Read as '0'	220h	Unimplemented Read as '0'	2A0h	Unimplemented Read as '0'	320h	Unimplemented Read as '0'	3A0h	Unimplemented Read as '0'
06Fh		0EFh		16Fh		1EFh		26Fh		2EFh		36Fh		3EFh	
070h	Common RAM	0F0h	Accesses 70h – 7Fh	170h	Accesses 70h – 7Fh	1F0h	Accesses 70h – 7Fh	270h	Accesses 70h – 7Fh	2F0h	Accesses 70h – 7Fh	370h	Accesses 70h – 7Fh	3F0h	Accesses 70h – 7Fh
07Fh		0FFh		17Fh		1FFh		27Fh		2FFh		37Fh		3FFh	

Legend: = Unimplemented data memory locations, read as '0'.

Note 1: Available only on PIC16(L)F1828.

© 2010-2015 Microchip Technology Inc.

TABLE 3-5: PIC16F1824/PIC16F1828 MEMORY MAP, BANKS 8-15

BANK 8		BANK 9		BANK 10		BANK 11		BANK 12		BANK 13		BANK 14		BANK 15	
400h	INDF0	480h	INDF0	500h	INDF0	580h	INDF0	600h	INDF0	680h	INDF0	700h	INDF0	780h	INDF0
401h	INDF1	481h	INDF1	501h	INDF1	581h	INDF1	601h	INDF1	681h	INDF1	701h	INDF1	781h	INDF1
402h	PCL	482h	PCL	502h	PCL	582h	PCL	602h	PCL	682h	PCL	702h	PCL	782h	PCL
403h	STATUS	483h	STATUS	503h	STATUS	583h	STATUS	603h	STATUS	683h	STATUS	703h	STATUS	783h	STATUS
404h	FSR0L	484h	FSR0L	504h	FSR0L	584h	FSR0L	604h	FSR0L	684h	FSR0L	704h	FSR0L	784h	FSR0L
405h	FSR0H	485h	FSR0H	505h	FSR0H	585h	FSR0H	605h	FSR0H	685h	FSR0H	705h	FSR0H	785h	FSR0H
406h	FSR1L	486h	FSR1L	506h	FSR1L	586h	FSR1L	606h	FSR1L	686h	FSR1L	706h	FSR1L	786h	FSR1L
407h	FSR1H	487h	FSR1H	507h	FSR1H	587h	FSR1H	607h	FSR1H	687h	FSR1H	707h	FSR1H	787h	FSR1H
408h	BSR	488h	BSR	508h	BSR	588h	BSR	608h	BSR	688h	BSR	708h	BSR	788h	BSR
409h	WREG	489h	WREG	509h	WREG	589h	WREG	609h	WREG	689h	WREG	709h	WREG	789h	WREG
40Ah	PCLATH	48Ah	PCLATH	50Ah	PCLATH	58Ah	PCLATH	60Ah	PCLATH	68Ah	PCLATH	70Ah	PCLATH	78Ah	PCLATH
40Bh	INTCON	48Bh	INTCON	50Bh	INTCON	58Bh	INTCON	60Bh	INTCON	68Bh	INTCON	70Bh	INTCON	78Bh	INTCON
40Ch	—	48Ch	—	50Ch	—	58Ch	—	60Ch	—	68Ch	—	70Ch	—	78Ch	—
40Dh	—	48Dh	—	50Dh	—	58Dh	—	60Dh	—	68Dh	—	70Dh	—	78Dh	—
40Eh	—	48Eh	—	50Eh	—	58Eh	—	60Eh	—	68Eh	—	70Eh	—	78Eh	—
40Fh	—	48Fh	—	50Fh	—	58Fh	—	60Fh	—	68Fh	—	70Fh	—	78Fh	—
410h	—	490h	—	510h	—	590h	—	610h	—	690h	—	710h	—	790h	—
411h	—	491h	—	511h	—	591h	—	611h	—	691h	—	711h	—	791h	—
412h	—	492h	—	512h	—	592h	—	612h	—	692h	—	712h	—	792h	—
413h	—	493h	—	513h	—	593h	—	613h	—	693h	—	713h	—	793h	—
414h	—	494h	—	514h	—	594h	—	614h	—	694h	—	714h	—	794h	—
415h	TMR4	495h	—	515h	—	595h	—	615h	—	695h	—	715h	—	795h	—
416h	PR4	496h	—	516h	—	596h	—	616h	—	696h	—	716h	—	796h	—
417h	T4CON	497h	—	517h	—	597h	—	617h	—	697h	—	717h	—	797h	—
418h	—	498h	—	518h	—	598h	—	618h	—	698h	—	718h	—	798h	—
419h	—	499h	—	519h	—	599h	—	619h	—	699h	—	719h	—	799h	—
41Ah	—	49Ah	—	51Ah	—	59Ah	—	61Ah	—	69Ah	—	71Ah	—	79Ah	—
41Bh	—	49Bh	—	51Bh	—	59Bh	—	61Bh	—	69Bh	—	71Bh	—	79Bh	—
41Ch	TMR6	49Ch	—	51Ch	—	59Ch	—	61Ch	—	69Ch	—	71Ch	—	79Ch	—
41Dh	PR6	49Dh	—	51Dh	—	59Dh	—	61Dh	—	69Dh	—	71Dh	—	79Dh	—
41Eh	T6CON	49Eh	—	51Eh	—	59Eh	—	61Eh	—	69Eh	—	71Eh	—	79Eh	—
41Fh	—	49Fh	—	51Fh	—	59Fh	—	61Fh	—	69Fh	—	71Fh	—	79Fh	—
420h	Unimplemented Read as '0'	4A0h	Unimplemented Read as '0'	520h	Unimplemented Read as '0'	5A0h	Unimplemented Read as '0'	620h	Unimplemented Read as '0'	6A0h	Unimplemented Read as '0'	720h	Unimplemented Read as '0'	7A0h	Unimplemented Read as '0'
46Fh		4EFh		56Fh		5EFh		66Fh		6EFh		76Fh		7EFh	
470h	Accesses 70h – 7Fh	4F0h	Accesses 70h – 7Fh	570h	Accesses 70h – 7Fh	5F0h	Accesses 70h – 7Fh	670h	Accesses 70h – 7Fh	6F0h	Accesses 70h – 7Fh	770h	Accesses 70h – 7Fh	7F0h	Accesses 70h – 7Fh
47Fh		4FFh		57Fh		5FFh		67Fh		6FFh		77Fh		7FFh	

Legend: = Unimplemented data memory locations, read as '0'.

© 2010-2015 Microchip Technology Inc.

TABLE 3-6: PIC16(L)F1824/8 MEMORY MAP, BANKS 16-23

BANK 16		BANK 17		BANK 18		BANK 19		BANK 20		BANK 21		BANK 22		BANK 23	
800h	INDF0	880h	INDF0	900h	INDF0	980h	INDF0	A00h	INDF0	A80h	INDF0	B00h	INDF0	B80h	INDF0
801h	INDF1	881h	INDF1	901h	INDF1	981h	INDF1	A01h	INDF1	A81h	INDF1	B01h	INDF1	B81h	INDF1
802h	PCL	882h	PCL	902h	PCL	982h	PCL	A02h	PCL	A82h	PCL	B02h	PCL	B82h	PCL
803h	STATUS	883h	STATUS	903h	STATUS	983h	STATUS	A03h	STATUS	A83h	STATUS	B03h	STATUS	B83h	STATUS
804h	FSR0L	884h	FSR0L	904h	FSR0L	984h	FSR0L	A04h	FSR0L	A84h	FSR0L	B04h	FSR0L	B84h	FSR0L
805h	FSR0H	885h	FSR0H	905h	FSR0H	985h	FSR0H	A05h	FSR0H	A85h	FSR0H	B05h	FSR0H	B85h	FSR0H
806h	FSR1L	886h	FSR1L	906h	FSR1L	986h	FSR1L	A06h	FSR1L	A86h	FSR1L	B06h	FSR1L	B86h	FSR1L
807h	FSR1H	887h	FSR1H	907h	FSR1H	987h	FSR1H	A07h	FSR1H	A87h	FSR1H	B07h	FSR1H	B87h	FSR1H
808h	BSR	888h	BSR	908h	BSR	988h	BSR	A08h	BSR	A88h	BSR	B08h	BSR	B88h	BSR
809h	WREG	889h	WREG	909h	WREG	989h	WREG	A09h	WREG	A89h	WREG	B09h	WREG	B89h	WREG
80Ah	PCLATH	88Ah	PCLATH	90Ah	PCLATH	98Ah	PCLATH	A0Ah	PCLATH	A8Ah	PCLATH	B0Ah	PCLATH	B8Ah	PCLATH
80Bh	INTCON	88Bh	INTCON	90Bh	INTCON	98Bh	INTCON	A0Bh	INTCON	A8Bh	INTCON	B0Bh	INTCON	B8Bh	INTCON
80Ch	—	88Ch	—	90Ch	—	98Ch	—	A0Ch	—	A8Ch	—	B0Ch	—	B8Ch	—
80Dh	—	88Dh	—	90Dh	—	98Dh	—	A0Dh	—	A8Dh	—	B0Dh	—	B8Dh	—
80Eh	—	88Eh	—	90Eh	—	98Eh	—	A0Eh	—	A8Eh	—	B0Eh	—	B8Eh	—
80Fh	—	88Fh	—	90Fh	—	98Fh	—	A0Fh	—	A8Fh	—	B0Fh	—	B8Fh	—
810h	—	890h	—	910h	—	990h	—	A10h	—	A90h	—	B10h	—	B90h	—
811h	—	891h	—	911h	—	991h	—	A11h	—	A91h	—	B11h	—	B91h	—
812h	—	892h	—	912h	—	992h	—	A12h	—	A92h	—	B12h	—	B92h	—
813h	—	893h	—	913h	—	993h	—	A13h	—	A93h	—	B13h	—	B93h	—
814h	—	894h	—	914h	—	994h	—	A14h	—	A94h	—	B14h	—	B94h	—
815h	—	895h	—	915h	—	995h	—	A15h	—	A95h	—	B15h	—	B95h	—
816h	—	896h	—	916h	—	996h	—	A16h	—	A96h	—	B16h	—	B96h	—
817h	—	897h	—	917h	—	997h	—	A17h	—	A97h	—	B17h	—	B97h	—
818h	—	898h	—	918h	—	998h	—	A18h	—	A98h	—	B18h	—	B98h	—
819h	—	899h	—	919h	—	999h	—	A19h	—	A99h	—	B19h	—	B99h	—
81Ah	—	89Ah	—	91Ah	—	99Ah	—	A1Ah	—	A9Ah	—	B1Ah	—	B9Ah	—
81Bh	—	89Bh	—	91Bh	—	99Bh	—	A1Bh	—	A9Bh	—	B1Bh	—	B9Bh	—
81Ch	—	89Ch	—	91Ch	—	99Ch	—	A1Ch	—	A9Ch	—	B1Ch	—	B9Ch	—
81Dh	—	89Dh	—	91Dh	—	99Dh	—	A1Dh	—	A9Dh	—	B1Dh	—	B9Dh	—
81Eh	—	89Eh	—	91Eh	—	99Eh	—	A1Eh	—	A9Eh	—	B1Eh	—	B9Eh	—
81Fh	—	89Fh	—	91Fh	—	99Fh	—	A1Fh	—	A9Fh	—	B1Fh	—	B9Fh	—
820h	Unimplemented Read as '0'	8A0h	Unimplemented Read as '0'	920h	Unimplemented Read as '0'	9A0h	Unimplemented Read as '0'	A20h	Unimplemented Read as '0'	AA0h	Unimplemented Read as '0'	B20h	Unimplemented Read as '0'	BA0h	Unimplemented Read as '0'
86Fh		8EFh		96Fh		9EFh		A6Fh		AEFh		B6Fh		BEFh	
870h	Accesses 70h – 7Fh	8F0h	Accesses 70h – 7Fh	970h	Accesses 70h – 7Fh	9F0h	Accesses 70h – 7Fh	A70h	Accesses 70h – 7Fh	AF0h	Accesses 70h – 7Fh	B70h	Accesses 70h – 7Fh	BF0h	Accesses 70h – 7Fh
87Fh		8FFh		97Fh		9FFh		A7Fh		AFFh		B7Fh		BFFh	

Legend: = Unimplemented data memory locations, read as '0'.

© 2010-2015 Microchip Technology Inc.

TABLE 3-7: PIC16(L)F1824/8 MEMORY MAP, BANKS 24-31

BANK 24		BANK 25		BANK 26		BANK 27		BANK 28		BANK 29		BANK 30		BANK 31	
C00h	INDF0	C80h	INDF0	D00h	INDF0	D80h	INDF0	E00h	INDF0	E80h	INDF0	F00h	INDF0	F80h	INDF0
C01h	INDF1	C81h	INDF1	D01h	INDF1	D81h	INDF1	E01h	INDF1	E81h	INDF1	F01h	INDF1	F81h	INDF1
C02h	PCL	C82h	PCL	D02h	PCL	D82h	PCL	E02h	PCL	E82h	PCL	F02h	PCL	F82h	PCL
C03h	STATUS	C83h	STATUS	D03h	STATUS	D83h	STATUS	E03h	STATUS	E83h	STATUS	F03h	STATUS	F83h	STATUS
C04h	FSR0L	C84h	FSR0L	D04h	FSR0L	D84h	FSR0L	E04h	FSR0L	E84h	FSR0L	F04h	FSR0L	F84h	FSR0L
C05h	FSR0H	C85h	FSR0H	D05h	FSR0H	D85h	FSR0H	E05h	FSR0H	E85h	FSR0H	F05h	FSR0H	F85h	FSR0H
C06h	FSR1L	C86h	FSR1L	D06h	FSR1L	D86h	FSR1L	E06h	FSR1L	E86h	FSR1L	F06h	FSR1L	F86h	FSR1L
C07h	FSR1H	C87h	FSR1H	D07h	FSR1H	D87h	FSR1H	E07h	FSR1H	E87h	FSR1H	F07h	FSR1H	F87h	FSR1H
C08h	BSR	C88h	BSR	D08h	BSR	D88h	BSR	E08h	BSR	E88h	BSR	F08h	BSR	F88h	BSR
C09h	WREG	C89h	WREG	D09h	WREG	D89h	WREG	E09h	WREG	E89h	WREG	F09h	WREG	F89h	WREG
C0Ah	PCLATH	C8Ah	PCLATH	D0Ah	PCLATH	D8Ah	PCLATH	E0Ah	PCLATH	E8Ah	PCLATH	F0Ah	PCLATH	F8Ah	PCLATH
C0Bh	INTCON	C8Bh	INTCON	D0Bh	INTCON	D8Bh	INTCON	E0Bh	INTCON	E8Bh	INTCON	F0Bh	INTCON	F8Bh	INTCON
C0Ch	—	C8Ch	—	D0Ch	—	D8Ch	—	E0Ch	—	E8Ch	—	F0Ch	—	F8Ch	See Table 3-8 for register mapping details
C0Dh	—	C8Dh	—	D0Dh	—	D8Dh	—	E0Dh	—	E8Dh	—	F0Dh	—	F8Dh	
C0Eh	—	C8Eh	—	D0Eh	—	D8Eh	—	E0Eh	—	E8Eh	—	F0Eh	—	F8Eh	
C0Fh	—	C8Fh	—	D0Fh	—	D8Fh	—	E0Fh	—	E8Fh	—	F0Fh	—	F8Fh	
C10h	—	C90h	—	D10h	—	D90h	—	E10h	—	E90h	—	F10h	—	F90h	
C11h	—	C91h	—	D11h	—	D91h	—	E11h	—	E91h	—	F11h	—	F91h	
C12h	—	C92h	—	D12h	—	D92h	—	E12h	—	E92h	—	F12h	—	F92h	
C13h	—	C93h	—	D13h	—	D93h	—	E13h	—	E93h	—	F13h	—	F93h	
C14h	—	C94h	—	D14h	—	D94h	—	E14h	—	E94h	—	F14h	—	F94h	
C15h	—	C95h	—	D15h	—	D95h	—	E15h	—	E95h	—	F15h	—	F95h	
C16h	—	C96h	—	D16h	—	D96h	—	E16h	—	E96h	—	F16h	—	F96h	
C17h	—	C97h	—	D17h	—	D97h	—	E17h	—	E97h	—	F17h	—	F97h	
C18h	—	C98h	—	D18h	—	D98h	—	E18h	—	E98h	—	F18h	—	F98h	
C19h	—	C99h	—	D19h	—	D99h	—	E19h	—	E99h	—	F19h	—	F99h	
C1Ah	—	C9Ah	—	D1Ah	—	D9Ah	—	E1Ah	—	E9Ah	—	F1Ah	—	F9Ah	
C1Bh	—	C9Bh	—	D1Bh	—	D9Bh	—	E1Bh	—	E9Bh	—	F1Bh	—	F9Bh	
C1Ch	—	C9Ch	—	D1Ch	—	D9Ch	—	E1Ch	—	E9Ch	—	F1Ch	—	F9Ch	
C1Dh	—	C9Dh	—	D1Dh	—	D9Dh	—	E1Dh	—	E9Dh	—	F1Dh	—	F9Dh	
C1Eh	—	C9Eh	—	D1Eh	—	D9Eh	—	E1Eh	—	E9Eh	—	F1Eh	—	F9Eh	
C1Fh	—	C9Fh	—	D1Fh	—	D9Fh	—	E1Fh	—	E9Fh	—	F1Fh	—	F9Fh	
C20h	Unimplemented Read as '0'	CA0h	Unimplemented Read as '0'	D20h	Unimplemented Read as '0'	DA0h	Unimplemented Read as '0'	E20h	Unimplemented Read as '0'	EA0h	Unimplemented Read as '0'	F20h	Unimplemented Read as '0'	FA0h	
C6Fh		CEFh		D6Fh		DEFh		E6Fh		EEFh		F6Fh		FEFh	
C70h	Accesses 70h – 7Fh	CF0h	Accesses 70h – 7Fh	D70h	Accesses 70h – 7Fh	DF0h	Accesses 70h – 7Fh	E70h	Accesses 70h – 7Fh	EF0h	Accesses 70h – 7Fh	F70h	Accesses 70h – 7Fh	FF0h	Accesses 70h – 7Fh
CFFh		CFFh		D7Fh		DFFh		E7Fh		EFFh		F7Fh		FFFh	

Legend: = Unimplemented data memory locations, read as '0'.

© 2010-2015 Microchip Technology Inc.

TABLE 3-8: PIC16(L)F1824/8 MEMORY MAP, BANK 31

Bank 31	
FA0h	Unimplemented Read as '0'
FE3h	
FE4h	STATUS_SHAD
FE5h	WREG_SHAD
FE6h	BSR_SHAD
FE7h	PCLATH_SHAD
FE8h	FSR0L_SHAD
FE9h	FSR0H_SHAD
FEAh	FSR1L_SHAD
FEBh	FSR1H_SHAD
FECh	—
FEDh	STKPTR
FEEh	TOSL
FEFh	TOSH

Legend: = Unimplemented data memory locations, read as '0'.

3.2.6 SPECIAL FUNCTION REGISTERS SUMMARY

The Special Function Register Summary for the device family are as follows:

Device	Bank(s)	Page No.
PIC16(L)F1824 PIC16(L)F1828	0	29
	1	30
	2	31
	3	32
	4	33
	5	34
	6	35
	7	36
	8	37
	9-30	38
	31	39

© 2010-2015 Microchip Technology Inc.

TABLE 3-9: SPECIAL FUNCTION REGISTER SUMMARY

Address	Name	Bit 7	Bit 6	Bit 5	Bit 4	Bit 3	Bit 2	Bit 1	Bit 0	Value on POR, BOR	Value on all other Resets
Bank 0											
000h(1)	INDF0	Addressing this location uses contents of FSR0H/FSR0L to address data memory (not a physical register)								xxxx xxxx	xxxx xxxx
001h(1)	INDF1	Addressing this location uses contents of FSR1H/FSR1L to address data memory (not a physical register)								xxxx xxxx	xxxx xxxx
002h(1)	PCL	Program Counter (PC) Least Significant Byte								0000 0000	0000 0000
003h(1)	STATUS	—	—	—	$\overline{TO}$	$\overline{PD}$	Z	DC	C	---1 1000	---q quuu
004h(1)	FSR0L	Indirect Data Memory Address 0 Low Pointer								0000 0000	uuuu uuuu
005h(1)	FSR0H	Indirect Data Memory Address 0 High Pointer								0000 0000	0000 0000
006h(1)	FSR1L	Indirect Data Memory Address 1 Low Pointer								0000 0000	uuuu uuuu
007h(1)	FSR1H	Indirect Data Memory Address 1 High Pointer								0000 0000	0000 0000
008h(1)	BSR	—	—	—	BSR<4:0>					---0 0000	---0 0000
009h(1)	WREG	Working Register								0000 0000	uuuu uuuu
00Ah(1)	PCLATH	—	Write Buffer for the upper 7 bits of the Program Counter							-000 0000	-000 0000
00Bh(1)	INTCON	GIE	PEIE	TMR0IE	INTE	IOCIE	TMR0IF	INTF	IOCIF	0000 000x	0000 000u
00Ch	PORTA	—	—	RA5	RA4	RA3	RA2	RA1	RA0	--xx xxxx	--xx xxxx
00Dh	PORTB(2)	RB7	RB6	RB5	RB4	—	—	—	—	xxxx ----	xxxx ----
00Eh	PORTC	RC7(2)	RC6(2)	RC5	RC4	RC3	RC2	RC1	RC0	xxxx xxxx	xxxx xxxx
00Fh	—	Unimplemented								—	—
010h	—	Unimplemented								—	—
011h	PIR1	TMR1GIF	ADIF	RCIF	TXIF	SSP1IF	CCP1IF	TMR2IF	TMR1IF	0000 0000	0000 0000
012h	PIR2	OSFIF	C2IF	C1IF	EEIF	BCL1IF	—	—	CCP2IF	0000 0--0	0000 0--0
013h	PIR3	—	—	CCP4IF	CCP3IF	TMR6IF	—	TMR4IF	—	--00 0-0-	--00 0-0-
014h	—	Unimplemented								—	—
015h	TMR0	Timer0 Module Register								xxxx xxxx	uuuu uuuu
016h	TMR1L	Holding Register for the Least Significant Byte of the 16-bit TMR1 Register								xxxx xxxx	uuuu uuuu
017h	TMR1H	Holding Register for the Most Significant Byte of the 16-bit TMR1 Register								xxxx xxxx	uuuu uuuu
018h	T1CON	TMR1CS1	TMR1CS0	T1CKPS<1:0>		T1OSCEN	$\overline{T1SYNC}$	—	TMR1ON	0000 00-0	uuuu uu-u
019h	T1GCON	TMR1GE	T1GPOL	T1GTM	T1GSPM	$\overline{T1GGO}$/DONE	T1GVAL	T1GSS<1:0>		0000 0x00	uuuu uxuu
01Ah	TMR2	Timer2 Module Register								0000 0000	0000 0000
01Bh	PR2	Timer2 Period Register								1111 1111	1111 1111
01Ch	T2CON	—	T2OUTPS<3:0>				TMR2ON	T2CKPS<1:0>		-000 0000	-000 0000
01Dh	—	Unimplemented								—	—
01Eh	CPSCON0	CPSON	CPSRM	—	—	CPSRNG<1:0>		CPSOUT	T0XCS	00-- 0000	00-- 0000
01Fh	CPSCON1	—	—	—	—	CPSCH<3:0>				---- 0000	---- 0000

Legend: x = unknown, u = unchanged, q = value depends on condition, - = unimplemented, r = reserved. Shaded locations are unimplemented, read as '0'.

Note 1: These registers can be addressed from any bank.
2: PIC16(L)F1828 only.
3: PIC16(L)F1824 only.
4: Unimplemented, read as '1'.

TABLE 3-9: SPECIAL FUNCTION REGISTER SUMMARY (CONTINUED)

Address	Name	Bit 7	Bit 6	Bit 5	Bit 4	Bit 3	Bit 2	Bit 1	Bit 0	Value on POR, BOR	Value on all other Resets
Bank 1											
080h(1)	INDF0	Addressing this location uses contents of FSR0H/FSR0L to address data memory (not a physical register)								xxxx xxxx	xxxx xxxx
081h(1)	INDF1	Addressing this location uses contents of FSR1H/FSR1L to address data memory (not a physical register)								xxxx xxxx	xxxx xxxx
082h(1)	PCL	Program Counter (PC) Least Significant Byte								0000 0000	0000 0000
083h(1)	STATUS	—	—	—	TO	PD	Z	DC	C	---1 1000	---q quuu
084h(1)	FSR0L	Indirect Data Memory Address 0 Low Pointer								0000 0000	uuuu uuuu
085h(1)	FSR0H	Indirect Data Memory Address 0 High Pointer								0000 0000	0000 0000
086h(1)	FSR1L	Indirect Data Memory Address 1 Low Pointer								0000 0000	uuuu uuuu
087h(1)	FSR1H	Indirect Data Memory Address 1 High Pointer								0000 0000	0000 0000
088h(1)	BSR	—	—	—	BSR<4:0>					---0 0000	---0 0000
089h(1)	WREG	Working Register								0000 0000	uuuu uuuu
08Ah(1)	PCLATH	—	Write Buffer for the upper 7 bits of the Program Counter							-000 0000	-000 0000
08Bh(1)	INTCON	GIE	PEIE	TMR0IE	INTE	IOCIE	TMR0IF	INTF	IOCIF	0000 000x	0000 000u
08Ch	TRISA	—	—	TRISA5	TRISA4	TRISA3	TRISA2	TRISA1	TRISA0	--11 1111	--11 1111
08Dh	TRISB(2)	TRISB7	TRISB6	TRISB5	TRISB4	—	—	—	—	1111 ----	1111 ----
08Eh	TRISC	TRISC7(2)	TRISC6(2)	TRISC5	TRISC4	TRISC3	TRISC2	TRISC1	TRISC0	1111 1111	1111 1111
08Fh	—	Unimplemented								—	—
090h	—	Unimplemented								—	—
091h	PIE1	TMR1GIE	ADIE	RCIE	TXIE	SSP1IE	CCP1IE	TMR2IE	TMR1IE	0000 0000	0000 0000
092h	PIE2	OSFIE	C2IE	C1IE	EEIE	BCL1IE	—	—	CCP2IE	0000 0--0	0000 0--0
093h	PIE3	—	—	CCP4IE	CCP3IE	TMR6IE	—	TMR4IE	—	--00 0-0-	--00 0-0-
094h	—	Unimplemented								—	—
095h	OPTION_REG	WPUEN	INTEDG	TMR0CS	TMR0SE	PSA	PS<2:0>			1111 1111	1111 1111
096h	PCON	STKOVF	STKUNF	—	—	RMCLR	RI	POR	BOR	00-- 11qq	qq-- qquu
097h	WDTCON	—	—	WDTPS<4:0>					SWDTEN	--01 0110	--01 0110
098h	OSCTUNE	—	—	TUN<5:0>						--00 0000	--00 0000
099h	OSCCON	SPLLEN	IRCF<3:0>				—	SCS<1:0>		0011 1-00	0011 1-00
09Ah	OSCSTAT	T1OSCR	PLLR	OSTS	HFIOFR	HFIOFL	MFIOFR	LFIOFR	HFIOFS	10q0 0q00	qqqq qq0q
09Bh	ADRESL	A/D Result Register Low								xxxx xxxx	uuuu uuuu
09Ch	ADRESH	A/D Result Register High								xxxx xxxx	uuuu uuuu
09Dh	ADCON0	—	CHS<4:0>					GO/DONE	ADON	-000 0000	-000 0000
09Eh	ADCON1	ADFM	ADCS<2:0>			—	ADNREF	ADPREF<1:0>		0000 -000	0000 -000
09Fh	—	Unimplemented								—	—

Legend: x = unknown, u = unchanged, q = value depends on condition, - = unimplemented, r = reserved. Shaded locations are unimplemented, read as '0'.

Note 1: These registers can be addressed from any bank.
2: PIC16(L)F1828 only.
3: PIC16(L)F1824 only.
4: Unimplemented, read as '1'.

© 2010-2015 Microchip Technology Inc.

TABLE 3-9: SPECIAL FUNCTION REGISTER SUMMARY (CONTINUED)

Address	Name	Bit 7	Bit 6	Bit 5	Bit 4	Bit 3	Bit 2	Bit 1	Bit 0	Value on POR, BOR	Value on all other Resets
Bank 2											
100h(1)	INDF0	Addressing this location uses contents of FSR0H/FSR0L to address data memory (not a physical register)								xxxx xxxx	xxxx xxxx
101h(1)	INDF1	Addressing this location uses contents of FSR1H/FSR1L to address data memory (not a physical register)								xxxx xxxx	xxxx xxxx
102h(1)	PCL	Program Counter (PC) Least Significant Byte								0000 0000	0000 0000
103h(1)	STATUS	—	—	—	$\overline{TO}$	$\overline{PD}$	Z	DC	C	---1 1000	---q quuu
104h(1)	FSR0L	Indirect Data Memory Address 0 Low Pointer								0000 0000	uuuu uuuu
105h(1)	FSR0H	Indirect Data Memory Address 0 High Pointer								0000 0000	0000 0000
106h(1)	FSR1L	Indirect Data Memory Address 1 Low Pointer								0000 0000	uuuu uuuu
107h(1)	FSR1H	Indirect Data Memory Address 1 High Pointer								0000 0000	0000 0000
108h(1)	BSR	—	—	—	BSR<4:0>					---0 0000	---0 0000
109h(1)	WREG	Working Register								0000 0000	uuuu uuuu
10Ah(1)	PCLATH	—	Write Buffer for the upper 7 bits of the Program Counter							-000 0000	-000 0000
10Bh(1)	INTCON	GIE	PEIE	TMR0IE	INTE	IOCIE	TMR0IF	INTF	IOCIF	0000 000x	0000 000u
10Ch	LATA	—	—	LATA5	LATA4	—	LATA2	LATA1	LATA0	--xx -xxx	--uu -uuu
10Dh	LATB(2)	LATB7	LATB6	LATB5	LATB4	—	—	—	—	xxxx ----	xxxx ----
10Eh	LATC	LATC7(2)	LATC6(2)	LATC5	LATC4	LATC3	LATC2	LATC1	LATC0	xxxx xxxx	uuuu uuuu
10Fh	—	Unimplemented								—	—
110h	—	Unimplemented								—	—
111h	CM1CON0	C1ON	C1OUT	C1OE	C1POL	—	C1SP	C1HYS	C1SYNC	0000 -100	0000 -100
112h	CM1CON1	C1INTP	C1INTN	C1PCH<1:0>		—	—	C1NCH1	C1NCH0	0000 ---0	0000 ---0
113h	CM2CON0	C2ON	C2OUT	C2OE	C2POL	—	C2SP	C2HYS	C2SYNC	0000 -100	0000 -100
114h	CM2CON1	C2INTP	C2INTN	C2PCH<1:0>		—	—	C2NCH<1:0>		0000 --00	0000 --00
115h	CMOUT	—	—	—	—	—	—	MC2OUT	MC1OUT	---- --00	---- --00
116h	BORCON	SBOREN	—	—	—	—	—	—	BORRDY	1--- ---q	u--- ---u
117h	FVRCON	FVREN	FVRRDY	TSEN	TSRNG	CDAFVR<1:0>		ADFVR<1:0>		0q00 0000	0q00 0000
118h	DACCON0	DACEN	DACLPS	DACOE	—	DACPSS<1:0>		—	DACNSS	000- 00-0	000- 00-0
119h	DACCON1	—	—	—	DACR<4:0>					---0 0000	---0 0000
11Ah	SRCON0	SRLEN	SRCLK<2:0>			SRQEN	SRNQEN	SRPS	SRPR	0000 0000	0000 0000
11Bh	SRCON1	SRSPE	SRSCKE	SRSC2E	SRSC1E	SRRPE	SRRCKE	SRRC2E	SRRC1E	0000 0000	0000 0000
11Ch	—	Unimplemented								—	—
11Dh	APFCON0	RXDTSEL	SDOSEL(3)	SSSEL(3)	—	T1GSEL	TXCKSEL	—	—	000- 0000	000- 0000
11Eh	APFCON1	—	—	—	—	P1DSEL	P1CSEL	P2BSEL	CCP2SEL	--00 0000	--00 0000
11Fh	—	Unimplemented								—	—

Legend: x = unknown, u = unchanged, q = value depends on condition, - = unimplemented, r = reserved.
Shaded locations are unimplemented, read as '0'.

Note 1: These registers can be addressed from any bank.
2: PIC16(L)F1828 only.
3: PIC16(L)F1824 only.
4: Unimplemented, read as '1'.

TABLE 3-9: SPECIAL FUNCTION REGISTER SUMMARY (CONTINUED)

Address	Name	Bit 7	Bit 6	Bit 5	Bit 4	Bit 3	Bit 2	Bit 1	Bit 0	Value on POR, BOR	Value on all other Resets
Bank 3											
180h(1)	INDF0	Addressing this location uses contents of FSR0H/FSR0L to address data memory (not a physical register)								xxxx xxxx	xxxx xxxx
181h(1)	INDF1	Addressing this location uses contents of FSR1H/FSR1L to address data memory (not a physical register)								xxxx xxxx	xxxx xxxx
182h(1)	PCL	Program Counter (PC) Least Significant Byte								0000 0000	0000 0000
183h(1)	STATUS	—	—	—	$\overline{TO}$	$\overline{PD}$	Z	DC	C	---1 1000	---q quuu
184h(1)	FSR0L	Indirect Data Memory Address 0 Low Pointer								0000 0000	uuuu uuuu
185h(1)	FSR0H	Indirect Data Memory Address 0 High Pointer								0000 0000	0000 0000
186h(1)	FSR1L	Indirect Data Memory Address 1 Low Pointer								0000 0000	uuuu uuuu
187h(1)	FSR1H	Indirect Data Memory Address 1 High Pointer								0000 0000	0000 0000
188h(1)	BSR	—	—	—	BSR<4:0>					---0 0000	---0 0000
189h(1)	WREG	Working Register								0000 0000	uuuu uuuu
18Ah(1)	PCLATH	—	Write Buffer for the upper 7 bits of the Program Counter							-000 0000	-000 0000
18Bh(1)	INTCON	GIE	PEIE	TMR0IE	INTE	IOCIE	TMR0IF	INTF	IOCIF	0000 000x	0000 000u
18Ch	ANSELA	—	—	—	ANSA4	—	ANSA2	ANSA1	ANSA0	---1 -111	---1 -111
18Dh	ANSELB(2)	—	—	ANSB5	ANSB4	—	—	—	—	--11 ----	--11 ----
18Eh	ANSELC	ANSC7(2)	ANSC6(2)	—	—	ANSC3	ANSC2	ANSC1	ANSC0	11-- 1111	11-- 1111
18Fh	—	Unimplemented								—	—
190h	—	Unimplemented								—	—
191h	EEADRL	EEPROM/Program Memory Address Register Low Byte								0000 0000	0000 0000
192h	EEADRH	—(4)	EEPROM/Program Memory Address Register High Byte							1000 0000	1000 0000
193h	EEDATL	EEPROM / Program Memory Read Data Register Low Byte								xxxx xxxx	uuuu uuuu
194h	EEDATH	—	—	EEPROM / Program Memory Read Data Register High Byte						--xx xxxx	--uu uuuu
195h	EECON1	EEPGD	CFGS	LWLO	FREE	WRERR	WREN	WR	RD	0000 x000	0000 q000
196h	EECON2	EEPROM control register 2								0000 0000	0000 0000
197h	—	Unimplemented								—	—
198h	—	Unimplemented								—	—
199h	RCREG	USART Receive Data Register								0000 0000	0000 0000
19Ah	TXREG	USART Transmit Data Register								0000 0000	0000 0000
19Bh	SPBRGL	Baud Rate Generator Data Register Low								0000 0000	0000 0000
19Ch	SPBRGH	Baud Rate Generator Data Register High								0000 0000	0000 0000
19Dh	RCSTA	SPEN	RX9	SREN	CREN	ADDEN	FERR	OERR	RX9D	0000 000x	0000 000x
19Eh	TXSTA	CSRC	TX9	TXEN	SYNC	SENDB	BRGH	TRMT	TX9D	0000 0010	0000 0010
19Fh	BAUDCON	ABDOVF	RCIDL	—	SCKP	BRG16	—	WUE	ABDEN	01-0 0-00	01-0 0-00

Legend: x = unknown, u = unchanged, q = value depends on condition, - = unimplemented, r = reserved.
Shaded locations are unimplemented, read as '0'.

Note 1: These registers can be addressed from any bank.
2: PIC16(L)F1828 only.
3: PIC16(L)F1824 only.
4: Unimplemented, read as '1'.

© 2010-2015 Microchip Technology Inc.

TABLE 3-9: SPECIAL FUNCTION REGISTER SUMMARY (CONTINUED)

Address	Name	Bit 7	Bit 6	Bit 5	Bit 4	Bit 3	Bit 2	Bit 1	Bit 0	Value on POR, BOR	Value on all other Resets
Bank 4											
200h(1)	INDF0	Addressing this location uses contents of FSR0H/FSR0L to address data memory (not a physical register)								xxxx xxxx	xxxx xxxx
201h(1)	INDF1	Addressing this location uses contents of FSR1H/FSR1L to address data memory (not a physical register)								xxxx xxxx	xxxx xxxx
202h(1)	PCL	Program Counter (PC) Least Significant Byte								0000 0000	0000 0000
203h(1)	STATUS	—	—	—	$\overline{TO}$	$\overline{PD}$	Z	DC	C	---1 1000	---q quuu
204h(1)	FSR0L	Indirect Data Memory Address 0 Low Pointer								0000 0000	uuuu uuuu
205h(1)	FSR0H	Indirect Data Memory Address 0 High Pointer								0000 0000	0000 0000
206h(1)	FSR1L	Indirect Data Memory Address 1 Low Pointer								0000 0000	uuuu uuuu
207h(1)	FSR1H	Indirect Data Memory Address 1 High Pointer								0000 0000	0000 0000
208h(1)	BSR	—	—	—	BSR<4:0>					---0 0000	---0 0000
209h(1)	WREG	Working Register								0000 0000	uuuu uuuu
20Ah(1)	PCLATH	—	Write Buffer for the upper 7 bits of the Program Counter							-000 0000	-000 0000
20Bh(1)	INTCON	GIE	PEIE	TMR0IE	INTE	IOCIE	TMR0IF	INTF	IOCIF	0000 000x	0000 000u
20Ch	WPUA	—	—	WPUA5	WPUA4	WPUA3	WPUA2	WPUA1	WPUA0	--11 1111	--11 1111
20Dh	WPUB(2)	WPUB7	WPUB6	WPUB5	WPUB4	—	—	—	—	1111 ----	1111 ----
20Eh	WPUC	WPUC7(2)	WPUC6(2)	WPUC5	WPUC4	WPUC3	WPUC2	WPUC1	WPUC0	1111 1111	1111 1111
20Fh	—	Unimplemented								—	—
210h	—	Unimplemented								—	—
211h	SSP1BUF	Synchronous Serial Port Receive Buffer/Transmit Register								xxxx xxxx	uuuu uuuu
212h	SSP1ADD	ADD<7:0>								0000 0000	0000 0000
213h	SSP1MSK	MSK<7:0>								1111 1111	1111 1111
214h	SSP1STAT	SMP	CKE	D/$\overline{A}$	P	S	R/$\overline{W}$	UA	BF	0000 0000	0000 0000
215h	SSP1CON1	WCOL	SSPOV	SSPEN	CKP	SSPM<3:0>				0000 0000	0000 0000
216h	SSP1CON2	GCEN	ACKSTAT	ACKDT	ACKEN	RCEN	PEN	RSEN	SEN	0000 0000	0000 0000
217h	SSP1CON3	ACKTIM	PCIE	SCIE	BOEN	SDAHT	SBCDE	AHEN	DHEN	0000 0000	0000 0000
218h	—	Unimplemented								—	—
219h	—	Unimplemented								—	—
21Ah	—	Unimplemented								—	—
21Bh	—	Unimplemented								—	—
21Ch	—	Unimplemented								—	—
21Dh	—	Unimplemented								—	—
21Eh	—	Unimplemented								—	—
21Fh	—	Unimplemented								—	—

Legend: x = unknown, u = unchanged, q = value depends on condition, - = unimplemented, r = reserved.
Shaded locations are unimplemented, read as '0'.

Note 1: These registers can be addressed from any bank.
2: PIC16(L)F1828 only.
3: PIC16(L)F1824 only.
4: Unimplemented, read as '1'.

TABLE 3-9: SPECIAL FUNCTION REGISTER SUMMARY (CONTINUED)

Address	Name	Bit 7	Bit 6	Bit 5	Bit 4	Bit 3	Bit 2	Bit 1	Bit 0	Value on POR, BOR	Value on all other Resets
Bank 5											
280h(1)	INDF0	Addressing this location uses contents of FSR0H/FSR0L to address data memory (not a physical register)								xxxx xxxx	xxxx xxxx
281h(1)	INDF1	Addressing this location uses contents of FSR1H/FSR1L to address data memory (not a physical register)								xxxx xxxx	xxxx xxxx
282h(1)	PCL	Program Counter (PC) Least Significant Byte								0000 0000	0000 0000
283h(1)	STATUS	—	—	—	$\overline{TO}$	$\overline{PD}$	Z	DC	C	---1 1000	---q quuu
284h(1)	FSR0L	Indirect Data Memory Address 0 Low Pointer								0000 0000	uuuu uuuu
285h(1)	FSR0H	Indirect Data Memory Address 0 High Pointer								0000 0000	0000 0000
286h(1)	FSR1L	Indirect Data Memory Address 1 Low Pointer								0000 0000	uuuu uuuu
287h(1)	FSR1H	Indirect Data Memory Address 1 High Pointer								0000 0000	0000 0000
288h(1)	BSR	—	—	—	BSR<4:0>					---0 0000	---0 0000
289h(1)	WREG	Working Register								0000 0000	uuuu uuuu
28Ah(1)	PCLATH	—	Write Buffer for the upper 7 bits of the Program Counter							-000 0000	-000 0000
28Bh(1)	INTCON	GIE	PEIE	TMR0IE	INTE	IOCIE	TMR0IF	INTF	IOCIF	0000 000x	0000 000u
28Ch	—	Unimplemented								—	—
28Dh	—	Unimplemented								—	—
28Eh	—	Unimplemented								—	—
28Fh	—	Unimplemented								—	—
290h	—	Unimplemented								—	—
291h	CCPR1L	Capture/Compare/PWM Register 1 (LSB)								xxxx xxxx	uuuu uuuu
292h	CCPR1H	Capture/Compare/PWM Register 1 (MSB)								xxxx xxxx	uuuu uuuu
293h	CCP1CON	P1M<1:0>		DC1B<1:0>		CCP1M<3:0>				0000 0000	0000 0000
294h	PWM1CON	P1RSEN	P1DC<6:0>							0000 0000	0000 0000
295h	CCP1AS	CCP1ASE	CCP1AS<2:0>			PSS1AC<1:0>		PSS1BD<1:0>		0000 0000	0000 0000
296h	PSTR1CON	—	—	—	STR1SYNC	STR1D	STR1C	STR1B	STR1A	---0 0001	---0 0001
297h	—	Unimplemented								—	—
298h	CCPR2L	Capture/Compare/PWM Register 2 (LSB)								xxxx xxxx	uuuu uuuu
299h	CCPR2H	Capture/Compare/PWM Register 2 (MSB)								xxxx xxxx	uuuu uuuu
29Ah	CCP2CON	P2M<1:0>		DC2B<1:0>		CCP2M<3:0>				0000 0000	0000 0000
29Bh	PWM2CON	P2RSEN	P2DC<6:0>							0000 0000	0000 0000
29Ch	CCP2AS	CCP2ASE	CCP2AS<2:0>			PSS2AC<1:0>		PSS2BD<1:0>		0000 0000	0000 0000
29Dh	PSTR2CON	—	—	—	STR2SYNC	STR2D	STR2C	STR2B	STR2A	---0 0001	---0 0001
29Eh	CCPTMRS0	C4TSEL<1:0>		C3TSEL<1:0>		C2TSEL<1:0>		C1TSEL<1:0>		0000 0000	0000 0000
29Fh	—	Unimplemented								—	—

Legend: x = unknown, u = unchanged, q = value depends on condition, - = unimplemented, r = reserved. Shaded locations are unimplemented, read as '0'.

Note 1: These registers can be addressed from any bank.
2: PIC16(L)F1828 only.
3: PIC16(L)F1824 only.
4: Unimplemented, read as '1'.

© 2010-2015 Microchip Technology Inc.

TABLE 3-9: SPECIAL FUNCTION REGISTER SUMMARY (CONTINUED)

Address	Name	Bit 7	Bit 6	Bit 5	Bit 4	Bit 3	Bit 2	Bit 1	Bit 0	Value on POR, BOR	Value on all other Resets
Bank 6											
300h(1)	INDF0	Addressing this location uses contents of FSR0H/FSR0L to address data memory (not a physical register)								xxxx xxxx	xxxx xxxx
301h(1)	INDF1	Addressing this location uses contents of FSR1H/FSR1L to address data memory (not a physical register)								xxxx xxxx	xxxx xxxx
302h(1)	PCL	Program Counter (PC) Least Significant Byte								0000 0000	0000 0000
303h(1)	STATUS	—	—	—	$\overline{TO}$	$\overline{PD}$	Z	DC	C	---1 1000	---q quuu
304h(1)	FSR0L	Indirect Data Memory Address 0 Low Pointer								0000 0000	uuuu uuuu
305h(1)	FSR0H	Indirect Data Memory Address 0 High Pointer								0000 0000	0000 0000
306h(1)	FSR1L	Indirect Data Memory Address 1 Low Pointer								0000 0000	uuuu uuuu
307h(1)	FSR1H	Indirect Data Memory Address 1 High Pointer								0000 0000	0000 0000
308h(1)	BSR	—	—	—	BSR<4:0>					---0 0000	---0 0000
309h(1)	WREG	Working Register								0000 0000	uuuu uuuu
30Ah(1)	PCLATH	—	Write Buffer for the upper 7 bits of the Program Counter							-000 0000	-000 0000
30Bh(1)	INTCON	GIE	PEIE	TMR0IE	INTE	IOCIE	TMR0IF	INTF	IOCIF	0000 000x	0000 000u
30Ch	—	Unimplemented								—	—
30Dh	—	Unimplemented								—	—
30Eh	—	Unimplemented								—	—
30Fh	—	Unimplemented								—	—
310h	—	Unimplemented								—	—
311h	CCPR3L	Capture/Compare/PWM Register 3 (LSB)								xxxx xxxx	uuuu uuuu
312h	CCPR3H	Capture/Compare/PWM Register 3 (MSB)								xxxx xxxx	uuuu uuuu
313h	CCP3CON	—	—	DC3B<1:0>		CCP3M<3:0>				--00 0000	--00 0000
314h	—	Unimplemented								—	—
315h	—	Unimplemented								—	—
316h	—	Unimplemented								—	—
317h	—	Unimplemented								—	—
318h	CCPR4L	Capture/Compare/PWM Register 4 (LSB)								xxxx xxxx	uuuu uuuu
319h	CCPR4H	Capture/Compare/PWM Register 4 (MSB)								xxxx xxxx	uuuu uuuu
31Ah	CCP4CON	—	—	DC4B<1:0>		CCP4M<3:0>				--00 0000	--00 0000
31Bh	—	Unimplemented								—	—
31Ch	—	Unimplemented								—	—
31Dh	—	Unimplemented								—	—
31Eh	—	Unimplemented								—	—
31Fh	—	Unimplemented								—	—

Legend: x = unknown, u = unchanged, q = value depends on condition, - = unimplemented, r = reserved.
Shaded locations are unimplemented, read as '0'.

Note 1: These registers can be addressed from any bank.
2: PIC16(L)F1828 only.
3: PIC16(L)F1824 only.
4: Unimplemented, read as '1'.

TABLE 3-9: SPECIAL FUNCTION REGISTER SUMMARY (CONTINUED)

Address	Name	Bit 7	Bit 6	Bit 5	Bit 4	Bit 3	Bit 2	Bit 1	Bit 0	Value on POR, BOR	Value on all other Resets
Bank 7											
380h(1)	INDF0	Addressing this location uses contents of FSR0H/FSR0L to address data memory (not a physical register)								xxxx xxxx	xxxx xxxx
381h(1)	INDF1	Addressing this location uses contents of FSR1H/FSR1L to address data memory (not a physical register)								xxxx xxxx	xxxx xxxx
382h(1)	PCL	Program Counter (PC) Least Significant Byte								0000 0000	0000 0000
383h(1)	STATUS	—	—	—	$\overline{TO}$	$\overline{PD}$	Z	DC	C	---1 1000	---q quuu
384h(1)	FSR0L	Indirect Data Memory Address 0 Low Pointer								0000 0000	uuuu uuuu
385h(1)	FSR0H	Indirect Data Memory Address 0 High Pointer								0000 0000	0000 0000
386h(1)	FSR1L	Indirect Data Memory Address 1 Low Pointer								0000 0000	uuuu uuuu
387h(1)	FSR1H	Indirect Data Memory Address 1 High Pointer								0000 0000	0000 0000
388h(1)	BSR	—	—	—	BSR<4:0>					---0 0000	---0 0000
389h(1)	WREG	Working Register								0000 0000	uuuu uuuu
38Ah(1)	PCLATH	—	Write Buffer for the upper 7 bits of the Program Counter							-000 0000	-000 0000
38Bh(1)	INTCON	GIE	PEIE	TMR0IE	INTE	IOCIE	TMR0IF	INTF	IOCIF	0000 000x	0000 000u
38Ch	INLVLA	—	—	INLVLA5	INLVLA4	INLVLA3	INLVLA2	INLVLA1	INLVLA0	--00 0100	--00 0100
38Dh	INLVLB(2)	INLVLB7	INLVLB6	INLVLB5	INLVLB4	—	—	—	—	0000 ----	0000 ----
38Eh	INLVLC(3)	—	—	INLVLC5	INLVLC4	INLVLC3	INLVLC2	INLVLC1	INLVLC0	--00 0000	--00 0000
	INLVLC(2)	INLVLC7	INLVLC6	INLVLC5	INLVLC4	INLVLC3	INLVLC2	INLVLC1	INLVLC0	1111 1111	1111 1111
38Fh	—	Unimplemented								—	—
390h	—	Unimplemented								—	—
391h	IOCAP	—	—	IOCAP5	IOCAP4	IOCAP3	IOCAP2	IOCAP1	IOCAP0	--00 0000	--00 0000
392h	IOCAN	—	—	IOCAN5	IOCAN4	IOCAN3	IOCAN2	IOCAN1	IOCAN0	--00 0000	--00 0000
393h	IOCAF	—	—	IOCAF5	IOCAF4	IOCAF3	IOCAF2	IOCAF1	IOCAF0	--00 0000	--00 0000
394h	IOCBP(2)	IOCBP7	IOCBP6	IOCBP5	IOCBP4	—	—	—	—	0000 ----	0000 ----
395h	IOCBN(2)	IOCBN7	IOCBN6	IOCBN5	IOCBN4	—	—	—	—	0000 ----	0000 ----
396h	IOCBF(2)	IOCBF7	IOCBF6	IOCBF5	IOCBF4	—	—	—	—	0000 ----	0000 ----
397h	—	Unimplemented								—	—
398h	—	Unimplemented								—	—
399h	—	Unimplemented								—	—
39Ah	CLKRCON	CLKREN	CLKROE	CLKRSLR	CLKRDC<1:0>		CLKRDIV<2:0>			0011 0000	0011 0000
39Bh	—	Unimplemented								—	—
39Ch	MDCON	MDEN	MDOE	MDSLR	MDOPOL	MDOUT	—	—	MDBIT	0010 ---0	0010 ---0
39Dh	MDSRC	MDMSODIS	—	—	—	MDMS<3:0>				x--- xxxx	u--- uuuu
39Eh	MDCARL	MDCLODIS	MDCLPOL	MDCLSYNC	—	MDCL<3:0>				xxx- xxxx	uuu- uuuu
39Fh	MDCARH	MDCHODIS	MDCHPOL	MDCHSYNC	—	MDCH<3:0>				xxx- xxxx	uuu- uuuu

Legend: x = unknown, u = unchanged, q = value depends on condition, - = unimplemented, r = reserved.
Shaded locations are unimplemented, read as '0'.

Note 1: These registers can be addressed from any bank.
2: PIC16(L)F1828 only.
3: PIC16(L)F1824 only.
4: Unimplemented, read as '1'.

© 2010-2015 Microchip Technology Inc.

TABLE 3-9: SPECIAL FUNCTION REGISTER SUMMARY (CONTINUED)

Address	Name	Bit 7	Bit 6	Bit 5	Bit 4	Bit 3	Bit 2	Bit 1	Bit 0	Value on POR, BOR	Value on all other Resets
Bank 8											
400h(1)	INDF0	Addressing this location uses contents of FSR0H/FSR0L to address data memory (not a physical register)								xxxx xxxx	xxxx xxxx
401h(1)	INDF1	Addressing this location uses contents of FSR1H/FSR1L to address data memory (not a physical register)								xxxx xxxx	xxxx xxxx
402h(1)	PCL	Program Counter (PC) Least Significant Byte								0000 0000	0000 0000
403h(1)	STATUS	—	—	—	$\overline{TO}$	$\overline{PD}$	Z	DC	C	---1 1000	---q quuu
404h(1)	FSR0L	Indirect Data Memory Address 0 Low Pointer								0000 0000	uuuu uuuu
405h(1)	FSR0H	Indirect Data Memory Address 0 High Pointer								0000 0000	0000 0000
406h(1)	FSR1L	Indirect Data Memory Address 1 Low Pointer								0000 0000	uuuu uuuu
407h(1)	FSR1H	Indirect Data Memory Address 1 High Pointer								0000 0000	0000 0000
408h(1)	BSR	—	—	—	BSR<4:0>					---0 0000	---0 0000
409h(1)	WREG	Working Register								0000 0000	uuuu uuuu
40Ah(1)	PCLATH	—	Write Buffer for the upper 7 bits of the Program Counter							-000 0000	-000 0000
40Bh(1)	INTCON	GIE	PEIE	TMR0IE	INTE	IOCIE	TMR0IF	INTF	IOCIF	0000 000x	0000 000u
40Ch	—	Unimplemented								—	—
40Dh	—	Unimplemented								—	—
40Eh	—	Unimplemented								—	—
40Fh	—	Unimplemented								—	—
410h	—	Unimplemented								—	—
411h	—	Unimplemented								—	—
412h	—	Unimplemented								—	—
413h	—	Unimplemented								—	—
414h	—	Unimplemented								—	—
415h	TMR4	Timer4 Module Register								0000 0000	0000 0000
416h	PR4	Timer4 Period Register								1111 1111	1111 1111
417h	T4CON	—	T4OUTPS<3:0>				TMR4ON	T4CKPS<1:0>		-000 0000	-000 0000
418h	—	Unimplemented								—	—
419h	—	Unimplemented								—	—
41Ah	—	Unimplemented								—	—
41Bh	—	Unimplemented								—	—
41Ch	TMR6	Timer6 Module Register								0000 0000	0000 0000
41Dh	PR6	Timer6 Period Register								1111 1111	1111 1111
41Eh	T6CON	—	T6OUTPS<3:0>				TMR6ON	T6CKPS<1:0>		-000 0000	-000 0000
41Fh	—	Unimplemented								—	—

Legend: x = unknown, u = unchanged, q = value depends on condition, - = unimplemented, r = reserved.
Shaded locations are unimplemented, read as '0'.

Note 1: These registers can be addressed from any bank.
2: PIC16(L)F1828 only.
3: PIC16(L)F1824 only.
4: Unimplemented, read as '1'.

TABLE 3-9: SPECIAL FUNCTION REGISTER SUMMARY (CONTINUED)

Address	Name	Bit 7	Bit 6	Bit 5	Bit 4	Bit 3	Bit 2	Bit 1	Bit 0	Value on POR, BOR	Value on all other Resets
Banks 9-30											
x00h/ x80h(1)	INDF0	Addressing this location uses contents of FSR0H/FSR0L to address data memory (not a physical register)								xxxx xxxx	xxxx xxxx
x00h/ x81h(1)	INDF1	Addressing this location uses contents of FSR1H/FSR1L to address data memory (not a physical register)								xxxx xxxx	xxxx xxxx
x02h/ x82h(1)	PCL	Program Counter (PC) Least Significant Byte								0000 0000	0000 0000
x03h/ x83h(1)	STATUS	—	—	—	$\overline{TO}$	$\overline{PD}$	Z	DC	C	---1 1000	---q quuu
x04h/ x84h(1)	FSR0L	Indirect Data Memory Address 0 Low Pointer								0000 0000	uuuu uuuu
x05h/ x85h(1)	FSR0H	Indirect Data Memory Address 0 High Pointer								0000 0000	0000 0000
x06h/ x86h(1)	FSR1L	Indirect Data Memory Address 1 Low Pointer								0000 0000	uuuu uuuu
x07h/ x87h(1)	FSR1H	Indirect Data Memory Address 1 High Pointer								0000 0000	0000 0000
x08h/ x88h(1)	BSR	—	—	—	BSR<4:0>					---0 0000	---0 0000
x09h/ x89h(1)	WREG	Working Register								0000 0000	uuuu uuuu
x0Ah/ x8Ah(1)	PCLATH	—	Write Buffer for the upper 7 bits of the Program Counter							-000 0000	-000 0000
x0Bh/ x8Bh(1)	INTCON	GIE	PEIE	TMR0IE	INTE	IOCIE	TMR0IF	INTF	IOCIF	0000 000x	0000 000u
x0Ch/ x8Ch — x1Fh/ x9Fh	—	Unimplemented								—	—

Legend: x = unknown, u = unchanged, q = value depends on condition, - = unimplemented, r = reserved. Shaded locations are unimplemented, read as '0'.

Note 1: These registers can be addressed from any bank.
2: PIC16(L)F1828 only.
3: PIC16(L)F1824 only.
4: Unimplemented, read as '1'.

© 2010-2015 Microchip Technology Inc.

TABLE 3-9: SPECIAL FUNCTION REGISTER SUMMARY (CONTINUED)

Address	Name	Bit 7	Bit 6	Bit 5	Bit 4	Bit 3	Bit 2	Bit 1	Bit 0	Value on POR, BOR	Value on all other Resets
Bank 31											
F80h(1)	INDF0	Addressing this location uses contents of FSR0H/FSR0L to address data memory (not a physical register)								xxxx xxxx	xxxx xxxx
F81h(1)	INDF1	Addressing this location uses contents of FSR1H/FSR1L to address data memory (not a physical register)								xxxx xxxx	xxxx xxxx
F82h(1)	PCL	Program Counter (PC) Least Significant Byte								0000 0000	0000 0000
F83h(1)	STATUS	—	—	—	$\overline{TO}$	$\overline{PD}$	Z	DC	C	---1 1000	---q quuu
F84h(1)	FSR0L	Indirect Data Memory Address 0 Low Pointer								0000 0000	uuuu uuuu
F85h(1)	FSR0H	Indirect Data Memory Address 0 High Pointer								0000 0000	0000 0000
F86h(1)	FSR1L	Indirect Data Memory Address 1 Low Pointer								0000 0000	uuuu uuuu
F87h(1)	FSR1H	Indirect Data Memory Address 1 High Pointer								0000 0000	0000 0000
F88h(1)	BSR	—	—	—	BSR<4:0>					---0 0000	---0 0000
F89h(1)	WREG	Working Register								0000 0000	uuuu uuuu
F8Ah(1)	PCLATH	—	Write Buffer for the upper 7 bits of the Program Counter							-000 0000	-000 0000
F8Bh(1)	INTCON	GIE	PEIE	TMR0IE	INTE	IOCIE	TMR0IF	INTF	IOCIF	0000 000x	0000 000u
F8Ch — FE3h	—	Unimplemented								—	—
FE4h	STATUS_ SHAD	—	—	—	—	—	Z	DC	C	---- -xxx	---- -uuu
FE5h	WREG_ SHAD	Working Register Shadow								0000 0000	uuuu uuuu
FE6h	BSR_ SHAD	—	—	—	Bank Select Register Shadow					---x xxxx	---u uuuu
FE7h	PCLATH_ SHAD	—	Program Counter Latch High Register Shadow							-xxx xxxx	uuuu uuuu
FE8h	FSR0L_ SHAD	Indirect Data Memory Address 0 Low Pointer Shadow								xxxx xxxx	uuuu uuuu
FE9h	FSR0H_ SHAD	Indirect Data Memory Address 0 High Pointer Shadow								xxxx xxxx	uuuu uuuu
FEAh	FSR1L_ SHAD	Indirect Data Memory Address 1 Low Pointer Shadow								xxxx xxxx	uuuu uuuu
FEBh	FSR1H_ SHAD	Indirect Data Memory Address 1 High Pointer Shadow								xxxx xxxx	uuuu uuuu
FECh	—	Unimplemented								—	—
FEDh	STKPTR	—	—	—	Current Stack pointer					---1 1111	---1 1111
FEEh	TOSL	Top-of-Stack Low byte								xxxx xxxx	uuuu uuuu
FEFh	TOSH	—	Top-of-Stack High byte							-xxx xxxx	-uuu uuuu

Legend: x = unknown, u = unchanged, q = value depends on condition, - = unimplemented, r = reserved.
Shaded locations are unimplemented, read as '0'.

Note 1: These registers can be addressed from any bank.
2: PIC16(L)F1828 only.
3: PIC16(L)F1824 only.
4: Unimplemented, read as '1'.

3.3 PCL and PCLATH

The Program Counter (PC) is 15 bits wide. The low byte comes from the PCL register, which is a readable and writable register. The high byte (PC<14:8>) is not directly readable or writable and comes from PCLATH. On any Reset, the PC is cleared. Figure 3-3 shows the five situations for the loading of the PC.

FIGURE 3-3: LOADING OF PC IN DIFFERENT SITUATIONS

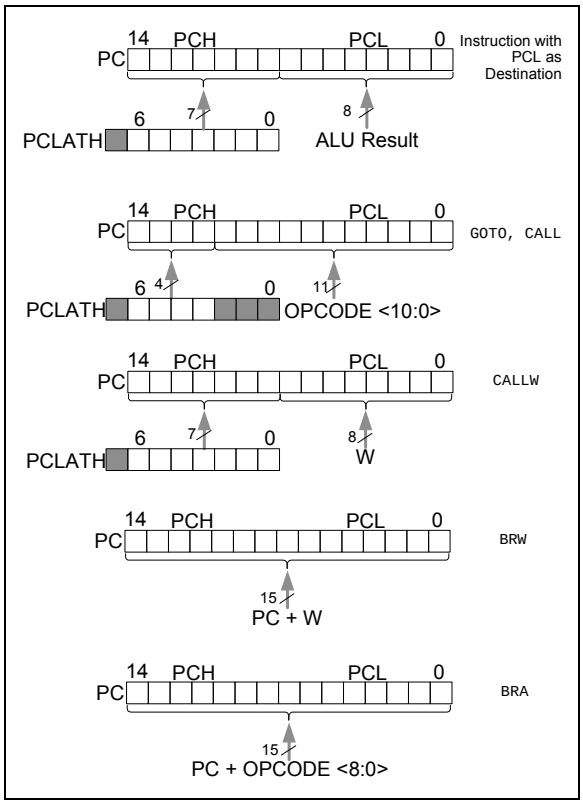

3.3.1 MODIFYING PCL

Executing any instruction with the PCL register as the destination simultaneously causes the Program Counter PC<14:8> bits (PCH) to be replaced by the contents of the PCLATH register. This allows the entire contents of the program counter to be changed by writing the desired upper seven bits to the PCLATH register. When the lower eight bits are written to the PCL register, all 15 bits of the program counter will change to the values contained in the PCLATH register and those being written to the PCL register.

3.3.2 COMPUTED GOTO

A computed GOTO is accomplished by adding an offset to the program counter (ADDWF PCL). When performing a table read using a computed GOTO method, care should be exercised if the table location crosses a PCL memory boundary (each 256-byte block). Refer to Application Note AN556, *"Implementing a Table Read"* (DS00556).

3.3.3 COMPUTED FUNCTION CALLS

A computed function CALL allows programs to maintain tables of functions and provide another way to execute state machines or look-up tables. When performing a table read using a computed function CALL, care should be exercised if the table location crosses a PCL memory boundary (each 256-byte block).

If using the CALL instruction, the PCH<2:0> and PCL registers are loaded with the operand of the CALL instruction. PCH<6:3> is loaded with PCLATH<6:3>.

The CALLW instruction enables computed calls by combining PCLATH and W to form the destination address. A computed CALLW is accomplished by loading the W register with the desired address and executing CALLW. The PCL register is loaded with the value of W and PCH is loaded with PCLATH.

3.3.4 BRANCHING

The branching instructions add an offset to the PC. This allows relocatable code and code that crosses page boundaries. There are two forms of branching, BRW and BRA. The PC will have incremented to fetch the next instruction in both cases. When using either branching instruction, a PCL memory boundary may be crossed.

If using BRW, load the W register with the desired unsigned address and execute BRW. The entire PC will be loaded with the address PC + 1 + W.

If using BRA, the entire PC will be loaded with PC + 1 +, the signed value of the operand of the BRA instruction.

© 2010-2015 Microchip Technology Inc.

3.4 Stack

All devices have a 16-level x 15-bit wide hardware stack (refer to Figures 3-4 through 3-7). The stack space is not part of either program or data space. The PC is PUSHed onto the stack when CALL or CALLW instructions are executed or an interrupt causes a branch. The stack is POPed in the event of a RETURN, RETLW or a RETFIE instruction execution. PCLATH is not affected by a PUSH or POP operation.

The stack operates as a circular buffer if the STVREN bit = 0 (Configuration Word 2). This means that after the stack has been PUSHed sixteen times, the seventeenth PUSH overwrites the value that was stored from the first PUSH. The eighteenth PUSH overwrites the second PUSH (and so on). The STKOVF and STKUNF flag bits will be set on an Overflow/Underflow, regardless of whether the Reset is enabled.

Note 1: There are no instructions/mnemonics called PUSH or POP. These are actions that occur from the execution of the CALL, CALLW, RETURN, RETLW and RETFIE instructions or the vectoring to an interrupt address.

3.4.1 ACCESSING THE STACK

The stack is available through the TOSH, TOSL and STKPTR registers. STKPTR is the current value of the Stack Pointer. TOSH:TOSL register pair points to the TOP of the stack. Both registers are read/writable. TOS is split into TOSH and TOSL due to the 15-bit size of the PC. To access the stack, adjust the value of STKPTR, which will position TOSH:TOSL, then read/write to TOSH:TOSL. STKPTR is five bits to allow detection of overflow and underflow.

Note: Care should be taken when modifying the STKPTR while interrupts are enabled.

During normal program operation, CALL, CALLW and Interrupts will increment STKPTR while RETLW, RETURN, and RETFIE will decrement STKPTR. At any time STKPTR can be inspected to see how much stack is left. The STKPTR always points at the currently used place on the stack. Therefore, a CALL or CALLW will increment the STKPTR and then write the PC, and a return will unload the PC and then decrement STKPTR.

Reference Figure 3-4 through Figure 3-7 for examples of accessing the stack.

FIGURE 3-4: ACCESSING THE STACK EXAMPLE 1

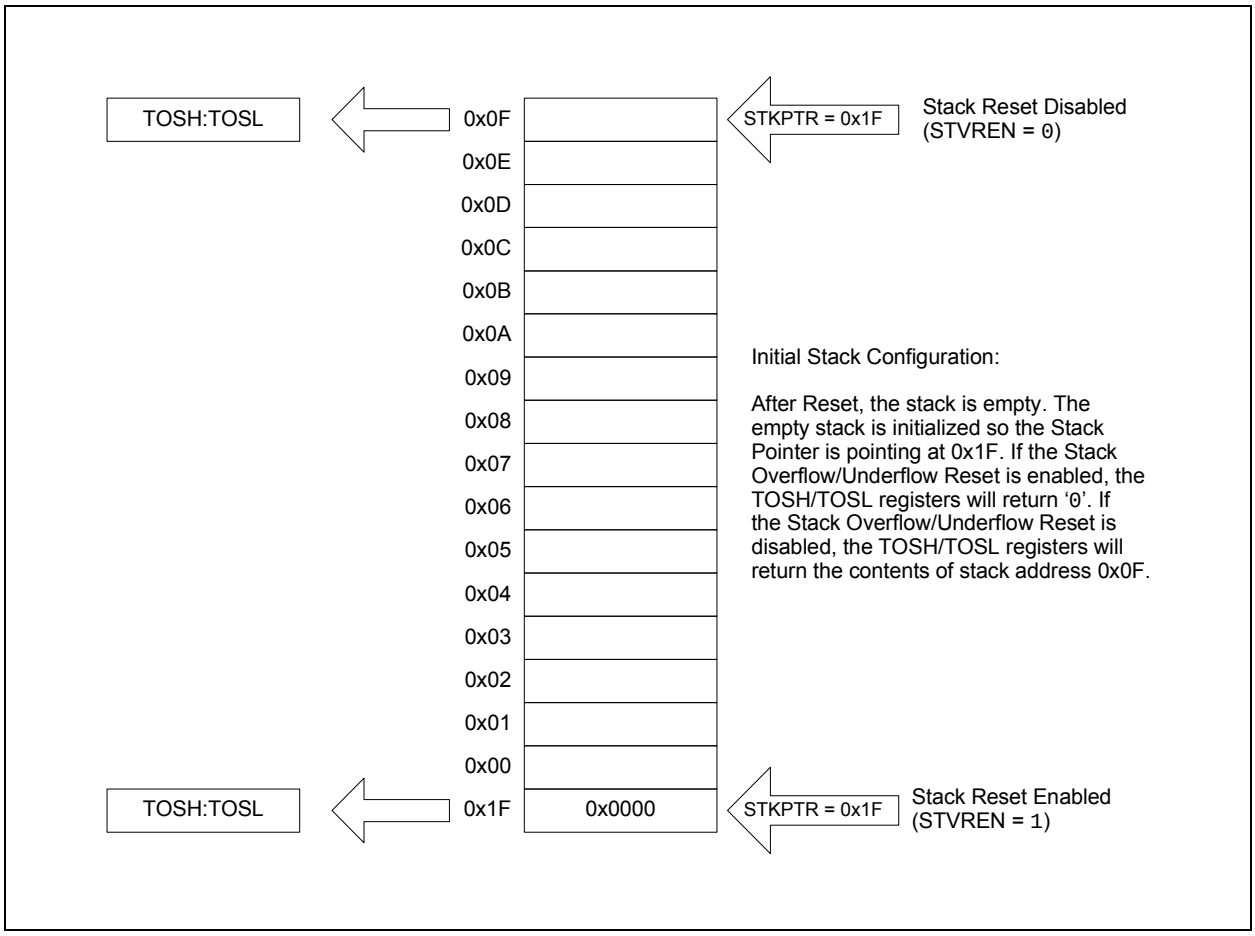

FIGURE 3-5: ACCESSING THE STACK EXAMPLE 2

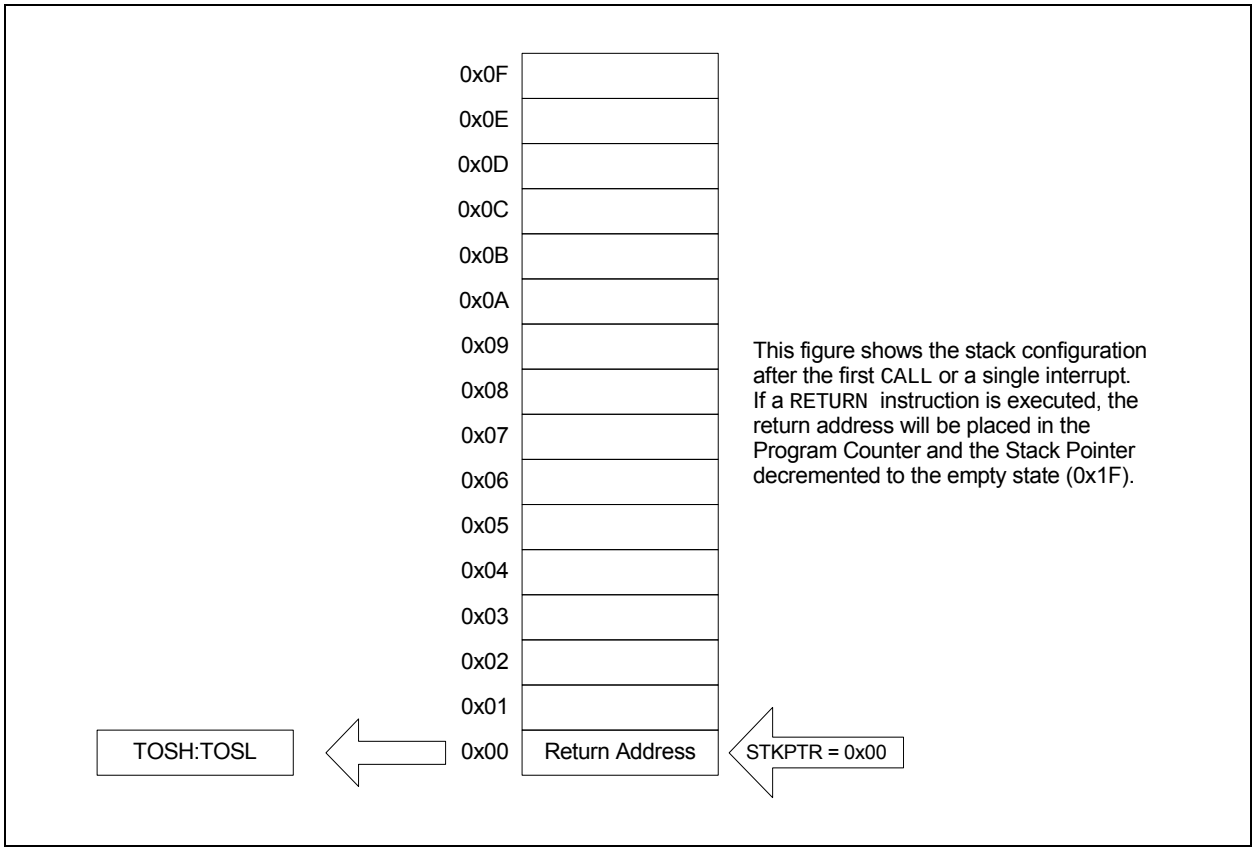

FIGURE 3-6: ACCESSING THE STACK EXAMPLE 3

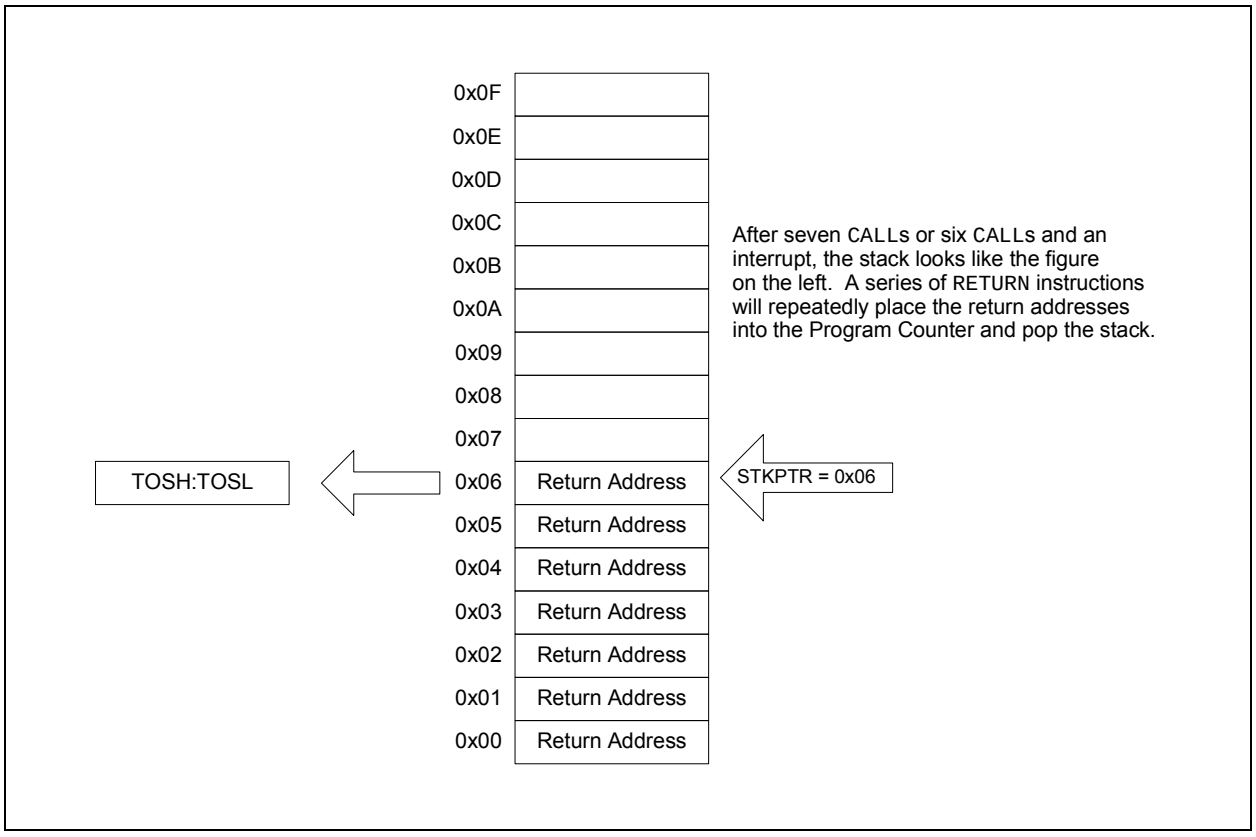

© 2010-2015 Microchip Technology Inc.

FIGURE 3-7: ACCESSING THE STACK EXAMPLE 4

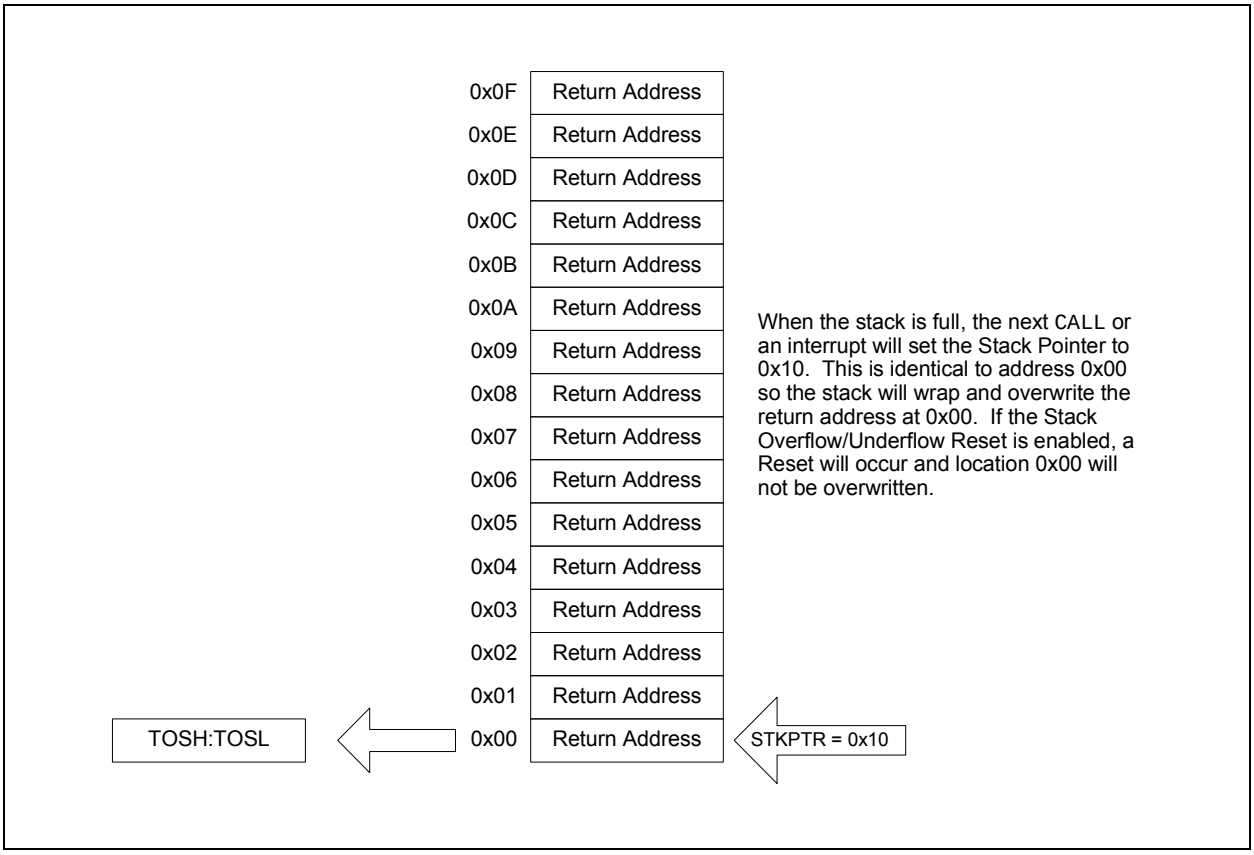

3.4.2 OVERFLOW/UNDERFLOW RESET

If the STVREN bit in Configuration Word 2 is set to '1', the device will be reset if the stack is PUSHed beyond the sixteenth level or POPed beyond the first level, setting the appropriate bits (STKOVF or STKUNF, respectively) in the PCON register.

3.5 Indirect Addressing

The INDFn registers are not physical registers. Any instruction that accesses an INDFn register actually accesses the register at the address specified by the File Select Registers (FSR). If the FSRn address specifies one of the two INDFn registers, the read will return '0' and the write will not occur (though Status bits may be affected). The FSRn register value is created by the pair FSRnH and FSRnL.

The FSR registers form a 16-bit address that allows an addressing space with 65536 locations. These locations are divided into three memory regions:

- Traditional Data Memory
- Linear Data Memory
- Program Flash Memory

FIGURE 3-8: INDIRECT ADDRESSING

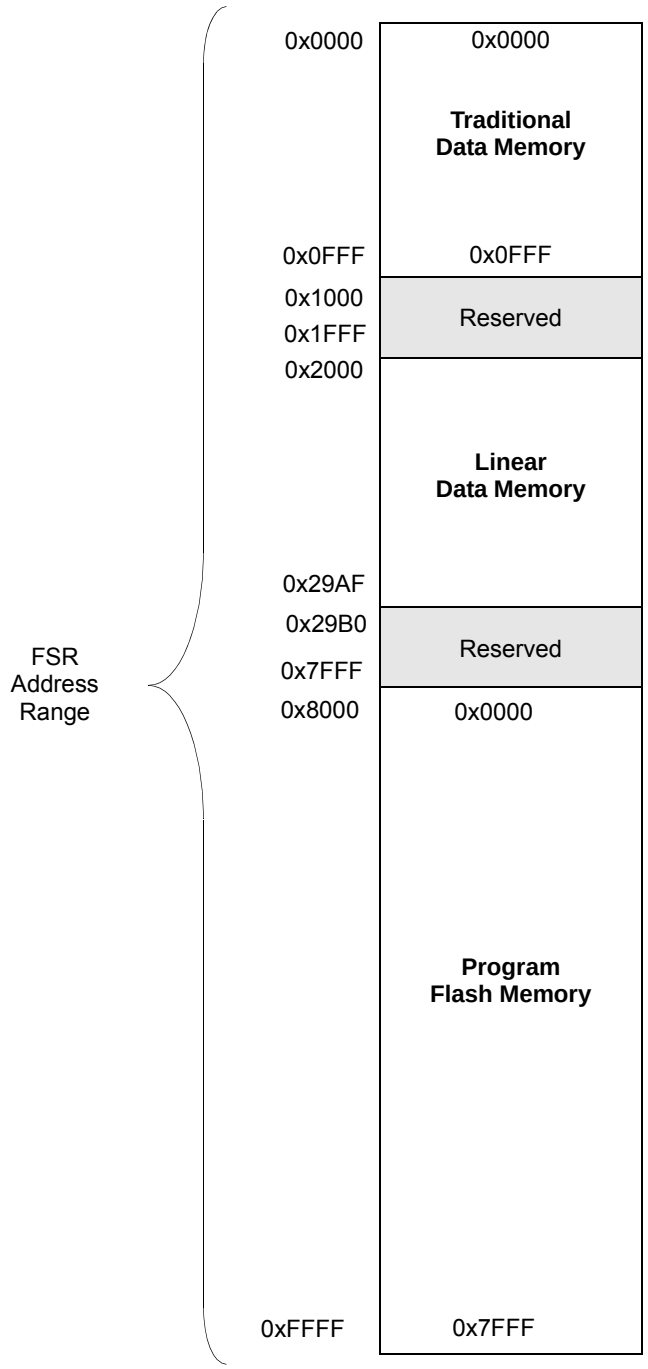

Note: Not all memory regions are completely implemented. Consult device memory tables for memory limits.

© 2010-2015 Microchip Technology Inc.

3.5.1 TRADITIONAL DATA MEMORY

The traditional data memory is a region from FSR address 0x000 to FSR address 0xFFF. The addresses correspond to the absolute addresses of all SFR, GPR and common registers.

FIGURE 3-9: TRADITIONAL DATA MEMORY MAP

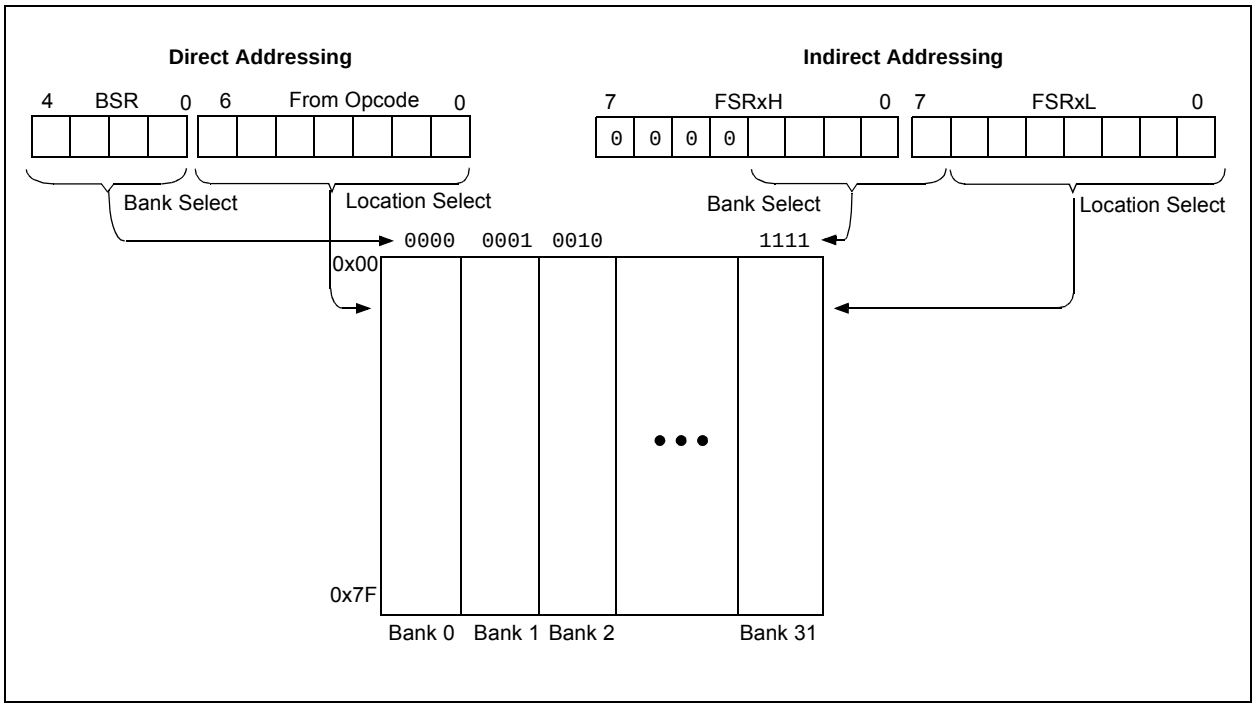

3.5.2 LINEAR DATA MEMORY

The linear data memory is the region from FSR address 0x2000 to FSR address 0x29AF. This region is a virtual region that points back to the 80-byte blocks of GPR memory in all the banks.

Unimplemented memory reads as 0x00. Use of the linear data memory region allows buffers to be larger than 80 bytes because incrementing the FSR beyond one bank will go directly to the GPR memory of the next bank.

The 16 bytes of common memory are not included in the linear data memory region.

FIGURE 3-10: LINEAR DATA MEMORY MAP

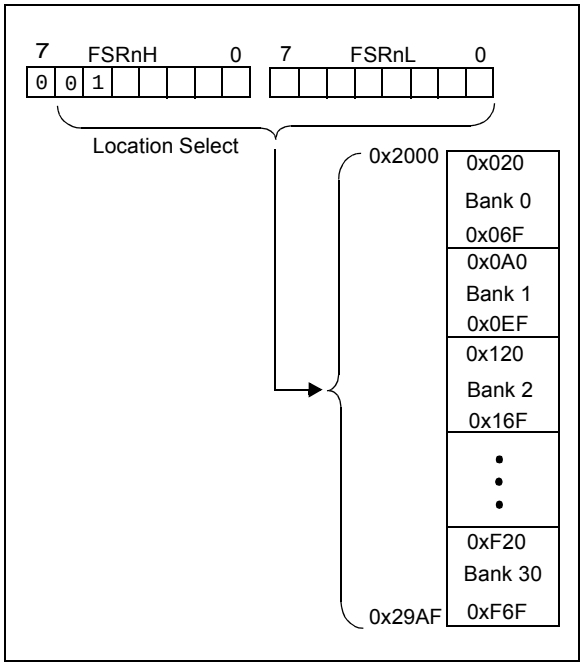

3.5.3 PROGRAM FLASH MEMORY

To make constant data access easier, the entire program Flash memory is mapped to the upper half of the FSR address space. When the MSB of FSRnH is set, the lower 15 bits are the address in program memory which will be accessed through INDF. Only the lower eight bits of each memory location is accessible via INDF. Writing to the program Flash memory cannot be accomplished via the FSR/INDF interface. All instructions that access program Flash memory via the FSR/INDF interface will require one additional instruction cycle to complete.

FIGURE 3-11: PROGRAM FLASH MEMORY MAP

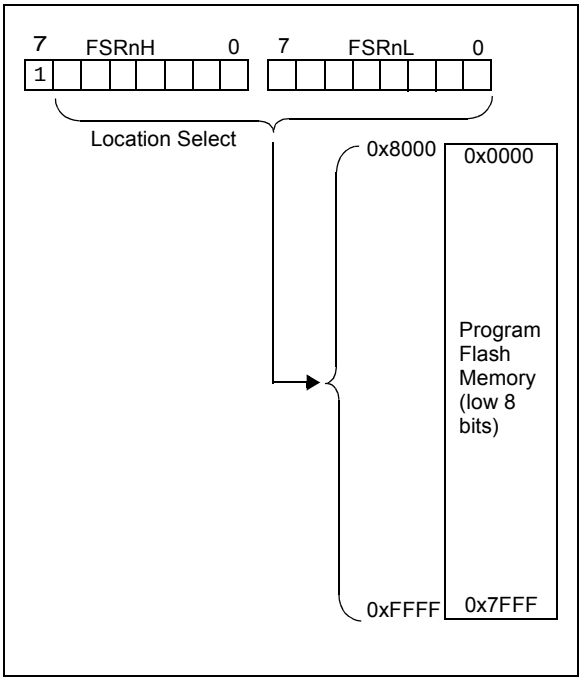

© 2010-2015 Microchip Technology Inc.

4.0 DEVICE CONFIGURATION

Device Configuration consists of Configuration Word 1 and Configuration Word 2, Code Protection and Device ID.

4.1 Configuration Words

There are several Configuration Word bits that allow different oscillator and memory protection options. These are implemented as Configuration Word 1 at 8007h and Configuration Word 2 at 8008h.

Note:	The $\overline{\text{DEBUG}}$ bit in Configuration Word is managed automatically by device development tools including debuggers and programmers. For normal device operation, this bit should be maintained as a '1'.

REGISTER 4-1: CONFIGURATION WORD 1

R/P-1/1	R/P-1/1	R/P-1/1	R/P-1/1	R/P-1/1	R/P-1/1
FCMEN	IESO	$\overline{\text{CLKOUTEN}}$	BOREN<1:0>		$\overline{\text{CPD}}$
bit 13					bit 8

R/P-1/1	R/P-1/1	R/P-1/1	R/P-1/1	R/P-1/1	R/P-1/1	R/P-1/1	R/P-1/1
$\overline{\text{CP}}$	MCLRE	$\overline{\text{PWRTE}}$	WDTE<1:0>		FOSC<2:0>		
bit 7							bit 0

Legend:		
R = Readable bit	P = Programmable bit	U = Unimplemented bit, read as '1'
'0' = Bit is cleared	'1' = Bit is set	-n = Value when blank or after Bulk Erase

bit 13 **FCMEN:** Fail-Safe Clock Monitor Enable bit
1 = Fail-Safe Clock Monitor is enabled
0 = Fail-Safe Clock Monitor is disabled

bit 12 **IESO:** Internal External Switchover bit
1 = Internal/External Switchover mode is enabled
0 = Internal/External Switchover mode is disabled

bit 11 **$\overline{\text{CLKOUTEN}}$:** Clock Out Enable bit
If FOSC Configuration bits are set to LP, XT, HS modes:
This bit is ignored, CLKOUT function is disabled. Oscillator function on the CLKOUT pin.
All other FOSC modes:
1 = CLKOUT function is disabled. I/O function on the CLKOUT pin.
0 = CLKOUT function is enabled on the CLKOUT pin

bit 10-9 **BOREN<1:0>:** Brown-out Reset Enable bits(1)
11 = BOR enabled
10 = BOR enabled during operation and disabled in Sleep
01 = BOR controlled by SBOREN bit of the BORCON register
00 = BOR disabled

bit 8 **$\overline{\text{CPD}}$:** Data Code Protection bit(2)
1 = Data memory code protection is disabled
0 = Data memory code protection is enabled

bit 7 **$\overline{\text{CP}}$:** Code Protection bit(3)
1 = Program memory code protection is disabled
0 = Program memory code protection is enabled

bit 6 **MCLRE:** RA3/$\overline{\text{MCLR}}$/V_{PP} Pin Function Select bit
If LVP bit = 1:
This bit is ignored.
If LVP bit = 0:
1 = $\overline{\text{MCLR}}$/V_{PP} pin function is $\overline{\text{MCLR}}$; Weak pull-up enabled.
0 = $\overline{\text{MCLR}}$/V_{PP} pin function is digital input; $\overline{\text{MCLR}}$ internally disabled; Weak pull-up under control of WPUA register.

bit 5 **$\overline{\text{PWRTE}}$:** Power-up Timer Enable bit(1)
1 = PWRT disabled
0 = PWRT enabled

bit 4-3 **WDTE<1:0>:** Watchdog Timer Enable bit
11 = WDT enabled
10 = WDT enabled while running and disabled in Sleep
01 = WDT controlled by the SWDTEN bit in the WDTCON register
00 = WDT disabled

Note 1: Enabling Brown-out Reset does not automatically enable Power-up Timer.
2: The entire data EEPROM will be erased when the code protection is turned off during an erase.
3: The entire program memory will be erased when the code protection is turned off.

© 2010-2015 Microchip Technology Inc.

REGISTER 4-1: CONFIGURATION WORD 1 (CONTINUED)

bit 2-0 **FOSC<2:0>:** Oscillator Selection bits
- 111 = ECH: External Clock, High-Power mode (4-32 MHz): device clock supplied to CLKIN pin
- 110 = ECM: External Clock, Medium-Power mode (0.5-4 MHz): device clock supplied to CLKIN pin
- 101 = ECL: External Clock, Low-Power mode (0-0.5 MHz): device clock supplied to CLKIN pin
- 100 = INTOSC oscillator: I/O function on CLKIN pin
- 011 = EXTRC oscillator: External RC circuit connected to CLKIN pin
- 010 = HS oscillator: High-speed crystal/resonator connected between OSC1 and OSC2 pins
- 001 = XT oscillator: Crystal/resonator connected between OSC1 and OSC2 pins
- 000 = LP oscillator: Low-power crystal connected between OSC1 and OSC2 pins

Note 1: Enabling Brown-out Reset does not automatically enable Power-up Timer.
2: The entire data EEPROM will be erased when the code protection is turned off during an erase.
3: The entire program memory will be erased when the code protection is turned off.

REGISTER 4-2: CONFIGURATION WORD 2

R/P-1/1	R/P-1/1	U-1	R/P-1/1	R/P-1/1	R/P-1/1
LVP(1)	$\overline{\text{DEBUG}}$(2)	—	BORV	STVREN	PLLEN
bit 13					bit 8

U-1	U-1	U-1	R-1	U-1	U-1	R/P-1/1	R/P-1/1
—	—	—	Reserved	—	—	WRT<1:0>	
bit 7							bit 0

Legend:		
R = Readable bit	P = Programmable bit	U = Unimplemented bit, read as '1'
'0' = Bit is cleared	'1' = Bit is set	-n = Value when blank or after Bulk Erase

Legend:

bit 13 **LVP:** Low-Voltage Programming Enable bit(1)
1 = Low-voltage programming enabled
0 = High-voltage on MCLR must be used for programming

bit 12 **$\overline{\text{DEBUG}}$:** In-Circuit Debugger Mode bit(2)
1 = In-Circuit Debugger disabled, ICSPCLK and ICSPDAT are general purpose I/O pins
0 = In-Circuit Debugger enabled, ICSPCLK and ICSPDAT are dedicated to the debugger

bit 11 **Unimplemented:** Read as '1'

bit 10 **BORV:** Brown-out Reset Voltage Selection bit(3)
1 = Brown-out Reset voltage (Vbor), low trip point selected
0 = Brown-out Reset voltage (Vbor), high trip point selected

bit 9 **STVREN:** Stack Overflow/Underflow Reset Enable bit
1 = Stack Overflow or Underflow will cause a Reset
0 = Stack Overflow or Underflow will not cause a Reset

bit 8 **PLLEN:** PLL Enable bit
1 = 4xPLL enabled
0 = 4xPLL disabled

bit 7-5 **Unimplemented:** Read as '1'

bit 4 **Reserved:** This location should be programmed to a '1'

bit 3-2 **Unimplemented:** Read as '1'

bit 1-0 **WRT<1:0>:** Flash Memory Self-Write Protection bits
11 = Write protection off
10 = 000h to 1FFh write-protected, 200h to FFFh may be modified by EECON control
01 = 000h to 7FFh write-protected, 800h to FFFh may be modified by EECON control
00 = 000h to FFFh write-protected, no addresses may be modified by EECON control

Note 1: The LVP bit cannot be programmed to '0' when Programming mode is entered via LVP.
2: The $\overline{\text{DEBUG}}$ bit in Configuration Word is managed automatically by device development tools including debuggers and programmers. For normal device operation, this bit should be maintained as a '1'.
3: See Vbor parameter for specific trip point voltages.

© 2010-2015 Microchip Technology Inc.

4.2 Code Protection

Code protection allows the device to be protected from unauthorized access. Program memory protection and data EEPROM protection are controlled independently. Internal access to the program memory and data EEPROM are unaffected by any code protection setting.

4.2.1 PROGRAM MEMORY PROTECTION

The entire program memory space is protected from external reads and writes by the $\overline{CP}$ bit in Configuration Word 1. When $\overline{CP}$ = 0, external reads and writes of program memory are inhibited and a read will return all '0's. The CPU can continue to read program memory, regardless of the protection bit settings. Writing the program memory is dependent upon the write protection setting. See **Section 4.3 "Write Protection"** for more information.

4.2.2 DATA EEPROM PROTECTION

The entire data EEPROM is protected from external reads and writes by the $\overline{CPD}$ bit. When $\overline{CPD}$ = 0, external reads and writes of data EEPROM are inhibited. The CPU can continue to read and write data EEPROM regardless of the protection bit settings.

4.3 Write Protection

Write protection allows the device to be protected from unintended self-writes. Applications, such as bootloader software, can be protected while allowing other regions of the program memory to be modified.

The WRT<1:0> bits in Configuration Word 2 define the size of the program memory block that is protected.

4.4 User ID

Four memory locations (8000h-8003h) are designated as ID locations where the user can store checksum or other code identification numbers. These locations are readable and writable during normal execution. See **Section 11.5 "User ID, Device ID and Configuration Word Access"** for more information on accessing these memory locations. For more information on checksum calculation, see the **"***PIC16F/LF182X/PIC12F/LF1822 Memory Programming Specification*" (DS41390).

4.5 Device ID and Revision ID

The memory location 8006h is where the Device ID and Revision ID are stored. The upper nine bits hold the Device ID. The lower five bits hold the Revision ID. See **Section 11.5 "User ID, Device ID and Configuration Word Access"** for more information on accessing these memory locations.

Development tools, such as device programmers and debuggers, may be used to read the Device ID and Revision ID.

REGISTER 4-3: DEVICEID: DEVICE ID REGISTER(1)

R	R	R	R	R	R
DEV<8:3>					
bit 13					bit 8

R	R	R	R	R	R	R	R
DEV<2:0>			REV<4:0>				
bit 7							bit 0

Legend:		
R = Readable bit	'0' = Bit is cleared	'1' = Bit is set

bit 13-5 **DEV<8:0>:** Device ID bits
100111010 = PIC16F1824
100111110 = PIC16F1828
101000010 = PIC16LF1824
101000110 = PIC16LF1828

bit 4-0 **REV<4:0>:** Revision ID bits
These bits are used to identify the revision.

Note 1: This location cannot be written.

© 2010-2015 Microchip Technology Inc.

5.0 OSCILLATOR MODULE (WITH FAIL-SAFE CLOCK MONITOR)

5.1 Overview

The oscillator module has a wide variety of clock sources and selection features that allow it to be used in a wide range of applications while maximizing performance and minimizing power consumption. Figure 5-1 illustrates a block diagram of the oscillator module.

Clock sources can be supplied from external oscillators, quartz crystal resonators, ceramic resonators and Resistor-Capacitor (RC) circuits. In addition, the system clock source can be supplied from one of two internal oscillators and PLL circuits, with a choice of speeds selectable via software. Additional clock features include:

- Selectable system clock source between external or internal sources via software.
- Two-Speed Start-up mode, which minimizes latency between external oscillator start-up and code execution.
- Fail-Safe Clock Monitor (FSCM) designed to detect a failure of the external clock source (LP, XT, HS, EC or RC modes) and switch automatically to the internal oscillator.
- Oscillator Start-up Timer (OST) ensures stability of crystal oscillator sources

The oscillator module can be configured in one of eight clock modes.

1. ECL – External Clock Low-Power mode (0 MHz to 0.5 MHz)
2. ECM – External Clock Medium-Power mode (0.5 MHz to 4 MHz)
3. ECH – External Clock High-Power mode (4 MHz to 32 MHz)
4. LP – 32 kHz Low-Power Crystal mode.
5. XT – Medium Gain Crystal or Ceramic Resonator Oscillator mode (up to 4 MHz)
6. HS – High Gain Crystal or Ceramic Resonator mode (4 MHz to 20 MHz)
7. RC – External Resistor-Capacitor (RC).
8. INTOSC – Internal oscillator (31 kHz to 32 MHz).

Clock Source modes are selected by the FOSC<2:0> bits in the Configuration Word 1. The FOSC bits determine the type of oscillator that will be used when the device is first powered.

The EC clock mode relies on an external logic level signal as the device clock source. The LP, XT, and HS clock modes require an external crystal or resonator to be connected to the device. Each mode is optimized for a different frequency range. The RC clock mode requires an external resistor and capacitor to set the oscillator frequency.

The INTOSC internal oscillator block produces low, medium, and high frequency clock sources, designated LFINTOSC, MFINTOSC, and HFINTOSC. (see Internal Oscillator Block, Figure 5-1). A wide selection of device clock frequencies may be derived from these three clock sources.

© 2010-2015 Microchip Technology Inc.

FIGURE 5-1: SIMPLIFIED PIC® MCU CLOCK SOURCE BLOCK DIAGRAM

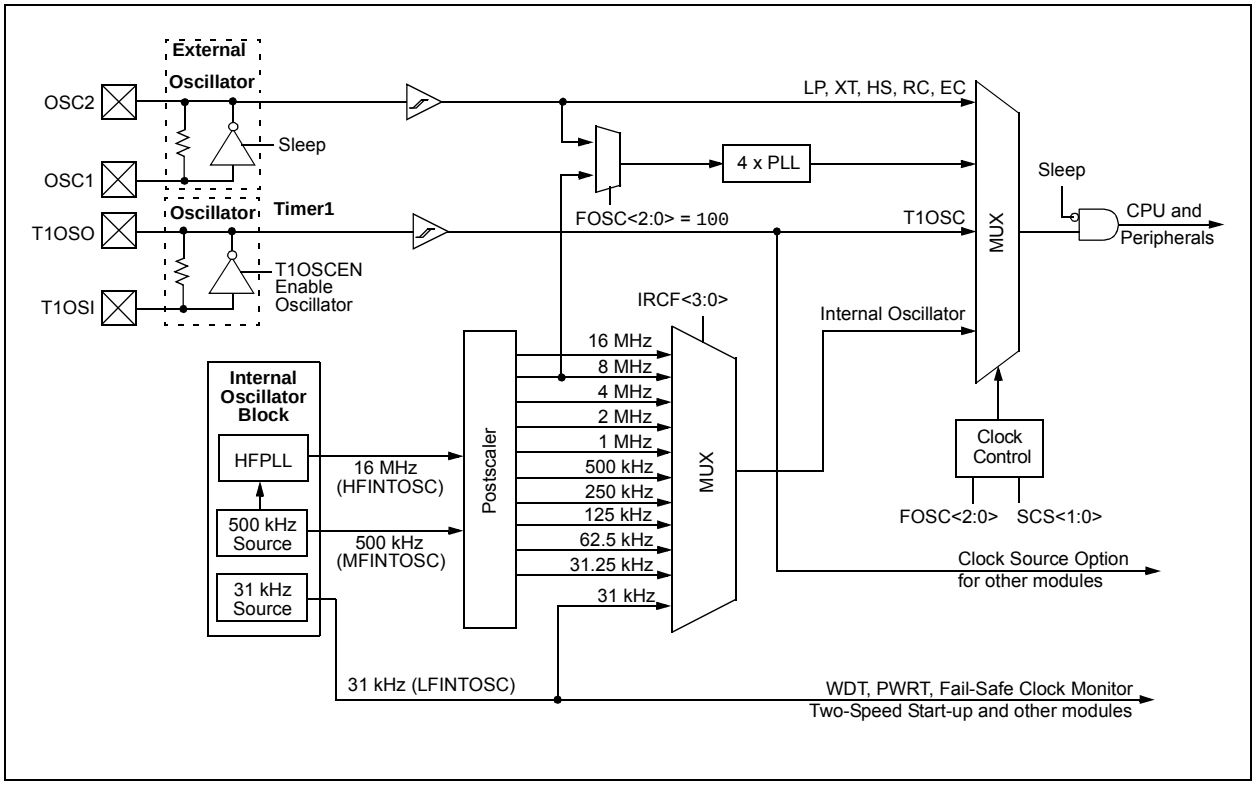

© 2010-2015 Microchip Technology Inc.

5.2 Clock Source Types

Clock sources can be classified as external or internal.

External clock sources rely on external circuitry for the clock source to function. Examples are: oscillator modules (EC mode), quartz crystal resonators or ceramic resonators (LP, XT and HS modes) and Resistor-Capacitor (RC) mode circuits.

Internal clock sources are contained internally within the oscillator module. The internal oscillator block has two internal oscillators and a dedicated Phase-Locked Loop (HFPLL) that are used to generate three internal system clock sources: the 16 MHz High-Frequency Internal Oscillator (HFINTOSC), 500 kHz (MFINTOSC) and the 31 kHz Low-Frequency Internal Oscillator (LFINTOSC).

The system clock can be selected between external or internal clock sources via the System Clock Select (SCS) bits in the OSCCON register. See **Section 5.3 "Clock Switching"** for additional information.

5.2.1 EXTERNAL CLOCK SOURCES

An external clock source can be used as the device system clock by performing one of the following actions:

- Program the FOSC<2:0> bits in the Configuration Word 1 to select an external clock source that will be used as the default system clock upon a device Reset.
- Write the SCS<1:0> bits in the OSCCON register to switch the system clock source to:
  - Timer1 Oscillator during run-time, or
  - An external clock source determined by the value of the FOSC bits.

See **Section 5.3 "Clock Switching"**for more information.

5.2.1.1 EC Mode

The External Clock (EC) mode allows an externally generated logic level signal to be the system clock source. When operating in this mode, an external clock source is connected to the OSC1 input. OSC2/CLKOUT is available for general purpose I/O or CLKOUT. Figure 5-2 shows the pin connections for EC mode.

EC mode has three power modes to select from through Configuration Word 1:

- High power, 4-32 MHz (FOSC = 111)
- Medium power, 0.5-4 MHz (FOSC = 110)
- Low power, 0-0.5 MHz (FOSC = 101)

The Oscillator Start-up Timer (OST) is disabled when EC mode is selected. Therefore, there is no delay in operation after a Power-on Reset (POR) or wake-up from Sleep. Because the PIC® MCU design is fully static, stopping the external clock input will have the effect of halting the device while leaving all data intact. Upon restarting the external clock, the device will resume operation as if no time had elapsed.

FIGURE 5-2: EXTERNAL CLOCK (EC) MODE OPERATION

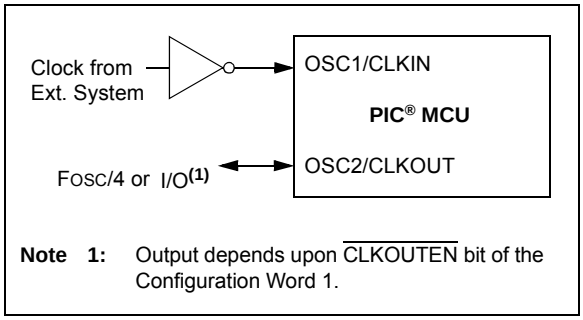

Note 1: Output depends upon $\overline{\text{CLKOUTEN}}$ bit of the Configuration Word 1.

5.2.1.2 LP, XT, HS Modes

The LP, XT and HS modes support the use of quartz crystal resonators or ceramic resonators connected to OSC1 and OSC2 (Figure 5-3). The three modes select a low, medium or high gain setting of the internal inverter-amplifier to support various resonator types and speed.

LP Oscillator mode selects the lowest gain setting of the internal inverter-amplifier. LP mode current consumption is the least of the three modes. This mode is designed to drive only 32.768 kHz tuning-fork type crystals (watch crystals).

XT Oscillator mode selects the intermediate gain setting of the internal inverter-amplifier. XT mode current consumption is the medium of the three modes. This mode is best suited to drive resonators with a medium drive level specification.

HS Oscillator mode selects the highest gain setting of the internal inverter-amplifier. HS mode current consumption is the highest of the three modes. This mode is best suited for resonators that require a high drive setting.

Figure 5-3 and Figure 5-4 show typical circuits for quartz crystal and ceramic resonators, respectively.

FIGURE 5-3: QUARTZ CRYSTAL OPERATION (LP, XT OR HS MODE)

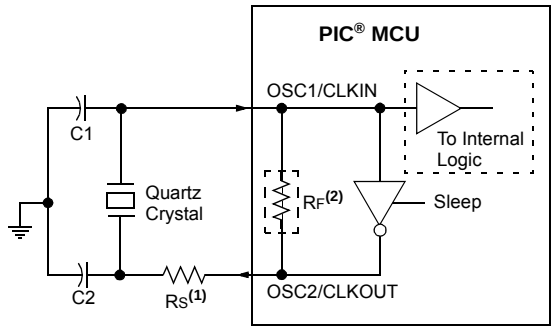

Note 1: A series resistor (RS) may be required for quartz crystals with low drive level.

2: The value of RF varies with the Oscillator mode selected (typically between 2 MΩ to 10 MΩ).

Note 1: Quartz crystal characteristics vary according to type, package and manufacturer. The user should consult the manufacturer data sheets for specifications and recommended application.

2: Always verify oscillator performance over the VDD and temperature range that is expected for the application.

3: For oscillator design assistance, reference the following Microchip Applications Notes:

- AN826, "*Crystal Oscillator Basics and Crystal Selection for rfPIC® and PIC® Devices*" (DS00826)
- AN849, "*Basic PIC® Oscillator Design*" (DS00849)
- AN943, "*Practical PIC® Oscillator Analysis and Design*" (DS00943)
- AN949, "*Making Your Oscillator Work*" (DS00949)

FIGURE 5-4: CERAMIC RESONATOR OPERATION (XT OR HS MODE)

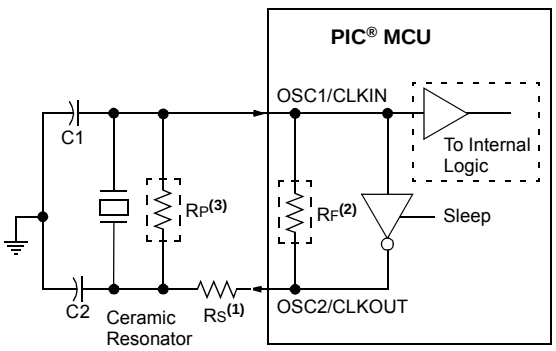

Note 1: A series resistor (RS) may be required for ceramic resonators with low drive level.

2: The value of RF varies with the Oscillator mode selected (typically between 2 MΩ to 10 MΩ).

3: An additional parallel feedback resistor (RP) may be required for proper ceramic resonator operation.

5.2.1.3 Oscillator Start-up Timer (OST)

If the oscillator module is configured for LP, XT or HS modes, the Oscillator Start-up Timer (OST) counts 1024 oscillations from OSC1. This occurs following a Power-on Reset (POR) and when the Power-up Timer (PWRT) has expired (if configured), or a wake-up from Sleep. During this time, the program counter does not increment and program execution is suspended unless either FSCM or Two-Speed Start-up are enabled. In this case, the code will continue to execute at the selected INTOSC frequency while the OST is counting. The OST ensures that the oscillator circuit, using a quartz crystal resonator or ceramic resonator, has started and is providing a stable system clock to the oscillator module.

In order to minimize latency between external oscillator start-up and code execution, the Two-Speed Clock Start-up mode can be selected (see **Section 5.4 "Two-Speed Clock Start-up Mode"**).

© 2010-2015 Microchip Technology Inc.

5.2.1.4 4xPLL

The oscillator module contains a 4xPLL that can be used with both external and internal clock sources to provide a system clock source. The input frequency for the 4xPLL must fall within specifications. See the PLL Clock Timing Specifications in **Section 30.0 "Electrical Specifications"**.

The 4xPLL may be enabled for use by one of two methods:

1. Program the PLLEN bit in Configuration Word 2 to a '1'.
2. Write the SPLLEN bit in the OSCCON register to a '1'. If the PLLEN bit in Configuration Word 2 is programmed to a '1', then the value of SPLLEN is ignored.

5.2.1.5 TIMER1 Oscillator

The Timer1 Oscillator is a separate crystal oscillator that is associated with the Timer1 peripheral. It is optimized for timekeeping operations with a 32.768 kHz crystal connected between the T1OSO and T1OSI device pins.

The Timer1 Oscillator can be used as an alternate system clock source and can be selected during run-time using clock switching. Refer to **Section 5.3 "Clock Switching"** for more information.

FIGURE 5-5: QUARTZ CRYSTAL OPERATION (TIMER1 OSCILLATOR)

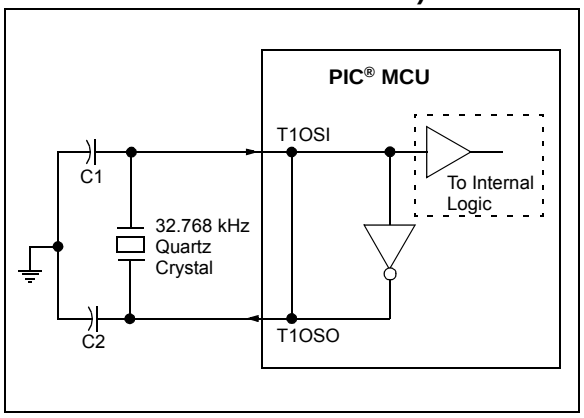

Note 1: Quartz crystal characteristics vary according to type, package and manufacturer. The user should consult the manufacturer data sheets for specifications and recommended application.

2: Always verify oscillator performance over the V_{DD} and temperature range that is expected for the application.

3: For oscillator design assistance, reference the following Microchip Applications Notes:

- AN826, "*Crystal Oscillator Basics and Crystal Selection for rfPIC® and PIC® Devices*" (DS00826)
- AN849, "*Basic PIC® Oscillator Design*" (DS00849)
- AN943, "*Practical PIC® Oscillator Analysis and Design*" (DS00943)
- AN949, "*Making Your Oscillator Work*" (DS00949)
- TB097, "*Interfacing a Micro Crystal MS1V-T1K 32.768 kHz Tuning Fork Crystal to a PIC16F690/SS*" (DS91097)
- AN1288, "*Design Practices for Low-Power External Oscillators*" (DS01288)

5.2.1.6 External RC Mode

The external Resistor-Capacitor (RC) modes support the use of an external RC circuit. This allows the designer maximum flexibility in frequency choice while keeping costs to a minimum when clock accuracy is not required.

The RC circuit connects to OSC1. OSC2/CLKOUT is available for general purpose I/O or CLKOUT. The function of the OSC2/CLKOUT pin is determined by the state of the CLKOUTEN bit in Configuration Word 1.

Figure 5-6 shows the external RC mode connections.

FIGURE 5-6: EXTERNAL RC MODES

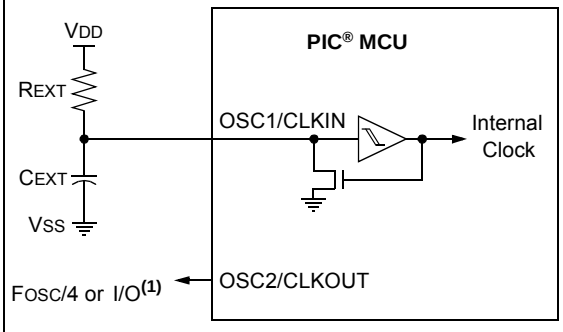

Recommended values: 10 kΩ ≤ REXT ≤ 100 kΩ, <3V
3 kΩ ≤ REXT ≤ 100 kΩ, 3-5V
CEXT > 20 pF, 2-5V

Note 1: Output depends upon CLKOUTEN bit of the Configuration Word 1.

The RC oscillator frequency is a function of the supply voltage, the resistor (REXT) and capacitor (CEXT) values and the operating temperature. Other factors affecting the oscillator frequency are:

- threshold voltage variation
- component tolerances
- packaging variations in capacitance

The user also needs to take into account variation due to tolerance of external RC components used.

5.2.2 INTERNAL CLOCK SOURCES

The device may be configured to use the internal oscillator block as the system clock by performing one of the following actions:

- Program the FOSC<2:0> bits in Configuration Word 1 to select the INTOSC clock source, which will be used as the default system clock upon a device Reset.
- Write the SCS<1:0> bits in the OSCCON register to switch the system clock source to the internal oscillator during run-time. See **Section 5.3 "Clock Switching"** for more information.

In **INTOSC** mode, OSC1/CLKIN is available for general purpose I/O. OSC2/CLKOUT is available for general purpose I/O or CLKOUT.

The function of the OSC2/CLKOUT pin is determined by the state of the CLKOUTEN bit in Configuration Word 1.

The internal oscillator block has two independent oscillators and a dedicated Phase-Locked Loop, HFPLL that can produce one of three internal system clock sources.

1. The **HFINTOSC** (High-Frequency Internal Oscillator) is factory calibrated and operates at 16 MHz. The HFINTOSC source is generated from the 500 kHz MFINTOSC source and the dedicated Phase-Locked Loop, HFPLL. The frequency of the HFINTOSC can be user-adjusted via software using the OSCTUNE register (Register 5-3).
2. The **MFINTOSC** (Medium-Frequency Internal Oscillator) is factory calibrated and operates at 500 kHz. The frequency of the MFINTOSC can be user-adjusted via software using the OSCTUNE register (Register 5-3).
3. The **LFINTOSC** (Low-Frequency Internal Oscillator) is uncalibrated and operates at 31 kHz.

© 2010-2015 Microchip Technology Inc.

5.2.2.1 HFINTOSC

The High-Frequency Internal Oscillator (HFINTOSC) is a factory calibrated 16 MHz internal clock source. The frequency of the HFINTOSC can be altered via software using the OSCTUNE register (Register 5-3).

The output of the HFINTOSC connects to a postscaler and multiplexer (see Figure 5-1). One of nine frequencies derived from the HFINTOSC can be selected via software using the IRCF<3:0> bits of the OSCCON register. See **Section 5.2.2.7 "Internal Oscillator Clock Switch Timing"** for more information.

The HFINTOSC is enabled by:

- Configure the IRCF<3:0> bits of the OSCCON register for the desired HF frequency, and
- FOSC<2:0> = 100, or
- Set the System Clock Source (SCS) bits of the OSCCON register to '1x'.

The High-Frequency Internal Oscillator Ready bit (HFIOFR) of the OSCSTAT register indicates when the HFINTOSC is running and can be utilized.

The High-Frequency Internal Oscillator Status Locked bit (HFIOFL) of the OSCSTAT register indicates when the HFINTOSC is running within 2% of its final value.

The High-Frequency Internal Oscillator Status Stable bit (HFIOFS) of the OSCSTAT register indicates when the HFINTOSC is running within 0.5% of its final value.

5.2.2.2 MFINTOSC

The Medium-Frequency Internal Oscillator (MFINTOSC) is a factory calibrated 500 kHz internal clock source. The frequency of the MFINTOSC can be altered via software using the OSCTUNE register (Register 5-3).

The output of the MFINTOSC connects to a postscaler and multiplexer (see Figure 5-1). One of nine frequencies derived from the MFINTOSC can be selected via software using the IRCF<3:0> bits of the OSCCON register. See **Section 5.2.2.7 "Internal Oscillator Clock Switch Timing"** for more information.

The MFINTOSC is enabled by:

- Configure the IRCF<3:0> bits of the OSCCON register for the desired HF frequency, and
- FOSC<2:0> = 100, or
- Set the System Clock Source (SCS) bits of the OSCCON register to '1x'

The Medium-Frequency Internal Oscillator Ready bit (MFIOFR) of the OSCSTAT register indicates when the MFINTOSC is running and can be utilized.

5.2.2.3 Internal Oscillator Frequency Adjustment

The 500 kHz internal oscillator is factory calibrated. This internal oscillator can be adjusted in software by writing to the OSCTUNE register (Register 5-3). Since the HFINTOSC and MFINTOSC clock sources are derived from the 500 kHz internal oscillator a change in the OSCTUNE register value will apply to both.

The default value of the OSCTUNE register is '0'. The value is a 6-bit two's complement number. A value of 1Fh will provide an adjustment to the maximum frequency. A value of 20h will provide an adjustment to the minimum frequency.

When the OSCTUNE register is modified, the oscillator frequency will begin shifting to the new frequency. Code execution continues during this shift. There is no indication that the shift has occurred.

OSCTUNE does not affect the LFINTOSC frequency. Operation of features that depend on the LFINTOSC clock source frequency, such as the Power-up Timer (PWRT), Watchdog Timer (WDT), Fail-Safe Clock Monitor (FSCM) and peripherals, are *not* affected by the change in frequency.

5.2.2.4 LFINTOSC

The Low-Frequency Internal Oscillator (LFINTOSC) is an uncalibrated 31 kHz internal clock source.

The output of the LFINTOSC connects to a multiplexer (see Figure 5-1). Select 31 kHz, via software, using the IRCF<3:0> bits of the OSCCON register. See **Section 5.2.2.7 "Internal Oscillator Clock Switch Timing"** for more information. The LFINTOSC is also the frequency for the Power-up Timer (PWRT), Watchdog Timer (WDT) and Fail-Safe Clock Monitor (FSCM).

The LFINTOSC is enabled by selecting 31 kHz (IRCF<3:0> bits of the OSCCON register = 000) as the system clock source (SCS bits of the OSCCON register = 1x), or when any of the following are enabled:

- Configure the IRCF<3:0> bits of the OSCCON register for the desired LF frequency, and
- FOSC<2:0> = 100, or
- Set the System Clock Source (SCS) bits of the OSCCON register to '1x'

Peripherals that use the LFINTOSC are:

- Power-up Timer (PWRT)
- Watchdog Timer (WDT)
- Fail-Safe Clock Monitor (FSCM)

The Low-Frequency Internal Oscillator Ready bit (LFIOFR) of the OSCSTAT register indicates when the LFINTOSC is running and can be utilized.

5.2.2.5 Internal Oscillator Frequency Selection

The system clock speed can be selected via software using the Internal Oscillator Frequency Select bits IRCF<3:0> of the OSCCON register.

The outputs of the 16 MHz HFINTOSC postscaler and the LFINTOSC connect to a multiplexer (see Figure 5-1). The Internal Oscillator Frequency Select bits IRCF<3:0> of the OSCCON register select the frequency output of the internal oscillators. One of the following frequencies can be selected via software:

- 32 MHz (requires 4xPLL)
- 16 MHz
- 8 MHz
- 4 MHz
- 2 MHz
- 1 MHz
- 500 kHz (Default after Reset)
- 250 kHz
- 125 kHz
- 62.5 kHz
- 31.25 kHz
- 31 kHz (LFINTOSC)

Note:	Following any Reset, the IRCF<3:0> bits of the OSCCON register are set to '0111' and the frequency selection is set to 500 kHz. The user can modify the IRCF bits to select a different frequency.

The IRCF<3:0> bits of the OSCCON register allow duplicate selections for some frequencies. These duplicate choices can offer system design trade-offs. Lower power consumption can be obtained when changing oscillator sources for a given frequency. Faster transition times can be obtained between frequency changes that use the same oscillator source.

5.2.2.6 32 MHz Internal Oscillator Frequency Selection

The Internal Oscillator Block can be used with the 4xPLL associated with the External Oscillator Block to produce a 32 MHz internal system clock source. The following settings are required to use the 32 MHz internal clock source:

- The FOSC bits in Configuration Word 1 must be set to use the INTOSC source as the device system clock (FOSC<2:0> = 100).
- The SCS bits in the OSCCON register must be cleared to use the clock determined by FOSC<2:0> in Configuration Word 1 (SCS<1:0> = 00).
- The IRCF bits in the OSCCON register must be set to the 8 MHz HFINTOSC set to use (IRCF<3:0> = 1110).
- The SPLLEN bit in the OSCCON register must be set to enable the 4xPLL, or the PLLEN bit of the Configuration Word 2 must be programmed to a '1'.

Note:	When using the PLLEN bit of the Configuration Word 2, the 4xPLL cannot be disabled by software and the 8 MHz HFINTOSC option will no longer be available.

The 4xPLL is not available for use with the internal oscillator when the SCS bits of the OSCCON register are set to '1x'. The SCS bits must be set to '00' to use the 4xPLL with the internal oscillator.

© 2010-2015 Microchip Technology Inc.

5.2.2.7 Internal Oscillator Clock Switch Timing

When switching between the HFINTOSC, MFINTOSC and the LFINTOSC, the new oscillator may already be shut down to save power (see Figure 5-7). If this is the case, there is a delay after the IRCF<3:0> bits of the OSCCON register are modified before the frequency selection takes place. The OSCSTAT register will reflect the current active status of the HFINTOSC, MFINTOSC and LFINTOSC oscillators. The sequence of a frequency selection is as follows:

1. IRCF<3:0> bits of the OSCCON register are modified.
2. If the new clock is shut down, a clock start-up delay is started.
3. Clock switch circuitry waits for a falling edge of the current clock.
4. The current clock is held low and the clock switch circuitry waits for a rising edge in the new clock.
5. The new clock is now active.
6. The OSCSTAT register is updated as required.
7. Clock switch is complete.

See Figure 5-7 for more details.

If the internal oscillator speed is switched between two clocks of the same source, there is no start-up delay before the new frequency is selected. Clock switching time delays are shown in Table 5-1.

Start-up delay specifications are located in the oscillator tables of **Section 30.0 "Electrical Specifications"**.

FIGURE 5-7: INTERNAL OSCILLATOR SWITCH TIMING

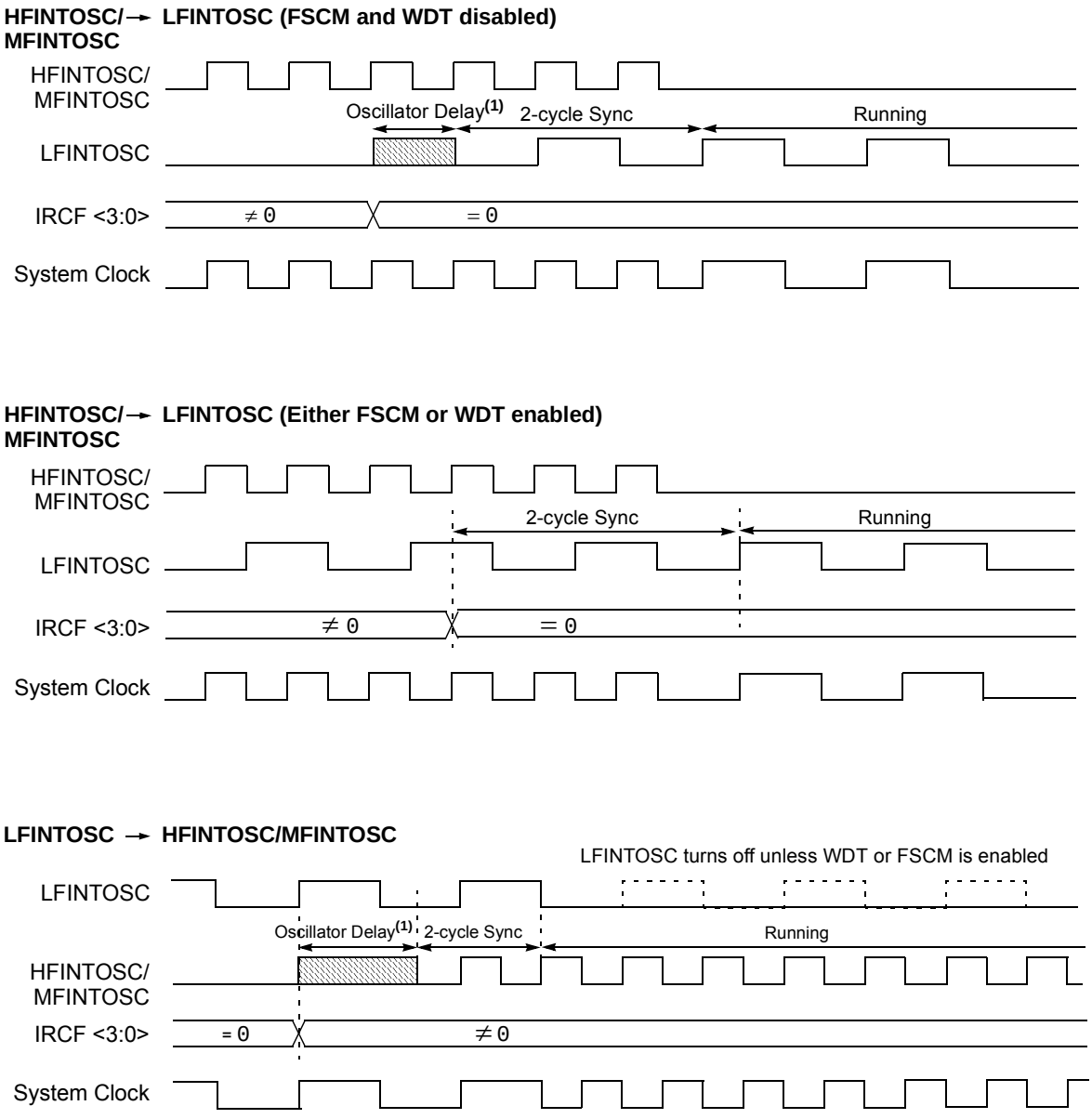

Note 1: See Table 5-1, “Oscillator Switching Delays” for more information.

© 2010-2015 Microchip Technology Inc.

5.3 Clock Switching

The system clock source can be switched between external and internal clock sources via software using the System Clock Select (SCS) bits of the OSCCON register. The following clock sources can be selected using the SCS bits:

- Default system oscillator determined by FOSC bits in Configuration Word 1
- Timer1 32 kHz crystal oscillator
- Internal Oscillator Block (INTOSC)

5.3.1 SYSTEM CLOCK SELECT (SCS) BITS

The System Clock Select (SCS) bits of the OSCCON register selects the system clock source that is used for the CPU and peripherals.

- When the SCS bits of the OSCCON register = 00, the system clock source is determined by value of the FOSC<2:0> bits in the Configuration Word 1.
- When the SCS bits of the OSCCON register = 01, the system clock source is the Timer1 oscillator.
- When the SCS bits of the OSCCON register = 1x, the system clock source is chosen by the internal oscillator frequency selected by the IRCF<3:0> bits of the OSCCON register. After a Reset, the SCS bits of the OSCCON register are always cleared.

Note:	Any automatic clock switch, which may occur from Two-Speed Start-up or Fail-Safe Clock Monitor, does not update the SCS bits of the OSCCON register. The user can monitor the OSTS bit of the OSCSTAT register to determine the current system clock source.

When switching between clock sources, a delay is required to allow the new clock to stabilize. These oscillator delays are shown in Table 5-1.

5.3.2 OSCILLATOR START-UP TIMER STATUS (OSTS) BIT

The Oscillator Start-up Timer Status (OSTS) bit of the OSCSTAT register indicates whether the system clock is running from the external clock source, as defined by the FOSC<2:0> bits in the Configuration Word 1, or from the internal clock source. In particular, OSTS indicates that the Oscillator Start-up Timer (OST) has timed out for LP, XT or HS modes. The OST does not reflect the status of the Timer1 Oscillator.

5.3.3 TIMER1 OSCILLATOR

The Timer1 Oscillator is a separate crystal oscillator associated with the Timer1 peripheral. It is optimized for timekeeping operations with a 32.768 kHz crystal connected between the T1OSO and T1OSI device pins.

The Timer1 oscillator is enabled using the T1OSCEN control bit in the T1CON register. See **Section 21.0 "Timer1 Module with Gate Control"** for more information about the Timer1 peripheral.

5.3.4 TIMER1 OSCILLATOR READY (T1OSCR) BIT

The user must ensure that the Timer1 Oscillator is ready to be used before it is selected as a system clock source. The Timer1 Oscillator Ready (T1OSCR) bit of the OSCSTAT register indicates whether the Timer1 oscillator is ready to be used. After the T1OSCR bit is set, the SCS bits can be configured to select the Timer1 oscillator.

5.4 Two-Speed Clock Start-up Mode

Two-Speed Start-up mode provides additional power savings by minimizing the latency between external oscillator start-up and code execution. In applications that make heavy use of the Sleep mode, Two-Speed Start-up will remove the external oscillator start-up time from the time spent awake and can reduce the overall power consumption of the device. This mode allows the application to wake-up from Sleep, perform a few instructions using the INTOSC internal oscillator block as the clock source and go back to Sleep without waiting for the external oscillator to become stable.

Two-Speed Start-up provides benefits when the oscillator module is configured for LP, XT, or HS modes. The Oscillator Start-up Timer (OST) is enabled for these modes and must count 1024 oscillations before the oscillator can be used as the system clock source.

If the oscillator module is configured for any mode other than LP, XT or HS mode, then Two-Speed Start-up is disabled. This is because the external clock oscillator does not require any stabilization time after POR or an exit from Sleep.

If the OST count reaches 1024 before the device enters Sleep mode, the OSTS bit of the OSCSTAT register is set and program execution switches to the external oscillator. However, the system may never operate from the external oscillator if the time spent awake is very short.

Note:	Executing a SLEEP instruction will abort the oscillator start-up time and will cause the OSTS bit of the OSCSTAT register to remain clear.

5.4.1 TWO-SPEED START-UP MODE CONFIGURATION

Two-Speed Start-up mode is configured by the following settings:

- IESO (of the Configuration Word 1) = 1; Internal/External Switchover bit (Two-Speed Start-up mode enabled).
- SCS (of the OSCCON register) = 00.
- FOSC<2:0> bits in the Configuration Word 1 configured for LP, XT or HS mode.

Two-Speed Start-up mode is entered after:

- Power-on Reset (POR) and, if enabled, after Power-up Timer (PWRT) has expired, or
- Wake-up from Sleep.

Note:	When FSCM is enabled, Two-Speed Start-up will automatically be enabled.

TABLE 5-1: OSCILLATOR SWITCHING DELAYS

Switch From	Switch To	Frequency	Oscillator Delay
Sleep/POR	LFINTOSC(1) MFINTOSC(1) HFINTOSC(1)	31 kHz 31.25 kHz-500 kHz 31.25 kHz-16 MHz	Oscillator Warm-up Delay (TWARM)
Sleep/POR	EC, RC(1)	DC – 32 MHz	2 cycles
LFINTOSC	EC, RC(1)	DC – 32 MHz	1 cycle of each
Sleep/POR	Timer1 Oscillator LP, XT, HS(1)	32 kHz-20 MHz	1024 Clock Cycles (OST)
Any clock source	MFINTOSC(1) HFINTOSC(1)	31.25 kHz-500 kHz 31.25 kHz-16 MHz	2 μs (approx.)
Any clock source	LFINTOSC(1)	31 kHz	1 cycle of each
Any clock source	Timer1 Oscillator	32 kHz	1024 Clock Cycles (OST)
PLL inactive	PLL active	16-32 MHz	2 ms (approx.)

Note 1: PLL inactive.

© 2010-2015 Microchip Technology Inc.

5.4.2 TWO-SPEED START-UP SEQUENCE

1. Wake-up from Power-on Reset or Sleep.
2. Instructions begin execution by the internal oscillator at the frequency set in the IRCF<3:0> bits of the OSCCON register.
3. OST enabled to count 1024 clock cycles.
4. OST timed out, wait for falling edge of the internal oscillator.
5. OSTS is set.
6. System clock held low until the next falling edge of new clock (LP, XT or HS mode).
7. System clock is switched to external clock source.

5.4.3 CHECKING TWO-SPEED CLOCK STATUS

Checking the state of the OSTS bit of the OSCSTAT register will confirm if the microcontroller is running from the external clock source, as defined by the FOSC<2:0> bits in the Configuration Word 1, or the internal oscillator.

FIGURE 5-8: TWO-SPEED START-UP

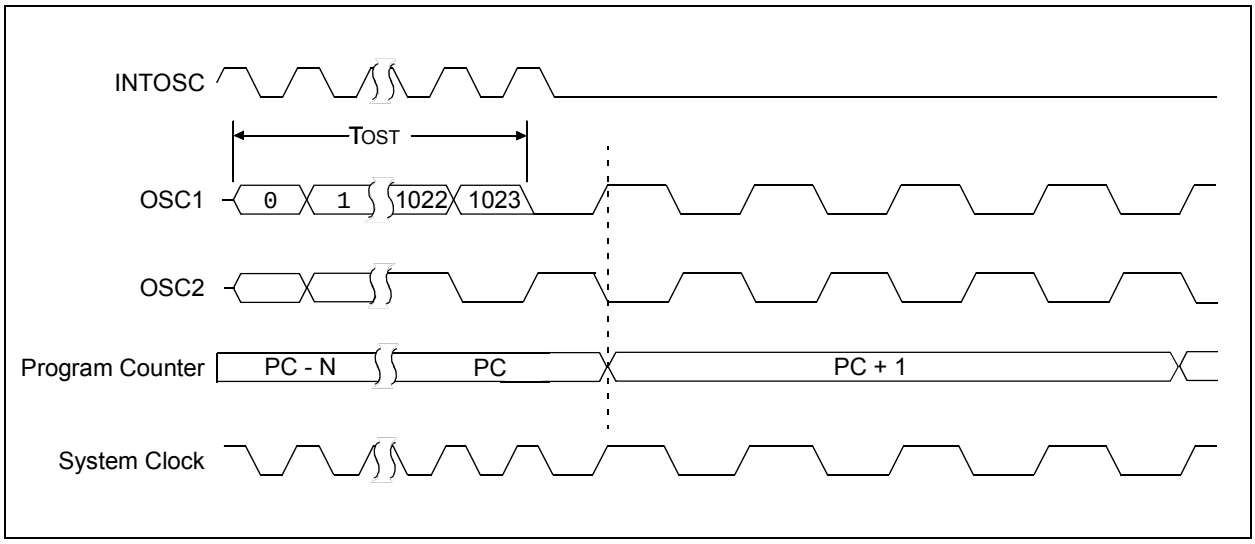

5.5 Fail-Safe Clock Monitor

The Fail-Safe Clock Monitor (FSCM) allows the device to continue operating should the external oscillator fail. The FSCM can detect oscillator failure any time after the Oscillator Start-up Timer (OST) has expired. The FSCM is enabled by setting the FCMEN bit in the Configuration Word 1. The FSCM is applicable to all external Oscillator modes (LP, XT, HS, EC, Timer1 Oscillator and RC).

FIGURE 5-9: FSCM BLOCK DIAGRAM

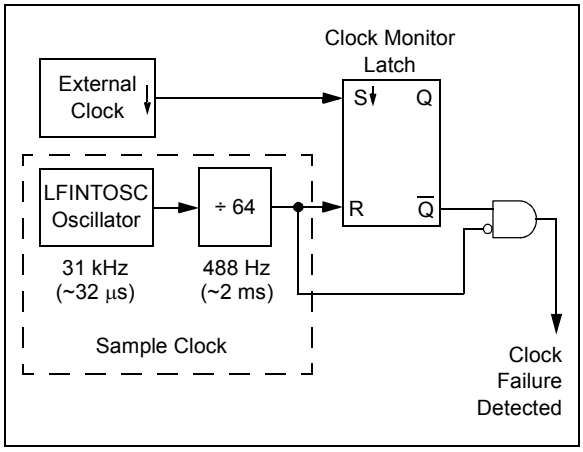

5.5.1 FAIL-SAFE DETECTION

The FSCM module detects a failed oscillator by comparing the external oscillator to the FSCM sample clock. The sample clock is generated by dividing the LFINTOSC by 64. See Figure 5-9. Inside the fail detector block is a latch. The external clock sets the latch on each falling edge of the external clock. The sample clock clears the latch on each rising edge of the sample clock. A failure is detected when an entire half-cycle of the sample clock elapses before the external clock goes low.

5.5.2 FAIL-SAFE OPERATION

When the external clock fails, the FSCM switches the device clock to an internal clock source and sets the bit flag OSFIF of the PIR2 register. Setting this flag will generate an interrupt if the OSFIE bit of the PIE2 register is also set. The device firmware can then take steps to mitigate the problems that may arise from a failed clock. The system clock will continue to be sourced from the internal clock source until the device firmware successfully restarts the external oscillator and switches back to external operation.

The internal clock source chosen by the FSCM is determined by the IRCF<3:0> bits of the OSCCON register. This allows the internal oscillator to be configured before a failure occurs.

5.5.3 FAIL-SAFE CONDITION CLEARING

The Fail-Safe condition is cleared after a Reset, executing a SLEEP instruction or changing the SCS bits of the OSCCON register. When the SCS bits are changed, the OST is restarted. While the OST is running, the device continues to operate from the INTOSC selected in OSCCON. When the OST times out, the Fail-Safe condition is cleared after successfully switching to the external clock source. The OSFIF bit should be cleared prior to switching to the external clock source. If the Fail-Safe condition still exists, the OSFIF flag will again become set by hardware.

5.5.4 RESET OR WAKE-UP FROM SLEEP

The FSCM is designed to detect an oscillator failure after the Oscillator Start-up Timer (OST) has expired. The OST is used after waking up from Sleep and after any type of Reset. The OST is not used with the EC or RC Clock modes so that the FSCM will be active as soon as the Reset or wake-up has completed. When the FSCM is enabled, the Two-Speed Start-up is also enabled. Therefore, the device will always be executing code while the OST is operating.

Note:	Due to the wide range of oscillator start-up times, the Fail-Safe circuit is not active during oscillator start-up (i.e., after exiting Reset or Sleep). After an appropriate amount of time, the user should check the Status bits in the OSCSTAT register to verify the oscillator start-up and that the system clock switchover has successfully completed.

© 2010-2015 Microchip Technology Inc.

FIGURE 5-10: FSCM TIMING DIAGRAM

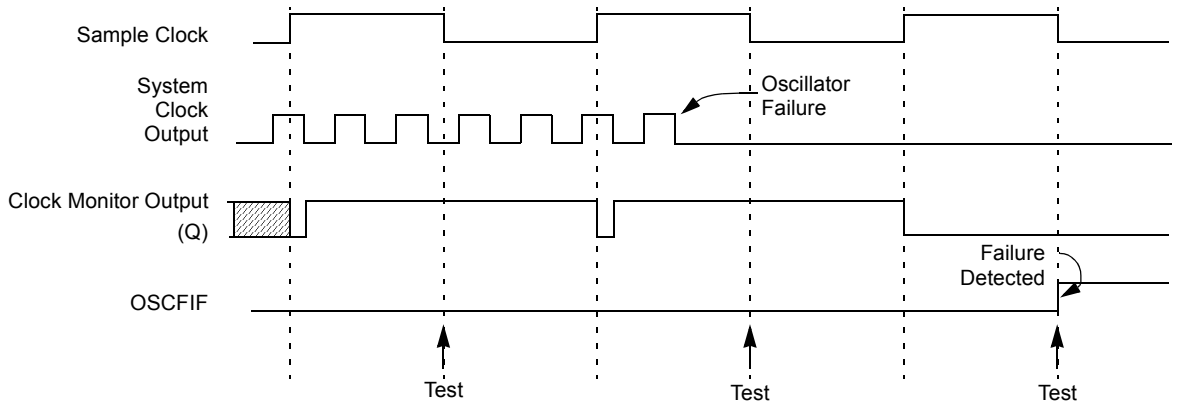

Note: The system clock is normally at a much higher frequency than the sample clock. The relative frequencies in this example have been chosen for clarity.

5.6 Oscillator Control Registers

REGISTER 5-1: OSCCON: OSCILLATOR CONTROL REGISTER

R/W-0/0	R/W-0/0	R/W-1/1	R/W-1/1	R/W-1/1	U-0	R/W-0/0	R/W-0/0
SPLLEN	IRCF<3:0>				—	SCS<1:0>	
bit 7							bit 0

Legend:		
R = Readable bit	W = Writable bit	U = Unimplemented bit, read as '0'
u = Bit is unchanged	x = Bit is unknown	-n/n = Value at POR and BOR/Value at all other Resets
'1' = Bit is set	'0' = Bit is cleared	

bit 7 **SPLLEN:** Software PLL Enable bit
If PLLEN in Configuration Word 1 = 1:
SPLLEN bit is ignored. 4xPLL is always enabled (subject to oscillator requirements)
If PLLEN in Configuration Word 1 = 0:
1 = 4xPLL Is enabled
0 = 4xPLL is disabled

bit 6-3 **IRCF<3:0>:** Internal Oscillator Frequency Select bits
000x = 31 kHz LF
0010 = 31.25 kHz MF
0011 = 31.25 kHz HF(1)
0100 = 62.5 kHz MF
0101 = 125 kHz MF
0110 = 250 kHz MF
0111 = 500 kHz MF (default upon Reset)
1000 = 125 kHz HF(1)
1001 = 250 kHz HF(1)
1010 = 500 kHz HF(1)
1011 = 1 MHz HF
1100 = 2 MHz HF
1101 = 4 MHz HF
1110 = 8 MHz or 32 MHz HF(see **Section 5.2.2.1 "HFINTOSC"**)
1111 = 16 MHz HF

bit 2 **Unimplemented:** Read as '0'

bit 1-0 **SCS<1:0>:** System Clock Select bits
1x = Internal oscillator block
01 = Timer1 oscillator
00 = Clock determined by FOSC<2:0> in Configuration Word 1.

Note 1: Duplicate frequency derived from HFINTOSC.

© 2010-2015 Microchip Technology Inc.

REGISTER 5-2: OSCSTAT: OSCILLATOR STATUS REGISTER

R-1/q	R-0/q	R-q/q	R-0/q	R-0/q	R-q/q	R-0/0	R-0/q
T1OSCR	PLLR	OSTS	HFIOFR	HFIOFL	MFIOFR	LFIOFR	HFIOFS
bit 7							bit 0

Legend:		
R = Readable bit	W = Writable bit	U = Unimplemented bit, read as ‘0’
u = Bit is unchanged	x = Bit is unknown	-n/n = Value at POR and BOR/Value at all other Resets
‘1’ = Bit is set	‘0’ = Bit is cleared	q = Conditional

bit 7 **T1OSCR:** Timer1 Oscillator Ready bit
If T1OSCEN = 1:
1 = Timer1 oscillator is ready
0 = Timer1 oscillator is not ready
If T1OSCEN = 0:
1 = Timer1 clock source is always ready

bit 6 **PLLR** 4xPLL Ready bit
1 = 4xPLL is ready
0 = 4xPLL is not ready

bit 5 **OSTS:** Oscillator Start-up Timer Status bit
1 = Running from the clock defined by the FOSC<2:0> bits of the Configuration Word 1
0 = Running from an internal oscillator (FOSC<2:0> = 100)

bit 4 **HFIOFR:** High-Frequency Internal Oscillator Ready bit
1 = HFINTOSC is ready
0 = HFINTOSC is not ready

bit 3 **HFIOFL:** High-Frequency Internal Oscillator Locked bit
1 = HFINTOSC is at least 2% accurate
0 = HFINTOSC is not 2% accurate

bit 2 **MFIOFR:** Medium-Frequency Internal Oscillator Ready bit
1 = MFINTOSC is ready
0 = MFINTOSC is not ready

bit 1 **LFIOFR:** Low-Frequency Internal Oscillator Ready bit
1 = LFINTOSC is ready
0 = LFINTOSC is not ready

bit 0 **HFIOFS:** High-Frequency Internal Oscillator Stable bit
1 = HFINTOSC is at least 0.5% accurate
0 = HFINTOSC is not 0.5% accurate

REGISTER 5-3: OSCTUNE: OSCILLATOR TUNING REGISTER

U-0	U-0	R/W-0/0	R/W-0/0	R/W-0/0	R/W-0/0	R/W-0/0	R/W-0/0
—	—	TUN<5:0>					
bit 7							bit 0

Legend:		
R = Readable bit	W = Writable bit	U = Unimplemented bit, read as '0'
u = Bit is unchanged	x = Bit is unknown	-n/n = Value at POR and BOR/Value at all other Resets
'1' = Bit is set	'0' = Bit is cleared	

bit 7-6 **Unimplemented:** Read as '0'

bit 5-0 **TUN<4:0>:** Frequency Tuning bits

011111 = Maximum frequency
011110 =
•
•
•
000001 =
000000 = Oscillator module is running at the factory-calibrated frequency.
111111 =
•
•
•
100000 = Minimum frequency

TABLE 5-2: SUMMARY OF REGISTERS ASSOCIATED WITH CLOCK SOURCES

Name	Bit 7	Bit 6	Bit 5	Bit 4	Bit 3	Bit 2	Bit 1	Bit 0	Register on Page
OSCCON	SPLLEN	IRCF<3:0>				—	SCS<1:0>		68
OSCSTAT	T1OSCR	PLLR	OSTS	HFIOFR	HFIOFL	MFIOFR	LFIOFR	HFIOFS	69
OSCTUNE	—	—	TUN<5:0>						70
PIE2	OSFIE	C2IE	C1IE	EEIE	BCL1IE	—	—	CCP2IE	91
PIR2	OSFIF	C2IF	C1IF	EEIF	BCL1IF	—	—	CCP2IF	94
T1CON	TMR1CS<1:0>		T1CKPS<1:0>		T1OSCEN	$\overline{\text{T1SYNC}}$	—	TMR1ON	186

Legend: — = unimplemented location, read as '0'. Shaded cells are not used by clock sources.

TABLE 5-3: SUMMARY OF CONFIGURATION WORD WITH CLOCK SOURCES

Name	Bits	Bit -/7	Bit -/6	Bit 13/5	Bit 12/4	Bit 11/3	Bit 10/2	Bit 9/1	Bit 8/0	Register on Page
CONFIG1	13:8	—	—	FCMEN	IESO	$\overline{\text{CLKOUTEN}}$	BOREN<1:0>		$\overline{\text{CPD}}$	48
	7:0	$\overline{\text{CP}}$	MCLRE	$\overline{\text{PWRTE}}$	WDTE<1:0>		FOSC<2:0>			

Legend: — = unimplemented location, read as '0'. Shaded cells are not used by clock sources.

© 2010-2015 Microchip Technology Inc.

6.0 REFERENCE CLOCK MODULE

The reference clock module provides the ability to send a divided clock to the clock output pin of the device (CLKR) and provide a secondary internal clock source to the modulator module. This module is available in all oscillator configurations and allows the user to select a greater range of clock sub-multiples to drive external devices in the application. The reference clock module includes the following features:

- System clock is the source
- Available in all oscillator configurations
- Programmable clock divider
- Output enable to a port pin
- Selectable duty cycle
- Slew rate control

The reference clock module is controlled by the CLKRCON register (Register 6-1) and is enabled when setting the CLKREN bit. To output the divided clock signal to the CLKR port pin, the CLKROE bit must be set. The CLKRDIV<2:0> bits enable the selection of 8 different clock divider options. The CLKRDC<1:0> bits can be used to modify the duty cycle of the output clock(1). The CLKRSLR bit controls slew rate limiting.

Note 1:	If the base clock rate is selected without a divider, the output clock will always have a duty cycle equal to that of the source clock, unless a 0% duty cycle is selected. If the clock divider is set to base clock/2, then 25% and 75% duty cycle accuracy will be dependent upon the source clock.

For information on using the reference clock output with the modulator module, see **Section 23.0 "Data Signal Modulator"**.

6.1 Slew Rate

The slew rate limitation on the output port pin can be disabled. The Slew Rate limitation can be removed by clearing the CLKRSLR bit in the CLKRCON register.

6.2 Effects of a Reset

Upon any device Reset, the reference clock module is disabled. The user's firmware is responsible for initializing the module before enabling the output. The registers are reset to their default values.

6.3 Conflicts with the CLKR pin

There are two cases when the reference clock output signal cannot be output to the CLKR pin, if:

- LP, XT, or HS oscillator mode is selected.
- CLKOUT function is enabled.

Even if either of these cases are true, the module can still be enabled and the reference clock signal may be used in conjunction with the modulator module.

6.3.1 OSCILLATOR MODES

If LP, XT, or HS oscillator modes are selected, the OSC2/CLKR pin must be used as an oscillator input pin and the CLKR output cannot be enabled. See **Section 5.2 "Clock Source Types"** for more information on different oscillator modes.

6.3.2 CLKOUT FUNCTION

The CLKOUT function has a higher priority than the reference clock module. Therefore, if the CLKOUT function is enabled by the CLKOUTEN bit in Configuration Word 1, FOSC/4 will always be output on the port pin. Reference **Section 4.0 "Device Configuration"** for more information.

6.4 Operation During Sleep

As the reference clock module relies on the system clock as its source, and the system clock is disabled in Sleep, the module does not function in Sleep, even if an external clock source or the Timer1 clock source is configured as the system clock. The module outputs will remain in their current state until the device exits Sleep.

REGISTER 6-1: CLKRCON: REFERENCE CLOCK CONTROL REGISTER

R/W-0/0	R/W-0/0	R/W-1/1	R/W-1/1	R/W-0/0	R/W-0/0	R/W-0/0	R/W-0/0
CLKREN	CLKROE	CLKRSLR	CLKRDC<1:0>		CLKRDIV<2:0>		
bit 7							bit 0

Legend:		
R = Readable bit	W = Writable bit	U = Unimplemented bit, read as '0'
u = Bit is unchanged	x = Bit is unknown	-n/n = Value at POR and BOR/Value at all other Resets
'1' = Bit is set	'0' = Bit is cleared	

bit 7 **CLKREN:** Reference Clock Module Enable bit
- 1 = Reference Clock module is enabled
- 0 = Reference Clock module is disabled

bit 6 **CLKROE:** Reference Clock Output Enable bit(3)
- 1 = Reference Clock output is enabled on CLKR pin
- 0 = Reference Clock output disabled on CLKR pin

bit 5 **CLKRSLR:** Reference Clock Slew Rate Control Limiting Enable bit
- 1 = Slew Rate limiting is enabled
- 0 = Slew Rate limiting is disabled

bit 4-3 **CLKRDC<1:0>:** Reference Clock Duty Cycle bits
- 11 = Clock outputs duty cycle of 75%
- 10 = Clock outputs duty cycle of 50%
- 01 = Clock outputs duty cycle of 25%
- 00 = Clock outputs duty cycle of 0%

bit 2-0 **CLKRDIV<2:0>** Reference Clock Divider bits
- 111 = Base clock value divided by 128
- 110 = Base clock value divided by 64
- 101 = Base clock value divided by 32
- 100 = Base clock value divided by 16
- 011 = Base clock value divided by 8
- 010 = Base clock value divided by 4
- 001 = Base clock value divided by 2(1)
- 000 = Base clock value(2)

Note 1: In this mode, the 25% and 75% duty cycle accuracy will be dependent on the source clock duty cycle.

2: In this mode, the duty cycle will always be equal to the source clock duty cycle, unless a duty cycle of 0% is selected.

3: To route CLKR to pin, $\overline{\text{CLKOUTEN}}$ of Configuration Word 1 = 1 is required. $\overline{\text{CLKOUTEN}}$ of Configuration Word 1 = 0 will result in FOSC/4. See **Section 6.3 "Conflicts with the CLKR pin"** for details.

© 2010-2015 Microchip Technology Inc.

TABLE 6-1: SUMMARY OF REGISTERS ASSOCIATED WITH REFERENCE CLOCK SOURCES

Name	Bit 7	Bit 6	Bit 5	Bit 4	Bit 3	Bit 2	Bit 1	Bit 0	Register on Page
CLKRCON	CLKREN	CLKROE	CLKRSLR	CLKRDC<1:0>		CLKRDIV<2:0>			72

Legend: — = unimplemented locations, read as '0'. Shaded cells are not used by reference clock sources.

TABLE 6-2: SUMMARY OF CONFIGURATION WORD WITH REFERENCE CLOCK SOURCES

Name	Bits	Bit -/7	Bit -/6	Bit 13/5	Bit 12/4	Bit 11/3	Bit 10/2	Bit 9/1	Bit 8/0	Register on Page
CONFIG1	13:8	—	—	FCMEN	IESO	$\overline{\text{CLKOUTEN}}$	BOREN<1:0>		$\overline{\text{CPD}}$	48
	7:0	$\overline{\text{CP}}$	MCLRE	$\overline{\text{PWRTE}}$	WDTE<1:0>		FOSC<2:0>			

Legend: — = unimplemented locations, read as '0'. Shaded cells are not used by reference clock sources.

7.0 RESETS

There are multiple ways to reset this device:

- Power-on Reset (POR)
- Brown-out Reset (BOR)
- $\overline{\text{MCLR}}$ Reset
- WDT Reset
- RESET instruction
- Stack Overflow
- Stack Underflow
- Programming mode exit

To allow VDD to stabilize, an optional Power-up Timer can be enabled to extend the Reset time after a BOR or POR event.

A simplified block diagram of the On-Chip Reset Circuit is shown in Figure 7-1.

FIGURE 7-1: SIMPLIFIED BLOCK DIAGRAM OF ON-CHIP RESET CIRCUIT

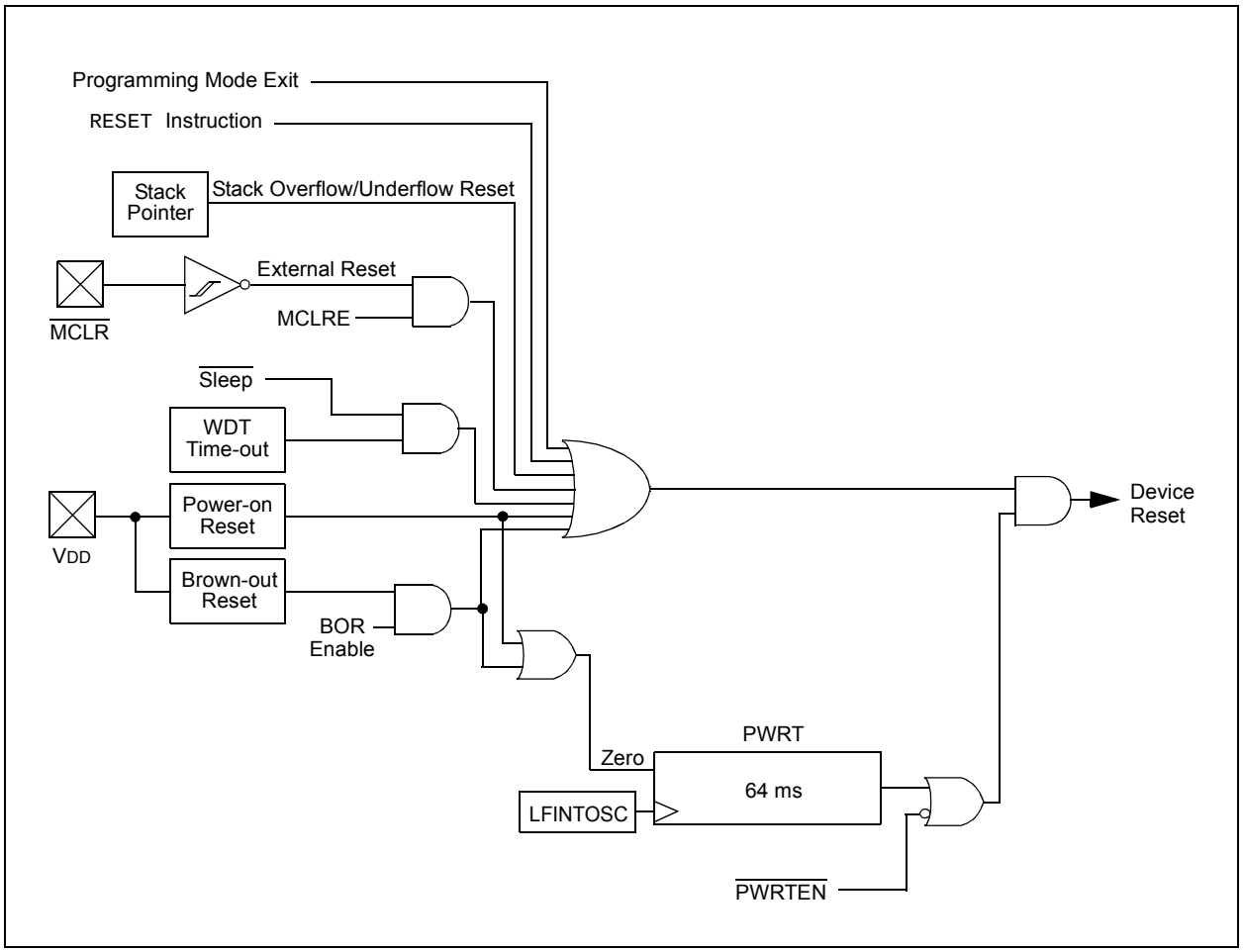

© 2010-2015 Microchip Technology Inc.

7.1 Power-on Reset (POR)

The POR circuit holds the device in Reset until VDD has reached an acceptable level for minimum operation. Slow rising VDD, fast operating speeds or analog performance may require greater than minimum VDD. The PWRT, BOR or MCLR features can be used to extend the start-up period until all device operation conditions have been met.

7.1.1 POWER-UP TIMER (PWRT)

The Power-up Timer provides a nominal 64 ms time-out on POR or Brown-out Reset.

The device is held in Reset as long as PWRT is active. The PWRT delay allows additional time for the VDD to rise to an acceptable level. The Power-up Timer is enabled by clearing the PWRTE bit in Configuration Word 1.

The Power-up Timer starts after the release of the POR and BOR.

For additional information, refer to Application Note AN607, *"Power-up Trouble Shooting"* (DS00607).

7.2 Brown-Out Reset (BOR)

The BOR circuit holds the device in Reset when VDD reaches a selectable minimum level. Between the POR and BOR, complete voltage range coverage for execution protection can be implemented.

The Brown-out Reset module has four operating modes controlled by the BOREN<1:0> bits in Configuration Word 1. The four operating modes are:

- BOR is always on
- BOR is off when in Sleep
- BOR is controlled by software
- BOR is always off

Refer to Table 7-3 for more information.

The Brown-out Reset voltage level is selectable by configuring the BORV bit in Configuration Word 2.

A VDD noise rejection filter prevents the BOR from triggering on small events. If VDD falls below VBOR for a duration greater than parameter TBORDC, the device will reset. See Figure 7-3 for more information.

TABLE 7-1: BOR OPERATING MODES

BOREN Config bits	SBOREN	Device Mode	BOR Mode	Device Operation upon release of POR	Device Operation upon wake-up from Sleep
BOR_ON (11)	X	X	Active	Waits for BOR ready(1)	
BOR_NSLEEP (10)	X	Awake	Active	Waits for BOR ready	
BOR_NSLEEP (10)	X	Sleep	Disabled		
BOR_SBOREN (01)	1	X	Active	Begins immediately	
BOR_SBOREN (01)	0	X	Disabled	Begins immediately	
BOR_OFF (00)	X	X	Disabled	Begins immediately	

Note 1: In these specific cases, "Release of POR" and the "Wake-up from Sleep", there is no delay in start-up. The BOR Ready flag (BORRDY = 1) will be set before the CPU is ready to execute instructions because the BOR circuit is forced on by the BOREN<1:0> bits.

7.2.1 BOR IS ALWAYS ON

When the BOREN bits of Configuration Word 1 are set to '11', the BOR is always on. The device start-up will be delayed until the BOR is ready and VDD is higher than the BOR threshold.

BOR protection is active during Sleep. The BOR does not delay wake-up from Sleep.

7.2.2 BOR IS OFF IN SLEEP

When the BOREN bits of Configuration Word 1 are set to '10', the BOR is on, except in Sleep. The device start-up will be delayed until the BOR is ready and VDD is higher than the BOR threshold.

BOR protection is not active during Sleep. The device wake-up will be delayed until the BOR is ready.

7.2.3 BOR CONTROLLED BY SOFTWARE

When the BOREN bits of Configuration Word 1 are set to '01', the BOR is controlled by the SBOREN bit of the BORCON register. The device start-up is not delayed by the BOR ready condition or the VDD level.

BOR protection begins as soon as the BOR circuit is ready. The status of the BOR circuit is reflected in the BORRDY bit of the BORCON register.

BOR protection is unchanged by Sleep.

FIGURE 7-2: BROWN-OUT READY

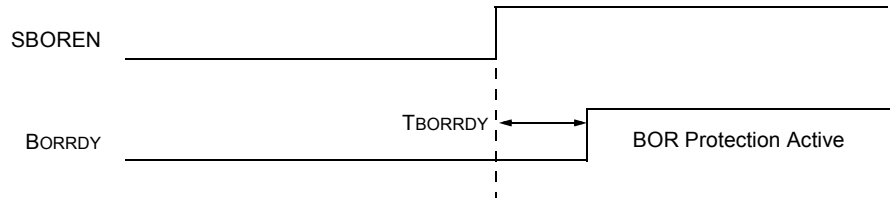

FIGURE 7-3: BROWN-OUT SITUATIONS

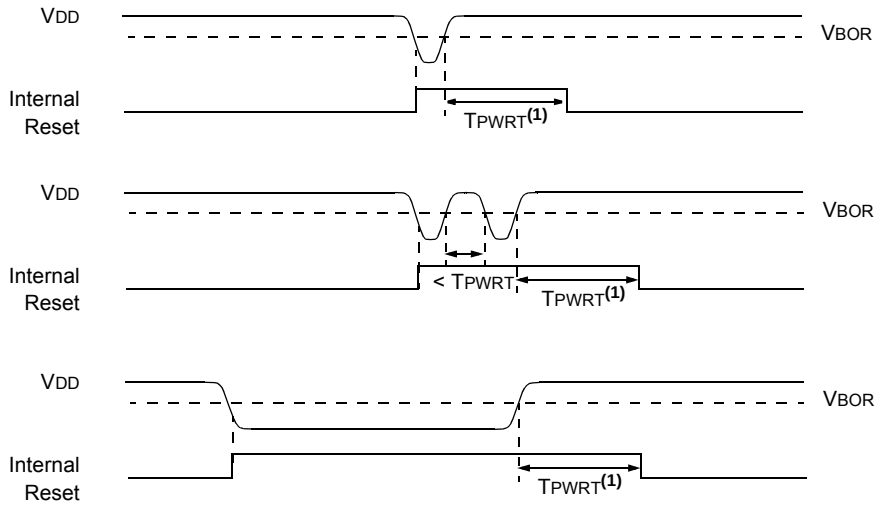

Note 1: TPWRT delay only if $\overline{\text{PWRTE}}$ bit is programmed to '0'.

© 2010-2015 Microchip Technology Inc.

REGISTER 7-1: BORCON: BROWN-OUT RESET CONTROL REGISTER

R/W-1/u	U-0	U-0	U-0	U-0	U-0	U-0	R-q/u
SBOREN	—	—	—	—	—	—	BORRDY
bit 7							bit 0

Legend:		
R = Readable bit	W = Writable bit	U = Unimplemented bit, read as ‘0’
u = Bit is unchanged	x = Bit is unknown	-n/n = Value at POR and BOR/Value at all other Resets
‘1’ = Bit is set	‘0’ = Bit is cleared	q = Value depends on condition

bit 7 **SBOREN:** Software Brown-out Reset Enable bit
If BOREN <1:0> in Configuration Word 1 ≠ 01:
SBOREN is read/write, but has no effect on the BOR.
If BOREN <1:0> in Configuration Word 1 = 01:
1 = BOR Enabled
0 = BOR Disabled

bit 6-1 **Unimplemented:** Read as ‘0’

bit 0 **BORRDY:** Brown-out Reset Circuit Ready Status bit
1 = The Brown-out Reset circuit is active
0 = The Brown-out Reset circuit is inactive

7.3 MCLR

The MCLR is an optional external input that can reset the device. The MCLR function is controlled by the MCLRE bit of Configuration Word 1 and the LVP bit of Configuration Word 2 (Table 7-2).

TABLE 7-2: MCLR CONFIGURATION

MCLRE	LVP	MCLR
0	0	Disabled
1	0	Enabled
x	1	Enabled

7.3.1 MCLR ENABLED

When MCLR is enabled and the pin is held low, the device is held in Reset. The MCLR pin is connected to VDD through an internal weak pull-up.

The device has a noise filter in the MCLR Reset path. The filter will detect and ignore small pulses.

Note: A Reset does not drive the MCLR pin low.

7.3.2 MCLR DISABLED

When MCLR is disabled, the pin functions as a general purpose input and the internal weak pull-up is under software control. See **Section 12.2 "PORTA Registers"** for more information.

7.4 Watchdog Timer (WDT) Reset

The Watchdog Timer generates a Reset if the firmware does not issue a CLRWDT instruction within the time-out period. The TO and PD bits in the STATUS register are changed to indicate the WDT Reset. See **Section 10.0 "Watchdog Timer"** for more information.

7.5 RESET Instruction

A RESET instruction will cause a device Reset. The RI bit in the PCON register will be set to '0'. See Table 7-4 for default conditions after a RESET instruction has occurred.

7.6 Stack Overflow/Underflow Reset

The device can reset when the Stack Overflows or Underflows. The STKOVF or STKUNF bits of the PCON register indicate the Reset condition. These Resets are enabled by setting the STVREN bit in Configuration Word 2. See **Section 3.4.2 "Overflow/Underflow Reset"** for more information.

7.7 Programming Mode Exit

Upon exit of Programming mode, the device will behave as if a POR had just occurred.

7.8 Power-up Timer

The Power-up Timer optionally delays device execution after a BOR or POR event. This timer is typically used to allow VDD to stabilize before allowing the device to start running.

The Power-up Timer is controlled by the PWRTE bit of Configuration Word 1.

7.9 Start-up Sequence

Upon the release of a POR or BOR, the following must occur before the device will begin executing:

1. Power-up Timer runs to completion (if enabled).
2. Oscillator start-up timer runs to completion (if required for oscillator source).
3. MCLR must be released (if enabled).

The total time-out will vary based on oscillator configuration and Power-up Timer configuration. See **Section 5.0 "Oscillator Module (With Fail-Safe Clock Monitor)"** for more information.

The Power-up Timer and oscillator start-up timer run independently of MCLR Reset. If MCLR is kept low long enough, the Power-up Timer and oscillator start-up timer will expire. Upon bringing MCLR high, the device will begin execution immediately (see Figure 7-4). This is useful for testing purposes or to synchronize more than one device operating in parallel.

© 2010-2015 Microchip Technology Inc.

FIGURE 7-4: RESET START-UP SEQUENCE

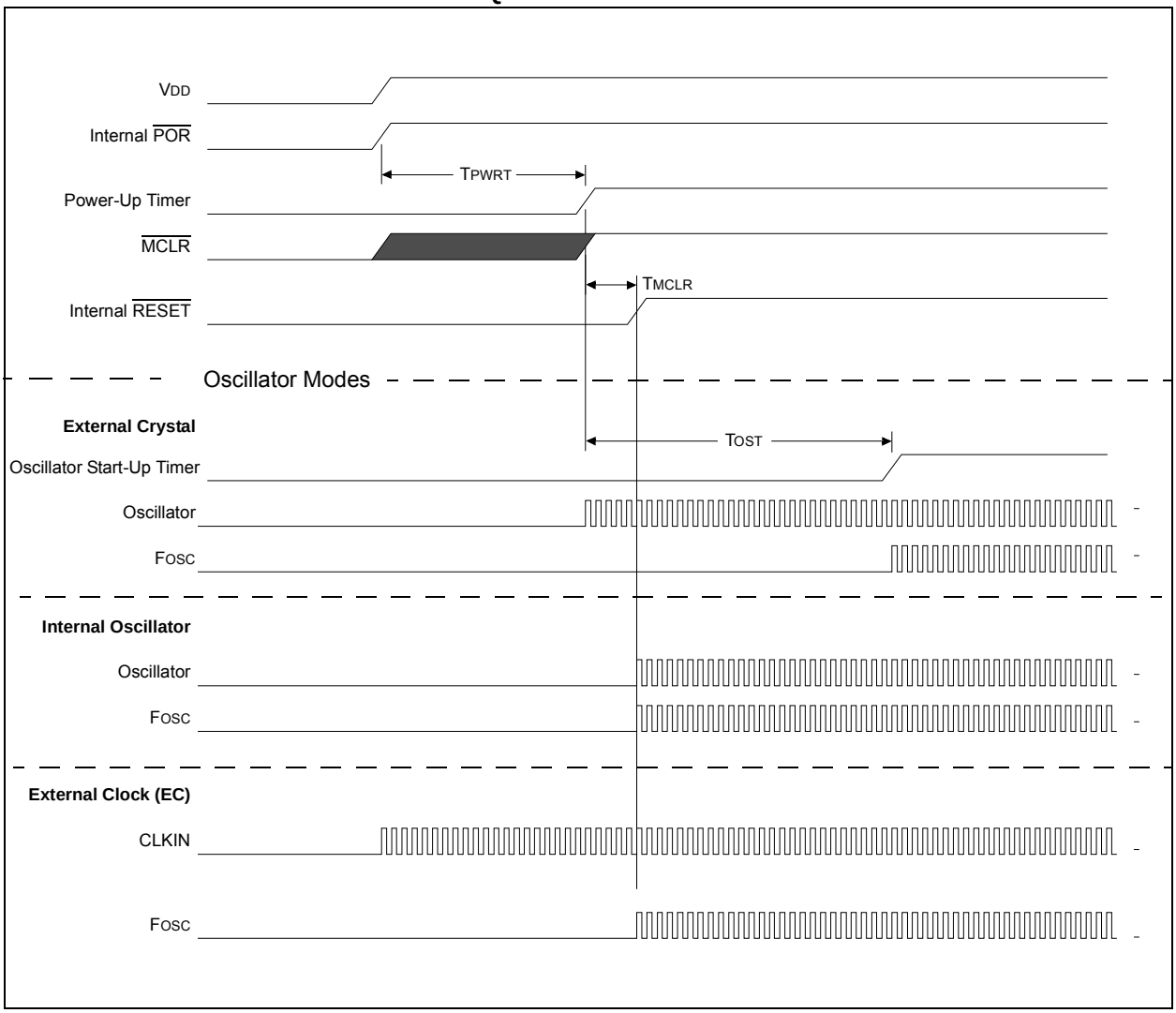

7.10 Determining the Cause of a Reset

Upon any Reset, multiple bits in the STATUS and PCON register are updated to indicate the cause of the Reset. Table 7-3 and Table 7-4 show the Reset conditions of these registers.

TABLE 7-3: RESET STATUS BITS AND THEIR SIGNIFICANCE

STKOVF	STKUNF	$\overline{\text{RMCLR}}$	$\overline{\text{RI}}$	$\overline{\text{POR}}$	$\overline{\text{BOR}}$	$\overline{\text{TO}}$	$\overline{\text{PD}}$	Condition
0	0	1	1	0	x	1	1	Power-on Reset
0	0	1	1	0	x	0	x	Illegal, $\overline{\text{TO}}$ is set on $\overline{\text{POR}}$
0	0	1	1	0	x	x	0	Illegal, $\overline{\text{PD}}$ is set on $\overline{\text{POR}}$
0	0	1	1	u	0	1	1	Brown-out Reset
u	u	u	u	u	u	0	u	WDT Reset
u	u	u	u	u	u	0	0	WDT Wake-up from Sleep
u	u	u	u	u	u	1	0	Interrupt Wake-up from Sleep
u	u	0	u	u	u	u	u	$\overline{\text{MCLR}}$ Reset during normal operation
u	u	0	u	u	u	1	0	$\overline{\text{MCLR}}$ Reset during Sleep
u	u	u	0	u	u	u	u	RESET Instruction Executed
1	u	u	u	u	u	u	u	Stack Overflow Reset (STVREN = 1)
u	1	u	u	u	u	u	u	Stack Underflow Reset (STVREN = 1)

TABLE 7-4: RESET CONDITION FOR SPECIAL REGISTERS(2)

Condition	Program Counter	STATUS Register	PCON Register
Power-on Reset	0000h	---1 1000	00-- 110x
$\overline{\text{MCLR}}$ Reset during normal operation	0000h	---u uuuu	uu-- 0uuu
$\overline{\text{MCLR}}$ Reset during Sleep	0000h	---1 0uuu	uu-- 0uuu
WDT Reset	0000h	---0 uuuu	uu-- uuuu
WDT Wake-up from Sleep	PC + 1	---0 0uuu	uu-- uuuu
Brown-out Reset	0000h	---1 1uuu	00-- 11u0
Interrupt Wake-up from Sleep	PC + 1(1)	---1 0uuu	uu-- uuuu
RESET Instruction Executed	0000h	---u uuuu	uu-- u0uu
Stack Overflow Reset (STVREN = 1)	0000h	---u uuuu	1u-- uuuu
Stack Underflow Reset (STVREN = 1)	0000h	---u uuuu	u1-- uuuu

Legend: u = unchanged, x = unknown, - = unimplemented bit, reads as '0'.

Note 1: When the wake-up is due to an interrupt and Global Interrupt Enable bit (GIE) is set, the return address is pushed on the stack and PC is loaded with the interrupt vector (0004h) after execution of PC + 1.

2: If a Status bit is not implemented, that bit will be read as '0'.

© 2010-2015 Microchip Technology Inc.

7.11 Power Control (PCON) Register

The Power Control (PCON) register contains flag bits to differentiate between a:

- Power-on Reset ($\overline{POR}$)
- Brown-out Reset ($\overline{BOR}$)
- Reset Instruction Reset ($\overline{RI}$)
- Stack Overflow Reset (STKOVF)
- Stack Underflow Reset (STKUNF)
- $\overline{MCLR}$ Reset ($\overline{RMCLR}$)

The PCON register bits are shown in Register 7-2.

REGISTER 7-2: PCON: POWER CONTROL REGISTER

R/W/HS-0/q	R/W/HS-0/q	U-0	U-0	R/W/HC-1/q	R/W/HC-1/q	R/W/HC-q/u	R/W/HC-q/u
STKOVF	STKUNF	—	—	$\overline{RMCLR}$	$\overline{RI}$	$\overline{POR}$	$\overline{BOR}$
bit 7							bit 0

Legend:		
HC = Bit is cleared by hardware		HS = Bit is set by hardware
R = Readable bit	W = Writable bit	U = Unimplemented bit, read as '0'
u = Bit is unchanged	x = Bit is unknown	-m/n = Value at POR and BOR/Value at all other Resets
'1' = Bit is set	'0' = Bit is cleared	q = Value depends on condition

bit 7 **STKOVF:** Stack Overflow Flag bit
1 = A Stack Overflow occurred
0 = A Stack Overflow has not occurred or set to '0' by firmware

bit 6 **STKUNF:** Stack Underflow Flag bit
1 = A Stack Underflow occurred
0 = A Stack Underflow has not occurred or set to '0' by firmware

bit 5-4 **Unimplemented:** Read as '0'

bit 3 **$\overline{RMCLR}$:** $\overline{MCLR}$ Reset Flag bit
1 = A $\overline{MCLR}$ Reset has not occurred or set to '1' by firmware
0 = A $\overline{MCLR}$ Reset has occurred (set to '0' in hardware when a $\overline{MCLR}$ Reset occurs)

bit 2 **$\overline{RI}$:** RESET Instruction Flag bit
1 = A RESET instruction has not been executed or set to '1' by firmware
0 = A RESET instruction has been executed (set to '0' in hardware upon executing a RESET instruction)

bit 1 **$\overline{POR}$:** Power-on Reset Status bit
1 = No Power-on Reset occurred
0 = A Power-on Reset occurred (must be set in software after a Power-on Reset occurs)

bit 0 **$\overline{BOR}$:** Brown-out Reset Status bit
1 = No Brown-out Reset occurred
0 = A Brown-out Reset occurred (must be set in software after a Power-on Reset or Brown-out Reset occurs)

TABLE 7-5: SUMMARY OF REGISTERS ASSOCIATED WITH RESETS

Name	Bit 7	Bit 6	Bit 5	Bit 4	Bit 3	Bit 2	Bit 1	Bit 0	Register on Page
BORCON	SBOREN	—	—	—	—	—	—	BORRDY	77
PCON	STKOVF	STKUNF	—	—	$\overline{\text{RMCLR}}$	$\overline{\text{RI}}$	$\overline{\text{POR}}$	$\overline{\text{BOR}}$	81
STATUS	—	—	—	$\overline{\text{TO}}$	$\overline{\text{PD}}$	Z	DC	C	22
WDTCON	—	—	WDTPS<4:0>					SWDTEN	101

Legend: — = unimplemented bit, reads as '0'. Shaded cells are not used by Resets.

© 2010-2015 Microchip Technology Inc.

8.0 INTERRUPTS

The interrupt feature allows certain events to preempt normal program flow. Firmware is used to determine the source of the interrupt and act accordingly. Some interrupts can be configured to wake the MCU from Sleep mode.

This chapter contains the following information for Interrupts:

- Operation
- Interrupt Latency
- Interrupts During Sleep
- INT Pin
- Automatic Context Saving

Many peripherals produce interrupts. Refer to the corresponding chapters for details.

A block diagram of the interrupt logic is shown in Figure 8-1 and Figure 8-2.

FIGURE 8-1: INTERRUPT LOGIC

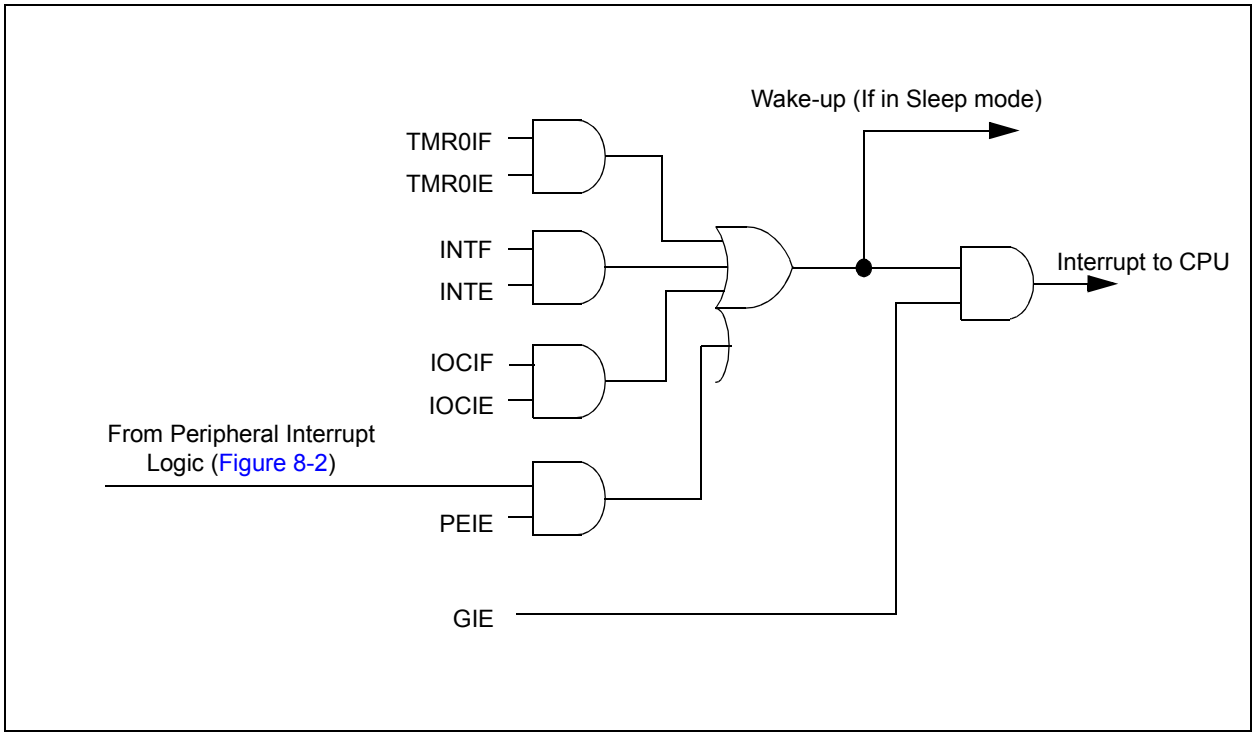

FIGURE 8-2: PERIPHERAL INTERRUPT LOGIC

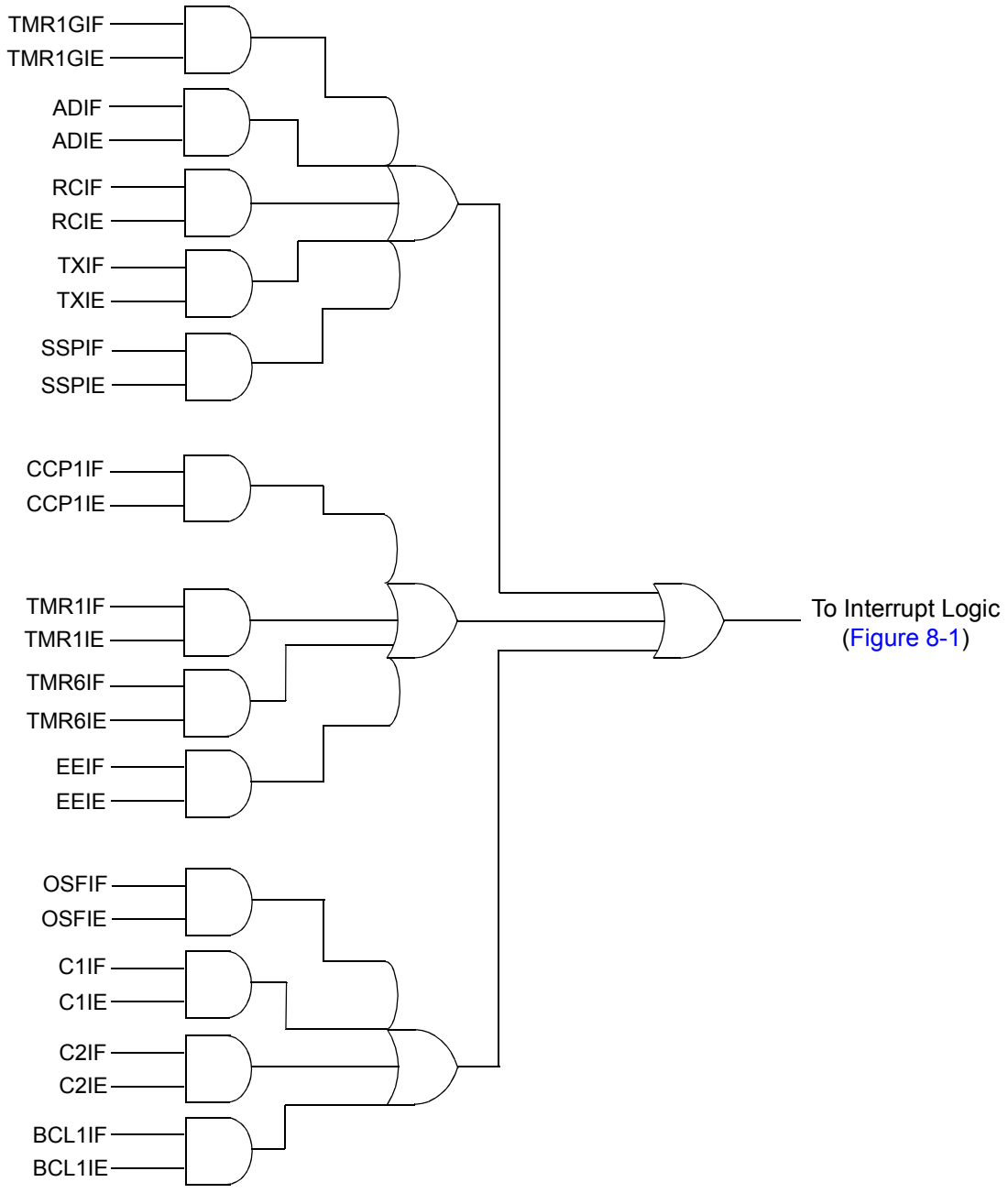

Note 1: PIC16(L)F1828 only.

© 2010-2015 Microchip Technology Inc.

8.1 Operation

Interrupts are disabled upon any device Reset. They are enabled by setting the following bits:

- GIE bit of the INTCON register
- Interrupt Enable bit(s) for the specific interrupt event(s)
- PEIE bit of the INTCON register (if the Interrupt Enable bit of the interrupt event is contained in the PIEx register)

The INTCON, PIR1, PIR2 and PIR3 registers record individual interrupts via interrupt flag bits. Interrupt flag bits will be set, regardless of the status of the GIE, PEIE and individual interrupt enable bits.

The following events happen when an interrupt event occurs while the GIE bit is set:

- Current prefetched instruction is flushed
- GIE bit is cleared
- Current Program Counter (PC) is pushed onto the stack
- Critical registers are automatically saved to the shadow registers (See **Section 8.5 "Automatic Context Saving"**)
- PC is loaded with the interrupt vector 0004h

The firmware within the Interrupt Service Routine (ISR) should determine the source of the interrupt by polling the interrupt flag bits. The interrupt flag bits must be cleared before exiting the ISR to avoid repeated interrupts. Because the GIE bit is cleared, any interrupt that occurs while executing the ISR will be recorded through its interrupt flag, but will not cause the processor to redirect to the interrupt vector.

The `RETFIE` instruction exits the ISR by popping the previous address from the stack, restoring the saved context from the shadow registers and setting the GIE bit.

For additional information on a specific interrupt's operation, refer to its peripheral chapter.

Note 1:	Individual interrupt flag bits are set, regardless of the state of any other enable bits.
2:	All interrupts will be ignored while the GIE bit is cleared. Any interrupt occurring while the GIE bit is clear will be serviced when the GIE bit is set again.

8.2 Interrupt Latency

Interrupt latency is defined as the time from when the interrupt event occurs to the time code execution at the interrupt vector begins. The latency for synchronous interrupts is three or four instruction cycles. For asynchronous interrupts, the latency is three to five instruction cycles, depending on when the interrupt occurs. See Figure 8-3 and Figure 8-4 for more details.

FIGURE 8-3: INTERRUPT LATENCY

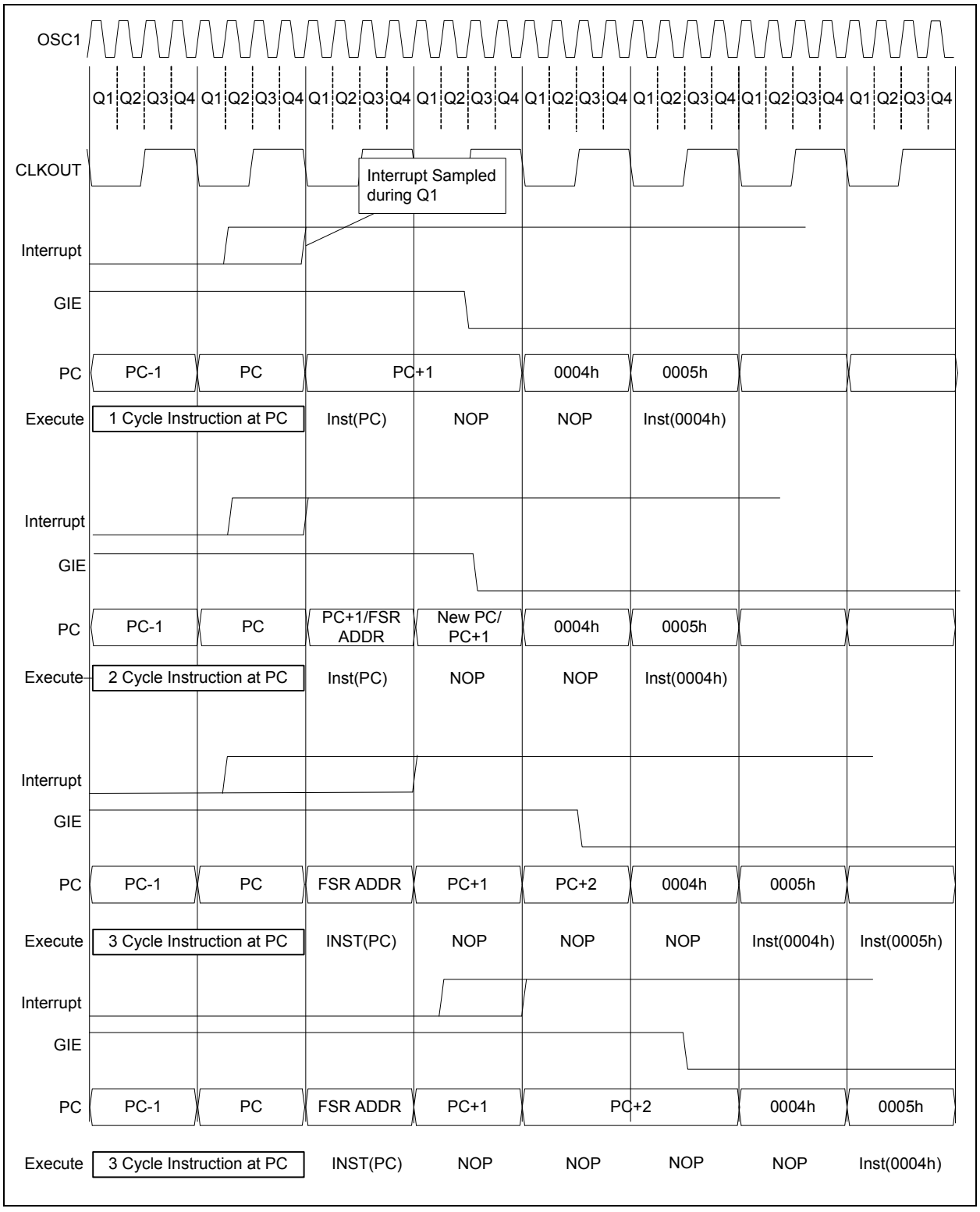

© 2010-2015 Microchip Technology Inc.

FIGURE 8-4: INT PIN INTERRUPT TIMING

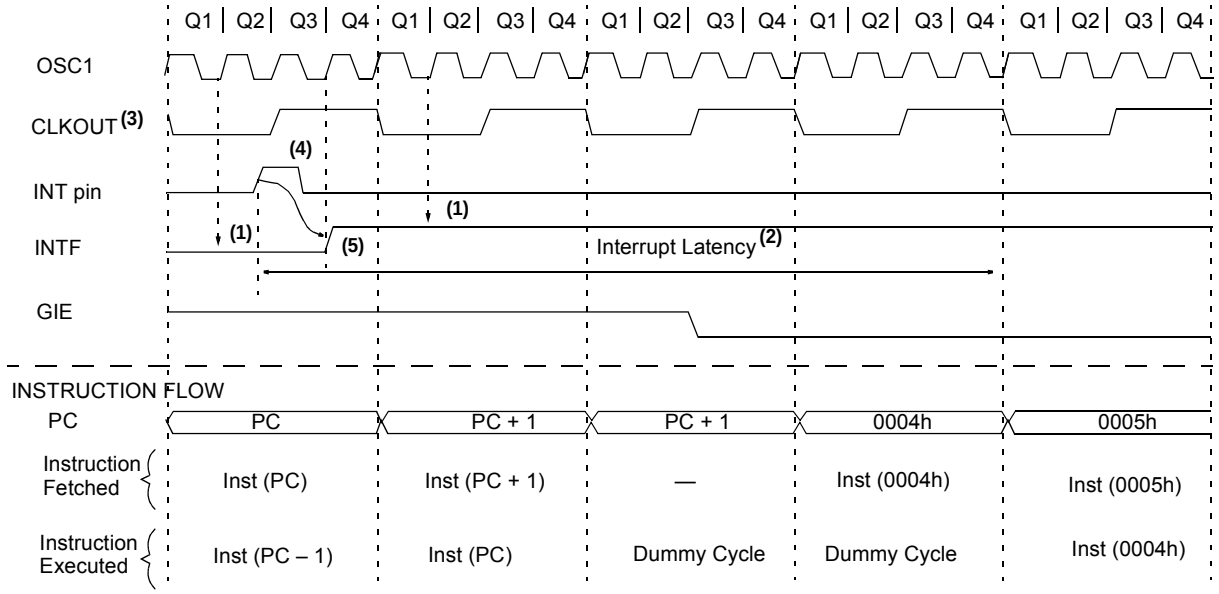

Note 1: INTF flag is sampled here (every Q1).

2: Asynchronous interrupt latency = 3-5 TCY. Synchronous latency = 3-4 TCY, where TCY = instruction cycle time. Latency is the same whether Inst (PC) is a single cycle or a 2-cycle instruction.

3: CLKOUT is not available in all oscillator modes.

4: For minimum width of INT pulse, refer to the AC specifications in **Section 30.0 "Electrical Specifications"**.

5: INTF is enabled to be set any time during the Q4-Q1 cycles.

8.3 Interrupts During Sleep

Some interrupts can be used to wake from Sleep. To wake from Sleep, the peripheral must be able to operate without the system clock. The interrupt source must have the appropriate Interrupt Enable bit(s) set prior to entering Sleep.

On waking from Sleep, if the GIE bit is also set, the processor will branch to the interrupt vector. Otherwise, the processor will continue executing instructions after the SLEEP instruction. The instruction directly after the SLEEP instruction will always be executed before branching to the ISR. Refer to the **Section 9.0 "Power-Down Mode (Sleep)"** for more details.

8.4 INT Pin

The INT pin can be used to generate an asynchronous edge-triggered interrupt. This interrupt is enabled by setting the INTE bit of the INTCON register. The INTEDG bit of the OPTION_REG register determines on which edge the interrupt will occur. When the INTEDG bit is set, the rising edge will cause the interrupt. When the INTEDG bit is clear, the falling edge will cause the interrupt. The INTF bit of the INTCON register will be set when a valid edge appears on the INT pin. If the GIE and INTE bits are also set, the processor will redirect program execution to the interrupt vector.

8.5 Automatic Context Saving

Upon entering an interrupt, the return PC address is saved on the stack. Additionally, the following registers are automatically saved in the Shadow registers:

- W register
- STATUS register (except for $\overline{TO}$ and $\overline{PD}$)
- BSR register
- FSR registers
- PCLATH register

Upon exiting the Interrupt Service Routine, these registers are automatically restored. Any modifications to these registers during the ISR will be lost. If modifications to any of these registers are desired, the corresponding Shadow register should be modified and the value will be restored when exiting the ISR. The Shadow registers are available in Bank 31 and are readable and writable. Depending on the user's application, other registers may also need to be saved.

© 2010-2015 Microchip Technology Inc.

8.5.1 INTCON REGISTER

The INTCON register is a readable and writable register, which contains the various enable and flag bits for TMR0 register overflow, interrupt-on-change and external INT pin interrupts.

Note: Interrupt flag bits are set when an interrupt condition occurs, regardless of the state of its corresponding enable bit or the Global Interrupt Enable bit, GIE, of the INTCON register. User software should ensure the appropriate interrupt flag bits are clear prior to enabling an interrupt.

REGISTER 8-1: INTCON: INTERRUPT CONTROL REGISTER

R/W-0/0	R/W-0/0	R/W-0/0	R/W-0/0	R/W-0/0	R/W-0/0	R/W-0/0	R-0/0
GIE	PEIE	TMR0IE	INTE	IOCIE	TMR0IF	INTF	IOCIF(1)
bit 7							bit 0

Legend:		
R = Readable bit	W = Writable bit	U = Unimplemented bit, read as '0'
u = Bit is unchanged	x = Bit is unknown	-n/n = Value at POR and BOR/Value at all other Resets
'1' = Bit is set	'0' = Bit is cleared	

bit 7 **GIE:** Global Interrupt Enable bit
1 = Enables all active interrupts
0 = Disables all interrupts

bit 6 **PEIE:** Peripheral Interrupt Enable bit
1 = Enables all active peripheral interrupts
0 = Disables all peripheral interrupts

bit 5 **TMR0IE:** Timer0 Overflow Interrupt Enable bit
1 = Enables the Timer0 interrupt
0 = Disables the Timer0 interrupt

bit 4 **INTE:** INT External Interrupt Enable bit
1 = Enables the INT external interrupt
0 = Disables the INT external interrupt

bit 3 **IOCIE:** Interrupt-on-Change Enable bit
1 = Enables the interrupt-on-change
0 = Disables the interrupt-on-change

bit 2 **TMR0IF:** Timer0 Overflow Interrupt Flag bit
1 = TMR0 register has overflowed
0 = TMR0 register did not overflow

bit 1 **INTF:** INT External Interrupt Flag bit
1 = The INT external interrupt occurred
0 = The INT external interrupt did not occur

bit 0 **IOCIF:** Interrupt-on-Change Interrupt Flag bit(1)
1 = When at least one of the interrupt-on-change pins changed state
0 = None of the interrupt-on-change pins have changed state

Note 1: The IOCIF Flag bit is read-only and cleared when all the Interrupt-on-Change flags in the IOCxF register have been cleared by software.

8.5.2 PIE1 REGISTER

The PIE1 register contains the interrupt enable bits, as shown in Register 8-2.

Note: Bit PEIE of the INTCON register must be set to enable any peripheral interrupt.

REGISTER 8-2: PIE1: PERIPHERAL INTERRUPT ENABLE REGISTER 1

R/W-0/0	R/W-0/0	R/W-0/0	R/W-0/0	R/W-0/0	R/W-0/0	R/W-0/0	R/W-0/0
TMR1GIE	ADIE	RCIE	TXIE	SSP1IE	CCP1IE	TMR2IE	TMR1IE
bit 7							bit 0

Legend:		
R = Readable bit	W = Writable bit	U = Unimplemented bit, read as ‘0’
u = Bit is unchanged	x = Bit is unknown	-n/n = Value at POR and BOR/Value at all other Resets
‘1’ = Bit is set	‘0’ = Bit is cleared	

bit 7 **TMR1GIE:** Timer1 Gate Interrupt Enable bit
1 = Enables the Timer1 Gate Acquisition interrupt
0 = Disables the Timer1 Gate Acquisition interrupt

bit 6 **ADIE:** A/D Converter (ADC) Interrupt Enable bit
1 = Enables the ADC interrupt
0 = Disables the ADC interrupt

bit 5 **RCIE:** USART Receive Interrupt Enable bit
1 = Enables the USART receive interrupt
0 = Disables the USART receive interrupt

bit 4 **TXIE:** USART Transmit Interrupt Enable bit
1 = Enables the USART transmit interrupt
0 = Disables the USART transmit interrupt

bit 3 **SSP1IE:** Synchronous Serial Port (MSSP) Interrupt Enable bit
1 = Enables the MSSP interrupt
0 = Disables the MSSP interrupt

bit 2 **CCP1IE:** CCP1 Interrupt Enable bit
1 = Enables the CCP1 interrupt
0 = Disables the CCP1 interrupt

bit 1 **TMR2IE:** TMR2 to PR2 Match Interrupt Enable bit
1 = Enables the Timer2 to PR2 match interrupt
0 = Disables the Timer2 to PR2 match interrupt

bit 0 **TMR1IE:** Timer1 Overflow Interrupt Enable bit
1 = Enables the Timer1 overflow interrupt
0 = Disables the Timer1 overflow interrupt

© 2010-2015 Microchip Technology Inc.

8.5.3 PIE2 REGISTER

The PIE2 register contains the interrupt enable bits, as shown in Register 8-3.

Note: Bit PEIE of the INTCON register must be set to enable any peripheral interrupt.

REGISTER 8-3: PIE2: PERIPHERAL INTERRUPT ENABLE REGISTER 2

R/W-0/0	R/W-0/0	R/W-0/0	R/W-0/0	R/W-0/0	U-0	U-0	R/W-0/0
OSFIE	C2IE	C1IE	EEIE	BCL1IE	—	—	CCP2IE
bit 7							bit 0

Legend:		
R = Readable bit	W = Writable bit	U = Unimplemented bit, read as ‘0’
u = Bit is unchanged	x = Bit is unknown	-n/n = Value at POR and BOR/Value at all other Resets
‘1’ = Bit is set	‘0’ = Bit is cleared	

bit 7 **OSFIE:** Oscillator Fail Interrupt Enable bit
1 = Enables the Oscillator Fail interrupt
0 = Disables the Oscillator Fail interrupt

bit 6 **C2IE:** Comparator C2 Interrupt Enable bit
1 = Enables the Comparator C2 interrupt
0 = Disables the Comparator C2 interrupt

bit 5 **C1IE:** Comparator C1 Interrupt Enable bit
1 = Enables the Comparator C1 interrupt
0 = Disables the Comparator C1 interrupt

bit 4 **EEIE:** EEPROM Write Completion Interrupt Enable bit
1 = Enables the EEPROM Write Completion interrupt
0 = Disables the EEPROM Write Completion interrupt

bit 3 **BCL1IE:** MSSP Bus Collision Interrupt Enable bit
1 = Enables the MSSP Bus Collision Interrupt
0 = Disables the MSSP Bus Collision Interrupt

bit 2-1 **Unimplemented:** Read as ‘0’

bit 0 **CCP2IE:** CCP2 Interrupt Enable bit
1 = Enables the CCP2 Interrupt
0 = Disables the CCP2 Interrupt

© 2010-2015 Microchip Technology Inc.

8.5.4 PIE3 REGISTER

The PIE3 register contains the interrupt enable bits, as shown in Register 8-4.

Note 1: Bit PEIE of the INTCON register must be set to enable any peripheral interrupt.

REGISTER 8-4: PIE3: PERIPHERAL INTERRUPT ENABLE REGISTER 3

U-0	U-0	R/W-0/0	R/W-0/0	R/W-0/0	U-0	R/W-0/0	U-0
—	—	CCP4IE	CCP3IE	TMR6IE	—	TMR4IE	—
bit 7							bit 0

Legend:		
R = Readable bit	W = Writable bit	U = Unimplemented bit, read as '0'
u = Bit is unchanged	x = Bit is unknown	-n/n = Value at POR and BOR/Value at all other Resets
'1' = Bit is set	'0' = Bit is cleared	

bit 7-6 **Unimplemented:** Read as '0'

bit 5 **CCP4IE:** CCP4 Interrupt Enable bit
- 1 = Enables the CCP4 interrupt
- 0 = Disables the CCP4 interrupt

bit 4 **CCP3IE:** CCP3 Interrupt Enable bit
- 1 = Enables the CCP3 interrupt
- 0 = Disables the CCP3 interrupt

bit 3 **TMR6IE:** TMR6 to PR6 Match Interrupt Enable bit
- 1 = Enables the TMR6 to PR6 Match interrupt
- 0 = Disables the TMR6 to PR6 Match interrupt

bit 2 **Unimplemented:** Read as '0'

bit 1 **TMR4IE:** TMR4 to PR4 Match Interrupt Enable bit
- 1 = Enables the TMR4 to PR4 Match interrupt
- 0 = Disables the TMR4 to PR4 Match interrupt

bit 0 **Unimplemented:** Read as '0'

© 2010-2015 Microchip Technology Inc.

8.5.5 PIR1 REGISTER

The PIR1 register contains the interrupt flag bits, as shown in Register 8-5.

Note: Interrupt flag bits are set when an interrupt condition occurs, regardless of the state of its corresponding enable bit or the Global Interrupt Enable bit, GIE, of the INTCON register. User software should ensure the appropriate interrupt flag bits are clear prior to enabling an interrupt.

REGISTER 8-5: PIR1: PERIPHERAL INTERRUPT REQUEST REGISTER 1

R/W-0/0	R/W-0/0	R-0/0	R-0/0	R/W-0/0	R/W-0/0	R/W-0/0	R/W-0/0
TMR1GIF	ADIF	RCIF	TXIF	SSP1IF	CCP1IF	TMR2IF	TMR1IF
bit 7							bit 0

Legend:		
R = Readable bit	W = Writable bit	U = Unimplemented bit, read as ‘0’
u = Bit is unchanged	x = Bit is unknown	-n/n = Value at POR and BOR/Value at all other Resets
‘1’ = Bit is set	‘0’ = Bit is cleared	

bit 7 **TMR1GIF:** Timer1 Gate Interrupt Flag bit
1 = Interrupt is pending
0 = Interrupt is not pending

bit 6 **ADIF:** A/D Converter Interrupt Flag bit
1 = Interrupt is pending
0 = Interrupt is not pending

bit 5 **RCIF:** USART Receive Interrupt Flag bit
1 = Interrupt is pending
0 = Interrupt is not pending

bit 4 **TXIF:** USART Transmit Interrupt Flag bit
1 = Interrupt is pending
0 = Interrupt is not pending

bit 3 **SSP1IF:** Synchronous Serial Port (MSSP) Interrupt Flag bit
1 = Interrupt is pending
0 = Interrupt is not pending

bit 2 **CCP1IF:** CCP1 Interrupt Flag bit
1 = Interrupt is pending
0 = Interrupt is not pending

bit 1 **TMR2IF:** Timer2 to PR2 Interrupt Flag bit
1 = Interrupt is pending
0 = Interrupt is not pending

bit 0 **TMR1IF:** Timer1 Overflow Interrupt Flag bit
1 = Interrupt is pending
0 = Interrupt is not pending

© 2010-2015 Microchip Technology Inc.

8.5.6 PIR2 REGISTER

The PIR2 register contains the interrupt flag bits, as shown in Register 8-6.

Note: Interrupt flag bits are set when an interrupt condition occurs, regardless of the state of its corresponding enable bit or the Global Interrupt Enable bit, GIE, of the INTCON register. User software should ensure the appropriate interrupt flag bits are clear prior to enabling an interrupt.

REGISTER 8-6: PIR2: PERIPHERAL INTERRUPT REQUEST REGISTER 2

R/W-0/0	R/W-0/0	R/W-0/0	R/W-0/0	R/W-0/0	U-0	U-0	U-0
OSFIF	C2IF	C1IF	EEIF	BCL1IF	—	—	CCP2IF
bit 7							bit 0

Legend:		
R = Readable bit	W = Writable bit	U = Unimplemented bit, read as ‘0’
u = Bit is unchanged	x = Bit is unknown	-n/n = Value at POR and BOR/Value at all other Resets
‘1’ = Bit is set	‘0’ = Bit is cleared	

bit 7 **OSFIF:** Oscillator Fail Interrupt Flag bit
1 = Interrupt is pending
0 = Interrupt is not pending

bit 6 **C2IF:** Comparator C2 Interrupt Flag bit
1 = Interrupt is pending
0 = Interrupt is not pending

bit 5 **C1IF:** Comparator C1 Interrupt Flag bit
1 = Interrupt is pending
0 = Interrupt is not pending

bit 4 **EEIF:** EEPROM Write Completion Interrupt Flag bit
1 = Interrupt is pending
0 = Interrupt is not pending

bit 3 **BCL1IF:** MSSP Bus Collision Interrupt Flag bit
1 = Interrupt is pending
0 = Interrupt is not pending

bit 2-1 **Unimplemented:** Read as ‘0’

bit 0 **CCP2IF:** CCP2 Interrupt Flag bit
1 = Interrupt is pending
0 = Interrupt is not pending

© 2010-2015 Microchip Technology Inc.

8.5.7 PIR3 REGISTER

The PIR3 register contains the interrupt flag bits, as shown in Register 8-7.

Note 1: Interrupt flag bits are set when an interrupt condition occurs, regardless of the state of its corresponding enable bit or the Global Interrupt Enable bit, GIE, of the INTCON register. User software should ensure the appropriate interrupt flag bits are clear prior to enabling an interrupt.

REGISTER 8-7: PIR3: PERIPHERAL INTERRUPT REQUEST REGISTER 3

U-0	U-0	R/W-0/0	R/W-0/0	R/W-0/0	U-0	R/W-0/0	U-0
—	—	CCP4IF	CCP3IF	TMR6IF	—	TMR4IF	—
bit 7							bit 0

Legend:		
R = Readable bit	W = Writable bit	U = Unimplemented bit, read as ‘0’
u = Bit is unchanged	x = Bit is unknown	-n/n = Value at POR and BOR/Value at all other Resets
‘1’ = Bit is set	‘0’ = Bit is cleared	

bit 7-6 **Unimplemented:** Read as ‘0’

bit 5 **CCP4IF:** CCP4 Interrupt Flag bit
1 = Interrupt is pending
0 = Interrupt is not pending

bit 4 **CCP3IF:** CCP3 Interrupt Flag bit
1 = Interrupt is pending
0 = Interrupt is not pending

bit 3 **TMR6IF:** TMR6 to PR6 Match Interrupt Flag bit
1 = Interrupt is pending
0 = Interrupt is not pending

bit 2 **Unimplemented:** Read as ‘0’

bit 1 **TMR4IF:** TMR4 to PR4 Match Interrupt Flag bit
1 = Interrupt is pending
0 = Interrupt is not pending

bit 0 **Unimplemented:** Read as ‘0’

TABLE 8-1: SUMMARY OF REGISTERS ASSOCIATED WITH INTERRUPTS

Name	Bit 7	Bit 6	Bit 5	Bit 4	Bit 3	Bit 2	Bit 1	Bit 0	Register on Page
INTCON	GIE	PEIE	TMR0IE	INTE	IOCIE	TMR0IF	INTF	IOCIF	89
OPTION_REG	$\overline{\text{WPUEN}}$	INTEDG	TMR0CS	TMR0SE	PSA	PS2	PS1	PS0	176
PIE1	TMR1GIE	ADIE	RCIE	TXIE	SSP1IE	CCP1IE	TMR2IE	TMR1IE	90
PIE2	OSFIE	C2IE	C1IE	EEIE	BCL1IE	—	—	CCP2IE	91
PIE3	—	—	CCP4IE	CCP3IE	TMR6IE	—	TMR4IE	—	92
PIR1	TMR1GIF	ADIF	RCIF	TXIF	SSP1IF	CCP1IF	TMR2IF	TMR1IF	93
PIR2	OSFIF	C2IF	C1IF	EEIF	BCL1IF	—	—	CCP2IF	94
PIR3	—	—	CCP4IF	CCP3IF	TMR6IF	—	TMR4IF	—	95

Legend: — = unimplemented locations, read as '0'. Shaded cells are not used by interrupts.

© 2010-2015 Microchip Technology Inc.

9.0 POWER-DOWN MODE (SLEEP)

The Power-Down mode is entered by executing a SLEEP instruction.

Upon entering Sleep mode, the following conditions exist:

1. WDT will be cleared but keeps running, if enabled for operation during Sleep.
2. $\overline{PD}$ bit of the STATUS register is cleared.
3. $\overline{TO}$ bit of the STATUS register is set.
4. CPU clock is disabled.
5. 31 kHz LFINTOSC is unaffected and peripherals that operate from it may continue operation in Sleep.
6. Timer1 oscillator is unaffected and peripherals that operate from it may continue operation in Sleep.
7. ADC is unaffected, if the dedicated FRC clock is selected.
8. Capacitive Sensing oscillator is unaffected.
9. I/O ports maintain the status they had before SLEEP was executed (driving high, low or high-impedance).
10. Resets other than WDT are not affected by Sleep mode.

Refer to individual chapters for more details on peripheral operation during Sleep.

To minimize current consumption, the following conditions should be considered:

- I/O pins should not be floating
- External circuitry sinking current from I/O pins
- Internal circuitry sourcing current from I/O pins
- Current draw from pins with internal weak pull-ups
- Modules using 31 kHz LFINTOSC
- Modules using Timer1 oscillator

I/O pins that are high-impedance inputs should be pulled to VDD or VSS externally to avoid switching currents caused by floating inputs.

Examples of internal circuitry that might be sourcing current include modules such as the DAC and FVR modules. See **Section 17.0 "Digital-to-Analog Converter (DAC) Module"** and **Section 14.0 "Fixed Voltage Reference (FVR)"** for more information on these modules.

9.1 Wake-up from Sleep

The device can wake-up from Sleep through one of the following events:

1. External Reset input on $\overline{MCLR}$ pin, if enabled
2. BOR Reset, if enabled
3. POR Reset
4. Watchdog Timer, if enabled
5. Any external interrupt
6. Interrupts by peripherals capable of running during Sleep (see individual peripheral for more information)

The first three events will cause a device Reset. The last three events are considered a continuation of program execution. To determine whether a device Reset or wake-up event occurred, refer to **Section 7.10 "Determining the Cause of a Reset"**.

When the SLEEP instruction is being executed, the next instruction (PC + 1) is prefetched. For the device to wake-up through an interrupt event, the corresponding interrupt enable bit must be enabled. Wake-up will occur regardless of the state of the GIE bit. If the GIE bit is disabled, the device continues execution at the instruction after the SLEEP instruction. If the GIE bit is enabled, the device executes the instruction after the SLEEP instruction, the device will call the Interrupt Service Routine. In cases where the execution of the instruction following SLEEP is not desirable, the user should have a NOP after the SLEEP instruction.

The WDT is cleared when the device wakes up from Sleep, regardless of the source of wake-up.

9.1.1 WAKE-UP USING INTERRUPTS

When global interrupts are disabled (GIE cleared) and any interrupt source has both its interrupt enable bit and interrupt flag bit set, one of the following will occur:

- If the interrupt occurs **before** the execution of a SLEEP instruction
  - SLEEP instruction will execute as a NOP
  - WDT and WDT prescaler will not be cleared
  - $\overline{TO}$ bit of the STATUS register will not be set
  - $\overline{PD}$ bit of the STATUS register will not be cleared
- If the interrupt occurs **during or after** the execution of a SLEEP instruction
  - SLEEP instruction will be completely executed
  - Device will immediately wake-up from Sleep
  - WDT and WDT prescaler will be cleared
  - $\overline{TO}$ bit of the STATUS register will be set
  - $\overline{PD}$ bit of the STATUS register will be cleared

© 2010-2015 Microchip Technology Inc.

Even if the flag bits were checked before executing a SLEEP instruction, it may be possible for flag bits to become set before the SLEEP instruction completes. To determine whether a SLEEP instruction executed, test the $\overline{PD}$ bit. If the $\overline{PD}$ bit is set, the SLEEP instruction was executed as a NOP.

FIGURE 9-1: WAKE-UP FROM SLEEP THROUGH INTERRUPT

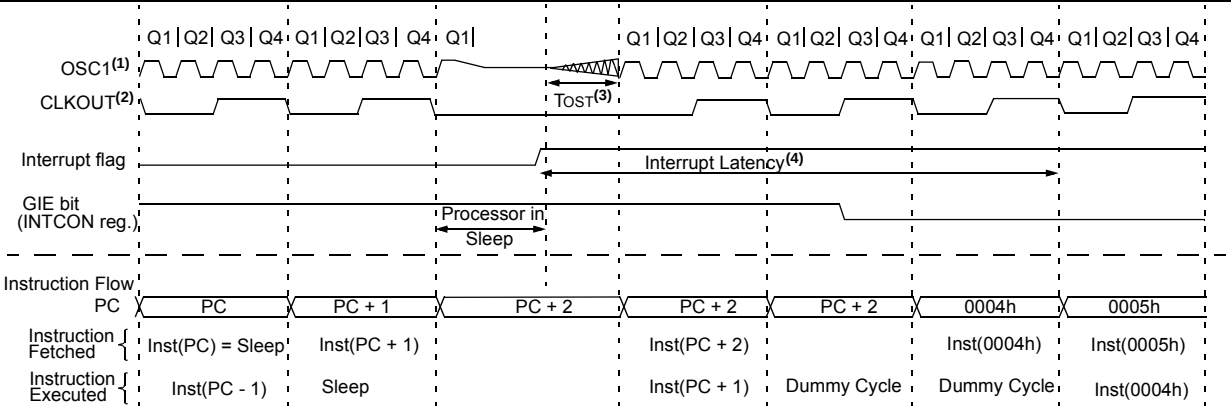

Note 1: XT, HS or LP Oscillator mode assumed.
2: CLKOUT is not available in XT, HS, or LP Oscillator modes, but shown here for timing reference.
3: TOST = 1024 TOSC (drawing not to scale). This delay applies only to XT, HS or LP Oscillator modes.
4: GIE = 1 assumed. In this case after wake-up, the processor calls the ISR at 0004h. If GIE = 0, execution will continue in-line.

TABLE 9-1: SUMMARY OF REGISTERS ASSOCIATED WITH POWER-DOWN MODE

Name	Bit 7	Bit 6	Bit 5	Bit 4	Bit 3	Bit 2	Bit 1	Bit 0	Register on Page
INTCON	GIE	PEIE	TMR0IE	INTE	IOCIE	TMR0IF	INTF	IOCIF	89
IOCAF	—	—	IOCAF5	IOCAF4	IOCAF3	IOCAF2	IOCAF1	IOCAF0	137
IOCAN	—	—	IOCAN5	IOCAN4	IOCAN3	IOCAN2	IOCAN1	IOCAN0	137
IOCAP	—	—	IOCAP5	IOCAP4	IOCAP3	IOCAP2	IOCAP1	IOCAP0	137
IOCBF(1)	IOCBF7	IOCBF6	IOCBF5	IOCBF4	—	—	—	—	139
IOCBN(1)	IOCBN7	IOCBN6	IOCBN5	IOCBN4	—	—	—	—	138
IOCBP(1)	IOCBP7	IOCBP6	IOCBP5	IOCBP4	—	—	—	—	138
PIE1	TMR1GIE	ADIE	RCIE	TXIE	SSP1IE	CCP1IE	TMR2IE	TMR1IE	90
PIE2	OSFIE	C2IE	C1IE	EEIE	BCL1IE	—	—	CCP2IE	91
PIR1	TMR1GIF	ADIF	RCIF	TXIF	SSP1IF	CCP1IF	TMR2IF	TMR1IF	93
PIR2	OSFIF	C2IF	C1IF	EEIF	BCL1IF	—	—	CCP2IF	94
STATUS	—	—	—	$\overline{TO}$	$\overline{PD}$	Z	DC	C	22
WDTCON	—	—	WDTPS4	WDTPS3	WDTPS2	WDTPS1	WDTPS0	SWDTEN	101

Legend: — = unimplemented, read as '0'. Shaded cells are not used in Power-Down mode.
Note 1: PIC16(L)F1828 only.

© 2010-2015 Microchip Technology Inc.

10.0 WATCHDOG TIMER

The Watchdog Timer is a system timer that generates a Reset if the firmware does not issue a CLRWDT instruction within the time-out period. The Watchdog Timer is typically used to recover the system from unexpected events.

The WDT has the following features:

- Independent clock source
- Multiple operating modes
  - WDT is always on
  - WDT is off when in Sleep
  - WDT is controlled by software
  - WDT is always off
- Configurable time-out period is from 1ms to 256 seconds (typical)
- Multiple Reset conditions
- Operation during Sleep

FIGURE 10-1: WATCHDOG TIMER BLOCK DIAGRAM

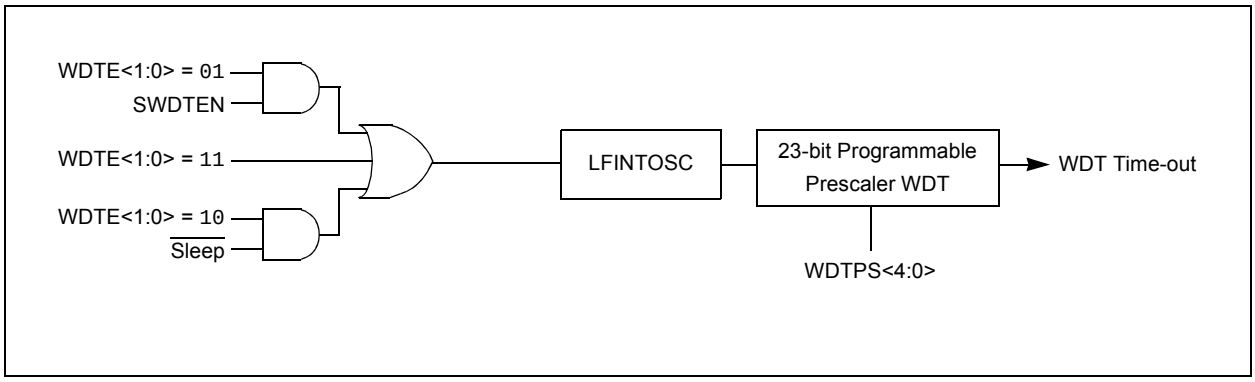

10.1 Independent Clock Source

The WDT derives its time base from the 31 kHz LFINTOSC internal oscillator.

10.2 WDT Operating Modes

The Watchdog Timer module has four operating modes controlled by the WDTE<1:0> bits in Configuration Word 1. See Table 10-1.

10.2.1 WDT IS ALWAYS ON

When the WDTE bits of Configuration Word 1 are set to '11', the WDT is always on.

WDT protection is active during Sleep.

10.2.2 WDT IS OFF IN SLEEP

When the WDTE bits of Configuration Word 1 are set to '10', the WDT is on, except in Sleep.

WDT protection is not active during Sleep.

10.2.3 WDT CONTROLLED BY SOFTWARE

When the WDTE bits of Configuration Word 1 are set to '01', the WDT is controlled by the SWDTEN bit of the WDTCON register.

WDT protection is unchanged by Sleep. See Table 10-1 for more details.

TABLE 10-1: WDT OPERATING MODES

WDTE Config bits	SWDTEN	Device Mode	WDT Mode
WDT_ON (11)	X	X	Active
WDT_NSLEEP (10)	X	Awake	Active
WDT_NSLEEP (10)	X	Sleep	Disabled
WDT_SWDTEN (01)	1	X	Active
WDT_SWDTEN (01)	0	X	Disabled
WDT_OFF (00)	X	X	Disabled

10.3 Time-Out Period

The WDTPS bits of the WDTCON register set the time-out period from 1ms to 256 seconds. After a Reset, the default time-out period is two seconds.

10.4 Clearing the WDT

The WDT is cleared when any of the following conditions occur:

- Any Reset
- CLRWDT instruction is executed
- Device enters Sleep
- Device wakes up from Sleep
- Oscillator fail event
- WDT is disabled
- OST is running

See Table 10-2 for more information.

10.5 Operation During Sleep

When the device enters Sleep, the WDT is cleared. If the WDT is enabled during Sleep, the WDT resumes counting.

When the device exits Sleep, the WDT is cleared again. The WDT remains clear until the OST, if enabled, completes. See **Section 5.0 "Oscillator Module (With Fail-Safe Clock Monitor)"** for more information on the OST.

When a WDT time-out occurs while the device is in Sleep, no Reset is generated. Instead, the device wakes up and resumes operation. The $\overline{TO}$ and $\overline{PD}$ bits in the STATUS register are changed to indicate the event. See **Section 3.0 "Memory Organization"** and The STATUS register (Register 3-1) for more information.

TABLE 10-2: WDT CLEARING CONDITIONS

Conditions	WDT
WDTE<1:0> = 00	Cleared
WDTE<1:0> = 01 and SWDTEN = 0	
WDTE<1:0> = 10 and enter Sleep	
CLRWDT Command	
Oscillator Fail Detected	
Exit Sleep + System Clock = T1OSC, EXTRC, INTOSC, EXTCLK	
Exit Sleep + System Clock = XT, HS, LP	Cleared until the end of OST
Change INTOSC divider (IRCF bits)	Unaffected

© 2010-2015 Microchip Technology Inc.

REGISTER 10-1: WDTCON: WATCHDOG TIMER CONTROL REGISTER

U-0	U-0	R/W-0/0	R/W-1/1	R/W-0/0	R/W-1/1	R/W-1/1	R/W-0/0
—	—	WDTPS4	WDTPS3	WDTPS2	WDTPS1	WDTPS0	SWDTEN
bit 7							bit 0

Legend:		
R = Readable bit	W = Writable bit	U = Unimplemented bit, read as '0'
u = Bit is unchanged	x = Bit is unknown	-m/n = Value at POR and BOR/Value at all other Resets
'1' = Bit is set	'0' = Bit is cleared	

bit 7-6 **Unimplemented:** Read as '0'

bit 5-1 **WDTPS<4:0>:** Watchdog Timer Period Select bits

Bit Value = Prescale Rate

00000 = 1:32 (Interval 1 ms typ)
00001 = 1:64 (Interval 2 ms typ)
00010 = 1:128 (Interval 4 ms typ)
00011 = 1:256 (Interval 8 ms typ)
00100 = 1:512 (Interval 16 ms typ)
00101 = 1:1024 (Interval 32 ms typ)
00110 = 1:2048 (Interval 64 ms typ)
00111 = 1:4096 (Interval 128 ms typ)
01000 = 1:8192 (Interval 256 ms typ)
01001 = 1:16384 (Interval 512 ms typ)
01010 = 1:32768 (Interval 1s typ)
01011 = 1:65536 (Interval 2s typ) (Reset value)
01100 = 1:131072 (2^{17}) (Interval 4s typ)
01101 = 1:262144 (2^{18}) (Interval 8s typ)
01110 = 1:524288 (2^{19}) (Interval 16s typ)
01111 = 1:1048576 (2^{20}) (Interval 32s typ)
10000 = 1:2097152 (2^{21}) (Interval 64s typ)
10001 = 1:4194304 (2^{22}) (Interval 128s typ)
10010 = 1:8388608 (2^{23}) (Interval 256s typ)

10011 = Reserved. Results in minimum interval (1:32)
•
•
•
11111 = Reserved. Results in minimum interval (1:32)

bit 0 **SWDTEN:** Software Enable/Disable for Watchdog Timer bit

If WDTE<1:0> = 00:
This bit is ignored.
If WDTE<1:0> = 01:
1 = WDT is turned on
0 = WDT is turned off
If WDTE<1:0> = 1x:
This bit is ignored.

11.0 DATA EEPROM AND FLASH PROGRAM MEMORY CONTROL

The data EEPROM and Flash program memory are readable and writable during normal operation (full V_{DD} range). These memories are not directly mapped in the register file space. Instead, they are indirectly addressed through the Special Function Registers (SFRs). There are six SFRs used to access these memories:

- EECON1
- EECON2
- EEDATL
- EEDATH
- EEADRL
- EEADRH

When interfacing the data memory block, EEDATL holds the 8-bit data for read/write, and EEADRL holds the address of the EEDATL location being accessed. These devices have 256 bytes of data EEPROM with an address range from 0h to 0FFh.

When accessing the program memory block, the EEDATH:EEDATL register pair forms a 2-byte word that holds the 14-bit data for read/write, and the EEADRL and EEADRH registers form a 2-byte word that holds the 15-bit address of the program memory location being read.

The EEPROM data memory allows byte read and write. An EEPROM byte write automatically erases the location and writes the new data (erase before write).

The write time is controlled by an on-chip timer. The write/erase voltages are generated by an on-chip charge pump rated to operate over the voltage range of the device for byte or word operations.

Depending on the setting of the Flash Program Memory Self Write Enable bits WRT<1:0> of the Configuration Word 2, the device may or may not be able to write certain blocks of the program memory. However, reads from the program memory are always allowed.

When the device is code-protected, the device programmer can no longer access data or program memory. When code-protected, the CPU may continue to read and write the data EEPROM memory and Flash program memory.

11.1 EEADRL and EEADRH Registers

The EEADRH:EEADRL register pair can address up to a maximum of 256 bytes of data EEPROM or up to a maximum of 32K words of program memory.

When selecting a program address value, the MSB of the address is written to the EEADRH register and the LSB is written to the EEADRL register. When selecting a EEPROM address value, only the LSB of the address is written to the EEADRL register.

11.1.1 EECON1 AND EECON2 REGISTERS

EECON1 is the control register for EE memory accesses.

Control bit EEPGD determines if the access will be a program or data memory access. When clear, any subsequent operations will operate on the EEPROM memory. When set, any subsequent operations will operate on the program memory. On Reset, EEPROM is selected by default.

Control bits RD and WR initiate read and write, respectively. These bits cannot be cleared, only set, in software. They are cleared in hardware at completion of the read or write operation. The inability to clear the WR bit in software prevents the accidental, premature termination of a write operation.

The WREN bit, when set, will allow a write operation to occur. On power-up, the WREN bit is clear. The WRERR bit is set when a write operation is interrupted by a Reset during normal operation. In these situations, following Reset, the user can check the WRERR bit and execute the appropriate error handling routine.

Interrupt flag bit EEIF of the PIR2 register is set when the write is complete. It must be cleared in the software.

Reading EECON2 will read all ‘0’s. The EECON2 register is used exclusively in the data EEPROM write sequence. To enable writes, a specific pattern must be written to EECON2.

© 2010-2015 Microchip Technology Inc.

11.2 Using the Data EEPROM

The data EEPROM is a high-endurance, byte addressable array that has been optimized for the storage of frequently changing information (e.g., program variables or other data that are updated often). When variables in one section change frequently, while variables in another section do not change, it is possible to exceed the total number of write cycles to the EEPROM without exceeding the total number of write cycles to a single byte. Refer to **Section 30.0 "Electrical Specifications"**. If this is the case, then a refresh of the array must be performed. For this reason, variables that change infrequently (such as constants, IDs, calibration, etc.) should be stored in Flash program memory.

11.2.1 READING THE DATA EEPROM MEMORY

To read a data memory location, the user must write the address to the EEADRL register, clear the EEPGD and CFGS control bits of the EECON1 register, and then set control bit RD. The data is available at the very next cycle, in the EEDATL register; therefore, it can be read in the next instruction. EEDATL will hold this value until another read or until it is written to by the user (during a write operation).

EXAMPLE 11-1: DATA EEPROM READ

```
BANKSEL EEADRL       ;
MOVLW   DATA_EE_ADDR ;
MOVWF   EEADRL       ;Data Memory
                     ;Address to read
BCF     EECON1, CFGS ;Deselect Config space
BCF     EECON1, EEPGD;Point to DATA memory
BSF     EECON1, RD   ;EE Read
MOVF    EEDATL, W    ;W = EEDATL
```

Note:	Data EEPROM can be read regardless of the setting of the $\overline{\text{CPD}}$ bit.

11.2.2 WRITING TO THE DATA EEPROM MEMORY

To write an EEPROM data location, the user must first write the address to the EEADRL register and the data to the EEDATL register. Then the user must follow a specific sequence to initiate the write for each byte.

The write will not initiate if the above sequence is not followed exactly (write 55h to EECON2, write AAh to EECON2, then set WR bit) for each byte. Interrupts should be disabled during this code segment.

Additionally, the WREN bit in EECON1 must be set to enable write. This mechanism prevents accidental writes to data EEPROM due to errant (unexpected) code execution (i.e., lost programs). The user should keep the WREN bit clear at all times, except when updating EEPROM. The WREN bit is not cleared by hardware.

After a write sequence has been initiated, clearing the WREN bit will not affect this write cycle. The WR bit will be inhibited from being set unless the WREN bit is set.

At the completion of the write cycle, the WR bit is cleared in hardware and the EE Write Complete Interrupt Flag bit (EEIF) is set. The user can either enable this interrupt or poll this bit. EEIF must be cleared by software.

11.2.3 PROTECTION AGAINST SPURIOUS WRITE

There are conditions when the user may not want to write to the data EEPROM memory. To protect against spurious EEPROM writes, various mechanisms have been built-in. On power-up, WREN is cleared. Also, the Power-up Timer (64 ms duration) prevents EEPROM write.

The write initiate sequence and the WREN bit together help prevent an accidental write during:

- Brown-out
- Power Glitch
- Software Malfunction

11.2.4 DATA EEPROM OPERATION DURING CODE-PROTECT

Data memory can be code-protected by programming the $\overline{\text{CPD}}$ bit in the Configuration Word 1 (Register 5-1) to '0'.

When the data memory is code-protected, only the CPU is able to read and write data to the data EEPROM. It is recommended to code-protect the program memory when code-protecting data memory. This prevents anyone from replacing your program with a program that will access the contents of the data EEPROM.

EXAMPLE 11-2: DATA EEPROM WRITE

Required Sequence

```
BANKSEL  EEADRL          ;
MOVLW    DATA_EE_ADDR    ;
MOVWF    EEADRL          ;Data Memory Address to write
MOVLW    DATA_EE_DATA    ;
MOVWF    EEDATL          ;Data Memory Value to write
BCF      EECON1, CFGS    ;Deselect Configuration space
BCF      EECON1, EEPGD   ;Point to DATA memory
BSF      EECON1, WREN    ;Enable writes

BCF      INTCON, GIE     ;Disable INTs.
MOVLW    55h             ;
MOVWF    EECON2          ;Write 55h
MOVLW    0AAh            ;
MOVWF    EECON2          ;Write AAh
BSF      EECON1, WR      ;Set WR bit to begin write
BSF      INTCON, GIE     ;Enable Interrupts
BCF      EECON1, WREN    ;Disable writes
BTFSC    EECON1, WR      ;Wait for write to complete
GOTO     $-2             ;Done
```

FIGURE 11-1: FLASH PROGRAM MEMORY READ CYCLE EXECUTION

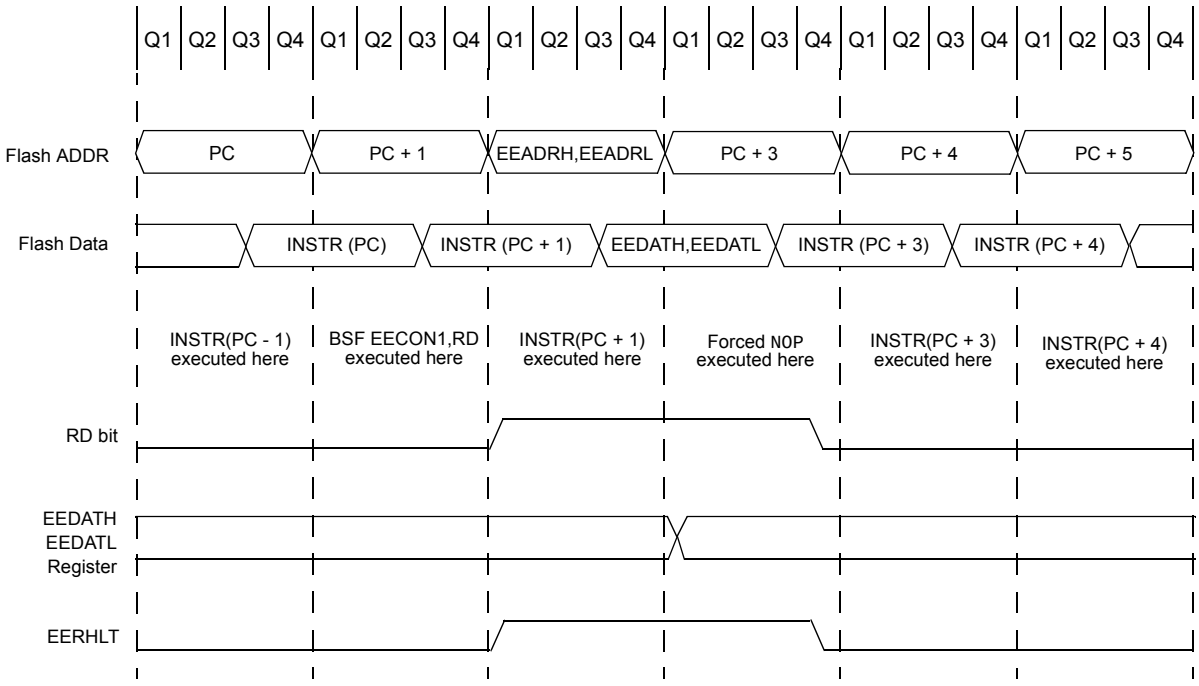

© 2010-2015 Microchip Technology Inc.

11.3 Flash Program Memory Overview

It is important to understand the Flash program memory structure for erase and programming operations. Flash program memory is arranged in rows. A row consists of a fixed number of 14-bit program memory words. A row is the minimum block size that can be erased by user software.

Flash program memory may only be written or erased if the destination address is in a segment of memory that is not write-protected, as defined in bits WRT<1:0> of Configuration Word 2.

After a row has been erased, the user can reprogram all or a portion of this row. Data to be written into the program memory row is written to 14-bit wide data write latches. These write latches are not directly accessible to the user, but may be loaded via sequential writes to the EEDATH:EEDATL register pair.

Note:	If the user wants to modify only a portion of a previously programmed row, then the contents of the entire row must be read and saved in RAM prior to the erase.

The number of data write latches is not equivalent to the number of row locations. During programming, user software will need to fill the set of write latches and initiate a programming operation multiple times in order to fully reprogram an erased row. For example, a device with a row size of 32 words and eight write latches will need to load the write latches with data and initiate a programming operation four times.

The size of a program memory row and the number of program memory write latches may vary by device. See Table 11-1 for details.

TABLE 11-1: FLASH MEMORY ORGANIZATION BY DEVICE

Device	Erase Block (Row) Size/ Boundary	Number of Write Latches/ Boundary
PIC16(L)F1824 PIC16(L)F1828	32 words, EEADRL<4:0> = 00000	32 words, EEADRL<4:0> = 00000

11.3.1 READING THE FLASH PROGRAM MEMORY

To read a program memory location, the user must:

1. Write the Least and Most Significant address bits to the EEADRH:EEADRL register pair.
2. Clear the CFGS bit of the EECON1 register.
3. Set the EEPGD control bit of the EECON1 register.
4. Then, set control bit RD of the EECON1 register.

Once the read control bit is set, the program memory Flash controller will use the second instruction cycle to read the data. This causes the second instruction immediately following the "BSF EECON1,RD" instruction to be ignored. The data is available in the very next cycle, in the EEDATH:EEDATL register pair; therefore, it can be read as two bytes in the following instructions.

EEDATH:EEDATL register pair will hold this value until another read or until it is written to by the user.

Note 1:	The two instructions following a program memory read are required to be NOPs. This prevents the user from executing a two-cycle instruction on the next instruction after the RD bit is set.
2:	Flash program memory can be read regardless of the setting of the $\overline{CP}$ bit.

EXAMPLE 11-3: FLASH PROGRAM MEMORY READ

```
* This code block will read 1 word of program
* memory at the memory address:
    PROG_ADDR_HI : PROG_ADDR_LO
*   data will be returned in the variables;
*   PROG_DATA_HI, PROG_DATA_LO

    BANKSEL  EEADRL           ; Select Bank for EEPROM registers
    MOVLW    PROG_ADDR_LO     ;
    MOVWF    EEADRL           ; Store LSB of address
    MOVLW    PROG_ADDR_HI     ;
    MOVWL    EEADRH           ; Store MSB of address

    BCF      EECON1,CFGS      ; Do not select Configuration Space
    BSF      EECON1,EEPGD     ; Select Program Memory
    BCF      INTCON,GIE       ; Disable interrupts
    BSF      EECON1,RD        ; Initiate read
    NOP                       ; Executed (Figure 11-1)
    NOP                       ; Ignored (Figure 11-1)
    BSF      INTCON,GIE       ; Restore interrupts

    MOVF     EEDATL,W         ; Get LSB of word
    MOVWF    PROG_DATA_LO     ; Store in user location
    MOVF     EEDATH,W         ; Get MSB of word
    MOVWF    PROG_DATA_HI     ; Store in user location
```


© 2010-2015 Microchip Technology Inc.

11.3.2 ERASING FLASH PROGRAM MEMORY

While executing code, program memory can only be erased by rows. To erase a row:

1. Load the EEADRH:EEADRL register pair with the address of the new row to be erased.
2. Clear the CFGS bit of the EECON1 register.
3. Set the EEPGD, FREE and WREN bits of the EECON1 register.
4. Write 55h, then AAh, to EECON2 (Flash programming unlock sequence).
5. Set control bit WR of the EECON1 register to begin the erase operation.
6. Poll the FREE bit in the EECON1 register to determine when the row erase has completed.

See Example 11-4.

After the "BSF EECON1,WR" instruction, the processor requires two cycles to set up the erase operation. The user must place two NOP instructions after the WR bit is set. The processor will halt internal operations for the typical 2ms erase time. This is not Sleep mode, as the clocks and peripherals will continue to run. After the erase cycle, the processor will resume operation with the third instruction after the EECON1 write instruction.

11.3.3 WRITING TO FLASH PROGRAM MEMORY

Program memory is programmed using the following steps:

1. Load the starting address of the word(s) to be programmed.
2. Load the write latches with data.
3. Initiate a programming operation.
4. Repeat steps 1 through 3 until all data is written.

Before writing to program memory, the word(s) to be written must be erased or previously unwritten. Program memory can only be erased one row at a time. No automatic erase occurs upon the initiation of the write.

Program memory can be written one or more words at a time. The maximum number of words written at one time is equal to the number of write latches. See Figure 11-2 (block writes to program memory with 32 write latches) for more details. The write latches are aligned to the address boundary defined by EEADRL as shown in Table 11-1. Write operations do not cross these boundaries. At the completion of a program memory write operation, the write latches are reset to contain 0x3FFF.

The following steps should be completed to load the write latches and program a block of program memory. These steps are divided into two parts. First, all write latches are loaded with data except for the last program memory location. Then, the last write latch is loaded and the programming sequence is initiated. A special unlock sequence is required to load a write latch with data or initiate a Flash programming operation. This unlock sequence should not be interrupted.

1. Set the EEPGD and WREN bits of the EECON1 register.
2. Clear the CFGS bit of the EECON1 register.
3. Set the LWLO bit of the EECON1 register. When the LWLO bit of the EECON1 register is '1', the write sequence will only load the write latches and will not initiate the write to Flash program memory.
4. Load the EEADRH:EEADRL register pair with the address of the location to be written.
5. Load the EEDATH:EEDATL register pair with the program memory data to be written.
6. Write 55h, then AAh, to EECON2, then set the WR bit of the EECON1 register (Flash programming unlock sequence). The write latch is now loaded.
7. Increment the EEADRH:EEADRL register pair to point to the next location.
8. Repeat steps 5 through 7 until all but the last write latch has been loaded.
9. Clear the LWLO bit of the EECON1 register. When the LWLO bit of the EECON1 register is '0', the write sequence will initiate the write to Flash program memory.
10. Load the EEDATH:EEDATL register pair with the program memory data to be written.
11. Write 55h, then AAh, to EECON2, then set the WR bit of the EECON1 register (Flash programming unlock sequence). The entire latch block is now written to Flash program memory.

It is not necessary to load the entire write latch block with user program data. However, the entire write latch block will be written to program memory.

An example of the complete write sequence for eight words is shown in Example 11-5. The initial address is loaded into the EEADRH:EEADRL register pair; the eight words of data are loaded using indirect addressing.

Note:	If the number of write latches is smaller than the erase block size, the code sequence provided in Example 11-5 may be repeated multiple times to fully program an erased program memory row.

After the "BSF EECON1,WR" instruction, the processor requires two cycles to set up the write operation. The user must place two NOP instructions after the WR bit is set. The processor will halt internal operations for the typical 2ms, only during the cycle in which the write takes place (i.e., the last word of the block write). This is not Sleep mode, as the clocks and peripherals will continue to run. The processor does not stall when LWLO = 1, loading the write latches. After the write cycle, the processor will resume operation with the third instruction after the EECON1 write instruction.

FIGURE 11-2: BLOCK WRITES TO FLASH PROGRAM MEMORY WITH 32 WRITE LATCHES

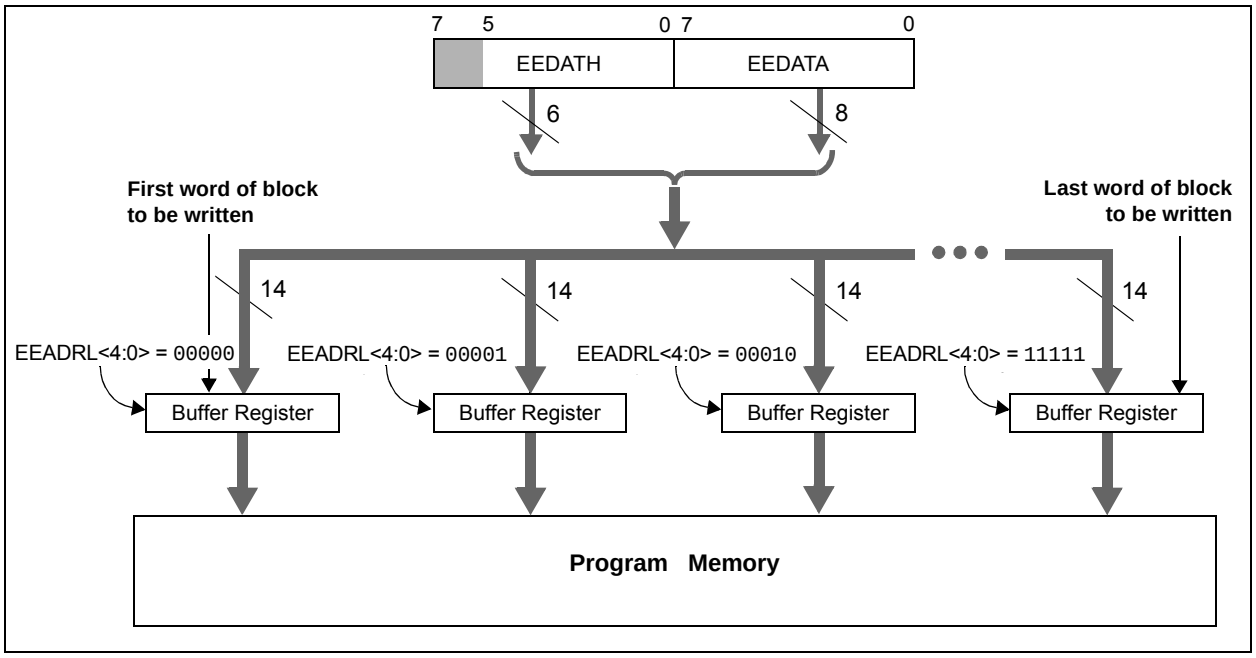

© 2010-2015 Microchip Technology Inc.

EXAMPLE 11-4: ERASING ONE ROW OF PROGRAM MEMORY

```
; This row erase routine assumes the following:
; 1. A valid address within the erase block is loaded in ADDRH:ADDRL
; 2. ADDRH and ADDRL are located in shared data memory 0x70 - 0x7F


        BCF         INTCON,GIE      ; Disable ints so required sequences will execute properly
        BANKSEL     EEADRL
        MOVF        ADDRL,W         ; Load lower 8 bits of erase address boundary
        MOVWF       EEADRL
        MOVF        ADDRH,W         ; Load upper 6 bits of erase address boundary
        MOVWF       EEADRH
        BSF         EECON1,EEPGD    ; Point to program memory
        BCF         EECON1,CFGS     ; Not configuration space
        BSF         EECON1,FREE     ; Specify an erase operation
        BSF         EECON1,WREN     ; Enable writes

Required
Sequence
        MOVLW       55h             ; Start of required sequence to initiate erase
        MOVWF       EECON2          ; Write 55h
        MOVLW       0AAh            ;
        MOVWF       EECON2          ; Write AAh
        BSF         EECON1,WR       ; Set WR bit to begin erase
        NOP                         ; Any instructions here are ignored as processor
                                    ; halts to begin erase sequence
        NOP                         ; Processor will stop here and wait for erase complete.

                                    ; after erase processor continues with 3rd instruction

        BCF         EECON1,WREN     ; Disable writes
        BSF         INTCON,GIE      ; Enable interrupts
```

EXAMPLE 11-5: WRITING TO FLASH PROGRAM MEMORY

```
; This write routine assumes the following:
; 1. The 16 bytes of data are loaded, starting at the address in DATA_ADDR
; 2. Each word of data to be written is made up of two adjacent bytes in DATA_ADDR,
;    stored in little endian format
; 3. A valid starting address (the least significant bits = 000) is loaded in ADDRH:ADDRL
; 4. ADDRH and ADDRL are located in shared data memory 0x70 - 0x7F
;
        BCF         INTCON,GIE     ; Disable ints so required sequences will execute properly
        BANKSEL     EEADRH         ; Bank 3
        MOVF        ADDRH,W        ; Load initial address
        MOVWF       EEADRH         ;
        MOVF        ADDRL,W        ;
        MOVWF       EEADRL         ;
        MOVLW       LOW DATA_ADDR  ; Load initial data address
        MOVWF       FSR0L          ;
        MOVLW       HIGH DATA_ADDR ; Load initial data address
        MOVWF       FSR0H          ;
        BSF         EECON1,EEPGD   ; Point to program memory
        BCF         EECON1,CFGS    ; Not configuration space
        BSF         EECON1,WREN    ; Enable writes
        BSF         EECON1,LWLO    ; Only Load Write Latches
LOOP
        MOVIW       FSR0++         ; Load first data byte into lower
        MOVWF       EEDATL         ;
        MOVIW       FSR0++         ; Load second data byte into upper
        MOVWF       EEDATH         ;

        MOVF        EEADRL,W       ; Check if lower bits of address are '000'
        XORLW       0x07           ; Check if we're on the last of 8 addresses
        ANDLW       0x07           ;
        BTFSC       STATUS,Z       ; Exit if last of eight words,
        GOTO        START_WRITE    ;

  Required Sequence
        MOVLW       55h            ; Start of required write sequence:
        MOVWF       EECON2         ; Write 55h
        MOVLW       0AAh           ;
        MOVWF       EECON2         ; Write AAh
        BSF         EECON1,WR      ; Set WR bit to begin write
        NOP                        ; Any instructions here are ignored as processor
                                   ; halts to begin write sequence
        NOP                        ; Processor will stop here and wait for write to complete.

                                   ; After write processor continues with 3rd instruction.

        INCF        EEADRL,F       ; Still loading latches Increment address
        GOTO        LOOP           ; Write next latches

START_WRITE
        BCF         EECON1,LWLO    ; No more loading latches - Actually start Flash program
                                   ; memory write

  Required Sequence
        MOVLW       55h            ; Start of required write sequence:
        MOVWF       EECON2         ; Write 55h
        MOVLW       0AAh           ;
        MOVWF       EECON2         ; Write AAh
        BSF         EECON1,WR      ; Set WR bit to begin write
        NOP                        ; Any instructions here are ignored as processor
                                   ; halts to begin write sequence
        NOP                        ; Processor will stop here and wait for write complete.

                                   ; after write processor continues with 3rd instruction
        BCF         EECON1,WREN    ; Disable writes
        BSF         INTCON,GIE     ; Enable interrupts
```


© 2010-2015 Microchip Technology Inc.

11.4 Modifying Flash Program Memory

When modifying existing data in a program memory row, and data within that row must be preserved, it must first be read and saved in a RAM image. Program memory is modified using the following steps:

1. Load the starting address of the row to be modified.
2. Read the existing data from the row into a RAM image.
3. Modify the RAM image to contain the new data to be written into program memory.
4. Load the starting address of the row to be rewritten.
5. Erase the program memory row.
6. Load the write latches with data from the RAM image.
7. Initiate a programming operation.
8. Repeat steps 6 and 7 as many times as required to reprogram the erased row.

11.5 User ID, Device ID and Configuration Word Access

Instead of accessing program memory or EEPROM data memory, the User ID's, Device ID/Revision ID and Configuration Words can be accessed when CFGS = 1 in the EECON1 register. This is the region that would be pointed to by PC<15> = 1, but not all addresses are accessible. Different access may exist for reads and writes. Refer to Table 11-2.

When read access is initiated on an address outside the parameters listed in Table 11-2, the EEDATH:EEDATL register pair is cleared.

TABLE 11-2: USER ID, DEVICE ID AND CONFIGURATION WORD ACCESS (CFGS = 1)

Address	Function	Read Access	Write Access
8000h-8003h	User IDs	Yes	Yes
8006h	Device ID/Revision ID	Yes	No
8007h-8008h	Configuration Words 1 and 2	Yes	No

EXAMPLE 11-3: CONFIGURATION WORD AND DEVICE ID ACCESS

```
* This code block will read 1 word of program memory at the memory address:
*   PROG_ADDR_LO (must be 00h-08h) data will be returned in the variables;
*   PROG_DATA_HI, PROG_DATA_LO

    BANKSEL  EEADRL           ; Select correct Bank
    MOVLW    PROG_ADDR_LO     ;
    MOVWF    EEADRL           ; Store LSB of address
    CLRF     EEADRH           ; Clear MSB of address

    BSF      EECON1,CFGS      ; Select Configuration Space
    BCF      INTCON,GIE       ; Disable interrupts
    BSF      EECON1,RD        ; Initiate read
    NOP                       ; Executed (See Figure 11-1)
    NOP                       ; Ignored (See Figure 11-1)
    BSF      INTCON,GIE       ; Restore interrupts

    MOVF     EEDATL,W         ; Get LSB of word
    MOVWF    PROG_DATA_LO     ; Store in user location
    MOVF     EEDATH,W         ; Get MSB of word
    MOVWF    PROG_DATA_HI     ; Store in user location
```

11.6 Write Verify

Depending on the application, good programming practice may dictate that the value written to the data EEPROM or program memory should be verified (see Example 11-6) to the desired value to be written. Example 11-6 shows how to verify a write to EEPROM.

EXAMPLE 11-6: EEPROM WRITE VERIFY

```
BANKSEL EEDATL      ;
MOVF    EEDATL, W   ;EEDATL not changed
                    ;from previous write
BSF     EECON1, RD  ;YES, Read the
                    ;value written
XORWF   EEDATL, W   ;
BTFSS   STATUS, Z   ;Is data the same
GOTO    WRITE_ERR   ;No, handle error
:                   ;Yes, continue
```


© 2010-2015 Microchip Technology Inc.

REGISTER 11-1: EEDATL: EEPROM DATA REGISTER

R/W-x/u	R/W-x/u	R/W-x/u	R/W-x/u	R/W-x/u	R/W-x/u	R/W-x/u	R/W-x/u
EEDAT<7:0>							
bit 7							bit 0

Legend:		
R = Readable bit	W = Writable bit	U = Unimplemented bit, read as '0'
u = Bit is unchanged	x = Bit is unknown	-n/n = Value at POR and BOR/Value at all other Resets
'1' = Bit is set	'0' = Bit is cleared	

bit 7-0 **EEDAT<7:0>**: Read/write value for EEPROM data byte or Least Significant bits of program memory

REGISTER 11-2: EEDATH: EEPROM DATA HIGH BYTE REGISTER

U-0	U-0	R/W-x/u	R/W-x/u	R/W-x/u	R/W-x/u	R/W-x/u	R/W-x/u
—	—	EEDAT<13:8>					
bit 7							bit 0

Legend:		
R = Readable bit	W = Writable bit	U = Unimplemented bit, read as '0'
u = Bit is unchanged	x = Bit is unknown	-n/n = Value at POR and BOR/Value at all other Resets
'1' = Bit is set	'0' = Bit is cleared	

bit 7-6 **Unimplemented:** Read as '0'

bit 5-0 **EEDAT<13:8>**: Read/write value for Most Significant bits of program memory

REGISTER 11-3: EEADRL: EEPROM ADDRESS REGISTER

R/W-0/0	R/W-0/0	R/W-0/0	R/W-0/0	R/W-0/0	R/W-0/0	R/W-0/0	R/W-0/0
EEADR<7:0>							
bit 7							bit 0

Legend:		
R = Readable bit	W = Writable bit	U = Unimplemented bit, read as '0'
u = Bit is unchanged	x = Bit is unknown	-n/n = Value at POR and BOR/Value at all other Resets
'1' = Bit is set	'0' = Bit is cleared	

bit 7-0 **EEADR<7:0>**: Specifies the Least Significant bits for program memory address or EEPROM address

REGISTER 11-4: EEADRH: EEPROM ADDRESS HIGH BYTE REGISTER

U-1	R/W-0/0	R/W-0/0	R/W-0/0	R/W-0/0	R/W-0/0	R/W-0/0	R/W-0/0
—(1)	EEADR<14:8>						
bit 7							bit 0

Legend:		
R = Readable bit	W = Writable bit	U = Unimplemented bit, read as '0'
u = Bit is unchanged	x = Bit is unknown	-n/n = Value at POR and BOR/Value at all other Resets
'1' = Bit is set	'0' = Bit is cleared	

bit 7 **Unimplemented:** Read as '1'

bit 6-0 **EEADR<14:8>**: Specifies the Most Significant bits for program memory address or EEPROM address

Note 1: Unimplemented, read as '1'.

REGISTER 11-5: EECON1: EEPROM CONTROL 1 REGISTER

R/W-0/0	R/W-0/0	R/W-0/0	R/W/HC-0/0	R/W-x/q	R/W-0/0	R/S/HC-0/0	R/S/HC-0/0
EEPGD	CFGS	LWLO	FREE	WRERR	WREN	WR	RD
bit 7							bit 0

Legend:		
R = Readable bit	W = Writable bit	U = Unimplemented bit, read as '0'
S = Bit can only be set	x = Bit is unknown	-n/n = Value at POR and BOR/Value at all other Resets
'1' = Bit is set	'0' = Bit is cleared	HC = Bit is cleared by hardware

bit 7 **EEPGD:** Flash Program/Data EEPROM Memory Select bit
- 1 = Accesses program space Flash memory
- 0 = Accesses data EEPROM memory

bit 6 **CFGS:** Flash Program/Data EEPROM or Configuration Select bit
- 1 = Accesses Configuration, User ID and Device ID Registers
- 0 = Accesses Flash Program or data EEPROM Memory

bit 5 **LWLO:** Load Write Latches Only bit

If CFGS = 1 (Configuration space) **OR** CFGS = 0 and EEPGD = 1 (program Flash):
- 1 = The next WR command does not initiate a write; only the program memory latches are updated.
- 0 = The next WR command writes a value from EEDATH:EEDATL into program memory latches and initiates a write of all the data stored in the program memory latches.

If CFGS = 0 and EEPGD = 0: (Accessing data EEPROM)
LWLO is ignored. The next WR command initiates a write to the data EEPROM.

bit 4 **FREE:** Program Flash Erase Enable bit

If CFGS = 1 (Configuration space) **OR** CFGS = 0 and EEPGD = 1 (program Flash):
- 1 = Performs an erase operation on the next WR command (cleared by hardware after completion of erase).
- 0 = Performs a write operation on the next WR command.

If EEPGD = 0 and CFGS = 0: (Accessing data EEPROM)
FREE is ignored. The next WR command will initiate both a erase cycle and a write cycle.

bit 3 **WRERR:** EEPROM Error Flag bit
- 1 = Condition indicates an improper program or erase sequence attempt or termination (bit is set automatically on any set attempt (write '1') of the WR bit).
- 0 = The program or erase operation completed normally

bit 2 **WREN:** Program/Erase Enable bit
- 1 = Allows program/erase cycles
- 0 = Inhibits programming/erasing of program Flash and data EEPROM

bit 1 **WR:** Write Control bit
- 1 = Initiates a program Flash or data EEPROM program/erase operation. The operation is self-timed and the bit is cleared by hardware once operation is complete. The WR bit can only be set (not cleared) in software.
- 0 = Program/erase operation to the Flash or data EEPROM is complete and inactive.

bit 0 **RD:** Read Control bit
- 1 = Initiates an program Flash or data EEPROM read. Read takes one cycle. RD is cleared in hardware. The RD bit can only be set (not cleared) in software.
- 0 = Does not initiate a program Flash or data EEPROM data read

© 2010-2015 Microchip Technology Inc.

REGISTER 11-6: EECON2: EEPROM CONTROL 2 REGISTER

W-0/0	W-0/0	W-0/0	W-0/0	W-0/0	W-0/0	W-0/0	W-0/0
EEPROM Control Register 2							
bit 7							bit 0

Legend:		
R = Readable bit	W = Writable bit	U = Unimplemented bit, read as '0'
S = Bit can only be set	x = Bit is unknown	-n/n = Value at POR and BOR/Value at all other Resets
'1' = Bit is set	'0' = Bit is cleared	

bit 7-0 **Data EEPROM Unlock Pattern bits**

To unlock writes, a 55h must be written first, followed by an AAh, before setting the WR bit of the EECON1 register. The value written to this register is used to unlock the writes. There are specific timing requirements on these writes. Refer to **Section 11.2.2 "Writing to the Data EEPROM Memory"** for more information.

TABLE 11-3: SUMMARY OF REGISTERS ASSOCIATED WITH DATA EEPROM

Name	Bit 7	Bit 6	Bit 5	Bit 4	Bit 3	Bit 2	Bit 1	Bit 0	Register on Page
EECON1	EEPGD	CFGS	LWLO	FREE	WRERR	WREN	WR	RD	114
EECON2	EEPROM Control Register 2 (not a physical register)								115*
EEADRL	EEADRL<7:0>								113
EEADRH	—(1)	EEADRH<6:0							113
EEDATL	EEDATL<7:0>								113
EEDATH	—	—	EEDATH<5:0>						113
INTCON	GIE	PEIE	TMR0IE	INTE	IOCIE	TMR0IF	INTF	IOCIF	89
PIE2	OSFIE	C2IE	C1IE	EEIE	BCL1IE	—	—	CCP2IE	91
PIR2	OSFIF	C2IF	C1IF	EEIF	BCL1IF	—	—	CCP2IF	94

Legend: — = unimplemented location, read as '0'. Shaded cells are not used by data EEPROM module.

* Page provides register information.

Note 1: Unimplemented, read as '1'.

12.0 I/O PORTS

Depending on the device selected and peripherals enabled, there are up to two ports available. In general, when a peripheral is enabled, that pin may not be used as a general purpose I/O pin.

Each port has three registers for its operation. These registers are:

- TRISx registers (data direction register)
- PORTx registers (reads the levels on the pins of the device)
- LATx registers (output latch)

The Data Latch (LATx registers) is useful for read-modify-write operations on the value that the I/O pins are driving.

A write operation to the LATx register has the same affect as a write to the corresponding PORTx register. A read of the LATx register reads of the values held in the I/O PORT latches, while a read of the PORTx register reads the actual I/O pin value.

Ports with analog functions also have an ANSELx register which can disable the digital input and save power. A simplified model of a generic I/O port, without the interfaces to other peripherals, is shown in Figure 12-1.

FIGURE 12-1: GENERIC I/O PORT OPERATION

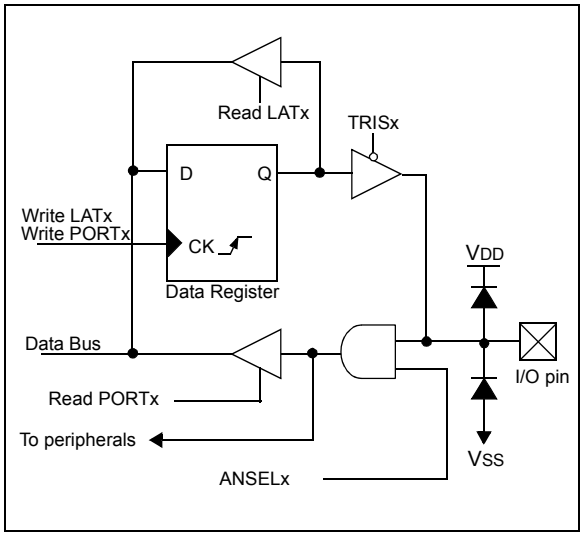

12.1 Alternate Pin Function

The Alternate Pin Function Control 0 (APFCON0) and Alternate Pin Function Control 1 (APFCON1) registers are used to steer specific peripheral input and output functions between different pins. The APFCON0 and APFCON1 registers are shown in Register 12-1 and Register 12-2. For this device family, the following functions can be moved between different pins.

- RX/DT/TX/CK
- SDO
- $\overline{SS}$ (Slave Select)
- T1G
- P1B/P1C/P1D/P2B
- CCP1/P1A/CCP2

These bits have no effect on the values of any TRIS register. PORT and TRIS overrides will be routed to the correct pin. The unselected pin will be unaffected.

© 2010-2015 Microchip Technology Inc.

REGISTER 12-1: APFCON0: ALTERNATE PIN FUNCTION CONTROL REGISTER 0

R/W-0/0	R/W-0/0	R/W-0/0	U-0	R/W-0/0	R/W-0/0	U-0	U-0
RXDTSEL	SDOSEL(1)	SSSEL(1)	—	T1GSEL	TXCKSEL	—	—
bit 7							bit 0

Legend:		
R = Readable bit	W = Writable bit	U = Unimplemented bit, read as '0'
u = Bit is unchanged	x = Bit is unknown	-n/n = Value at POR and BOR/Value at all other Resets
'1' = Bit is set	'0' = Bit is cleared	

bit 7 **RXDTSEL:** Pin Selection
(PIC16(L)F1824)
0 = RX/DT function is on RC5
1 = RX/DT function is on RA1
(PIC16(L)F1828)
0 = RX/DT function is on RB5
1 = RX/DT function is on RC5

bit 6 **SDOSEL:** Pin Selection
(PIC16(L)F1824)
0 = SDO function is on RC2
1 = SDO function is on RA4
(PIC16(L)F1828)
Bit is Read-Only, '0'
SDO function is always on RC7

bit 5 **SSSEL:** Pin Selection
(PIC16(L)F1824)
0 = $\overline{SS}$ function is on RC3
1 = $\overline{SS}$ function is on RA3
(PIC16(L)F1828)
Bit is Read-Only, '0'
$\overline{SS}$ function is always on RC6

bit 4 **Unimplemented:** Read as '0'

bit 3 **T1GSEL:** Pin Selection
0 = T1G function is on RA4
1 = T1G function is on RA3

bit 2 **TXCKSEL:** Pin Selection
(PIC16(L)F1824)
0 = TX/CK function is on RC4
1 = TX/CK function is on RA0
(PIC16(L)F1828)
0 = TX/CK function is on RB7
1 = TX/CK function is on RC4

bit 1-0 **Unimplemented:** Read as '0'

Note 1: PIC16(L)F1824 only.

REGISTER 12-2: APFCON1: ALTERNATE PIN FUNCTION CONTROL REGISTER 1

U-0	U-0	U-0	U-0	R/W-0/0	R/W-0/0	R/W-0/0	R/W-0/0
—	—	—	—	P1DSEL	P1CSEL	P2BSEL	CCP2SEL
bit 7							bit 0

Legend:		
R = Readable bit	W = Writable bit	U = Unimplemented bit, read as ‘0’
u = Bit is unchanged	x = Bit is unknown	-n/n = Value at POR and BOR/Value at all other Resets
‘1’ = Bit is set	‘0’ = Bit is cleared	

bit 7-4 **Unimplemented:** Read as ‘0’

bit 3 **P1DSEL:** Pin Selection
- 0 = P1D function is on RC2
- 1 = P1D function is on RC0

bit 2 **P1CSEL:** Pin Selection
- 0 = P1C function is on RC3
- 1 = P1C function is on RC1

bit 1 **P2BSEL:** Pin Selection
- 0 = P2B function is on RC2
- 1 = P2B function is on RA4

bit 0 **CCP2SEL:** Pin Selection
- 0 = CCP2/P2A function is on RC3
- 1 = CCP2/P2A function is on RA5

© 2010-2015 Microchip Technology Inc.

12.2 PORTA Registers

PORTA is a 6-bit wide, bidirectional port. The corresponding data direction register is TRISA (Register 12-4). Setting a TRISA bit (= 1) will make the corresponding PORTA pin an input (i.e., disable the output driver). Clearing a TRISA bit (= 0) will make the corresponding PORTA pin an output (i.e., enables output driver and puts the contents of the output latch on the selected pin). The exception is RA3, which is input only and its TRIS bit will always read as '1'. Example 12-1 shows how to initialize PORTA.

Reading the PORTA register (Register 12-3) reads the status of the pins, whereas writing to it will write to the PORT latch. All write operations are read-modify-write operations. Therefore, a write to a port implies that the port pins are read, this value is modified and then written to the PORT data latch (LATA).

The TRISA register (Register 12-4) controls the PORTA pin output drivers, even when they are being used as analog inputs. The user should ensure the bits in the TRISA register are maintained set when using them as analog inputs. I/O pins configured as analog input always read '0'.

The INLVLA register (Register 12-8) controls the input voltage threshold for each of the available PORTA input pins. A selection between the Schmitt Trigger CMOS or the TTL Compatible thresholds is available. The input threshold is important in determining the value of a read of the PORTA register and also the level at which an Interrupt-on-Change occurs, if that feature is enabled. See **Section 30.4 "DC Characteristics: PIC16(L)F1824/8-I/E"** for more information on threshold levels.

Note:	Changing the input threshold selection should be performed while all peripheral modules are disabled. Changing the threshold level during the time a module is active may inadvertently generate a transition associated with an input pin, regardless of the actual voltage level on that pin.

12.2.1 WEAK PULL-UPS

Each of the PORTA pins has an individually configurable internal weak pull-up. Control bits WPUA<5:0> enable or disable each pull-up (see Register 12-7). Each weak pull-up is automatically turned off when the port pin is configured as an output. All pull-ups are disabled on a Power-on Reset by the WPUEN bit of the OPTION_REG register.

12.2.2 ANSELA REGISTER

The ANSELA register (Register 12-6) is used to configure the Input mode of an I/O pin to analog. Setting the appropriate ANSELA bit high will cause all digital reads on the pin to be read as '0' and allow analog functions on the pin to operate correctly.

The state of the ANSELA bits has no affect on digital output functions. A pin with TRIS clear and ANSEL set will still operate as a digital output, but the Input mode will be analog. This can cause unexpected behavior when executing read-modify-write instructions on the affected port.

Note:	The ANSELA register must be initialized to configure an analog channel as a digital input. Pins configured as analog inputs will read '0'.

EXAMPLE 12-1: INITIALIZING PORTA

```
BANKSEL  PORTA        ;
CLRF     PORTA        ;Init PORTA
BANKSEL  LATA         ;Data Latch
CLRF     LATA         ;
BANKSEL  ANSELA       ;
CLRF     ANSELA       ;digital I/O
BANKSEL  TRISA        ;
MOVLW    B'00111000'  ;Set RA<5:3> as inputs
MOVWF    TRISA        ;and set RA<2:0> as
                      ;outputs
```

12.2.3 PORTA FUNCTIONS AND OUTPUT PRIORITIES

Each PORTA pin is multiplexed with other functions. The pins, their combined functions and their output priorities are briefly described here. For additional information, refer to the appropriate section in this data sheet.

When multiple outputs are enabled, the actual pin control goes to the peripheral with the lowest number in the following lists.

Analog input functions, such as ADC, comparator and CapSense inputs, are not shown in the priority lists. These inputs are active when the I/O pin is set for Analog mode using the ANSELx registers. Digital output functions may control the pin when it is in Analog mode with the priority shown below.

RA0

1. ICSPDAT
2. ICDDAT
3. DACOUT (DAC)

RA1

1. ICSPCLK
2. ICDCLK
3. RX/DT (EUSART)

RA2

1. SRQ
2. C1OUT (Comparator)
3. CCP3

RA3

No output priorities. Input only pin.

RA4

1. CLKOUT
2. T1OSO
3. CLKR
4. SDO
5. P2B

RA5

1. CCP2/P2A

© 2010-2015 Microchip Technology Inc.

REGISTER 12-3: PORTA: PORTA REGISTER

U-0	U-0	R/W-x/x	R/W-x/x	R-x/x	R/W-x/x	R/W-x/x	R/W-x/x
—	—	RA5	RA4	RA3	RA2	RA1	RA0
bit 7							bit 0

Legend:		
R = Readable bit	W = Writable bit	U = Unimplemented bit, read as ‘0’
u = Bit is unchanged	x = Bit is unknown	-n/n = Value at POR and BOR/Value at all other Resets
‘1’ = Bit is set	‘0’ = Bit is cleared	

bit 7-6 **Unimplemented:** Read as ‘0

bit 5-0 **RA<5:0>**: PORTA I/O Value bits(1)
1 = Port pin is > VIH
0 = Port pin is < VIL

Note 1: Writes to PORTA are actually written to corresponding LATA register. Reads from PORTA register is return of actual I/O pin values.

REGISTER 12-4: TRISA: PORTA TRI-STATE REGISTER

U-0	U-0	R/W-1/1	R/W-1/1	R-1/1	R/W-1/1	R/W-1/1	R/W-1/1
—	—	TRISA5	TRISA4	TRISA3	TRISA2	TRISA1	TRISA0
bit 7							bit 0

Legend:		
R = Readable bit	W = Writable bit	U = Unimplemented bit, read as ‘0’
u = Bit is unchanged	x = Bit is unknown	-n/n = Value at POR and BOR/Value at all other Resets
‘1’ = Bit is set	‘0’ = Bit is cleared	

bit 7-6 **Unimplemented:** Read as ‘0

bit 5-4 **TRISA<5:4>:** PORTA Tri-State Control bit
1 = PORTA pin configured as an input (tri-stated)
0 = PORTA pin configured as an output

bit 3 **TRISA3:** RA3 Port Tri-State Control bit
This bit is always ‘1’ as RA3 is an input only

bit 2-0 **TRISA<2:0>:** PORTA Tri-State Control bit
1 = PORTA pin configured as an input (tri-stated)
0 = PORTA pin configured as an output

REGISTER 12-5: LATA: PORTA DATA LATCH REGISTER

U-0	U-0	R/W-x/u	R/W-x/u	U-0	R/W-x/u	R/W-x/u	R/W-x/u
—	—	LATA5	LATA4	—	LATA2	LATA1	LATA0
bit 7							bit 0

Legend:		
R = Readable bit	W = Writable bit	U = Unimplemented bit, read as '0'
u = Bit is unchanged	x = Bit is unknown	-n/n = Value at POR and BOR/Value at all other Resets
'1' = Bit is set	'0' = Bit is cleared	

bit 7-6 **Unimplemented:** Read as '0'

bit 5-4 **LATA<5:4>**: RA<5:4> Output Latch Value bits(1)

bit 3 **Unimplemented:** Read as '0'

bit 2-0 **LATA<2:0>**: RA<2:0> Output Latch Value bits(1)

Note 1: Writes to PORTA are actually written to corresponding LATA register. Reads from PORTA register is return of actual I/O pin values.

REGISTER 12-6: ANSELA: PORTA ANALOG SELECT REGISTER

U-0	U-0	U-0	R/W-1/1	U-0	R/W-1/1	R/W-1/1	R/W-1/1
—	—	—	ANSA4	—	ANSA2	ANSA1	ANSA0
bit 7							bit 0

Legend:		
R = Readable bit	W = Writable bit	U = Unimplemented bit, read as '0'
u = Bit is unchanged	x = Bit is unknown	-n/n = Value at POR and BOR/Value at all other Resets
'1' = Bit is set	'0' = Bit is cleared	

bit 7-5 **Unimplemented:** Read as '0'

bit 4 **ANSA4**: Analog Select between Analog or Digital Function on pins RA4, respectively
0 = Digital I/O. Pin is assigned to port or digital special function.
1 = Analog input. Pin is assigned as analog input(1). Digital input buffer disabled.

bit 3 **Unimplemented:** Read as '0'

bit 2-0 **ANSA<2:0>**: Analog Select between Analog or Digital Function on pins RA<2:0>, respectively
0 = Digital I/O. Pin is assigned to port or digital special function.
1 = Analog input. Pin is assigned as analog input(1). Digital input buffer disabled.

Note 1: When setting a pin to an analog input, the corresponding TRIS bit must be set to Input mode in order to allow external control of the voltage on the pin.

© 2010-2015 Microchip Technology Inc.

REGISTER 12-7: WPUA: WEAK PULL-UP PORTA REGISTER

U-0	U-0	R/W-1/1	R/W-1/1	R/W-1/1	R/W-1/1	R/W-1/1	R/W-1/1
—	—	WPUA5	WPUA4	WPUA3	WPUA2	WPUA1	WPUA0
bit 7							bit 0

Legend:		
R = Readable bit	W = Writable bit	U = Unimplemented bit, read as '0'
u = Bit is unchanged	x = Bit is unknown	-n/n = Value at POR and BOR/Value at all other Resets
'1' = Bit is set	'0' = Bit is cleared	

bit 7-6 **Unimplemented:** Read as '0'

bit 5-0 **WPUA<5:0>**: Weak Pull-up Register bits(1,2)
1 = Pull-up enabled
0 = Pull-up disabled

Note 1: Global $\overline{\text{WPUEN}}$ bit of the OPTION_REG register must be cleared for individual pull-ups to be enabled.
2: The weak pull-up device is automatically disabled if the pin is in configured as an output.

REGISTER 12-8: INLVLA: PORTA INPUT LEVEL CONTROL REGISTER

U-0	U-0	R/W-0/0	R/W-0/0	R/W-0/0	R/W-1/1	R/W-0/0	R/W-0/0
—	—	INLVLA5	INLVLA4	INLVLA3	INLVLA2	INLVLA1	INLVLA0
bit 7							bit 0

Legend:		
R = Readable bit	W = Writable bit	U = Unimplemented bit, read as '0'
u = Bit is unchanged	x = Bit is unknown	-n/n = Value at POR and BOR/Value at all other Resets
'1' = Bit is set	'0' = Bit is cleared	

bit 7-6 **Unimplemented:** Read as '0'

bit 5-0 **INLVLA<5:0>:** PORTA Input Level Select bits
For RA<5:0> pins, respectively
1 = ST input used for PORT reads and interrupt-on-change
0 = TTL input used for PORT reads and interrupt-on-change

TABLE 12-1: SUMMARY OF REGISTERS ASSOCIATED WITH PORTA

Name	Bit 7	Bit 6	Bit 5	Bit 4	Bit 3	Bit 2	Bit 1	Bit 0	Register on Page
ANSELA	—	—	—	ANSA4	—	ANSA2	ANSA1	ANSA0	122
APFCON0(1)	RXDTSEL	SDOSEL	SSSEL	—	T1GSEL	TXCKSEL	—	—	117
APFCON1	—	—	—	—	P1DSEL	P1CSEL	P2BSEL	CCP2SEL	118
INLVLA	—	—	INLVLA5	INLVLA4	INLVLA3	INLVLA2	INLVLA1	INLVLA0	123
LATA	—	—	LATA5	LATA4	—	LATA2	LATA1	LATA0	122
OPTION_REG	$\overline{\text{WPUEN}}$	INTEDG	TMR0CS	TMR0SE	PSA	PS<2:0>			176
PORTA	—	—	RA5	RA4	RA3	RA2	RA1	RA0	121
TRISA	—	—	TRISA5	TRISA4	TRISA3	TRISA2	TRISA1	TRISA0	121
WPUA	—	—	WPUA5	WPUA4	WPUA3	WPUA2	WPUA1	WPUA0	123

Legend: x = unknown, u = unchanged, – = unimplemented locations, read as '0'. Shaded cells are not used by PORTA.
Note 1: Unshaded cells apply to PIC16(L)F1824 only.

TABLE 12-2: SUMMARY OF CONFIGURATION WORD WITH PORTA

Name	Bits	Bit -/7	Bit -/6	Bit 13/5	Bit 12/4	Bit 11/3	Bit 10/2	Bit 9/1	Bit 8/0	Register on Page
CONFIG1	13:8	—	—	FCMEN	IESO	$\overline{\text{CLKOUTEN}}$	BOREN<1:0>		$\overline{\text{CPD}}$	48
	7:0	$\overline{\text{CP}}$	MCLRE	$\overline{\text{PWRTE}}$	WDTE<1:0>		FOSC<2:0>			

Legend: — = unimplemented location, read as '0'. Shaded cells are not used by PORTA.

© 2010-2015 Microchip Technology Inc.

12.3 PORTB Registers (PIC16(L)F1828 only)

PORTB is a 4-bit wide, bidirectional port. The corresponding data direction register is TRISB (Register 12-10). Setting a TRISB bit (= 1) will make the corresponding PORTB pin an input (i.e., put the corresponding output driver in a High-Impedance mode). Clearing a TRISB bit (= 0) will make the corresponding PORTB pin an output (i.e., enable the output driver and put the contents of the output latch on the selected pin). Example 12-2 shows how to initialize PORTB.

Reading the PORTB register (Register 12-9) reads the status of the pins, whereas writing to it will write to the PORT latch. All write operations are read-modify-write operations. Therefore, a write to a port implies that the port pins are read, this value is modified and then written to the PORT data latch (LATB).

The TRISB register (Register 12-10) controls the PORTB pin output drivers, even when they are being used as analog inputs. The user should ensure the bits in the TRISB register are maintained set when using them as analog inputs. I/O pins configured as analog input always read '0'.

The INLVLB register (Register 12-14) controls the input voltage threshold for each of the available PORTB input pins. A selection between the Schmitt Trigger CMOS or the TTL Compatible thresholds is available. The input threshold is important in determining the value of a read of the PORTB register and also the level at which an Interrupt-on-Change occurs, if that feature is enabled. See **Section 30.4 "DC Characteristics: PIC16(L)F1824/8-I/E"** for more information on threshold levels.

Note:	Changing the input threshold selection should be performed while all peripheral modules are disabled. Changing the threshold level during the time a module is active may inadvertently generate a transition associated with an input pin, regardless of the actual voltage level on that pin.

12.3.1 WEAK PULL-UPS

Each of the PORTB pins has an individually configurable internal weak pull-up. Control bits WPUB<7:4> enable or disable each pull-up (see Register 12-13). Each weak pull-up is automatically turned off when the port pin is configured as an output. All pull-ups are disabled on a Power-on Reset by the $\overline{\text{WPUEN}}$ bit of the OPTION_REG register.

12.3.2 ANSELB REGISTER

The ANSELB register (Register 12-12) is used to configure the Input mode of an I/O pin to analog. Setting the appropriate ANSELB bit high will cause all digital reads on the pin to be read as '0' and allow analog functions on the pin to operate correctly.

The state of the ANSELB bits has no affect on digital output functions. A pin with TRIS clear and ANSELB set will still operate as a digital output, but the Input mode will be analog. This can cause unexpected behavior when executing read-modify-write instructions on the affected port.

Note:	The ANSELB register must be initialized to configure an analog channel as a digital input. Pins configured as analog inputs will read '0'.

EXAMPLE 12-2: INITIALIZING PORTB

```
BANKSEL  PORTB       ;
CLRF     PORTB       ;Init PORTB
BANKSEL  LATB        ;Data Latch
CLRF     LATB        ;
BANKSEL  ANSELB
CLRF     ANSELB      ;Make RB<7:4> digital
BANKSEL  TRISB       ;
MOVLW    B'11110000';Set RB<7:4> as inputs
MOVWF    TRISB       ;
```

12.3.3 PORTB FUNCTIONS AND OUTPUT PRIORITIES

Each PORTB pin is multiplexed with other functions. The pins, their combined functions and their output priorities are briefly described here. For additional information, refer to the appropriate section in this data sheet.

When multiple outputs are enabled, the actual pin control goes to the peripheral with the lowest number in the following lists.

Analog input and some digital input functions are not included in the list below. These input functions can remain active when the pin is configured as an output. Certain digital input functions override other port functions and are included in the priority list.

RB4

SDA (MSSP)

RB5

RX/DT (EUSART)

RB6

SCL/SCK (MSSP)

RB7

TX/CK (EUSART)

© 2010-2015 Microchip Technology Inc.

REGISTER 12-9: PORTB: PORTB REGISTER

R/W-x/u	R/W-x/u	R/W-x/u	R/W-x/u	U-0	U-0	U-0	U-0
RB7	RB6	RB5	RB4	—	—	—	—
bit 7							bit 0

Legend:		
R = Readable bit	W = Writable bit	U = Unimplemented bit, read as '0'
u = Bit is unchanged	x = Bit is unknown	-n/n = Value at POR and BOR/Value at all other Resets
'1' = Bit is set	'0' = Bit is cleared	

bit 7-4 **RB<7:4>**: PORTB General Purpose I/O Pin bits
1 = Port pin is > VIH
0 = Port pin is < VIL

bit 3-0 **Unimplemented:** Read as '0'

REGISTER 12-10: TRISB: PORTB TRI-STATE REGISTER

R/W-1/1	R/W-1/1	R/W-1/1	R/W-1/1	U-0	U-0	U-0	U-0
TRISB7	TRISB6	TRISB5	TRISB4	—	—	—	—
bit 7							bit 0

Legend:		
R = Readable bit	W = Writable bit	U = Unimplemented bit, read as '0'
u = Bit is unchanged	x = Bit is unknown	-n/n = Value at POR and BOR/Value at all other Resets
'1' = Bit is set	'0' = Bit is cleared	

bit 7-4 **TRISB<7:4>:** PORTB Tri-State Control bits
1 = PORTB pin configured as an input (tri-stated)
0 = PORTB pin configured as an output

bit 3-0 **Unimplemented:** Read as '0'

REGISTER 12-11: LATB: PORTB DATA LATCH REGISTER

R/W-x/u	R/W-x/u	R/W-x/u	R/W-x/u	U-0	U-0	U-0	U-0
LATB7	LATB6	LATB5	LATB4	—	—	—	—
bit 7							bit 0

Legend:		
R = Readable bit	W = Writable bit	U = Unimplemented bit, read as '0'
u = Bit is unchanged	x = Bit is unknown	-n/n = Value at POR and BOR/Value at all other Resets
'1' = Bit is set	'0' = Bit is cleared	

bit 7-4 **LATB<7:4>**: PORTB Output Latch Value bits(1)

bit 3-0 **Unimplemented:** Read as '0'

Note 1: Writes to PORTB are actually written to corresponding LATB register. Reads from PORTB register is return of actual I/O pin values.

REGISTER 12-12: ANSELB: PORTB ANALOG SELECT REGISTER

U-0	U-0	R/W-1/1	R/W-1/1	U-0	U-0	U-0	U-0
—	—	ANSB5	ANSB4	—	—	—	—
bit 7							bit 0

Legend:		
R = Readable bit	W = Writable bit	U = Unimplemented bit, read as '0'
u = Bit is unchanged	x = Bit is unknown	-n/n = Value at POR and BOR/Value at all other Resets
'1' = Bit is set	'0' = Bit is cleared	

bit 7-6 **Unimplemented:** Read as '0'

bit 5-4 **ANSB<5:4>**: Analog Select between Analog or Digital Function on pins RB<5:4>, respectively
0 = Digital I/O. Pin is assigned to port or digital special function.
1 = Analog input. Pin is assigned as analog input(1). Digital input buffer disabled.

bit 3-0 **Unimplemented:** Read as '0'

Note 1: When setting a pin to an analog input, the corresponding TRIS bit must be set to Input mode in order to allow external control of the voltage on the pin.

REGISTER 12-13: WPUB: WEAK PULL-UP PORTB REGISTER

R/W-1/1	R/W-1/1	R/W-1/1	R/W-1/1	U-0	U-0	U-0	U-0
WPUB7	WPUB6	WPUB5	WPUB4	—	—	—	—
bit 7							bit 0

Legend:		
R = Readable bit	W = Writable bit	U = Unimplemented bit, read as '0'
u = Bit is unchanged	x = Bit is unknown	-n/n = Value at POR and BOR/Value at all other Resets
'1' = Bit is set	'0' = Bit is cleared	

bit 7-4 **WPUB<7:4>**: Weak Pull-up Register bits(1,2)
1 = Pull-up enabled
0 = Pull-up disabled

bit 3-0 **Unimplemented:** Read as '0'

Note 1: Global $\overline{\text{WPUEN}}$ bit of the OPTION_REG register must be cleared for individual pull-ups to be enabled.
2: The weak pull-up device is automatically disabled if the pin is in configured as an output.

REGISTER 12-14: INLVLB: PORTB INPUT LEVEL CONTROL REGISTER

R/W-0/0	R/W-0/0	R/W-0/0	R/W-0/0	U-0	U-0	U-0	U-0
INLVLB7	INLVLB6	INLVLB5	INLVLB4	—	—	—	—
bit 7							bit 0

Legend:		
R = Readable bit	W = Writable bit	U = Unimplemented bit, read as '0'
u = Bit is unchanged	x = Bit is unknown	-n/n = Value at POR and BOR/Value at all other Resets
'1' = Bit is set	'0' = Bit is cleared	

bit 7-4 **INLVLB<7:4>:** PORTB Input Level Select bits
For RB<7:4> pins, respectively
1 = ST input used for PORT reads and interrupt-on-change
0 = TTL input used for PORT reads and interrupt-on-change

bit 3-0 **Unimplemented:** Read as '0

© 2010-2015 Microchip Technology Inc.

TABLE 12-3: SUMMARY OF REGISTERS ASSOCIATED WITH PORTB(1)

Name	Bit 7	Bit 6	Bit 5	Bit 4	Bit 3	Bit 2	Bit 1	Bit 0	Register on Page
ANSELB	—	—	ANSB5	ANSB4	—	—	—	—	128
INLVLB	INLVLB7	INLVLB6	INLVLB5	INLVLB4	—	—	—	—	128
LATB	LATB7	LATB6	LATB5	LATB4	—	—	—	—	127
PORTB	RB7	RB6	RB5	RB4	—	—	—	—	127
TRISB	TRISB7	TRISB6	TRISB5	TRISB4	—	—	—	—	127
WPUB	WPUB7	WPUB6	WPUB5	WPUB4	—	—	—	—	128

Legend: x = unknown, u = unchanged, - = unimplemented locations, read as '0'. Shaded cells are not used by PORTB.
Note 1: PIC16(L)F1828 only.

12.4 PORTC Registers

PORTC is a 6-bit wide (8-bit wide for PIC16(L)F1828), bidirectional port. The corresponding data direction register is TRISC (Register 12-16). Setting a TRISC bit (= 1) will make the corresponding PORTC pin an input (i.e., put the corresponding output driver in a High-Impedance mode). Clearing a TRISC bit (= 0) will make the corresponding PORTC pin an output (i.e., enable the output driver and put the contents of the output latch on the selected pin). Example 12-3 shows how to initialize PORTC.

Reading the PORTC register (Register 12-15) reads the status of the pins, whereas writing to it will write to the PORT latch. All write operations are read-modify-write operations. Therefore, a write to a port implies that the port pins are read, this value is modified and then written to the PORT data latch (LATC).

The TRISC register (Register 12-16) controls the PORTC pin output drivers, even when they are being used as analog inputs. The user should ensure the bits in the TRISC register are maintained set when using them as analog inputs. I/O pins configured as analog input always read '0'.

The INLVLC register (Register 12-20) controls the input voltage threshold for each of the available PORTC input pins. A selection between the Schmitt Trigger CMOS or the TTL Compatible thresholds is available. The input threshold is important in determining the value of a read of the PORTC register and also the level at which an Interrupt-on-Change occurs, if that feature is enabled. See **Section 30.4 "DC Characteristics: PIC16(L)F1824/8-I/E"** for more information on threshold levels.

Note:	Changing the input threshold selection should be performed while all peripheral modules are disabled. Changing the threshold level during the time a module is active may inadvertently generate a transition associated with an input pin, regardless of the actual voltage level on that pin.

12.4.1 WEAK PULL-UPS

Each of the PORTC pins has an individually configurable internal weak pull-up. Control bits WPUC<7:0> enable or disable each pull-up (see Register 12-19). Each weak pull-up is automatically turned off when the port pin is configured as an output. All pull-ups are disabled on a Power-on Reset by the WPUEN bit of the OPTION_REG register.

12.4.2 ANSELC REGISTER

The ANSELC register (Register 12-18) is used to configure the Input mode of an I/O pin to analog. Setting the appropriate ANSELC bit high will cause all digital reads on the pin to be read as '0' and allow analog functions on the pin to operate correctly.

The state of the ANSELC bits has no affect on digital output functions. A pin with TRIS clear and ANSELC set will still operate as a digital output, but the Input mode will be analog. This can cause unexpected behavior when executing read-modify-write instructions on the affected port.

Note:	The ANSELC register must be initialized to configure an analog channel as a digital input. Pins configured as analog inputs will read '0'.

EXAMPLE 12-3: INITIALIZING PORTC

```
BANKSEL  PORTC       ;
CLRF     PORTC       ;Init PORTC
BANKSEL  LATC        ;Data Latch
CLRF     LATC        ;
BANKSEL  ANSELC
CLRF     ANSELC      ;Make RC<5:0> digital
BANKSEL  TRISB       ;
MOVLW    B'00110000';Set RC<5:4> as inputs
                     ;and RC<3:0> as outputs
MOVWF    TRISC       ;
```


© 2010-2015 Microchip Technology Inc.

12.4.3 PORTC FUNCTIONS AND OUTPUT PRIORITIES

Each PORTC pin is multiplexed with other functions. The pins, their combined functions and their output priorities are briefly described here. For additional information, refer to the appropriate section in this data sheet.

When multiple outputs are enabled, the actual pin control goes to the peripheral with the lowest number in the following lists.

Analog input and some digital input functions are not included in the list below. These input functions can remain active when the pin is configured as an output. Certain digital input functions override other port functions and are included in the priority list.

RC0

1. SCL (MSSP) (PIC16(L)F1824 only)
2. SCK (MSSP) (PIC16(L)F1824 only)
3. P1D

RC1

1. SDA (MSSP) (PIC16(L)F1824 only)
2. P1C
3. CCP4 (PIC16(L)F1828 only)

RC2

1. SDO (MSSP) (PIC16(L)F1824 only)
2. P1D
3. P2B

RC3

1. $\overline{SS}$ (MSSP) (PIC16(L)F1824 only)
2. CCP2
3. P1C
4. P2A

RC4

1. MDOUT
2. SRNQ
3. C2OUT
4. TX/CK
5. P1B

RC5

1. RX/DT
2. CCP1/P1A

RC6 (PIC16(L)F1828 only)

1. $\overline{SS}$ (MSSP)
2. CCP4

RC7 (PIC16(L)F1828 only)

1. SDO (MSSP)

REGISTER 12-15: PORTC: PORTC REGISTER

R/W-x/u	R/W-x/u	R/W-x/u	R/W-x/u	R/W-x/u	R/W-x/u	R/W-x/u	R/W-x/u
RC7(1)	RC6(1)	RC5	RC4	RC3	RC2	RC1	RC0
bit 7							bit 0

Legend:		
R = Readable bit	W = Writable bit	U = Unimplemented bit, read as '0'
u = Bit is unchanged	x = Bit is unknown	-n/n = Value at POR and BOR/Value at all other Resets
'1' = Bit is set	'0' = Bit is cleared	

bit 7-0 **RC<7:0>**: PORTC General Purpose I/O Pin bits(1)
1 = Port pin is > VIH
0 = Port pin is < VIL

Note 1: RC<7:6> available on PIC16(L)F1828 only. Otherwise, they are unimplemented and read as '0'.

REGISTER 12-16: TRISC: PORTC TRI-STATE REGISTER

R/W-1/1	R/W-1/1	R/W-1/1	R/W-1/1	R/W-1/1	R/W-1/1	R/W-1/1	R/W-1/1
TRISC7(1)	TRISC6(1)	TRISC5	TRISC4	TRISC3	TRISC2	TRISC1	TRISC0
bit 7							bit 0

Legend:		
R = Readable bit	W = Writable bit	U = Unimplemented bit, read as '0'
u = Bit is unchanged	x = Bit is unknown	-n/n = Value at POR and BOR/Value at all other Resets
'1' = Bit is set	'0' = Bit is cleared	

bit 7-0 **TRISC<7:0>:** PORTC Tri-State Control bits(1)
1 = PORTC pin configured as an input (tri-stated)
0 = PORTC pin configured as an output

Note 1: TRISC<7:6> available on PIC16(L)F1828 only. Otherwise, they are unimplemented and read as '0'.

REGISTER 12-17: LATC: PORTC DATA LATCH REGISTER

R/W-x/u	R/W-x/u	R/W-x/u	R/W-x/u	R/W-x/u	R/W-x/u	R/W-x/u	R/W-x/u
LATC7(1)	LATC6(1)	LATC5	LATC4	LATC3	LATC2	LATC1	LATC0
bit 7							bit 0

Legend:		
R = Readable bit	W = Writable bit	U = Unimplemented bit, read as '0'
u = Bit is unchanged	x = Bit is unknown	-n/n = Value at POR and BOR/Value at all other Resets
'1' = Bit is set	'0' = Bit is cleared	

bit 7-0 **LATC<7:0>**: PORTC Output Latch Value bits(1, 2)

Note 1: Writes to PORTC are actually written to corresponding LATC register. Reads from PORTC register is return of actual I/O pin values.
2: LATC<7:6> available on PIC16(L)F1828 only. Otherwise, they are unimplemented and read as '0'.

© 2010-2015 Microchip Technology Inc.

REGISTER 12-18: ANSELC: PORTC ANALOG SELECT REGISTER

R/W-1/1	R/W-1/1	U-0	U-0	R/W-1/1	R/W-1/1	R/W-1/1	R/W-1/1
ANSC7(1)	ANSC6(1)	—	—	ANSC3	ANSC2	ANSC1	ANSC0
bit 7							bit 0

Legend:		
R = Readable bit	W = Writable bit	U = Unimplemented bit, read as '0'
u = Bit is unchanged	x = Bit is unknown	-n/n = Value at POR and BOR/Value at all other Resets
'1' = Bit is set	'0' = Bit is cleared	

bit 7-6 **ANSC<7:6>**: Analog Select between Analog or Digital Function on pins RC<3:0>, respectively(1)
0 = Digital I/O. Pin is assigned to port or digital special function.
1 = Analog input. Pin is assigned as analog input(1). Digital input buffer disabled.

bit 5-4 **Unimplemented:** Read as '0'

bit 3-0 **ANSC<3:0>**: Analog Select between Analog or Digital Function on pins RC<3:0>, respectively
0 = Digital I/O. Pin is assigned to port or digital special function.
1 = Analog input. Pin is assigned as analog input(1). Digital input buffer disabled.

Note 1: When setting a pin to an analog input, the corresponding TRIS bit must be set to Input mode in order to allow external control of the voltage on the pin.
2: ANSELC<7:6> available on PIC16(L)F1828 only. Otherwise, they are unimplemented and read as '0'.

REGISTER 12-19: WPUC: WEAK PULL-UP PORTC REGISTER

R/W-1/1	R/W-1/1	R/W-1/1	R/W-1/1	R/W-1/1	R/W-1/1	R/W-1/1	R/W-1/1
WPUC7(3)	WPUC6(3)	WPUC5	WPUC4	WPUC3	WPUC2	WPUC1	WPUC0
bit 7							bit 0

Legend:		
R = Readable bit	W = Writable bit	U = Unimplemented bit, read as '0'
u = Bit is unchanged	x = Bit is unknown	-n/n = Value at POR and BOR/Value at all other Resets
'1' = Bit is set	'0' = Bit is cleared	

bit 7-0 **WPUC<7:0>**: Weak Pull-up Register bits(1,2)
1 = Pull-up enabled
0 = Pull-up disabled

Note 1: Global $\overline{\text{WPUEN}}$ bit of the OPTION_REG register must be cleared for individual pull-ups to be enabled.
2: The weak pull-up device is automatically disabled if the pin is in configured as an output.
3: WPUC<7:6> available on PIC16(L)F1828 only. Otherwise, they are unimplemented and read as '0'.

REGISTER 12-20: INLVLC: PORTC INPUT LEVEL CONTROL REGISTER

U-0(3) R/W-1/1(2)	U-0(3) R/W-1/1(2)	R/W-0/0(3) R/W-1/1(2)	R/W-0/0(3) R/W-1/1(2)	R/W-0/0(3) R/W-1/1(2)	R/W-0/0(3) R/W-1/1(2)	R/W-0/0(3) R/W-1/1(2)	R/W-0/0(3) R/W-1/1(2)
INLVLC7(1)	INLVLC6(1)	INLVLC5	INLVLC4	INLVLC3	INLVLC2	INLVLC1	INLVLC0
bit 7							bit 0

Legend:		
R = Readable bit	W = Writable bit	U = Unimplemented bit, read as '0'
u = Bit is unchanged	x = Bit is unknown	-n/n = Value at POR and BOR/Value at all other Resets
'1' = Bit is set	'0' = Bit is cleared	

bit 7-0 **INLVLC<7:0>:** PORTC Input Level Select bits(1)
For RC<7:0> pins, respectively
1 = ST input used for PORT reads and Interrupt-on-Change
0 = TTL input used for PORT reads and Interrupt-on-Change

Note 1: INLVLC<7:6> available on PIC16(L)F1828 only. Otherwise, they are unimplemented and read as '0'.
2: PIC16(L)F1828 only, Reset default value.
3: PIC16(L)F1824 only, Reset default value.

TABLE 12-4: SUMMARY OF REGISTERS ASSOCIATED WITH PORTC

Name	Bit 7	Bit 6	Bit 5	Bit 4	Bit 3	Bit 2	Bit 1	Bit 0	Register on Page
ANSELC	ANSC7(1)	ANSC6(1)	—	—	ANSC3	ANSC2	ANSC1	ANSC0	133
INLVLC	INLVLC7(1)	INLVLC6(1)	INLVLC5	INLVLC4	INLVLC3	INLVLC2	INLVLC1	INLVLC0	134
LATC	LATC7(1)	LATC6(1)	LATC5	LATC4	LATC3	LATC2	LATC1	LATC0	132
PORTC	RC7(1)	RC6(1)	RC5	RC4	RC3	RC2	RC1	RC0	132
TRISC	TRISC7(1)	TRISC6(1)	TRISC5	TRISC4	TRISC3	TRISC2	TRISC1	TRISC0	132
WPUC	WPUC7(1)	WPUC6(1)	WPUC5	WPUC4	WPUC3	WPUC2	WPUC1	WPUC0	133

Legend: x = unknown, u = unchanged, - = unimplemented locations, read as '0'. Shaded cells are not used by PORTC.
Note 1: PIC16(L)F1828 only.

© 2010-2015 Microchip Technology Inc.

13.0 INTERRUPT-ON-CHANGE

The PORTA pins can be configured to operate as Interrupt-on-Change (IOC) pins. On the PIC16(L)F1828 devices, the PORTB pins can also be configured to operate as IOC pins. An interrupt can be generated by detecting a signal that has either a rising edge or a falling edge. Any individual port pin, or combination of port pins, can be configured to generate an interrupt. The interrupt-on-change module has the following features:

- Interrupt-on-change enable (Master Switch)
- Individual pin configuration
- Rising and falling edge detection
- Individual pin interrupt flags

Figure 13-1 is a block diagram of the IOC module.

13.1 Enabling the Module

To allow individual port pins to generate an interrupt, the IOCIE bit of the INTCON register must be set. If the IOCIE bit is disabled, the edge detection on the pin will still occur, but an interrupt will not be generated.

13.2 Individual Pin Configuration

For each port pin, a rising edge detector and a falling edge detector are present. To enable a pin to detect a rising edge, the associated bit of the IOCxP register is set. To enable a pin to detect a falling edge, the associated bit of the IOCxN register is set.

A pin can be configured to detect rising and falling edges simultaneously by setting both associated bits of the IOCxP and IOCxN registers, respectively.

13.3 Interrupt Flags

The IOCAFx and IOCBFx bits located in the IOCAF and IOCBF registers, respectively, are status flags that correspond to the interrupt-on-change pins of the associated port. If an expected edge is detected on an appropriately enabled pin, then the status flag for that pin will be set, and an interrupt will be generated if the IOCIE bit is set. The IOCIF bit of the INTCON register reflects the status of all IOCAFx and IOCBFx bits.

13.4 Clearing Interrupt Flags

The individual status flags, (IOCAFx and IOCBFx bits), can be cleared by resetting them to zero. If another edge is detected during this clearing operation, the associated status flag will be set at the end of the sequence, regardless of the value actually being written.

In order to ensure that no detected edge is lost while clearing flags, only AND operations masking out known changed bits should be performed. The following sequence is an example of what should be performed.

EXAMPLE 13-1: CLEARING INTERRUPT FLAGS (PORTA EXAMPLE)

```
MOVLW  0xff
XORWF  IOCAF, W
ANDWF  IOCAF, F
```

13.5 Operation in Sleep

The interrupt-on-change interrupt sequence will wake the device from Sleep mode, if the IOCIE bit is set.

If an edge is detected while in Sleep mode, the IOCxF register will be updated prior to the first instruction executed out of Sleep.

FIGURE 13-1: INTERRUPT-ON-CHANGE BLOCK DIAGRAM (PORTA EXAMPLE)

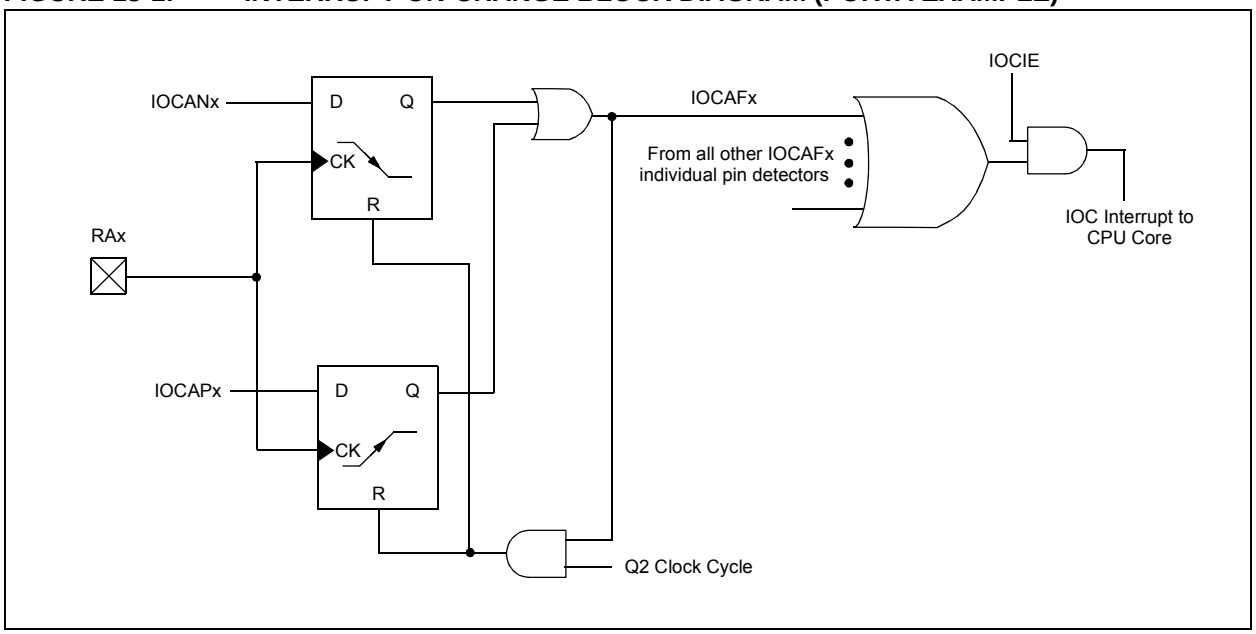

© 2010-2015 Microchip Technology Inc.

REGISTER 13-1: IOCAP: INTERRUPT-ON-CHANGE PORTA POSITIVE EDGE REGISTER

U-0	U-0	R/W-0/0	R/W-0/0	R/W-0/0	R/W-0/0	R/W-0/0	R/W-0/0
—	—	IOCAP5	IOCAP4	IOCAP3	IOCAP2	IOCAP1	IOCAP0
bit 7							bit 0

Legend:		
R = Readable bit	W = Writable bit	U = Unimplemented bit, read as '0'
u = Bit is unchanged	x = Bit is unknown	-n/n = Value at POR and BOR/Value at all other Resets
'1' = Bit is set	'0' = Bit is cleared	

bit 7-6 **Unimplemented:** Read as '0'

bit 5-0 **IOCAP<5:0>:** Interrupt-on-Change PORTA Positive Edge Enable bits
1 = Interrupt-on-Change enabled on the pin for a positive going edge. Associated Status bit and interrupt flag will be set upon detecting an edge.
0 = Interrupt-on-Change disabled for the associated pin.

REGISTER 13-2: IOCAN: INTERRUPT-ON-CHANGE PORTA NEGATIVE EDGE REGISTER

U-0	U-0	R/W-0/0	R/W-0/0	R/W-0/0	R/W-0/0	R/W-0/0	R/W-0/0
—	—	IOCAN5	IOCAN4	IOCAN3	IOCAN2	IOCAN1	IOCAN0
bit 7							bit 0

Legend:		
R = Readable bit	W = Writable bit	U = Unimplemented bit, read as '0'
u = Bit is unchanged	x = Bit is unknown	-n/n = Value at POR and BOR/Value at all other Resets
'1' = Bit is set	'0' = Bit is cleared	

bit 7-6 **Unimplemented:** Read as '0'

bit 5-0 **IOCAN<5:0>:** Interrupt-on-Change PORTA Negative Edge Enable bits
1 = Interrupt-on-Change enabled on the pin for a negative going edge. Associated Status bit and interrupt flag will be set upon detecting an edge.
0 = Interrupt-on-Change disabled for the associated pin.

REGISTER 13-3: IOCAF: INTERRUPT-ON-CHANGE PORTA FLAG REGISTER

U-0	U-0	R/W/HS-0/0	R/W/HS-0/0	R/W/HS-0/0	R/W/HS-0/0	R/W/HS-0/0	R/W/HS-0/0
—	—	IOCAF5	IOCAF4	IOCAF3	IOCAF2	IOCAF1	IOCAF0
bit 7							bit 0

Legend:		
R = Readable bit	W = Writable bit	U = Unimplemented bit, read as '0'
u = Bit is unchanged	x = Bit is unknown	-n/n = Value at POR and BOR/Value at all other Resets
'1' = Bit is set	'0' = Bit is cleared	HS - Bit is set in hardware

bit 7-6 **Unimplemented:** Read as '0'

bit 5-0 **IOCAF<5:0>:** Interrupt-on-Change PORTA Flag bits
1 = An enabled change was detected on the associated pin.
Set when IOCAPx = 1 and a rising edge was detected on RAx, or when IOCANx = 1 and a falling edge was detected on RAx.
0 = No change was detected, or the user cleared the detected change.

REGISTER 13-4: IOCBP: INTERRUPT-ON-CHANGE PORTB POSITIVE EDGE REGISTER (PIC16(L)F1828 ONLY)

R/W-0/0	R/W-0/0	R/W-0/0	R/W-0/0	U-0	U-0	U-0	U-0
IOCBP7	IOCBP6	IOCBP5	IOCBP4	—	—	—	—
bit 7							bit 0

Legend:		
R = Readable bit	W = Writable bit	U = Unimplemented bit, read as ‘0’
u = Bit is unchanged	x = Bit is unknown	-n/n = Value at POR and BOR/Value at all other Resets
‘1’ = Bit is set	‘0’ = Bit is cleared	

bit 7-4 **IOCBP<7:4>:** Interrupt-on-Change PORTB Positive Edge Enable bits
1 = Interrupt-on-Change enabled on the pin for a positive going edge. Associated Status bit and interrupt flag will be set upon detecting an edge.
0 = Interrupt-on-Change disabled for the associated pin.

bit 3-0 **Unimplemented:** Read as ‘0’

REGISTER 13-5: IOCBN: INTERRUPT-ON-CHANGE PORTB NEGATIVE EDGE REGISTER (PIC16(L)F1828 ONLY)

R/W-0/0	R/W-0/0	R/W-0/0	R/W-0/0	U-0	U-0	U-0	U-0
IOCBN7	IOCBN6	IOCBN5	IOCBN4	—	—	—	—
bit 7							bit 0

Legend:		
R = Readable bit	W = Writable bit	U = Unimplemented bit, read as ‘0’
u = Bit is unchanged	x = Bit is unknown	-n/n = Value at POR and BOR/Value at all other Resets
‘1’ = Bit is set	‘0’ = Bit is cleared	

bit 7-4 **IOCAN<7:4>:** Interrupt-on-Change PORTB Negative Edge Enable bits
1 = Interrupt-on-Change enabled on the pin for a negative going edge. Associated Status bit and interrupt flag will be set upon detecting an edge.
0 = Interrupt-on-Change disabled for the associated pin.

bit 3-0 **Unimplemented:** Read as ‘0’

© 2010-2015 Microchip Technology Inc.

REGISTER 13-6: IOCBF: INTERRUPT-ON-CHANGE PORTB FLAG REGISTER (PIC16(L)F1828 ONLY)

R/W-0/0	R/W-0/0	R/W-0/0	R/W-0/0	U-0	U-0	U-0	U-0
IOCBF7	IOCBF6	IOCBF5	IOCBF4	—	—	—	—
bit 7							bit 0

Legend:		
R = Readable bit	W = Writable bit	U = Unimplemented bit, read as '0'
u = Bit is unchanged	x = Bit is unknown	-n/n = Value at POR and BOR/Value at all other Resets
'1' = Bit is set	'0' = Bit is cleared	HS - Bit is set in hardware

bit 7-4 **IOCBF<7:4>:** Interrupt-on-Change PORTB Flag bits
1 = An enabled change was detected on the associated pin.
Set when IOCBPx = 1 and a rising edge was detected on RAx, or when IOCANx = 1 and a falling edge was detected on RBx.
0 = No change was detected, or the user cleared the detected change.

bit 3-0 **Unimplemented:** Read as '0'

TABLE 13-1: SUMMARY OF REGISTERS ASSOCIATED WITH INTERRUPT-ON-CHANGE

Name	Bit 7	Bit 6	Bit 5	Bit 4	Bit 3	Bit 2	Bit 1	Bit 0	Register on Page
ANSELA	—	—	—	ANSA4	—	ANSA2	ANSA1	ANSA0	122
ANSELB(1)	—	—	ANSB5	ANSB4	—	—	—	—	128
INLVLA	—	—	INLVLA5	INLVLA4	INLVLA3	INLVLA2	INLVLA1	INLVLA0	123
INLVLB(1)	INLVLB7	INLVLB6	INLVLB5	INLVLB4	—	—	—	—	128
INTCON	GIE	PEIE	TMR0IE	INTE	IOCIE	TMR0IF	INTF	IOCIF	89
IOCAF	—	—	IOCAF5	IOCAF4	IOCAF3	IOCAF2	IOCAF1	IOCAF0	137
IOCAN	—	—	IOCAN5	IOCAN4	IOCAN3	IOCAN2	IOCAN1	IOCAN0	137
IOCAP	—	—	IOCAP5	IOCAP4	IOCAP3	IOCAP2	IOCAP1	IOCAP0	137
IOCBF(1)	IOCBF7	IOCBF6	IOCBF5	IOCBF4	—	—	—	—	139
IOCBN(1)	IOCBN7	IOCBN6	IOCBN5	IOCBN4	—	—	—	—	138
IOCBP(1)	IOCBP7	IOCBP6	IOCBP5	IOCBP4	—	—	—	—	138
TRISA	—	—	TRISA5	TRISA4	TRISA3	TRISA2	TRISA1	TRISA0	121
TRISB(1)	TRISB7	TRISB6	TRISB5	TRISB4	—	—	—	—	127

Legend: — = unimplemented location, read as '0'. Shaded cells are not used by interrupt-on-change.

Note 1: PIC16(L)F1828 only.

14.0 FIXED VOLTAGE REFERENCE (FVR)

The Fixed Voltage Reference (FVR), is a stable voltage reference, independent of VDD, with 1.024V, 2.048V or 4.096V selectable output levels. The output of the FVR can be configured to supply a reference voltage to the following:

- ADC input channel
- ADC positive reference
- Comparator positive input
- Digital-to-Analog Converter (DAC)

The FVR can be enabled by setting the FVREN bit of the FVRCON register.

14.1 Independent Gain Amplifiers

The output of the FVR supplied to the ADC, Comparators, and DAC is routed through two independent programmable gain amplifiers. Each amplifier can be configured to amplify the reference voltage by 1x, 2x or 4x, to produce the three possible voltage levels.

The ADFVR<1:0> bits of the FVRCON register are used to enable and configure the gain amplifier settings for the reference supplied to the ADC module. Reference **Section 16.0 "Analog-to-Digital Converter (ADC) Module"** for additional information.

The CDAFVR<1:0> bits of the FVRCON register are used to enable and configure the gain amplifier settings for the reference supplied to the DAC and comparator module. Reference **Section 17.0 "Digital-to-Analog Converter (DAC) Module"** and **Section 19.0 "Comparator Module"** for additional information.

14.2 FVR Stabilization Period

When the Fixed Voltage Reference module is enabled, it requires time for the reference and amplifier circuits to stabilize. Once the circuits stabilize and are ready for use, the FVRRDY bit of the FVRCON register will be set. See **Section 30.0 "Electrical Specifications"** for the minimum delay requirement.

FIGURE 14-1: VOLTAGE REFERENCE BLOCK DIAGRAM

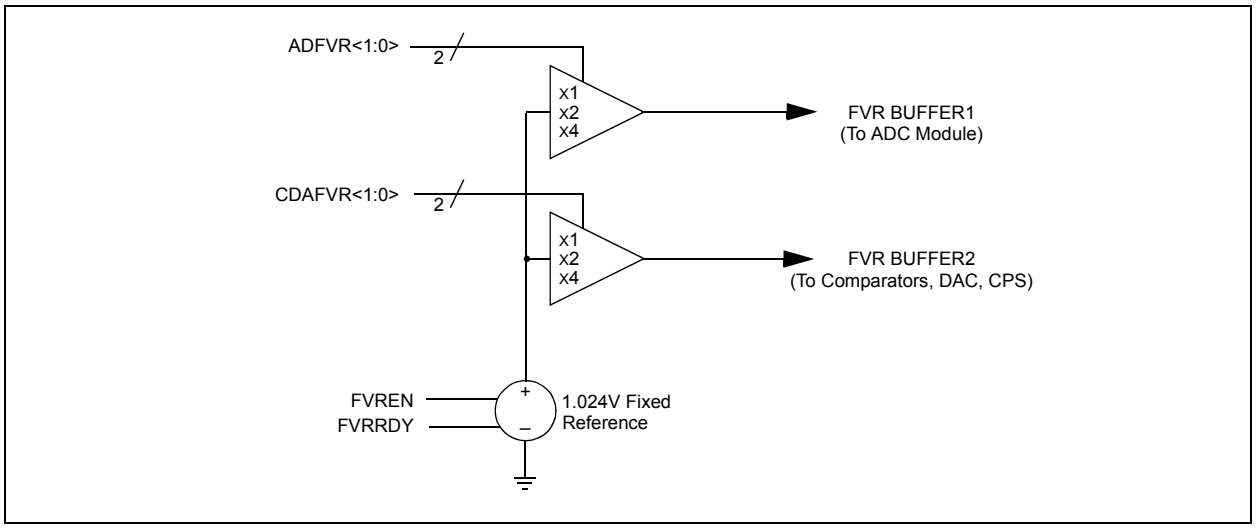

© 2010-2015 Microchip Technology Inc.

REGISTER 14-1: FVRCON: FIXED VOLTAGE REFERENCE CONTROL REGISTER

R/W-0/0	R-q/q	R/W-0/0	R/W-0/0	R/W-0/0	R/W-0/0	R/W-0/0	R/W-0/0
FVREN	FVRRDY(1)	TSEN	TSRNG	CDAFVR<1:0>		ADFVR<1:0>	
bit 7							bit 0

Legend:		
R = Readable bit	W = Writable bit	U = Unimplemented bit, read as '0'
u = Bit is unchanged	x = Bit is unknown	-n/n = Value at POR and BOR/Value at all other Resets
'1' = Bit is set	'0' = Bit is cleared	q = Value depends on condition

bit 7 **FVREN:** Fixed Voltage Reference Enable bit
0 = Fixed Voltage Reference is disabled
1 = Fixed Voltage Reference is enabled

bit 6 **FVRRDY:** Fixed Voltage Reference Ready Flag bit(1)
0 = Fixed Voltage Reference output is not ready or not enabled
1 = Fixed Voltage Reference output is ready for use

bit 5 **TSEN:** Temperature Indicator Enable bit(3)
0 = Temperature Indicator is disabled
1 = Temperature Indicator is enabled

bit 4 **TSRNG:** Temperature Indicator Range Selection bit(3)
0 = $V_{OUT} = V_{DD} - 2V_T$ (Low Range)
1 = $V_{OUT} = V_{DD} - 4V_T$ (High Range)

bit 3-2 **CDAFVR<1:0>:** Comparator and DAC Fixed Voltage Reference Selection bits
00 = Comparator and DAC Fixed Voltage Reference Peripheral output is off.
01 = Comparator and DAC Fixed Voltage Reference Peripheral output is 1x (1.024V)
10 = Comparator and DAC Fixed Voltage Reference Peripheral output is 2x (2.048V)(2)
11 = Comparator and DAC Fixed Voltage Reference Peripheral output is 4x (4.096V)(2)

bit 1-0 **ADFVR<1:0>:** ADC Fixed Voltage Reference Selection bits
00 = ADC Fixed Voltage Reference Peripheral output is off.
01 = ADC Fixed Voltage Reference Peripheral output is 1x (1.024V)
10 = ADC Fixed Voltage Reference Peripheral output is 2x (2.048V)(2)
11 = ADC Fixed Voltage Reference Peripheral output is 4x (4.096V)(2)

Note 1: FVRRDY is always '1' on devices with the LDO (PIC16F1824/8).
2: Fixed Voltage Reference output cannot exceed V_{DD}.
3: See **Section 15.0 "Temperature Indicator Module"** for additional information.

TABLE 14-1: SUMMARY OF REGISTERS ASSOCIATED WITH THE FIXED VOLTAGE REFERENCE

Name	Bit 7	Bit 6	Bit 5	Bit 4	Bit 3	Bit 2	Bit 1	Bit 0	Register on page
FVRCON	FVREN	FVRRDY	TSEN	TSRNG	CDAFVR<1:0>		ADFVR<1:0>		141

Legend: Shaded cells are unused by the Fixed Voltage Reference module.

15.0 TEMPERATURE INDICATOR MODULE

This family of devices is equipped with a temperature circuit designed to measure the operating temperature of the silicon die. The circuit's range of operating temperature falls between of -40°C and +85°C. The output is a voltage that is proportional to the device temperature. The output of the temperature indicator is internally connected to the device ADC.

The circuit may be used as a temperature threshold detector or a more accurate temperature indicator, depending on the level of calibration performed. A one-point calibration allows the circuit to indicate a temperature closely surrounding that point. A two-point calibration allows the circuit to sense the entire range of temperature more accurately. Reference Application Note AN1333, "*Use and Calibration of the Internal Temperature Indicator*" (DS01333) for more details regarding the calibration process.

15.1 Circuit Operation

Figure 15-1 shows a simplified block diagram of the temperature circuit. The proportional voltage output is achieved by measuring the forward voltage drop across multiple silicon junctions.

Equation 15-1 describes the output characteristics of the temperature indicator.

EQUATION 15-1: VOUT RANGES

High Range: $V_{OUT} = V_{DD} - 4V_T$

Low Range: $V_{OUT} = V_{DD} - 2V_T$

The temperature sense circuit is integrated with the Fixed Voltage Reference (FVR) module. See **Section 14.0 "Fixed Voltage Reference (FVR)"** for more information.

The circuit is enabled by setting the TSEN bit of the FVRCON register (Register 14-1). When disabled, the circuit draws no current.

The circuit operates in either high or low range. The high range, selected by setting the TSRNG bit of the FVRCON register, provides a wider output voltage. This provides more resolution over the temperature range, but may be less consistent from part to part. This range requires a higher bias voltage to operate and thus, a higher VDD is needed.

The low range is selected by clearing the TSRNG bit of the FVRCON register. The low range generates a lower voltage drop and thus, a lower bias voltage is needed to operate the circuit. The low range is provided for low voltage operation.

FIGURE 15-1: TEMPERATURE CIRCUIT DIAGRAM

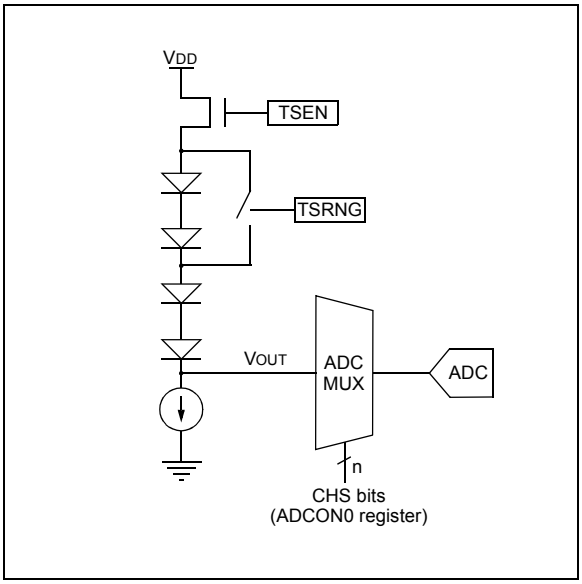

15.2 Minimum Operating VDD vs. Minimum Sensing Temperature

When the temperature circuit is operated in low range, the device may be operated at any operating voltage that is within specifications.

When the temperature circuit is operated in high range, the device operating voltage, VDD, must be high enough to ensure that the temperature circuit is correctly biased.

Table 15-1 shows the recommended minimum VDD vs. range setting.

TABLE 15-1: RECOMMENDED VDD VS. RANGE

Min. VDD, TSRNG = 1	Min. VDD, TSRNG = 0
3.6V	1.8V

15.3 Temperature Output

The output of the circuit is measured using the internal analog-to-digital converter. A channel is reserved for the temperature circuit output. Refer to **Section 16.0 "Analog-to-Digital Converter (ADC) Module"** for detailed information.

15.4 ADC Acquisition Time

To ensure accurate temperature measurements, the user must wait at least 200 µs after the ADC input multiplexer is connected to the temperature indicator output before the conversion is performed. In addition, the user must wait 200 µs between sequential conversions of the temperature indicator output.

© 2010-2015 Microchip Technology Inc.

16.0 ANALOG-TO-DIGITAL CONVERTER (ADC) MODULE

The Analog-to-Digital Converter (ADC) allows conversion of an analog input signal to a 10-bit binary representation of that signal. This device uses analog inputs, which are multiplexed into a single sample and hold circuit. The output of the sample and hold is connected to the input of the converter. The converter generates a 10-bit binary result via successive approximation and stores the conversion result into the ADC result registers (ADRESH:ADRESL register pair). Figure 16-1 shows the block diagram of the ADC.

The ADC voltage reference is software selectable to be either internally generated or externally supplied.

The ADC can generate an interrupt upon completion of a conversion. This interrupt can be used to wake-up the device from Sleep.

FIGURE 16-1: ADC BLOCK DIAGRAM

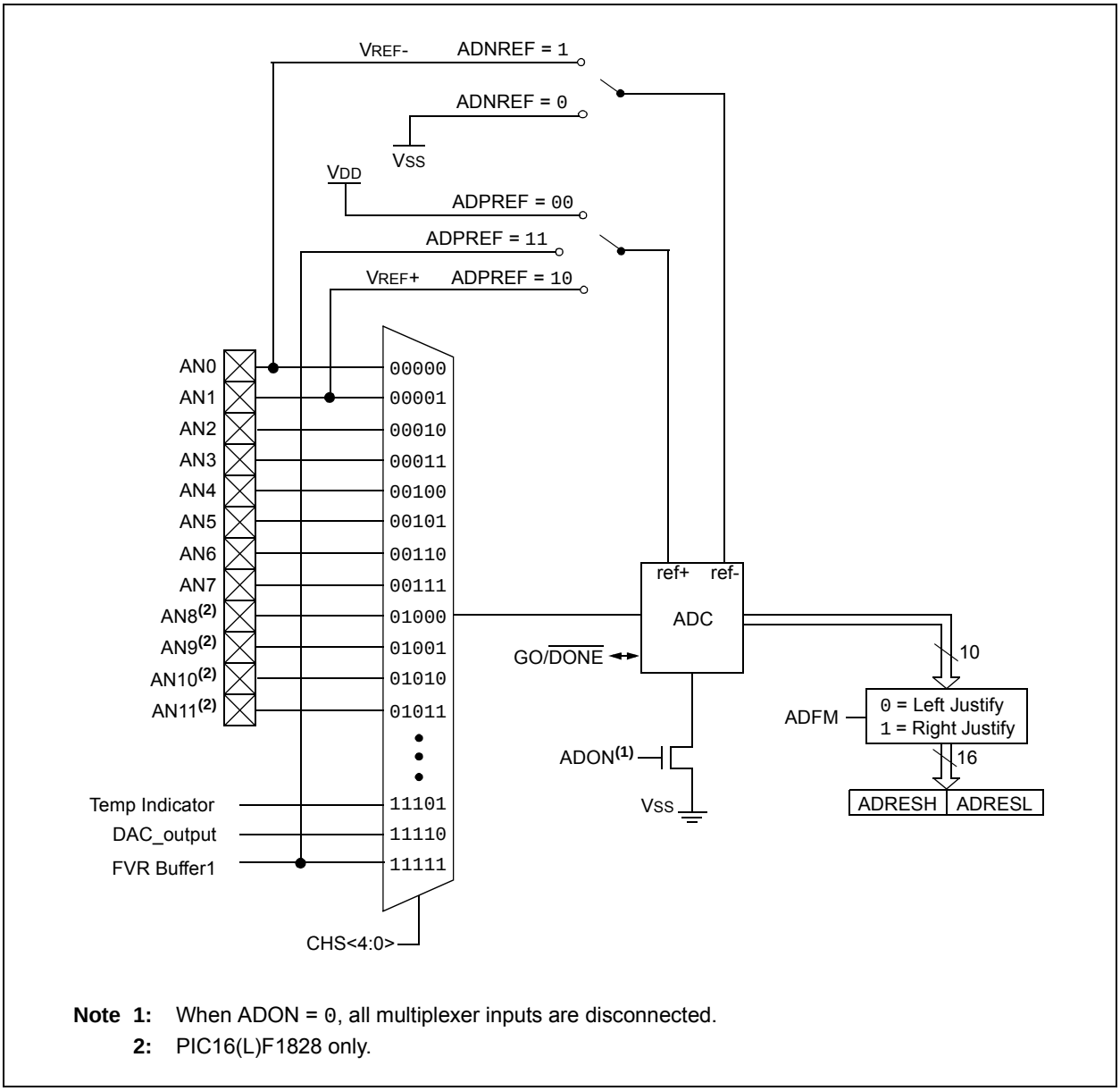

Note 1: When ADON = 0, all multiplexer inputs are disconnected.
2: PIC16(L)F1828 only.

16.1 ADC Configuration

When configuring and using the ADC the following functions must be considered:

- Port configuration
- Channel selection
- ADC voltage reference selection
- ADC conversion clock source
- Interrupt control
- Result formatting

16.1.1 PORT CONFIGURATION

The ADC can be used to convert both analog and digital signals. When converting analog signals, the I/O pin should be configured for analog by setting the associated TRIS and ANSEL bits. Refer to **Section 12.0 "I/O Ports"** for more information.

Note:	Analog voltages on any pin that is defined as a digital input may cause the input buffer to conduct excess current.

16.1.2 CHANNEL SELECTION

There are up to 14 channel selections available:

- AN<7:0> pins (PIC16(L)F1824 only)
- AN<11:0> pins (PIC16(L)F1828 only)
- DAC_output
- FVR Buffer1

Refer to **Section 17.0 "Digital-to-Analog Converter (DAC) Module"** and **Section 14.0 "Fixed Voltage Reference (FVR)"** for more information on these channel selections.

The CHS bits of the ADCON0 register determine which channel is connected to the sample and hold circuit.

When changing channels, a delay is required before starting the next conversion. Refer to **Section 16.2 "ADC Operation"** for more information.

16.1.3 ADC VOLTAGE REFERENCE

The ADPREF bits of the ADCON1 register provides control of the positive voltage reference. The positive voltage reference can be:

- VREF+ pin
- VDD
- FVR 2.028V
- FVR 4.096V (Not available on LF devices)

The ADNREF bits of the ADCON1 register provides control of the negative voltage reference. The negative voltage reference can be:

- VREF- pin
- VSS

See **Section 14.0 "Fixed Voltage Reference (FVR)"** for more details on the Fixed Voltage Reference.

16.1.4 CONVERSION CLOCK

The source of the conversion clock is software selectable via the ADCS bits of the ADCON1 register. There are seven possible clock options:

- FOSC/2
- FOSC/4
- FOSC/8
- FOSC/16
- FOSC/32
- FOSC/64
- FRC (dedicated internal oscillator)

The time to complete one bit conversion is defined as TAD. One full 10-bit conversion requires 11.5 TAD periods as shown in Figure 16-3.

For correct conversion, the appropriate TAD specification must be met. Refer to the A/D conversion requirements in **Section 30.0 "Electrical Specifications"** for more information. Table 16-1 gives examples of appropriate ADC clock selections.

Note:	Unless using the FRC, any changes in the system clock frequency will change the ADC clock frequency, which may adversely affect the ADC result.

© 2010-2015 Microchip Technology Inc.

TABLE 16-1: ADC CLOCK PERIOD (T_{AD}) VS. DEVICE OPERATING FREQUENCIES

ADC Clock Period (T_{AD})		Device Frequency (F_{OSC})					
ADC Clock Source	ADCS<2:0>	32 MHz	20 MHz	16 MHz	8 MHz	4 MHz	1 MHz
Fosc/2	000	62.5ns(2)	100 ns(2)	125 ns(2)	250 ns(2)	500 ns(2)	2.0 μs
Fosc/4	100	125 ns(2)	200 ns(2)	250 ns(2)	500 ns(2)	1.0 μs	4.0 μs
Fosc/8	001	0.5 μs(2)	400 ns(2)	0.5 μs(2)	1.0 μs	2.0 μs	8.0 μs(3)
Fosc/16	101	800 ns	800 ns	1.0 μs	2.0 μs	4.0 μs	16.0 μs(3)
Fosc/32	010	1.0 μs	1.6 μs	2.0 μs	4.0 μs	8.0 μs(3)	32.0 μs(3)
Fosc/64	110	2.0 μs	3.2 μs	4.0 μs	8.0 μs(3)	16.0 μs(3)	64.0 μs(3)
FRC	x11	1.0-6.0 μs(1,4)	1.0-6.0 μs(1,4)	1.0-6.0 μs(1,4)	1.0-6.0 μs(1,4)	1.0-6.0 μs(1,4)	1.0-6.0 μs(1,4)

Legend: Shaded cells are outside of recommended range.

Note 1: The FRC source has a typical TAD time of 1.6 μs for VDD.

2: These values violate the minimum required TAD time.

3: For faster conversion times, the selection of another clock source is recommended.

4: The ADC clock period (TAD) and total ADC conversion time can be minimized when the ADC clock is derived from the system clock FOSC. However, the FRC clock source must be used when conversions are to be performed with the device in Sleep mode.

FIGURE 16-2: ANALOG-TO-DIGITAL CONVERSION T_{AD} CYCLES

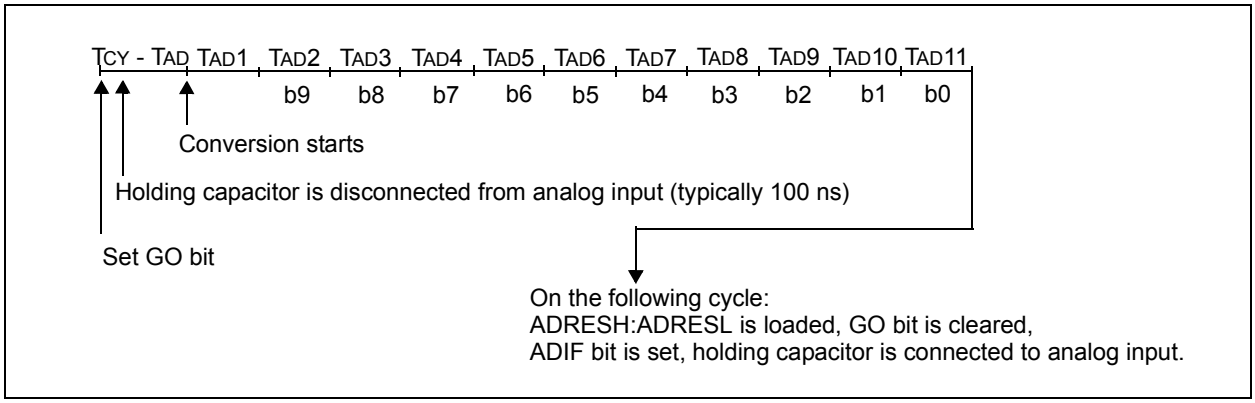

16.1.5 INTERRUPTS

The ADC module allows for the ability to generate an interrupt upon completion of an Analog-to-Digital conversion. The ADC Interrupt Flag is the ADIF bit in the PIR1 register. The ADC Interrupt Enable is the ADIE bit in the PIE1 register. The ADIF bit must be cleared in software.

Note 1:	The ADIF bit is set at the completion of every conversion, regardless of whether or not the ADC interrupt is enabled.
2:	The ADC operates during Sleep only when the FRC oscillator is selected.

This interrupt can be generated while the device is operating or while in Sleep. If the device is in Sleep, the interrupt will wake-up the device. Upon waking from Sleep, the next instruction following the SLEEP instruction is always executed. If the user is attempting to wake-up from Sleep and resume in-line code execution, the GIE and PEIE bits of the INTCON register must be disabled. If the GIE and PEIE bits of the INTCON register are enabled, execution will switch to the Interrupt Service Routine.

Please refer to **Section 16.1.5 "Interrupts"** for more information.

16.1.6 RESULT FORMATTING

The 10-bit A/D conversion result can be supplied in two formats, left justified or right justified. The ADFM bit of the ADCON1 register controls the output format.

Figure 16-3 shows the two output formats.

FIGURE 16-3: 10-BIT A/D CONVERSION RESULT FORMAT

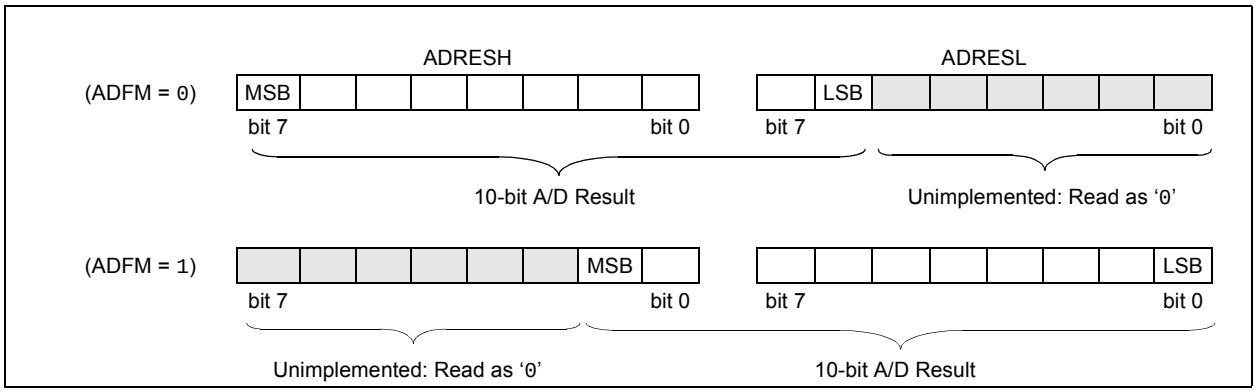

© 2010-2015 Microchip Technology Inc.

16.2 ADC Operation

16.2.1 STARTING A CONVERSION

To enable the ADC module, the ADON bit of the ADCON0 register must be set to a '1'. Setting the GO/$\overline{\text{DONE}}$ bit of the ADCON0 register to a '1' will start the Analog-to-Digital conversion.

Note:	The GO/$\overline{\text{DONE}}$ bit should not be set in the same instruction that turns on the ADC. Refer to **Section 16.2.6 "A/D Conversion Procedure"**.

16.2.2 COMPLETION OF A CONVERSION

When the conversion is complete, the ADC module will:

- Clear the GO/$\overline{\text{DONE}}$ bit
- Set the ADIF Interrupt Flag bit
- Update the ADRESH and ADRESL registers with new conversion result

16.2.3 TERMINATING A CONVERSION

If a conversion must be terminated before completion, the GO/$\overline{\text{DONE}}$ bit can be cleared in software. The ADRESH and ADRESL registers will be updated with the partially complete Analog-to-Digital conversion sample. Incomplete bits will match the last bit converted.

Note:	A device Reset forces all registers to their Reset state. Thus, the ADC module is turned off and any pending conversion is terminated.

16.2.4 ADC OPERATION DURING SLEEP

The ADC module can operate during Sleep. This requires the ADC clock source to be set to the FRC option. When the FRC clock source is selected, the ADC waits one additional instruction before starting the conversion. This allows the SLEEP instruction to be executed, which can reduce system noise during the conversion. If the ADC interrupt is enabled, the device will wake-up from Sleep when the conversion completes. If the ADC interrupt is disabled, the ADC module is turned off after the conversion completes, although the ADON bit remains set.

When the ADC clock source is something other than FRC, a SLEEP instruction causes the present conversion to be aborted and the ADC module is turned off, although the ADON bit remains set.

16.2.5 SPECIAL EVENT TRIGGER

The Special Event Trigger of the CCPx/ECCPX module allows periodic ADC measurements without software intervention. When this trigger occurs, the GO/$\overline{\text{DONE}}$ bit is set by hardware and the Timer1 counter resets to zero.

TABLE 16-2: SPECIAL EVENT TRIGGER

Device	CCPx/ECCPx
PIC16(L)F1824/8	CCP4

Using the Special Event Trigger does not assure proper ADC timing. It is the user's responsibility to ensure that the ADC timing requirements are met.

Refer to **Section 24.0 "Capture/Compare/PWM Modules"** for more information.

16.2.6 A/D CONVERSION PROCEDURE

This is an example procedure for using the ADC to perform an Analog-to-Digital conversion:

1. Configure Port:
   - Disable pin output driver (Refer to the TRIS register)
   - Configure pin as analog (Refer to the ANSEL register)
2. Configure the ADC module:
   - Select ADC conversion clock
   - Configure voltage reference
   - Select ADC input channel
   - Turn on ADC module
3. Configure ADC interrupt (optional):
   - Clear ADC interrupt flag
   - Enable ADC interrupt
   - Enable peripheral interrupt
   - Enable global interrupt(1)
4. Wait the required acquisition time(2).
5. Start conversion by setting the GO/$\overline{\text{DONE}}$ bit.
6. Wait for ADC conversion to complete by one of the following:
   - Polling the GO/$\overline{\text{DONE}}$ bit
   - Waiting for the ADC interrupt (interrupts enabled)
7. Read ADC Result.
8. Clear the ADC interrupt flag (required if interrupt is enabled).

Note 1: The global interrupt can be disabled if the user is attempting to wake-up from Sleep and resume in-line code execution.

2: Refer to **Section 16.3 "A/D Acquisition Requirements"**.

EXAMPLE 16-1: A/D CONVERSION

```
;This code block configures the ADC
;for polling, Vdd and Vss references, Frc
;clock and AN0 input.
;
;Conversion start & polling for completion
; are included.
;
BANKSEL   ADCON1       ;
MOVLW     B'11110000'  ;Right justify, Frc
                       ;clock
MOVWF     ADCON1       ;Vdd and Vss Vref
BANKSEL   TRISA        ;
BSF       TRISA,0      ;Set RA0 to input
BANKSEL   ANSEL        ;
BSF       ANSEL,0      ;Set RA0 to analog
BANKSEL   ADCON0       ;
MOVLW     B'00000001'  ;Select channel AN0
MOVWF     ADCON0       ;Turn ADC On
CALL      SampleTime   ;Acquisiton delay
BSF       ADCON0,ADGO  ;Start conversion
BTFSC     ADCON0,ADGO  ;Is conversion done?
GOTO      $-1          ;No, test again
BANKSEL   ADRESH       ;
MOVF      ADRESH,W     ;Read upper 2 bits
MOVWF     RESULTHI     ;store in GPR space
BANKSEL   ADRESL       ;
MOVF      ADRESL,W     ;Read lower 8 bits
MOVWF     RESULTLO     ;Store in GPR space
```


© 2010-2015 Microchip Technology Inc.

16.2.7 ADC REGISTER DEFINITIONS

The following registers are used to control the operation of the ADC.

REGISTER 16-1: ADCON0: A/D CONTROL REGISTER 0

U-0	R/W-0/0	R/W-0/0	R/W-0/0	R/W-0/0	R/W-0/0	R/W-0/0	R/W-0/0
—	CHS<4:0>					GO/$\overline{\text{DONE}}$	ADON
bit 7							bit 0

Legend:		
R = Readable bit	W = Writable bit	U = Unimplemented bit, read as ‘0’
u = Bit is unchanged	x = Bit is unknown	-n/n = Value at POR and BOR/Value at all other Resets
‘1’ = Bit is set	‘0’ = Bit is cleared	

bit 7 **Unimplemented:** Read as ‘0’

bit 6-2 **CHS<4:0>:** Analog Channel Select bits

00000 = AN0
00001 = AN1
00010 = AN2
00011 = AN3
00100 = AN4
00101 = AN5
00110 = AN6
00111 = AN7
01000 = AN8(3)
01001 = AN9(3)
01010 = AN10(3)
01011 = AN11(3)
01100 = Reserved. No channel connected
•
•
•
11100 = Reserved. No channel connected
11101 = Temperature Indicator
11110 = DAC_output(1)
11111 = FVR (Fixed Voltage Reference) Buffer 1 Output(2)

bit 1 **GO/$\overline{\text{DONE}}$:** A/D Conversion Status bit

1 = A/D conversion cycle in progress. Setting this bit starts an A/D conversion cycle.
This bit is automatically cleared by hardware when the A/D conversion has completed.
0 = A/D conversion completed/not in progress

bit 0 **ADON:** ADC Enable bit

1 = ADC is enabled
0 = ADC is disabled and consumes no operating current

Note 1: See **Section 17.0 “Digital-to-Analog Converter (DAC) Module”**for more information.
2: See **Section 14.0 “Fixed Voltage Reference (FVR)”** for more information.
3: PIC16(L)F1828 only.

REGISTER 16-2: ADCON1: A/D CONTROL REGISTER 1

R/W-0/0	R/W-0/0	R/W-0/0	R/W-0/0	U-0	R/W-0/0	R/W-0/0	R/W-0/0
ADFM	ADCS<2:0>			—	ADNREF	ADPREF<1:0>	
bit 7							bit 0

Legend:		
R = Readable bit	W = Writable bit	U = Unimplemented bit, read as '0'
u = Bit is unchanged	x = Bit is unknown	-n/n = Value at POR and BOR/Value at all other Resets
'1' = Bit is set	'0' = Bit is cleared	

bit 7 **ADFM:** A/D Result Format Select bit
- 1 = Right justified. Six Most Significant bits of ADRESH are set to '0' when the conversion result is loaded.
- 0 = Left justified. Six Least Significant bits of ADRESL are set to '0' when the conversion result is loaded.

bit 6-4 **ADCS<2:0>:** A/D Conversion Clock Select bits
- 000 = FOSC/2
- 001 = FOSC/8
- 010 = FOSC/32
- 011 = FRC (clock supplied from a dedicated RC oscillator)
- 100 = FOSC/4
- 101 = FOSC/16
- 110 = FOSC/64
- 111 = FRC (clock supplied from a dedicated RC oscillator)

bit 3 **Unimplemented**: Read as '0'

bit 2 **ADNREF**: A/D Negative Voltage Reference Configuration bit
- 0 = VREF- is connected to VSS
- 1 = VREF- is connected to external VREF- pin(1)

bit 1-0 **ADPREF<1:0>:** A/D Positive Voltage Reference Configuration bits
- 00 = VREF+ is connected to VDD
- 01 = Reserved
- 10 = VREF+ is connected to external VREF+ pin(1)
- 11 = VREF+ is connected to internal Fixed Voltage Reference (FVR) module

Note 1: When selecting the FVR or the VREF+ pin as the source of the positive reference, be aware that a minimum voltage specification exists. See **Section 30.0 "Electrical Specifications"** for details.

© 2010-2015 Microchip Technology Inc.

REGISTER 16-3: ADRESH: ADC RESULT REGISTER HIGH (ADRESH) ADFM = 0

R/W-x/u	R/W-x/u	R/W-x/u	R/W-x/u	R/W-x/u	R/W-x/u	R/W-x/u	R/W-x/u
ADRES<9:2>							
bit 7							bit 0

Legend:		
R = Readable bit	W = Writable bit	U = Unimplemented bit, read as ‘0’
u = Bit is unchanged	x = Bit is unknown	-n/n = Value at POR and BOR/Value at all other Resets
‘1’ = Bit is set	‘0’ = Bit is cleared	

bit 7-0 **ADRES<9:2>**: ADC Result Register bits
Upper eight bits of 10-bit conversion result

REGISTER 16-4: ADRESL: ADC RESULT REGISTER LOW (ADRESL) ADFM = 0

R/W-x/u	R/W-x/u	R/W-x/u	R/W-x/u	R/W-x/u	R/W-x/u	R/W-x/u	R/W-x/u
ADRES<1:0>		—	—	—	—	—	—
bit 7							bit 0

Legend:		
R = Readable bit	W = Writable bit	U = Unimplemented bit, read as ‘0’
u = Bit is unchanged	x = Bit is unknown	-n/n = Value at POR and BOR/Value at all other Resets
‘1’ = Bit is set	‘0’ = Bit is cleared	

bit 7-6 **ADRES<1:0>**: ADC Result Register bits
Lower 2 bits of 10-bit conversion result

bit 5-0 **Reserved**: Do not use.

REGISTER 16-5: ADRESH: ADC RESULT REGISTER HIGH (ADRESH) ADFM = 1

R/W-x/u	R/W-x/u	R/W-x/u	R/W-x/u	R/W-x/u	R/W-x/u	R/W-x/u	R/W-x/u
—	—	—	—	—	—	ADRES<9:8>	
bit 7							bit 0

Legend:		
R = Readable bit	W = Writable bit	U = Unimplemented bit, read as ‘0’
u = Bit is unchanged	x = Bit is unknown	-n/n = Value at POR and BOR/Value at all other Resets
‘1’ = Bit is set	‘0’ = Bit is cleared	

bit 7-2 **Reserved**: Do not use.

bit 1-0 **ADRES<9:8>**: ADC Result Register bits
Upper two bits of 10-bit conversion result

REGISTER 16-6: ADRESL: ADC RESULT REGISTER LOW (ADRESL) ADFM = 1

R/W-x/u	R/W-x/u	R/W-x/u	R/W-x/u	R/W-x/u	R/W-x/u	R/W-x/u	R/W-x/u
ADRES<7:0>							
bit 7							bit 0

Legend:		
R = Readable bit	W = Writable bit	U = Unimplemented bit, read as ‘0’
u = Bit is unchanged	x = Bit is unknown	-n/n = Value at POR and BOR/Value at all other Resets
‘1’ = Bit is set	‘0’ = Bit is cleared	

bit 7-0 **ADRES<7:0>**: ADC Result Register bits
Lower eight bits of 10-bit conversion result

© 2010-2015 Microchip Technology Inc.

16.3 A/D Acquisition Requirements

For the ADC to meet its specified accuracy, the charge holding capacitor (CHOLD) must be allowed to fully charge to the input channel voltage level. The Analog Input model is shown in Figure 16-4. The source impedance (RS) and the internal sampling switch (RSS) impedance directly affect the time required to charge the capacitor CHOLD. The sampling switch (RSS) impedance varies over the device voltage (VDD), refer to Figure 16-4. **The maximum recommended impedance for analog sources is 10 kΩ.** As the source impedance is decreased, the acquisition time may be decreased. After the analog input channel is selected (or changed), an A/D acquisition must be done before the conversion can be started. To calculate the minimum acquisition time, Equation 16-1 may be used. This equation assumes that 1/2 LSb error is used (1,024 steps for the ADC). The 1/2 LSb error is the maximum error allowed for the ADC to meet its specified resolution.

EQUATION 16-1: ACQUISITION TIME EXAMPLE

Assumptions: $Temperature = 50°C$ *and external impedance of* $10k\Omega$ *5.0V* V_{DD}

$$T_{ACQ} = \text{Amplifier Settling Time} + \text{Hold Capacitor Charging Time} + \text{Temperature Coefficient}$$
$$= T_{AMP} + T_C + T_{COFF}$$
$$= 2\mu s + T_C + [(Temperature - 25°C)(0.05\mu s/°C)]$$

The value for T_C *can be approximated with the following equations:*

$$V_{APPLIED}\left(1 - \frac{1}{(2^{n+1}) - 1}\right) = V_{CHOLD} \quad ;[1]\ V_{CHOLD}\ \text{charged to within 1/2 lsb}$$

$$V_{APPLIED}\left(1 - e^{\frac{-T_C}{RC}}\right) = V_{CHOLD} \quad ;[2]\ V_{CHOLD}\ \text{charge response to}\ V_{APPLIED}$$

$$V_{APPLIED}\left(1 - e^{\frac{-T_C}{RC}}\right) = V_{APPLIED}\left(1 - \frac{1}{(2^{n+1}) - 1}\right) \quad ;\text{combining [1] and [2]}$$

Note: Where n = number of bits of the ADC.

Solving for T_C*:*

$$T_C = -C_{HOLD}(R_{IC} + R_{SS} + R_S)\ ln(1/2047)$$
$$= -12.5pF(1k\Omega + 7k\Omega + 10k\Omega)\ ln(0.0004885)$$
$$= 1.72\mu s$$

Therefore:

$$T_{ACQ} = 2\mu s + 1.72\mu s + [(50°C - 25°C)(0.05\mu s/°C)]$$
$$= 4.97\mu s$$

Note 1: The reference voltage (VREF) has no effect on the equation, since it cancels itself out.

2: The charge holding capacitor (CHOLD) is not discharged after each conversion.

3: The maximum recommended impedance for analog sources is 10 kΩ. This is required to meet the pin leakage specification.

FIGURE 16-4: ANALOG INPUT MODEL

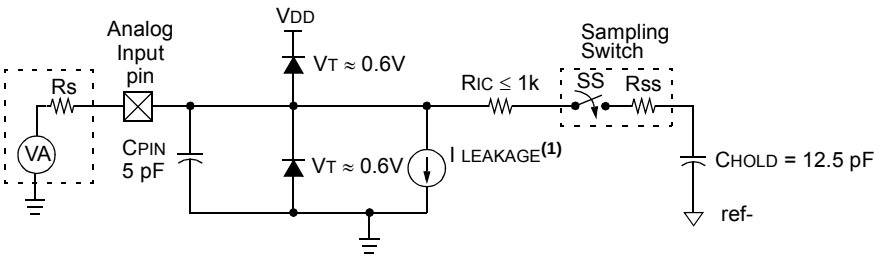

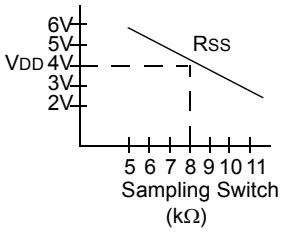

Legend:

CHOLD	=	Sample/Hold Capacitance
CPIN	=	Input Capacitance
I LEAKAGE	=	Leakage current at the pin due to various junctions
RIC	=	Interconnect Resistance
RSS	=	Resistance of Sampling Switch
SS	=	Sampling Switch
VT	=	Threshold Voltage

Note 1: Refer to **Section 30.0 "Electrical Specifications"**.

FIGURE 16-5: ADC TRANSFER FUNCTION

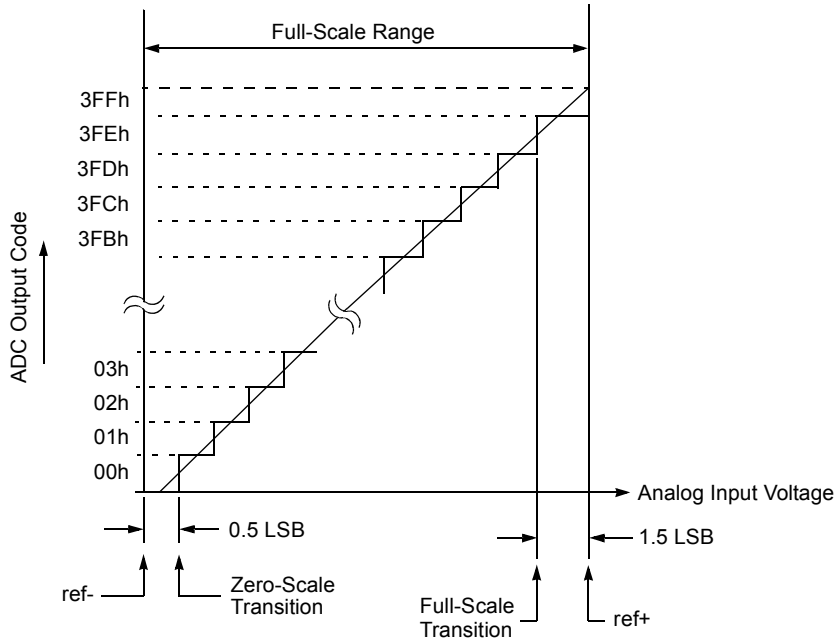

© 2010-2015 Microchip Technology Inc.

TABLE 16-3: SUMMARY OF REGISTERS ASSOCIATED WITH ADC

Name	Bit 7	Bit 6	Bit 5	Bit 4	Bit 3	Bit 2	Bit 1	Bit 0	Register on Page
ADCON0	—	CHS4	CHS3	CHS2	CHS1	CHS0	GO/$\overline{\text{DONE}}$	ADON	149
ADCON1	ADFM	ADCS<2:0>			—	ADNREF	ADPREF<1:0>		150
ADRESH	A/D Result Register High								151, 154
ADRESL	A/D Result Register Low								151, 154
ANSELA	—	—	—	ANSA4	—	ANSA2	ANSA1	ANSA0	122
ANSELB(1)	—	—	ANSB5	ANSB4	—	—	—	—	128
ANSELC	ANSC7(1)	ANSC6(1)	—	—	ANSC3	ANSC2	ANSC1	ANSC0	133
INLVLA	—	—	INLVLA5	INLVLA4	INLVLA3	INLVLA2	INLVLA1	INLVLA0	123
INLVLB(1)	INLVLA7	INLVLA6	INLVLA5	INLVLA4	—	—	—	—	128
INLVLC	INLVLC7(1)	INLVLC6(1)	INLVLC5	INLVLC4	INLVLC3	INLVLC2	INLVLC1	INLVLC0	134
INTCON	GIE	PEIE	TMR0IE	INTE	IOCIE	TMR0IF	INTF	IOCIF	89
PIE1	TMR1GIE	ADIE	RCIE	TXIE	SSP1IE	CCP1IE	TMR2IE	TMR1IE	90
PIR1	TMR1GIF	ADIF	RCIF	TXIF	SSP1IF	CCP1IF	TMR2IF	TMR1IF	93
TRISA	—	—	TRISA5	TRISA4	TRISA3	TRISA2	TRISA1	TRISA0	121
TRISB(1)	TRISB7	TRISB6	TRISB5	TRISB4	—	—	—	—	127
TRISC	TRISC7(1)	TRISC6(1)	TRISC5	TRISC4	TRISC3	TRISC2	TRISC1	TRISC0	132
FVRCON	FVREN	FVRRDY	TSEN	TSRNG	CDAFVR<1:0>		ADFVR<1:0>		141
DACCON0	DACEN	DACLPS	DACOE	—	DACPSS<1:0>		—	DACNSS	159
DACCON1	—	—	—	DACR<4:0>					159

Legend: x = unknown, u = unchanged, – = unimplemented, read as '0', q = value depends on condition. Shaded cells are not used for ADC module.

Note 1: PIC16(L)F1828 only.

17.0 DIGITAL-TO-ANALOG CONVERTER (DAC) MODULE

The Digital-to-Analog Converter supplies a variable voltage reference, ratiometric with the input source, with 32 selectable output levels.

The input of the DAC can be connected to:

- External VREF pins
- VDD supply voltage
- FVR Buffer2

The output of the DAC can be configured to supply a reference voltage to the following:

- Comparator positive input
- ADC input channel
- DACOUT pin

The Digital-to-Analog Converter (DAC) can be enabled by setting the DACEN bit of the DACCON0 register.

17.1 Output Voltage Selection

The DAC has 32 voltage level ranges. The 32 levels are set with the DACR<4:0> bits of the DACCON1 register.

The DAC output voltage is determined by the following equations:

EQUATION 17-1: DAC OUTPUT VOLTAGE

$$V_{OUT} = \left((V_{SOURCE+} - V_{SOURCE-}) \times \frac{DACR<4:0>}{2^5} \right) + V_{SRC-}$$

Note: VSOURCE+ can equal FVR Buffer 2, VDD or VREF+. VSOURCE- can equal VSS or VREF-.

17.2 Ratiometric Output Level

The DAC output value is derived using a resistor ladder with each end of the ladder tied to a positive and negative voltage reference input source. If the voltage of either input source fluctuates, a similar fluctuation will result in the DAC output value.

The value of the individual resistors within the ladder can be found in **Section 30.0 "Electrical Specifications"**.

17.3 DAC Voltage Reference Output

The DAC can be output to the DACOUT pin by setting the DACOE bit of the DACCON0 register to '1'. Selecting the DAC reference voltage for output on the DACOUT pin automatically overrides the digital output buffer and digital input threshold detector functions of that pin. Reading the DACOUT pin when it has been configured for DAC reference voltage output will always return a '0'.

Due to the limited current drive capability, a buffer must be used on the DAC voltage reference output for external connections to DACOUT. Figure 17-2 shows an example buffering technique.

© 2010-2015 Microchip Technology Inc.

FIGURE 17-1: DIGITAL-TO-ANALOG CONVERTER BLOCK DIAGRAM

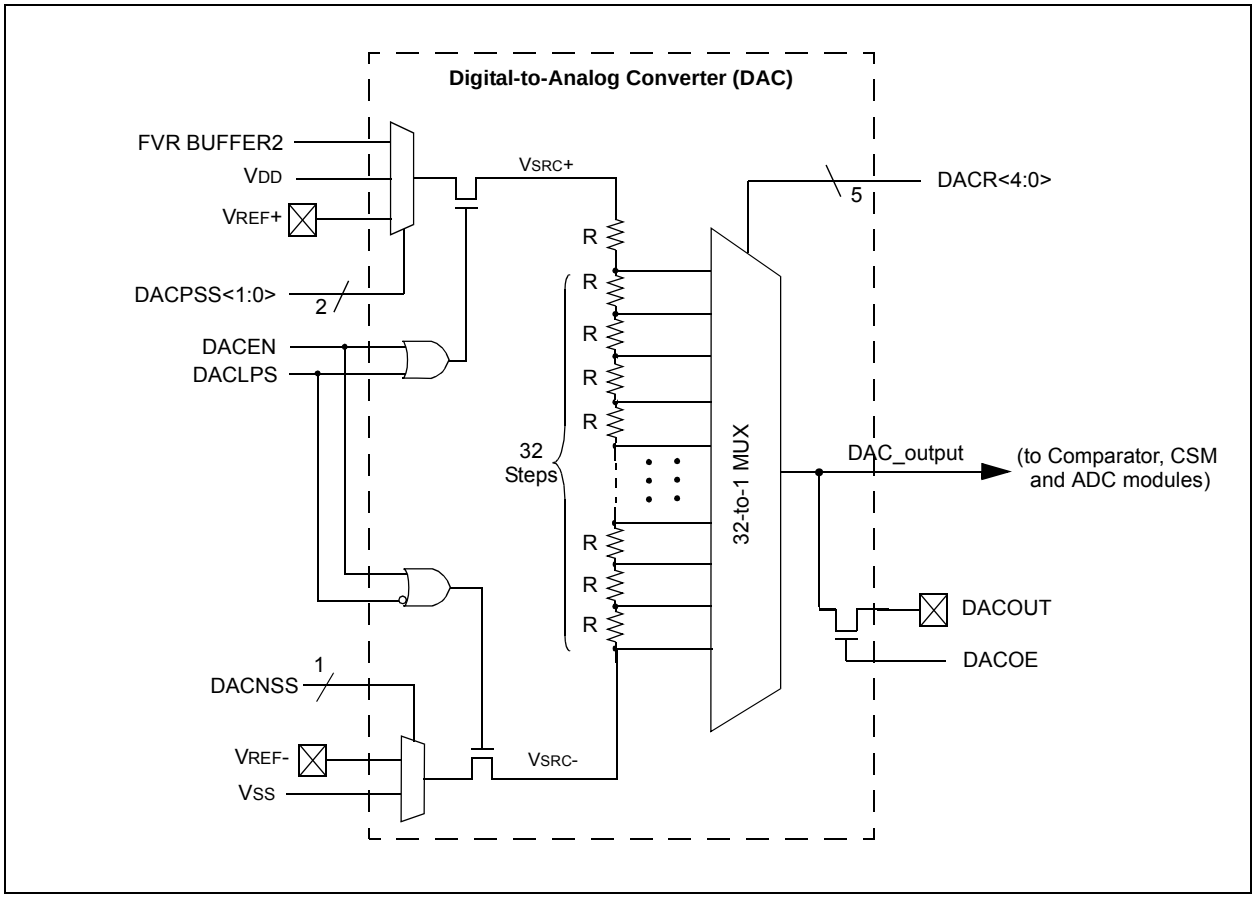

FIGURE 17-2: VOLTAGE REFERENCE OUTPUT BUFFER EXAMPLE

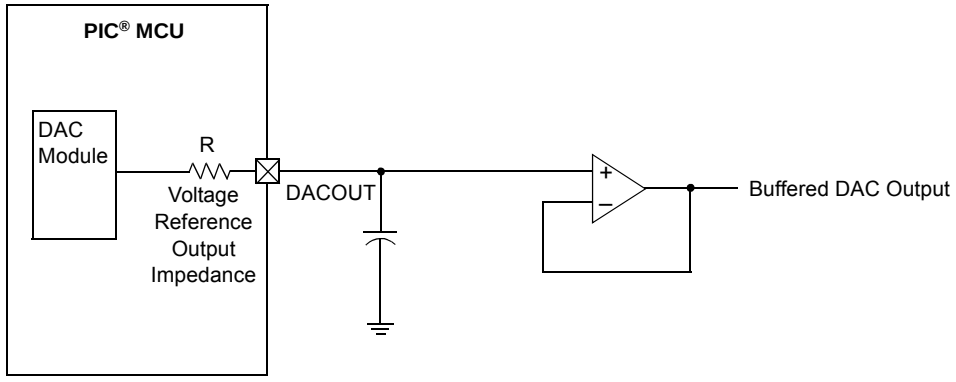

17.4 Low-Power Voltage State

In order for the DAC module to consume the least amount of power, one of the two voltage reference input sources to the resistor ladder must be disconnected. Either the positive voltage source, ($V_{SRC}+$), or the negative voltage source, ($V_{SRC}-$) can be disabled.

The negative voltage source is disabled by setting the DACLPS bit in the DACCON0 register. Clearing the DACLPS bit in the DACCON0 register disables the positive voltage source.

17.4.1 OUTPUT CLAMPED TO POSITIVE VOLTAGE SOURCE

The DAC output voltage can be set to $V_{SRC}+$ with the least amount of power consumption by performing the following:

- Clearing the DACEN bit in the DACCON0 register.
- Setting the DACLPS bit in the DACCON0 register.
- Configuring the DACPSS bits to the proper positive source.
- Configuring the DACR<4:0> bits to '11111' in the DACCON1 register.

This is also the method used to output the voltage level from the FVR to an output pin. See Figure 17-2 for more information.

Reference Figure 17-3 for output clamping examples.

17.4.2 OUTPUT CLAMPED TO NEGATIVE VOLTAGE SOURCE

The DAC output voltage can be set to $V_{SRC}-$ with the least amount of power consumption by performing the following:

- Clearing the DACEN bit in the DACCON0 register.
- Clearing the DACLPS bit in the DACCON0 register.
- Configuring the DACNSS bits to the proper negative source.
- Configuring the DACR<4:0> bits to '00000' in the DACCON1 register.

This allows the comparator to detect a zero-crossing while not consuming additional current through the DAC module.

Reference Figure 17-3 for output clamping examples.

FIGURE 17-3: OUTPUT VOLTAGE CLAMPING EXAMPLES

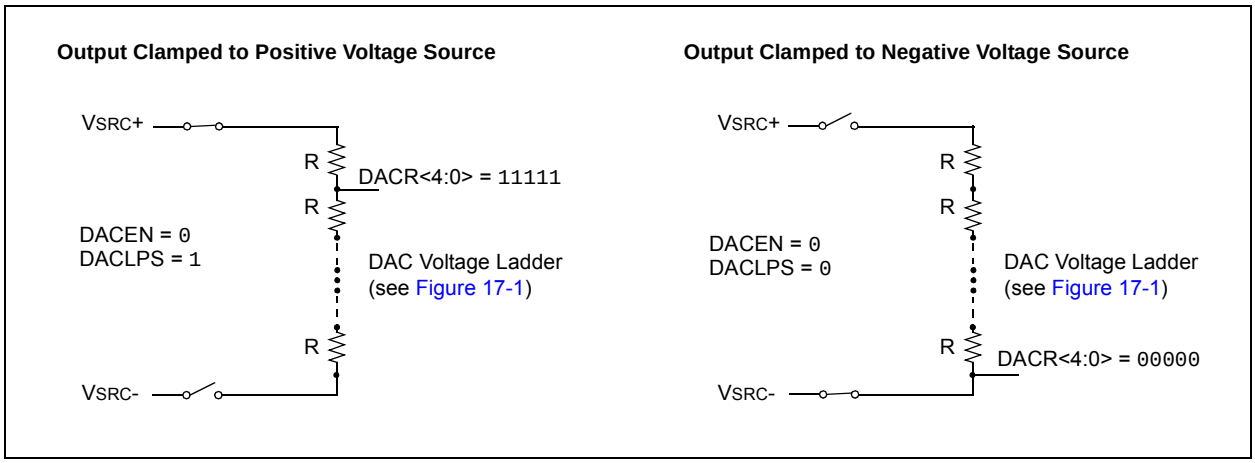

17.5 Operation During Sleep

When the device wakes up from Sleep through an interrupt or a Watchdog Timer time-out, the contents of the DACCON0 register are not affected. To minimize current consumption in Sleep mode, the voltage reference should be disabled.

17.6 Effects of a Reset

A device Reset affects the following:

- DAC is disabled.
- DAC output voltage is removed from the DACOUT pin.
- The DACR<4:0> range select bits are cleared.

© 2010-2015 Microchip Technology Inc.

REGISTER 17-1: DACCON0: VOLTAGE REFERENCE CONTROL REGISTER 0

R/W-0/0	R/W-0/0	R/W-0/0	U-0	R/W-0/0	R/W-0/0	U-0	U-0
DACEN	DACLPS	DACOE	—	DACPSS<1:0>		—	DACNSS
bit 7							bit 0

Legend:		
R = Readable bit	W = Writable bit	U = Unimplemented bit, read as '0'
u = Bit is unchanged	x = Bit is unknown	-n/n = Value at POR and BOR/Value at all other Resets
'1' = Bit is set	'0' = Bit is cleared	

bit 7 **DACEN:** DAC Enable bit
1 = DAC is enabled
0 = DAC is disabled

bit 6 **DACLPS:** DAC Low-Power Voltage State Select bit
1 = DAC Positive reference source selected
0 = DAC Negative reference source selected

bit 5 **DACOE:** DAC Voltage Output Enable bit
1 = DAC voltage level is also an output on the DACOUT pin
0 = DAC voltage level is disconnected from the DACOUT pin

bit 4 **Unimplemented:** Read as '0'

bit 3-2 **DACPSS<1:0>:** DAC Positive Source Select bits
00 = V_{DD}
01 = V_{REF+}
10 = FVR Buffer2 output
11 = Reserved, do not use

bit 1 **Unimplemented:** Read as '0'

bit 0 **DACNSS:** DAC Negative Source Select bit
1 = V_{REF-}
0 = V_{SS}

REGISTER 17-2: DACCON1: VOLTAGE REFERENCE CONTROL REGISTER 1

U-0	U-0	U-0	R/W-0/0	R/W-0/0	R/W-0/0	R/W-0/0	R/W-0/0
—	—	—	DACR<4:0>				
bit 7							bit 0

Legend:		
R = Readable bit	W = Writable bit	U = Unimplemented bit, read as '0'
u = Bit is unchanged	x = Bit is unknown	-n/n = Value at POR and BOR/Value at all other Resets
'1' = Bit is set	'0' = Bit is cleared	

bit 7-5 **Unimplemented:** Read as '0'

bit 4-0 **DACR<4:0>:** DAC Voltage Output Select bits
$V_{OUT} = ((V_{SRC+}) - (V_{SRC-}))*(DACR<4:0>/(2^5)) + V_{SRC-}$

Note 1: The output select bits are always right justified to ensure that any number of bits can be used without affecting the register layout.

TABLE 17-1: SUMMARY OF REGISTERS ASSOCIATED WITH THE DAC MODULE

Name	Bit 7	Bit 6	Bit 5	Bit 4	Bit 3	Bit 2	Bit 1	Bit 0	Register on page
FVRCON	FVREN	FVRRDY	TSEN	TSRNG	CDAFVR<1:0>		ADFVR<1:0>		141
DACCON0	DACEN	DACLPS	DACOE	—	DACPSS<1:0>		—	DACNSS	159
DACCON1	—	—	—	DACR<4:0>					159

Legend: — = unimplemented, read as '0'. Shaded cells are unused by the DAC module.

© 2010-2015 Microchip Technology Inc.

18.0 SR LATCH

The module consists of a single SR latch with multiple Set and Reset inputs as well as separate latch outputs. The SR latch module includes the following features:

- Programmable input selection
- SR latch output is available externally
- Separate Q and $\overline{Q}$ outputs
- Firmware Set and Reset

The SR latch can be used in a variety of analog applications, including oscillator circuits, one-shot circuit, hysteretic controllers, and analog timing applications.

18.1 Latch Operation

The latch is a Set-Reset latch that does not depend on a clock source. Each of the Set and Reset inputs are active-high. The latch can be Set or Reset by:

- Software control (SRPS and SRPR bits)
- Comparator C1 output (sync_C1OUT)
- Comparator C2 output (sync_C2OUT)
- SRI pin
- Programmable clock (SRCLK)

The SRPS and the SRPR bits of the SRCON0 register may be used to Set or Reset the SR latch, respectively. The latch is Reset-dominant. Therefore, if both Set and Reset inputs are high, the latch will go to the Reset state. Both the SRPS and SRPR bits are self resetting which means that a single write to either of the bits is all that is necessary to complete a latch Set or Reset operation.

The output from Comparator C1 or C2 can be used as the Set or Reset inputs of the SR latch. The output of either Comparator can be synchronized to the Timer1 clock source. See **Section 19.0 "Comparator Module"** and **Section 21.0 "Timer1 Module with Gate Control"** for more information.

An external source on the SRI pin can be used as the Set or Reset inputs of the SR latch.

An internal clock source is available that can periodically set or reset the SR latch. The SRCLK<2:0> bits in the SRCON0 register are used to select the clock source period. The SRSCKE and SRRCKE bits of the SRCON1 register enable the clock source to Set or Reset the SR latch, respectively.

18.2 Latch Output

The SRQEN and SRNQEN bits of the SRCON0 register control the Q and $\overline{Q}$ latch outputs. Both of the SR latch outputs may be directly output to an I/O pin at the same time.

The applicable TRIS bit of the corresponding port must be cleared to enable the port pin output driver.

18.3 Effects of a Reset

Upon any device Reset, the SR latch output is not initialized to a known state. The user's firmware is responsible for initializing the latch output before enabling the output pins.

FIGURE 18-1: SR LATCH SIMPLIFIED BLOCK DIAGRAM

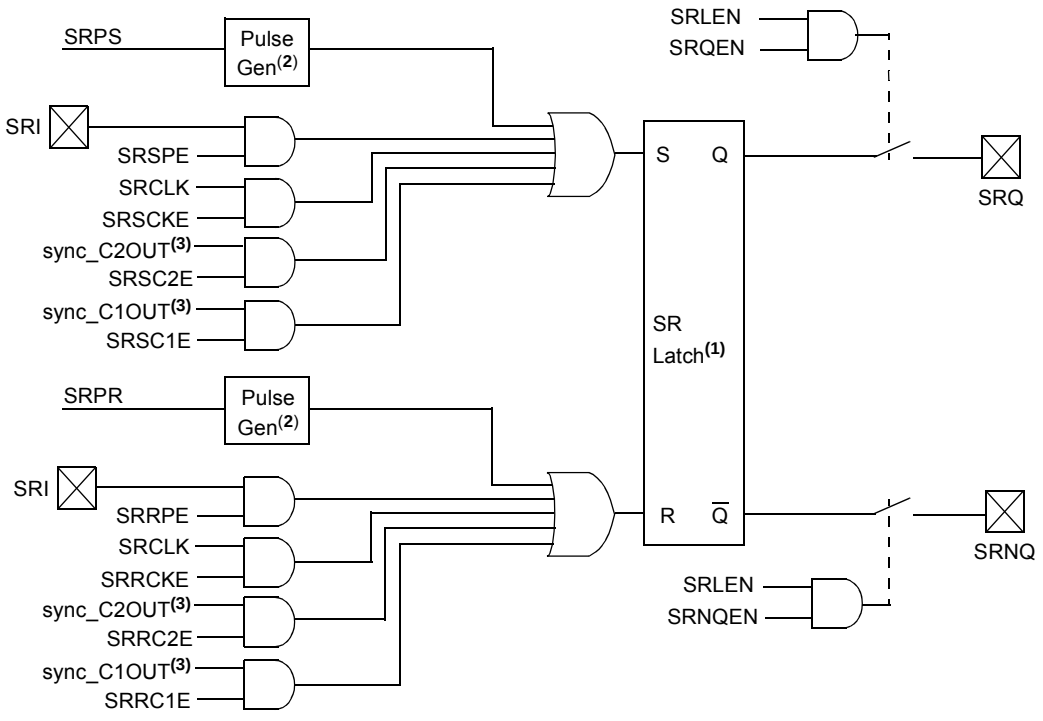

Note 1: If R = 1 and S = 1 simultaneously, Q = 0, $\overline{Q}$ = 1
2: Pulse generator causes a 1 Q-state pulse width.
3: Name denotes the connection point at the comparator output.

© 2010-2015 Microchip Technology Inc.

TABLE 18-1: SRCLK FREQUENCY TABLE

SRCLK	Divider	Fosc = 32 MHz	Fosc = 20 MHz	Fosc = 16 MHz	Fosc = 4 MHz	Fosc = 1 MHz
111	512	62.5 kHz	39.0 kHz	31.3 kHz	7.81 kHz	1.95 kHz
110	256	125 kHz	78.1 kHz	62.5 kHz	15.6 kHz	3.90 kHz
101	128	250 kHz	156 kHz	125 kHz	31.25 kHz	7.81 kHz
100	64	500 kHz	313 kHz	250 kHz	62.5 kHz	15.6 kHz
011	32	1 MHz	625 kHz	500 kHz	125 kHz	31.3 kHz
010	16	2 MHz	1.25 MHz	1 MHz	250 kHz	62.5 kHz
001	8	4 MHz	2.5 MHz	2 MHz	500 kHz	125 kHz
000	4	8 MHz	5 MHz	4 MHz	1 MHz	250 kHz

REGISTER 18-1: SRCON0: SR LATCH CONTROL 0 REGISTER

R/W-0/0	R/W-0/0	R/W-0/0	R/W-0/0	R/W-0/0	R/W-0/0	R/S-0/0	R/S-0/0
SRLEN	SRCLK<2:0>			SRQEN	SRNQEN	SRPS	SRPR
bit 7							bit 0

Legend:		
R = Readable bit	W = Writable bit	U = Unimplemented bit, read as '0'
u = Bit is unchanged	x = Bit is unknown	-n/n = Value at POR and BOR/Value at all other Resets
'1' = Bit is set	'0' = Bit is cleared	S = Bit is set only

bit 7 **SRLEN:** SR Latch Enable bit
1 = SR latch is enabled
0 = SR latch is disabled

bit 6-4 **SRCLK<2:0>:** SR Latch Clock Divider bits
000 = Generates a 1 FOSC wide pulse every 4th FOSC cycle clock
001 = Generates a 1 FOSC wide pulse every 8th FOSC cycle clock
010 = Generates a 1 FOSC wide pulse every 16th FOSC cycle clock
011 = Generates a 1 FOSC wide pulse every 32nd FOSC cycle clock
100 = Generates a 1 FOSC wide pulse every 64th FOSC cycle clock
101 = Generates a 1 FOSC wide pulse every 128th FOSC cycle clock
110 = Generates a 1 FOSC wide pulse every 256th FOSC cycle clock
111 = Generates a 1 FOSC wide pulse every 512th FOSC cycle clock

bit 3 **SRQEN:** SR Latch Q Output Enable bit
If SRLEN = 1:
1 = Q is present on the SRQ pin
0 = External Q output is disabled
If SRLEN = 0:
SR latch is disabled

bit 2 **SRNQEN:** SR Latch $\overline{Q}$ Output Enable bit
If SRLEN = 1:
1 = $\overline{Q}$ is present on the SRnQ pin
0 = External $\overline{Q}$ output is disabled
If SRLEN = 0:
SR latch is disabled

bit 1 **SRPS:** Pulse Set Input of the SR Latch bit(1)
1 = Pulse set input for 1 Q-clock period
0 = No effect on set input.

bit 0 **SRPR:** Pulse Reset Input of the SR Latch bit(1)
1 = Pulse reset input for 1 Q-clock period
0 = No effect on reset input.

Note 1: Set only, always reads back '0'.

REGISTER 18-2: SRCON1: SR LATCH CONTROL 1 REGISTER

R/W-0/0	R/W-0/0	R/W-0/0	R/W-0/0	R/W-0/0	R/W-0/0	R/W-0/0	R/W-0/0
SRSPE	SRSCKE	SRSC2E	SRSC1E	SRRPE	SRRCKE	SRRC2E	SRRC1E
bit 7							bit 0

Legend:		
R = Readable bit	W = Writable bit	U = Unimplemented bit, read as '0'
u = Bit is unchanged	x = Bit is unknown	-n/n = Value at POR and BOR/Value at all other Resets
'1' = Bit is set	'0' = Bit is cleared	

bit 7 **SRSPE:** SR Latch Peripheral Set Enable bit
1 = SR latch is set when the SRI pin is high
0 = SRI pin has no effect on the set input of the SR latch

bit 6 **SRSCKE:** SR Latch Set Clock Enable bit
1 = Set input of SR latch is pulsed with SRCLK
0 = SRCLK has no effect on the set input of the SR latch

bit 5 **SRSC2E:** SR Latch C2 Set Enable bit
1 = SR latch is set when the C2 Comparator output is high
0 = C2 Comparator output has no effect on the set input of the SR latch

bit 4 **SRSC1E:** SR Latch C1 Set Enable bit
1 = SR latch is set when the C1 Comparator output is high
0 = C1 Comparator output has no effect on the set input of the SR latch

bit 3 **SRRPE:** SR Latch Peripheral Reset Enable bit
1 = SR latch is reset when the SRI pin is high
0 = SRI pin has no effect on the reset input of the SR latch

bit 2 **SRRCKE:** SR Latch Reset Clock Enable bit
1 = Reset input of SR latch is pulsed with SRCLK
0 = SRCLK has no effect on the reset input of the SR latch

bit 1 **SRRC2E:** SR Latch C2 Reset Enable bit
1 = SR latch is reset when the C2 Comparator output is high
0 = C2 Comparator output has no effect on the reset input of the SR latch

bit 0 **SRRC1E:** SR Latch C1 Reset Enable bit
1 = SR latch is reset when the C1 Comparator output is high
0 = C1 Comparator output has no effect on the reset input of the SR latch

© 2010-2015 Microchip Technology Inc.

TABLE 18-2: SUMMARY OF REGISTERS ASSOCIATED WITH SR LATCH MODULE

Name	Bit 7	Bit 6	Bit 5	Bit 4	Bit 3	Bit 2	Bit 1	Bit 0	Register on Page
ANSELA	—	—	—	ANSA4	—	ANSA2	ANSA1	ANSA0	122
INLVLA	—	—	INLVLA5	INLVLA4	INLVLA3	INLVLA2	INLVLA1	INLVLA0	123
INLVLC	INLVLC7(1)	INLVLC6(1)	INLVLC5	INLVLC4	INLVLC3	INLVLC2	INLVLC1	INLVLC0	134
SRCON0	SRLEN	SRCLK<2:0>			SRQEN	SRNQEN	SRPS	SRPR	163
SRCON1	SRSPE	SRSCKE	SRSC2E	SRSC1E	SRRPE	SRRCKE	SRRC2E	SRRC1E	163
TRISA	—	—	TRISA5	TRISA4	TRISA3	TRISA2	TRISA1	TRISA0	121
TRISC	TRISC7(1)	TRISC6(1)	TRISC5	TRISC4	TRISC3	TRISC2	TRISC1	TRISC0	132

Legend: — = unimplemented, read as '0'. Shaded cells are unused by the SR latch module.
Note 1: PIC16(L)F1828 only.

19.0 COMPARATOR MODULE

Comparators are used to interface analog circuits to a digital circuit by comparing two analog voltages and providing a digital indication of their relative magnitudes. Comparators are very useful mixed signal building blocks because they provide analog functionality independent of program execution. The analog comparator module includes the following features:

- Independent comparator control
- Programmable input selection
- Comparator output is available internally/externally
- Programmable output polarity
- Interrupt-on-change
- Wake-up from Sleep
- Programmable Speed/Power optimization
- PWM shutdown
- Programmable and Fixed Voltage Reference

19.1 Comparator Overview

A single comparator is shown in Figure 19-1 along with the relationship between the analog input levels and the digital output. When the analog voltage at VIN+ is less than the analog voltage at VIN-, the output of the comparator is a digital low level. When the analog voltage at VIN+ is greater than the analog voltage at VIN-, the output of the comparator is a digital high level.

FIGURE 19-1: SINGLE COMPARATOR

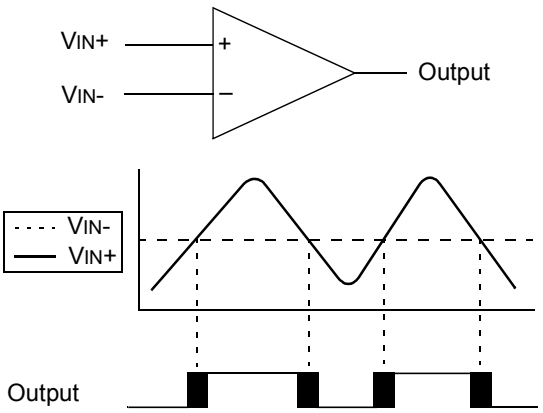

Note: The black areas of the output of the comparator represents the uncertainty due to input offsets and response time.

FIGURE 19-2: COMPARATOR MODULE SIMPLIFIED BLOCK DIAGRAM

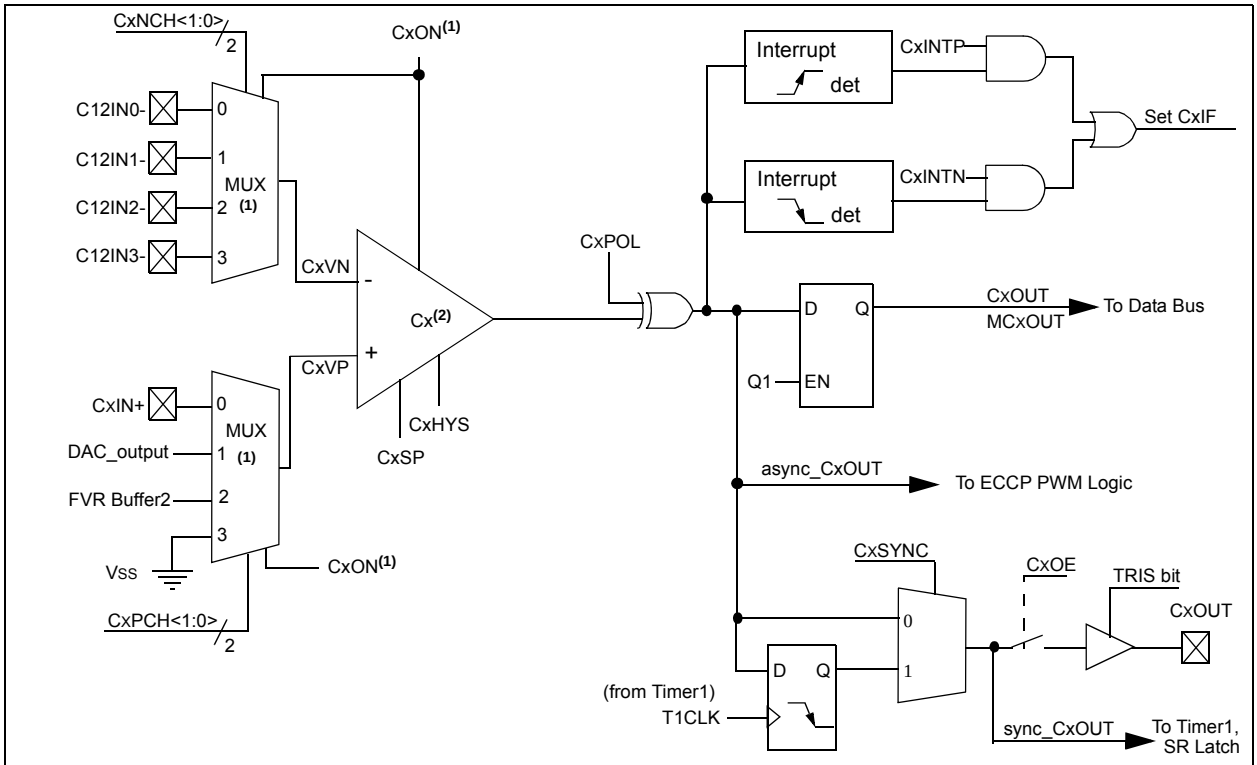

Note 1: When CxON = 0, all multiplexer inputs are disconnected and the Comparator will produce a '0' at the output.
2: Output of comparator can be frozen during debugging.

© 2010-2015 Microchip Technology Inc.

19.2 Comparator Control

Each comparator has two control registers: CMxCON0 and CMxCON1.

The CMxCON0 registers (see Register 19-1) contain Control and Status bits for the following:

- Enable
- Output selection
- Output polarity
- Speed/Power selection
- Hysteresis enable
- Output synchronization

The CMxCON1 registers (see Register 19-2) contain Control bits for the following:

- Interrupt enable
- Interrupt edge polarity
- Positive input channel selection
- Negative input channel selection

19.2.1 COMPARATOR ENABLE

Setting the CxON bit of the CMxCON0 register enables the comparator for operation. Clearing the CxON bit disables the comparator resulting in minimum current consumption.

19.2.2 COMPARATOR OUTPUT SELECTION

The output of the comparator can be monitored by reading either the CxOUT bit of the CMxCON0 register or the MCxOUT bit of the CMOUT register. In order to make the output available for an external connection, the following conditions must be true:

- CxOE bit of the CMxCON0 register must be set
- Corresponding TRIS bit must be cleared
- CxON bit of the CMxCON0 register must be set

Note 1:	The CxOE bit of the CMxCON0 register overrides the PORT data latch. Setting the CxON bit of the CMxCON0 register has no impact on the port override.
2:	The internal output of the comparator is latched with each instruction cycle. Unless otherwise specified, external outputs are not latched.

19.2.3 COMPARATOR OUTPUT POLARITY

Inverting the output of the comparator is functionally equivalent to swapping the comparator inputs. The polarity of the comparator output can be inverted by setting the CxPOL bit of the CMxCON0 register. Clearing the CxPOL bit results in a non-inverted output.

Table 19-1 shows the output state versus input conditions, including polarity control.

TABLE 19-1: COMPARATOR OUTPUT STATE VS. INPUT CONDITIONS

Input Condition	CxPOL	CxOUT
CxVN > CxVP	0	0
CxVN < CxVP	0	1
CxVN > CxVP	1	1
CxVN < CxVP	1	0

19.2.4 COMPARATOR SPEED/POWER SELECTION

The trade-off between speed or power can be optimized during program execution with the CxSP control bit. The default state for this bit is '1' which selects the Normal Speed mode. Device power consumption can be optimized at the cost of slower comparator propagation delay by clearing the CxSP bit to '0'.

19.3 Comparator Hysteresis

A selectable amount of separation voltage can be added to the input pins of each comparator to provide a hysteresis function to the overall operation. Hysteresis is enabled by setting the CxHYS bit of the CMxCON0 register.

See **Section 30.0 "Electrical Specifications"** for more information.

19.4 Timer1 Gate Operation

The output resulting from a comparator operation can be used as a source for gate control of Timer1. See **Section 21.6 "Timer1 Gate"** for more information. This feature is useful for timing the duration or interval of an analog event.

It is recommended that the comparator output be synchronized to Timer1. This ensures that Timer1 does not increment while a change in the comparator is occurring.

19.4.1 COMPARATOR OUTPUT SYNCHRONIZATION

The output from either comparator, C1 or C2, can be synchronized with Timer1 by setting the CxSYNC bit of the CMxCON0 register.

Once enabled, the comparator output is latched on the falling edge of the Timer1 source clock. If a prescaler is used with Timer1, the comparator output is latched after the prescaling function. To prevent a race condition, the comparator output is latched on the falling edge of the Timer1 clock source and Timer1 increments on the rising edge of its clock source. See the Comparator Block Diagrams (Figure 19-2 and Figure 19-2) and the Timer1 Block Diagram (Figure 20-1) for more information.

19.5 Comparator Interrupt

An interrupt can be generated upon a change in the output value of the comparator for each comparator, a rising edge detector and a Falling edge detector are present.

When either edge detector is triggered and its associated enable bit is set (CxINTP and/or CxINTN bits of the CMxCON1 register), the Corresponding Interrupt Flag bit (CxIF bit of the PIR2 register) will be set.

To enable the interrupt, you must set the following bits:

- CxON, CxPOL and CxSP bits of the CMxCON0 register
- CxIE bit of the PIE2 register
- CxINTP bit of the CMxCON1 register (for a rising edge detection)
- CxINTN bit of the CMxCON1 register (for a falling edge detection)
- PEIE and GIE bits of the INTCON register

The associated interrupt flag bit, CxIF bit of the PIR2 register, must be cleared in software. If another edge is detected while this flag is being cleared, the flag will still be set at the end of the sequence.

Note:	Although a comparator is disabled, an interrupt can be generated by changing the output polarity with the CxPOL bit of the CMxCON0 register, or by switching the comparator on or off with the CxON bit of the CMxCON0 register.

19.6 Comparator Positive Input Selection

Configuring the CxPCH<1:0> bits of the CMxCON1 register directs an internal voltage reference or an analog pin to the non-inverting input of the comparator:

- CxIN+ analog pin
- DAC_output
- FVR Buffer2
- VSS (Ground)

See **Section 14.0 "Fixed Voltage Reference (FVR)"** for more information on the Fixed Voltage Reference module.

See **Section 17.0 "Digital-to-Analog Converter (DAC) Module"** for more information on the DAC input signal.

Any time the comparator is disabled (CxON = 0), all comparator inputs are disabled.

© 2010-2015 Microchip Technology Inc.

19.7 Comparator Negative Input Selection

The CxNCH<1:0> bits of the CMxCON0 register direct one of four analog pins to the comparator inverting input.

Note:	To use CxIN+ and CxINx- pins as analog input, the appropriate bits must be set in the ANSEL register and the corresponding TRIS bits must also be set to disable the output drivers.

19.8 Comparator Response Time

The comparator output is indeterminate for a period of time after the change of an input source or the selection of a new reference voltage. This period is referred to as the response time. The response time of the comparator differs from the settling time of the voltage reference. Therefore, both of these times must be considered when determining the total response time to a comparator input change. See the Comparator and Voltage Reference Specifications in **Section 30.0 "Electrical Specifications"** for more details.

19.9 Interaction with ECCP Logic

The C1 and C2 comparators can be used as general purpose comparators. Their outputs can be brought out to the C1OUT and C2OUT pins. When the ECCP Auto-Shutdown is active it can use one or both comparator signals. If auto-restart is also enabled, the comparators can be configured as a closed loop analog feedback to the ECCP, thereby, creating an analog controlled PWM.

Note:	When the comparator module is first initialized the output state is unknown. Upon initialization, the user should verify the output state of the comparator prior to relying on the result, primarily when using the result in connection with other peripheral features, such as the ECCP Auto-Shutdown mode.

19.10 Analog Input Connection Considerations

A simplified circuit for an analog input is shown in Figure 19-3. Since the analog input pins share their connection with a digital input, they have reverse biased ESD protection diodes to V_{DD} and V_{SS}. The analog input, therefore, must be between V_{SS} and V_{DD}. If the input voltage deviates from this range by more than 0.6V in either direction, one of the diodes is forward biased and a latch-up may occur.

A maximum source impedance of 10 kΩ is recommended for the analog sources. Also, any external component connected to an analog input pin, such as a capacitor or a Zener diode, should have very little leakage current to minimize inaccuracies introduced.

Note 1:	When reading a PORT register, all pins configured as analog inputs will read as a '0'. Pins configured as digital inputs will convert as an analog input, according to the input specification.
2:	Analog levels on any pin defined as a digital input, may cause the input buffer to consume more current than is specified.

FIGURE 19-3: ANALOG INPUT MODEL

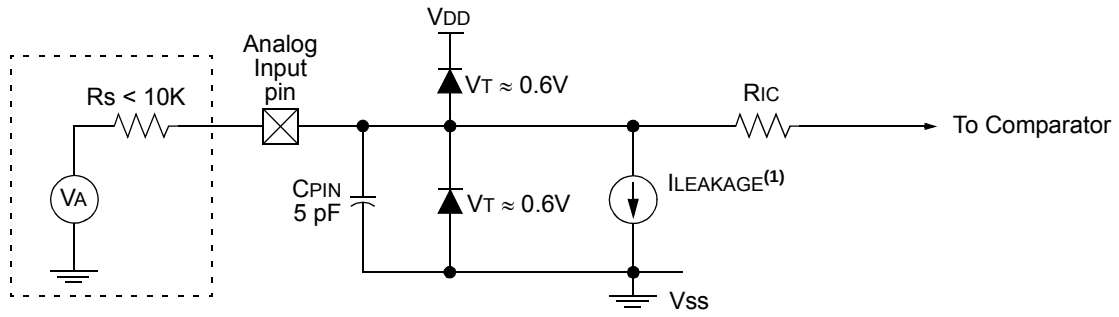

Legend: CPIN = Input Capacitance
ILEAKAGE = Leakage Current at the pin due to various junctions
RIC = Interconnect Resistance
RS = Source Impedance
VA = Analog Voltage
VT = Threshold Voltage

Note 1: See **Section 30.0 "Electrical Specifications"**.

© 2010-2015 Microchip Technology Inc.

REGISTER 19-1: CMxCON0: COMPARATOR Cx CONTROL REGISTER 0

R/W-0/0	R-0/0	R/W-0/0	R/W-0/0	U-0	R/W-1/1	R/W-0/0	R/W-0/0
CxON	CxOUT	CxOE	CxPOL	—	CxSP	CxHYS	CxSYNC
bit 7							bit 0

Legend:		
R = Readable bit	W = Writable bit	U = Unimplemented bit, read as ‘0’
u = Bit is unchanged	x = Bit is unknown	-n/n = Value at POR and BOR/Value at all other Resets
‘1’ = Bit is set	‘0’ = Bit is cleared	

bit 7 **CxON:** Comparator Enable bit
1 = Comparator is enabled
0 = Comparator is disabled and consumes no active power

bit 6 **CxOUT:** Comparator Output bit
If CxPOL = 1 (inverted polarity):
1 = CxVP < CxVN
0 = CxVP > CxVN
If CxPOL = 0 (non-inverted polarity):
1 = CxVP > CxVN
0 = CxVP < CxVN

bit 5 **CxOE:** Comparator Output Enable bit
1 = CxOUT is present on the CxOUT pin. Requires that the associated TRIS bit be cleared to actually drive the pin. Not affected by CxON.
0 = CxOUT is internal only

bit 4 **CxPOL:** Comparator Output Polarity Select bit
1 = Comparator output is inverted
0 = Comparator output is not inverted

bit 3 **Unimplemented:** Read as ‘0’

bit 2 **CxSP:** Comparator Speed/Power Select bit
1 = Comparator operates in normal power, higher speed mode
0 = Comparator operates in low-power, low-speed mode

bit 1 **CxHYS:** Comparator Hysteresis Enable bit
1 = Comparator hysteresis enabled
0 = Comparator hysteresis disabled

bit 0 **CxSYNC:** Comparator Output Synchronous Mode bit
1 = Comparator output to Timer1 and I/O pin is synchronous to changes on Timer1 clock source. Output updated on the falling edge of Timer1 clock source.
0 = Comparator output to Timer1 and I/O pin is asynchronous.

REGISTER 19-2: CMxCON1: COMPARATOR CX CONTROL REGISTER 1

R/W-0/0	R/W-0/0	R/W-0/0	R/W-0/0	U-0	U-0	R/W-0/0	R/W-0/0
CxINTP	CxINTN	CxPCH<1:0>		—	—	CxNCH<1:0>	
bit 7							bit 0

Legend:		
R = Readable bit	W = Writable bit	U = Unimplemented bit, read as ‘0’
u = Bit is unchanged	x = Bit is unknown	-n/n = Value at POR and BOR/Value at all other Resets
‘1’ = Bit is set	‘0’ = Bit is cleared	

bit 7 **CxINTP:** Comparator Interrupt on Positive Going Edge Enable bits
1 = The CxIF interrupt flag will be set upon a positive going edge of the CxOUT bit
0 = No interrupt flag will be set on a positive going edge of the CxOUT bit

bit 6 **CxINTN:** Comparator Interrupt on Negative Going Edge Enable bits
1 = The CxIF interrupt flag will be set upon a negative going edge of the CxOUT bit
0 = No interrupt flag will be set on a negative going edge of the CxOUT bit

bit 5-4 **CxPCH<1:0>:** Comparator Positive Input Channel Select bits
00 = CxVP connects to CxIN+ pin
01 = CxVP connects to DAC Voltage Reference
10 = CxVP connects to FVR Voltage Reference
11 = CxVP connects to Vss

bit 3-2 **Unimplemented:** Read as ‘0’

bit 1-0 **CxNCH<1:0>:** Comparator Negative Input Channel Select bits
00 = CxVN connects to C12IN0- pin
01 = CxVN connects to C12IN1- pin
10 = CxVN connects to C12IN2- pin
11 = CxVN connects to C12IN3- pin

REGISTER 19-3: CMOUT: COMPARATOR OUTPUT REGISTER

U-0	U-0	U-0	U-0	U-0	U-0	R-0/0	R-0/0
—	—	—	—	—	—	MC2OUT	MC1OUT
bit 7							bit 0

Legend:		
R = Readable bit	W = Writable bit	U = Unimplemented bit, read as ‘0’
u = Bit is unchanged	x = Bit is unknown	-n/n = Value at POR and BOR/Value at all other Resets
‘1’ = Bit is set	‘0’ = Bit is cleared	

bit 7-2 **Unimplemented:** Read as ‘0’

bit 1 **MC2OUT:** Mirror Copy of C2OUT bit

bit 0 **MC1OUT:** Mirror Copy of C1OUT bit

© 2010-2015 Microchip Technology Inc.

TABLE 19-2: SUMMARY OF REGISTERS ASSOCIATED WITH COMPARATOR MODULE

Name	Bit 7	Bit 6	Bit 5	Bit 4	Bit 3	Bit 2	Bit 1	Bit 0	Register on Page
CM1CON0	C1ON	C1OUT	C1OE	C1POL	---	C1SP	C1HYS	C1SYNC	171
CM2CON0	C2ON	C2OUT	C2OE	C2POL	—	C2SP	C2HYS	C2SYNC	171
CM1CON1	C1NTP	C1INTN	C1PCH<1:0>		—	—	C1NCH<1:0>		172
CM2CON1	C2NTP	C2INTN	C2PCH<1:0>		—	—	C2NCH<1:0>		172
CMOUT	—	—	—	—	—	—	MC2OUT	MC1OUT	172
DACCON0	DACEN	DACLPS	DACOE	—	DACPSS<1:0>		—	DACNSS	159
DACCON1	—	—	—	DACR<4:0>					159
FVRCON	FVREN	FVRRDY	TSEN	TSRNG	CDAFVR<1:0>		ADFVR<1:0>		141
INLVLA	—	—	INLVLA5	INLVLA4	INLVLA3	INLVLA2	INLVLA1	INLVLA0	123
INLVLC	INLVLC7(1)	INLVLC6(1)	INLVLC5	INLVLC4	INLVLC3	INLVLC2	INLVLC1	INLVLC0	134
INTCON	GIE	PEIE	TMR0IE	INTE	IOCIE	TMR0IF	INTF	IOCIF	89
PIE2	OSFIE	C2IE	C1IE	EEIE	BCLIE	—	—	CCP2IE	91
PIR2	OSFIF	C2IF	C1IF	EEIF	BCLIF	—	—	CCP2IF	94
TRISA	—	—	TRISA5	TRISA4	TRISA3	TRISA2	TRISA1	TRISA0	121
TRISC	TRISC7(1)	TRISC6(1)	TRISC5	TRISC4	TRISC3	TRISC2	TRISC1	TRISC0	132

Legend: — = unimplemented location, read as '0'. Shaded cells are unused by the comparator module.

Note 1: PIC16(L)F1828 only.

20.0 TIMER0 MODULE

The Timer0 module is an 8-bit timer/counter with the following features:

- 8-bit timer/counter register (TMR0)
- 8-bit prescaler (independent of Watchdog Timer)
- Programmable internal or external clock source
- Programmable external clock edge selection
- Interrupt on overflow
- TMR0 can be used to gate Timer1

Figure 20-1 is a block diagram of the Timer0 module.

20.1 Timer0 Operation

The Timer0 module can be used as either an 8-bit timer or an 8-bit counter.

20.1.1 8-BIT TIMER MODE

The Timer0 module will increment every instruction cycle, if used without a prescaler. 8-bit Timer mode is selected by clearing the TMR0CS bit of the OPTION_REG register.

When TMR0 is written, the increment is inhibited for two instruction cycles immediately following the write.

Note:	The value written to the TMR0 register can be adjusted, in order to account for the two instruction cycle delay when TMR0 is written.

20.1.2 8-BIT COUNTER MODE

In 8-Bit Counter mode, the Timer0 module will increment on every rising or falling edge of the T0CKI pin or the Capacitive Sensing Oscillator (CPSCLK) signal.

8-Bit Counter mode using the T0CKI pin is selected by setting the TMR0CS bit in the OPTION_REG register to '1' and resetting the T0XCS bit in the CPSCON0 register to '0'.

8-Bit Counter mode using the Capacitive Sensing Oscillator (CPSCLK) signal is selected by setting the TMR0CS bit in the OPTION_REG register to '1' and setting the T0XCS bit in the CPSCON0 register to '1'.

The rising or falling transition of the incrementing edge for either input source is determined by the TMR0SE bit in the OPTION_REG register.

FIGURE 20-1: BLOCK DIAGRAM OF THE TIMER0

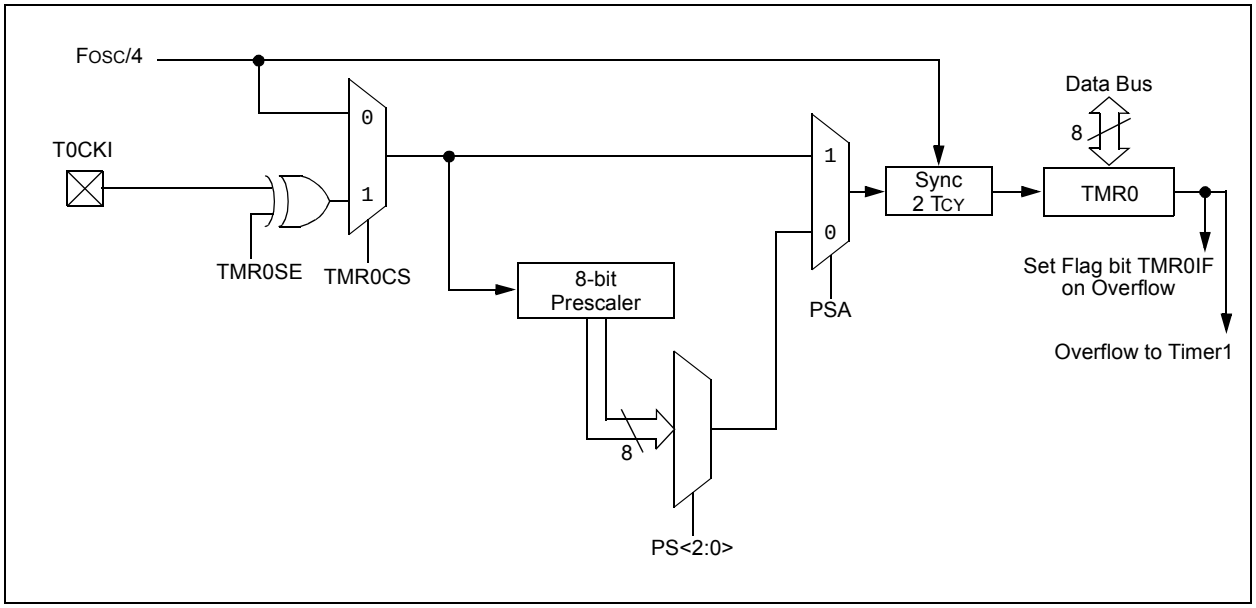

© 2010-2015 Microchip Technology Inc.

20.1.3 SOFTWARE PROGRAMMABLE PRESCALER

A software programmable prescaler is available for exclusive use with Timer0. The prescaler is enabled by clearing the PSA bit of the OPTION_REG register.

Note:	The Watchdog Timer (WDT) uses its own independent prescaler.

There are eight prescaler options for the Timer0 module ranging from 1:2 to 1:256. The prescale values are selectable via the PS<2:0> bits of the OPTION_REG register. In order to have a 1:1 prescaler value for the Timer0 module, the prescaler must be disabled by setting the PSA bit of the OPTION_REG register.

The prescaler is not readable or writable. All instructions writing to the TMR0 register will clear the prescaler.

20.1.4 TIMER0 INTERRUPT

Timer0 will generate an interrupt when the TMR0 register overflows from FFh to 00h. The TMR0IF interrupt flag bit of the INTCON register is set every time the TMR0 register overflows, regardless of whether or not the Timer0 interrupt is enabled. The TMR0IF bit can only be cleared in software. The Timer0 interrupt enable is the TMR0IE bit of the INTCON register.

Note:	The Timer0 interrupt cannot wake the processor from Sleep since the timer is frozen during Sleep.

20.1.5 8-BIT COUNTER MODE SYNCHRONIZATION

When in 8-Bit Counter mode, the incrementing edge on the T0CKI pin must be synchronized to the instruction clock. Synchronization can be accomplished by sampling the prescaler output on the Q2 and Q4 cycles of the instruction clock. The high and low periods of the external clocking source must meet the timing requirements as shown in **Section 30.0 "Electrical Specifications"**.

20.1.6 OPERATION DURING SLEEP

Timer0 cannot operate while the processor is in Sleep mode. The contents of the TMR0 register will remain unchanged while the processor is in Sleep mode.

20.2 Option and Timer0 Control Registers

REGISTER 20-1: OPTION_REG: OPTION REGISTER

R/W-1/1	R/W-1/1	R/W-1/1	R/W-1/1	R/W-1/1	R/W-1/1	R/W-1/1	R/W-1/1
$\overline{\text{WPUEN}}$	INTEDG	TMR0CS	TMR0SE	PSA	PS<2:0>		
bit 7							bit 0

Legend:		
R = Readable bit	W = Writable bit	U = Unimplemented bit, read as ‘0’
u = Bit is unchanged	x = Bit is unknown	-n/n = Value at POR and BOR/Value at all other Resets
‘1’ = Bit is set	‘0’ = Bit is cleared	

bit 7 **$\overline{\text{WPUEN}}$:** Weak Pull-up Enable bit
1 = All weak pull-ups are disabled (except $\overline{\text{MCLR}}$, if it is enabled)
0 = Weak pull-ups are enabled by individual WPUx latch values

bit 6 **INTEDG:** Interrupt Edge Select bit
1 = Interrupt on rising edge of INT pin
0 = Interrupt on falling edge of INT pin

bit 5 **TMR0CS:** Timer0 Clock Source Select bit
1 = Transition on T0CKI pin
0 = Internal instruction cycle clock (FOSC/4)

bit 4 **TMR0SE:** Timer0 Source Edge Select bit
1 = Increment on high-to-low transition on T0CKI pin
0 = Increment on low-to-high transition on T0CKI pin

bit 3 **PSA:** Prescaler Assignment bit
1 = Prescaler is not assigned to the Timer0 module
0 = Prescaler is assigned to the Timer0 module

bit 2-0 **PS<2:0>:** Prescaler Rate Select bits

Bit Value	Timer0 Rate
000	1 : 2
001	1 : 4
010	1 : 8
011	1 : 16
100	1 : 32
101	1 : 64
110	1 : 128
111	1 : 256

© 2010-2015 Microchip Technology Inc.

TABLE 20-1: SUMMARY OF REGISTERS ASSOCIATED WITH TIMER0

Name	Bit 7	Bit 6	Bit 5	Bit 4	Bit 3	Bit 2	Bit 1	Bit 0	Register on Page
CPSCON0	CPSON	CPSRM	—	—	CPSRNG<1:0>		CPSOUT	T0XCS	319
FVRCON	FVREN	FVRRDY	TSEN	TSRNG	CDAFVR<1:0>		ADFVR<1:0>		141
INLVLA	—	—	INLVLA5	INLVLA4	INLVLA3	INLVLA2	INLVLA1	INLVLA0	123
INTCON	GIE	PEIE	TMR0IE	INTE	IOCIE	TMR0IF	INTF	IOCIF	89
OPTION_REG	$\overline{\text{WPUEN}}$	INTEDG	TMR0CS	TMR0SE	PSA	PS<2:0>			176
TMR0	Timer0 Module Register								174*
TRISA	—	—	TRISA5	TRISA4	TRISA3	TRISA2	TRISA1	TRISA0	121

Legend: — = Unimplemented location, read as '0'. Shaded cells are not used by the Timer0 module.

* Page provides register information.

21.0 TIMER1 MODULE WITH GATE CONTROL

The Timer1 module is a 16-bit timer/counter with the following features:

- 16-bit timer/counter register pair (TMR1H:TMR1L)
- Programmable internal or external clock source
- 2-bit prescaler
- Dedicated 32 kHz oscillator circuit
- Optionally synchronized comparator out
- Multiple Timer1 gate (count enable) sources
- Interrupt on overflow
- Wake-up on overflow (external clock, Asynchronous mode only)
- Time base for the Capture/Compare function
- Special Event Trigger (with CCP/ECCP)
- Selectable Gate Source Polarity
- Gate Toggle Mode
- Gate Single-pulse Mode
- Gate Value Status
- Gate Event Interrupt

Figure 21-1 is a block diagram of the Timer1 module.

FIGURE 21-1: TIMER1 BLOCK DIAGRAM

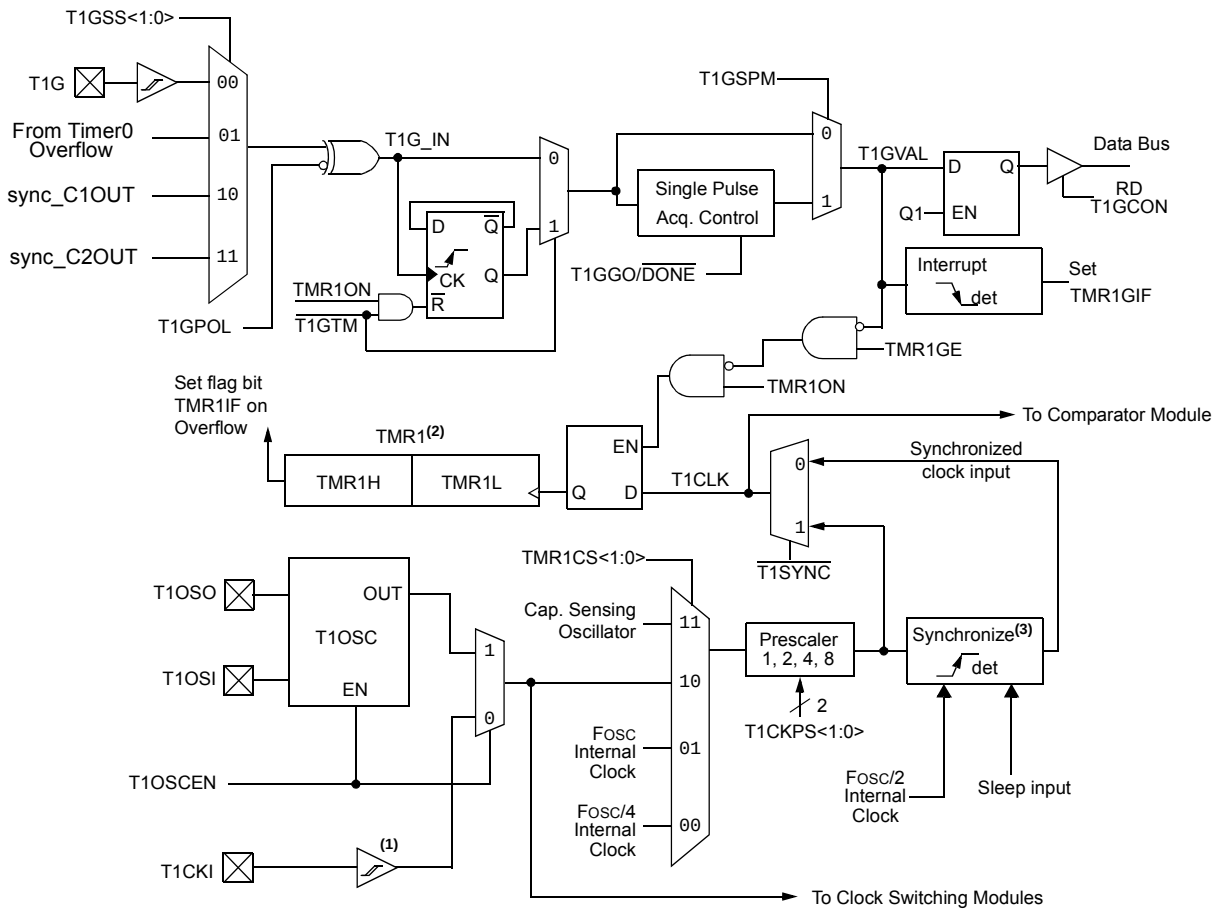

Note 1: ST Buffer is high speed type when using T1CKI.
2: Timer1 register increments on rising edge.
3: Synchronize does not operate while in Sleep.

© 2010-2015 Microchip Technology Inc.

21.1 Timer1 Operation

The Timer1 module is a 16-bit incrementing counter which is accessed through the TMR1H:TMR1L register pair. Writes to TMR1H or TMR1L directly update the counter.

When used with an internal clock source, the module is a timer and increments on every instruction cycle. When used with an external clock source, the module can be used as either a timer or counter and increments on every selected edge of the external source.

Timer1 is enabled by configuring the TMR1ON and TMR1GE bits in the T1CON and T1GCON registers, respectively. Table 21-1 displays the Timer1 enable selections.

TABLE 21-1: TIMER1 ENABLE SELECTIONS

TMR1ON	TMR1GE	Timer1 Operation
0	0	Off
0	1	Off
1	0	Always On
1	1	Count Enabled

21.2 Clock Source Selection

The TMR1CS<1:0> and T1OSCEN bits of the T1CON register are used to select the clock source for Timer1. Table 21-2 displays the clock source selections.

21.2.1 INTERNAL CLOCK SOURCE

When the internal clock source is selected the TMR1H:TMR1L register pair will increment on multiples of FOSC as determined by the Timer1 prescaler.

When the FOSC internal clock source is selected, the Timer1 register value will increment by four counts every instruction clock cycle. Due to this condition, a 2 LSB error in resolution will occur when reading the Timer1 value. To utilize the full resolution of Timer1, an asynchronous input signal must be used to gate the Timer1 clock input.

The following asynchronous sources may be used:

- Asynchronous event on the T1G pin to Timer1 gate
- C1 or C2 comparator input to Timer1 gate

21.2.2 EXTERNAL CLOCK SOURCE

When the external clock source is selected, the Timer1 module may work as a timer or a counter.

When enabled to count, Timer1 is incremented on the rising edge of the external clock input T1CKI or the capacitive sensing oscillator signal. Either of these external clock sources can be synchronized to the microcontroller system clock or they can run asynchronously.

When used as a timer with a clock oscillator, an external 32.768 kHz crystal can be used in conjunction with the dedicated internal oscillator circuit.

Note: In Counter mode, a falling edge must be registered by the counter prior to the first incrementing rising edge after any one or more of the following conditions:

- Timer1 enabled after POR
- Write to TMR1H or TMR1L
- Timer1 is disabled
- Timer1 is disabled (TMR1ON = 0) when T1CKI is high then Timer1 is enabled (TMR1ON=1) when T1CKI is low.

TABLE 21-2: CLOCK SOURCE SELECTIONS

TMR1CS1	TMR1CS0	T1OSCEN	Clock Source
0	1	x	System Clock (FOSC)
0	0	x	Instruction Clock (FOSC/4)
1	1	x	Capacitive Sensing Oscillator
1	0	0	External Clocking on T1CKI Pin
1	0	1	Osc.Circuit On T1OSI/T1OSO Pins

© 2010-2015 Microchip Technology Inc.

21.3 Timer1 Prescaler

Timer1 has four prescaler options allowing 1, 2, 4 or 8 divisions of the clock input. The T1CKPS bits of the T1CON register control the prescale counter. The prescale counter is not directly readable or writable; however, the prescaler counter is cleared upon a write to TMR1H or TMR1L.

21.4 Timer1 Oscillator

A dedicated low-power 32.768 kHz oscillator circuit is built-in between pins T1OSI (input) and T1OSO (amplifier output). This internal circuit is to be used in conjunction with an external 32.768 kHz crystal.

The oscillator circuit is enabled by setting the T1OSCEN bit of the T1CON register. The oscillator will continue to run during Sleep.

Note:	The oscillator requires a start-up and stabilization time before use. Thus, T1OSCEN should be set and a suitable delay observed prior to enabling Timer1.

21.5 Timer1 Operation in Asynchronous Counter Mode

If control bit $\overline{\text{T1SYNC}}$ of the T1CON register is set, the external clock input is not synchronized. The timer increments asynchronously to the internal phase clocks. If the external clock source is selected, then the timer will continue to run during Sleep and can generate an interrupt on overflow, which will wake-up the processor. However, special precautions in software are needed to read/write the timer (see **Section 21.5.1 "Reading and Writing Timer1 in Asynchronous Counter Mode"**).

Note:	When switching from synchronous to asynchronous operation, it is possible to skip an increment. When switching from asynchronous to synchronous operation, it is possible to produce an additional increment.

21.5.1 READING AND WRITING TIMER1 IN ASYNCHRONOUS COUNTER MODE

Reading TMR1H or TMR1L while the timer is running from an external asynchronous clock will ensure a valid read (taken care of in hardware). However, the user should keep in mind that reading the 16-bit timer in two 8-bit values itself, poses certain problems, since the timer may overflow between the reads.

For writes, it is recommended that the user simply stop the timer and write the desired values. A write contention may occur by writing to the timer registers, while the register is incrementing. This may produce an unpredictable value in the TMR1H:TMR1L register pair.

21.6 Timer1 Gate

Timer1 can be configured to count freely or the count can be enabled and disabled using Timer1 gate circuitry. This is also referred to as Timer1 Gate Enable.

Timer1 gate can also be driven by multiple selectable sources.

21.6.1 TIMER1 GATE ENABLE

The Timer1 Gate Enable mode is enabled by setting the TMR1GE bit of the T1GCON register. The polarity of the Timer1 Gate Enable mode is configured using the T1GPOL bit of the T1GCON register.

When Timer1 Gate Enable mode is enabled, Timer1 will increment on the rising edge of the Timer1 clock source. When Timer1 Gate Enable mode is disabled, no incrementing will occur and Timer1 will hold the current count. See Figure 21-3 for timing details.

TABLE 21-3: TIMER1 GATE ENABLE SELECTIONS

T1CLK	T1GPOL	T1G	Timer1 Operation
↑	0	0	Counts
↑	0	1	Holds Count
↑	1	0	Holds Count
↑	1	1	Counts

21.6.2 TIMER1 GATE SOURCE SELECTION

The Timer1 gate source selections are shown in Table 21-4. Source selection is controlled by the T1GSS bits of the T1GCON register. The polarity for each available source is also selectable. Polarity selection is controlled by the T1GPOL bit of the T1GCON register.

TABLE 21-4: TIMER1 GATE SOURCES

T1GSS	Timer1 Gate Source
00	Timer1 Gate Pin
01	Overflow of Timer0 (TMR0 increments from FFh to 00h)
10	Comparator 1 Output sync_C1OUT (optionally Timer1 synchronized output)
11	Comparator 2 Output sync_C2OUT (optionally Timer1 synchronized output)

© 2010-2015 Microchip Technology Inc.

21.6.2.1 T1G Pin Gate Operation

The T1G pin is one source for Timer1 gate control. It can be used to supply an external source to the Timer1 gate circuitry.

21.6.2.2 Timer0 Overflow Gate Operation

When Timer0 increments from FFh to 00h, a low-to-high pulse will automatically be generated and internally supplied to the Timer1 gate circuitry.

21.6.2.3 Comparator C1 Gate Operation

The output resulting from a Comparator 1 operation can be selected as a source for Timer1 gate control. The Comparator 1 output (sync_C1OUT) can be synchronized to the Timer1 clock or left asynchronous. For more information see **Section 19.4.1 "Comparator Output Synchronization"**.

21.6.2.4 Comparator C2 Gate Operation

The output resulting from a Comparator 2 operation can be selected as a source for Timer1 gate control. The Comparator 2 output (sync_C2OUT) can be synchronized to the Timer1 clock or left asynchronous. For more information see **Section 19.4.1 "Comparator Output Synchronization"**.

21.6.3 TIMER1 GATE TOGGLE MODE

When Timer1 Gate Toggle mode is enabled, it is possible to measure the full-cycle length of a Timer1 gate signal, as opposed to the duration of a single level pulse.

The Timer1 gate source is routed through a flip-flop that changes state on every incrementing edge of the signal. See Figure 21-4 for timing details.

Timer1 Gate Toggle mode is enabled by setting the T1GTM bit of the T1GCON register. When the T1GTM bit is cleared, the flip-flop is cleared and held clear. This is necessary in order to control which edge is measured.

Note:	Enabling Toggle mode at the same time as changing the gate polarity may result in indeterminate operation.

21.6.4 TIMER1 GATE SINGLE-PULSE MODE

When Timer1 Gate Single-Pulse mode is enabled, it is possible to capture a single pulse gate event. Timer1 Gate Single-Pulse mode is first enabled by setting the T1GSPM bit in the T1GCON register. Next, the T1GGO/$\overline{\text{DONE}}$ bit in the T1GCON register must be set. The Timer1 will be fully enabled on the next incrementing edge. On the next trailing edge of the pulse, the T1GGO/$\overline{\text{DONE}}$ bit will automatically be cleared. No other gate events will be allowed to increment Timer1 until the T1GGO/$\overline{\text{DONE}}$ bit is once again set in software. See Figure 21-5 for timing details.

If the Single Pulse Gate mode is disabled by clearing the T1GSPM bit in the T1GCON register, the T1GGO/$\overline{\text{DONE}}$ bit should also be cleared.

Enabling the Toggle mode and the Single-Pulse mode simultaneously will permit both sections to work together. This allows the cycle times on the Timer1 Gate source to be measured. See Figure 21-6 for timing details.

21.6.5 TIMER1 GATE VALUE STATUS

When Timer1 Gate Value Status is utilized, it is possible to read the most current level of the gate control value. The value is stored in the T1GVAL bit in the T1GCON register. The T1GVAL bit is valid even when the Timer1 Gate is not enabled (TMR1GE bit is cleared).

21.6.6 TIMER1 GATE EVENT INTERRUPT

When Timer1 Gate Event Interrupt is enabled, it is possible to generate an interrupt upon the completion of a gate event. When the falling edge of T1GVAL occurs, the TMR1GIF flag bit in the PIR1 register will be set. If the TMR1GIE bit in the PIE1 register is set, then an interrupt will be recognized.

The TMR1GIF flag bit operates even when the Timer1 gate is not enabled (TMR1GE bit is cleared).

21.7 Timer1 Interrupt

The Timer1 register pair (TMR1H:TMR1L) increments to FFFFh and rolls over to 0000h. When Timer1 rolls over, the Timer1 interrupt flag bit of the PIR1 register is set. To enable the interrupt on rollover, you must set these bits:

- TMR1ON bit of the T1CON register
- TMR1IE bit of the PIE1 register
- PEIE bit of the INTCON register
- GIE bit of the INTCON register

The interrupt is cleared by clearing the TMR1IF bit in the Interrupt Service Routine.

Note:	The TMR1H:TMR1L register pair and the TMR1IF bit should be cleared before enabling interrupts.

21.8 Timer1 Operation During Sleep

Timer1 can only operate during Sleep when set up in Asynchronous Counter mode. In this mode, an external crystal or clock source can be used to increment the counter. To set up the timer to wake the device:

- TMR1ON bit of the T1CON register must be set
- TMR1IE bit of the PIE1 register must be set
- PEIE bit of the INTCON register must be set
- $\overline{\text{T1SYNC}}$ bit of the T1CON register must be set
- TMR1CS bits of the T1CON register must be configured
- T1OSCEN bit of the T1CON register must be configured

The device will wake-up on an overflow and execute the next instructions. If the GIE bit of the INTCON register is set, the device will call the Interrupt Service Routine.

Timer1 oscillator will continue to operate in Sleep regardless of the $\overline{\text{T1SYNC}}$ bit setting.

21.9 ECCP/CCP Capture/Compare Time Base

The CCP modules use the TMR1H:TMR1L register pair as the time base when operating in Capture or Compare mode.

In Capture mode, the value in the TMR1H:TMR1L register pair is copied into the CCPR1H:CCPR1L register pair on a configured event.

In Compare mode, an event is triggered when the value CCPR1H:CCPR1L register pair matches the value in the TMR1H:TMR1L register pair. This event can be a Special Event Trigger.

For more information, see **Section 24.0 "Capture/Compare/PWM Modules"**.

21.10 ECCP/CCP Special Event Trigger

When any of the CCP's are configured to trigger a special event, the trigger will clear the TMR1H:TMR1L register pair. This special event does not cause a Timer1 interrupt. The CCP module may still be configured to generate a CCP interrupt.

In this mode of operation, the CCPR1H:CCPR1L register pair becomes the period register for Timer1.

Timer1 should be synchronized and FOSC/4 should be selected as the clock source in order to utilize the Special Event Trigger. Asynchronous operation of Timer1 can cause a Special Event Trigger to be missed.

In the event that a write to TMR1H or TMR1L coincides with a Special Event Trigger from the CCP, the write will take precedence.

For more information, see **Section 16.2.5 "Special Event Trigger"**.

FIGURE 21-2: TIMER1 INCREMENTING EDGE

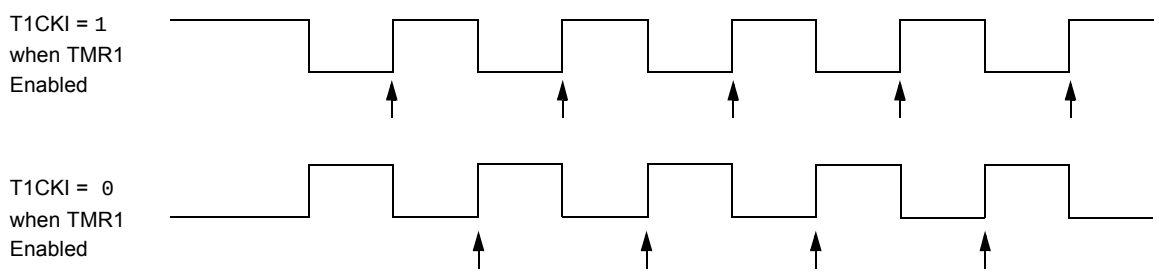

Note 1: Arrows indicate counter increments.

2: In Counter mode, a falling edge must be registered by the counter prior to the first incrementing rising edge of the clock.

© 2010-2015 Microchip Technology Inc.

FIGURE 21-3: TIMER1 GATE ENABLE MODE

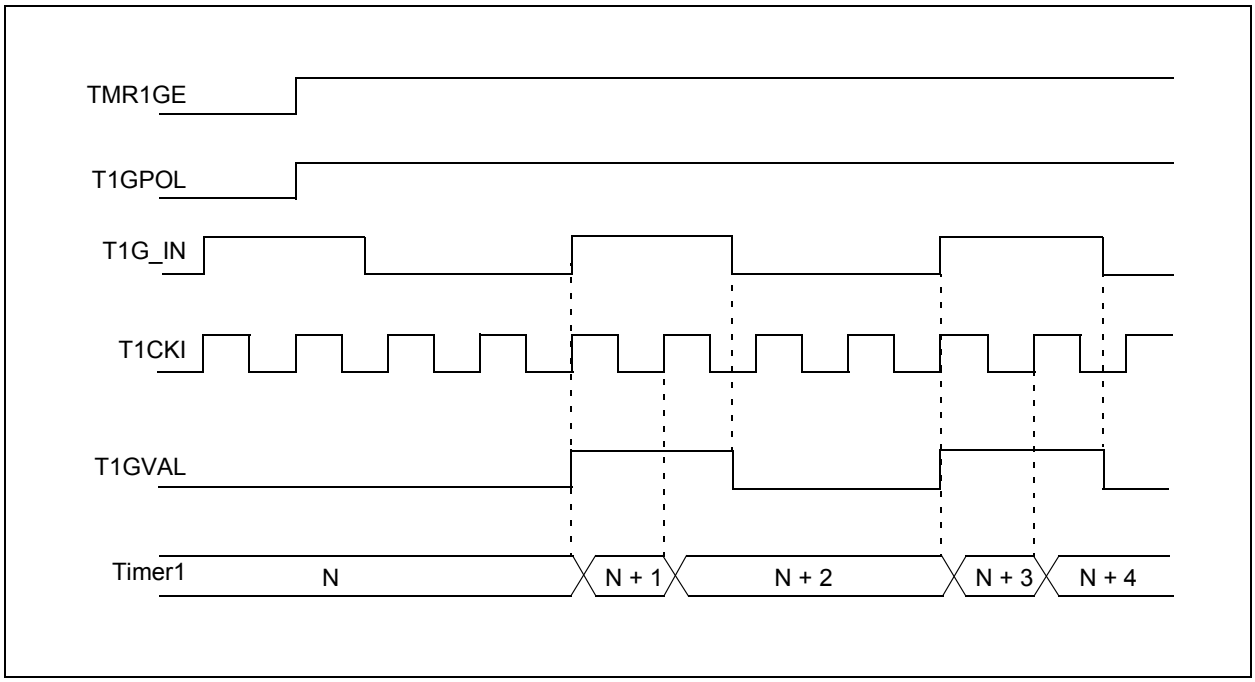

FIGURE 21-4: TIMER1 GATE TOGGLE MODE

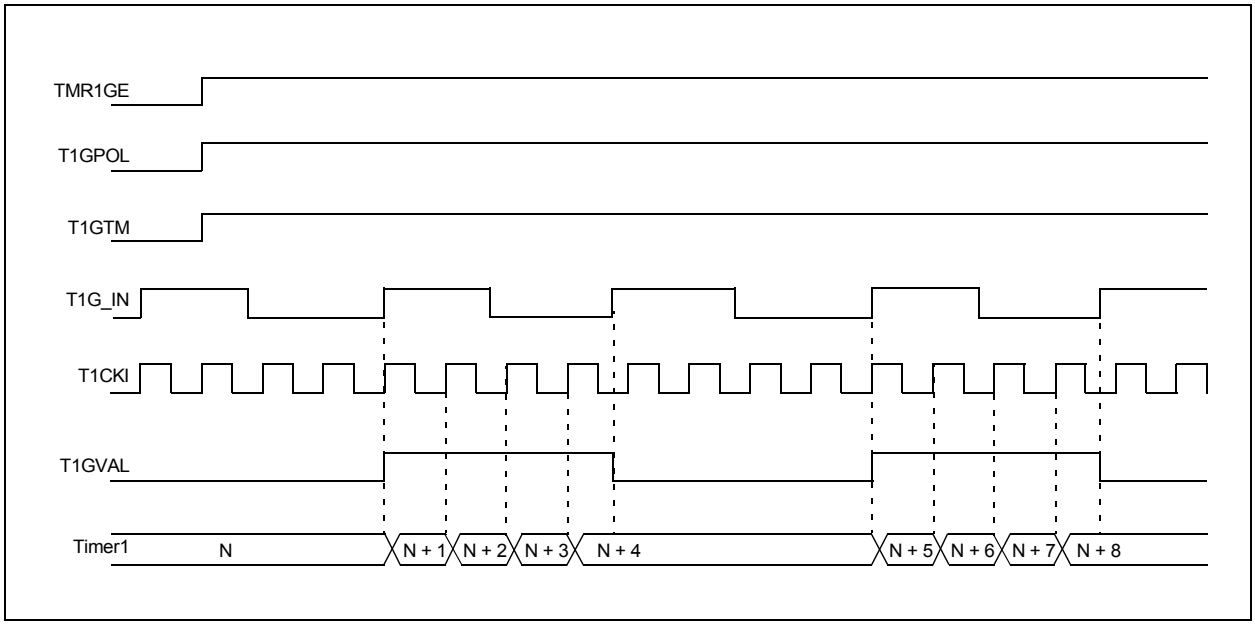

FIGURE 21-5: TIMER1 GATE SINGLE-PULSE MODE

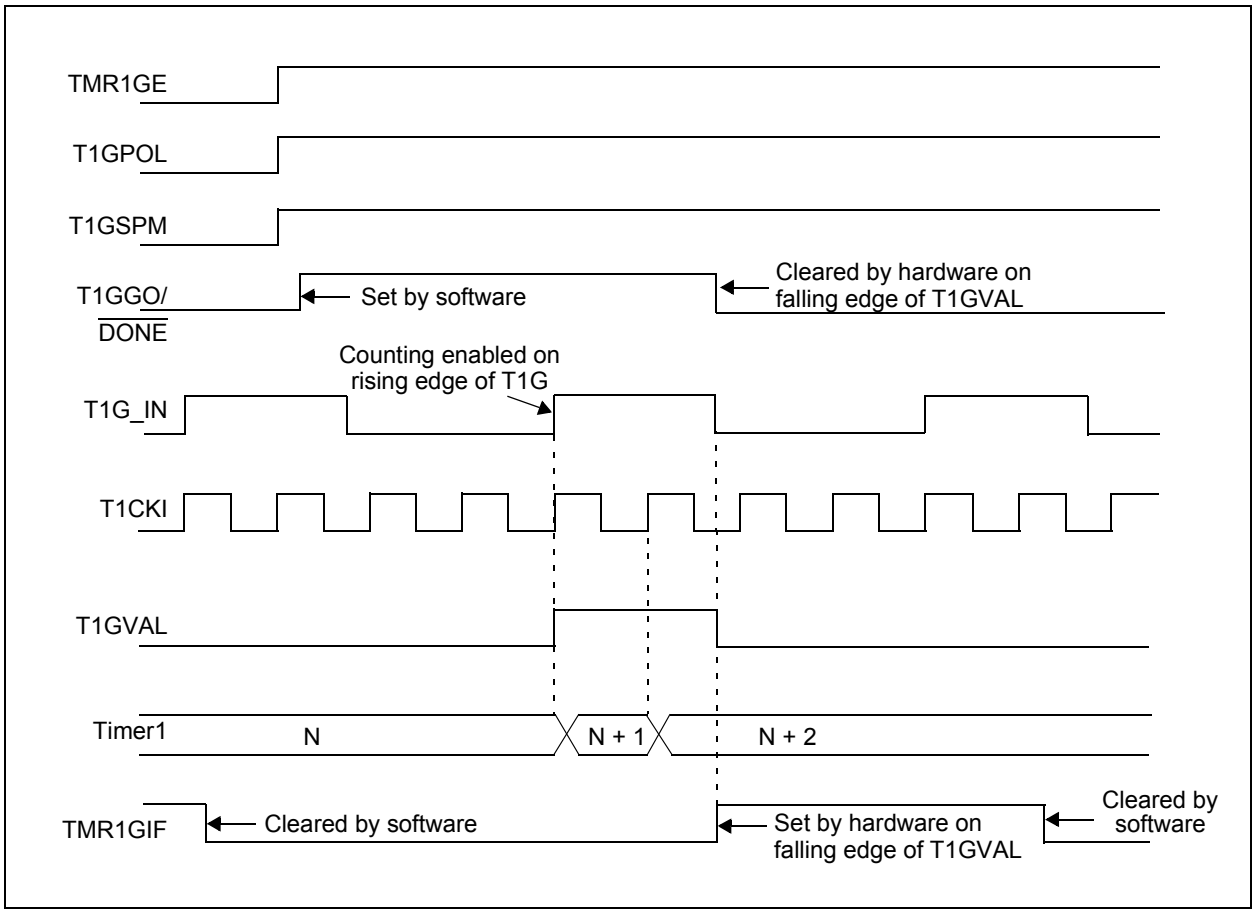

© 2010-2015 Microchip Technology Inc.

FIGURE 21-6: TIMER1 GATE SINGLE-PULSE AND TOGGLE COMBINED MODE

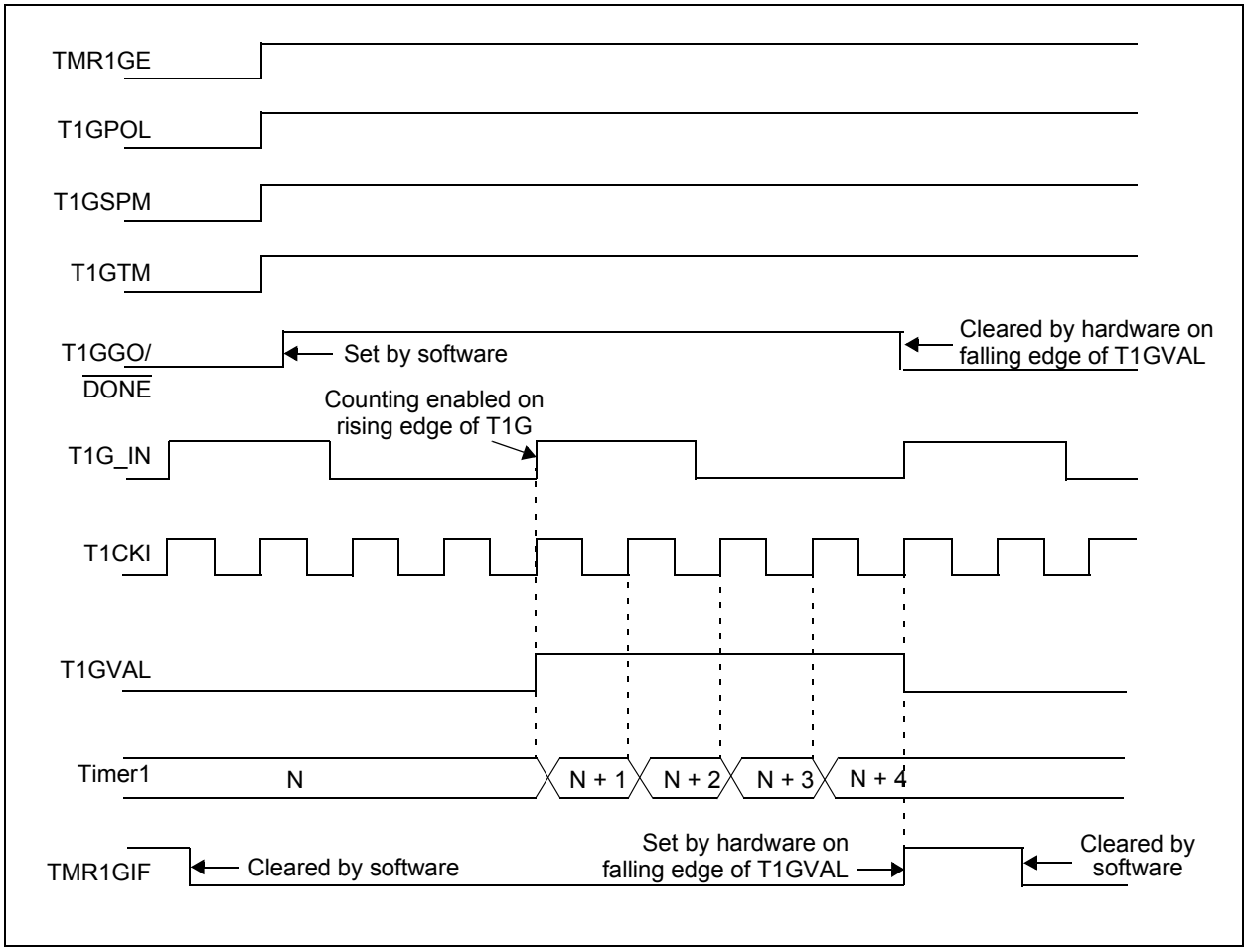

21.11 Timer1 Control Registers

REGISTER 21-1: T1CON: TIMER1 CONTROL REGISTER

R/W-0/u	R/W-0/u	R/W-0/u	R/W-0/u	R/W-0/u	R/W-0/u	U-0	R/W-0/u
TMR1CS<1:0>		T1CKPS<1:0>		T1OSCEN	$\overline{\text{T1SYNC}}$	—	TMR1ON
bit 7							bit 0

Legend:		
R = Readable bit	W = Writable bit	U = Unimplemented bit, read as ‘0’
u = Bit is unchanged	x = Bit is unknown	-n/n = Value at POR and BOR/Value at all other Resets
‘1’ = Bit is set	‘0’ = Bit is cleared	

bit 7-6 **TMR1CS<1:0>:** Timer1 Clock Source Select bits
- 11 = Timer1 clock source is Capacitive Sensing Oscillator (CAPOSC)
- 10 = Timer1 clock source is pin or oscillator:
  - If T1OSCEN = 0:
  - External clock from T1CKI pin (on the rising edge)
  - If T1OSCEN = 1:
  - Crystal oscillator on T1OSI/T1OSO pins
- 01 = Timer1 clock source is system clock (FOSC)
- 00 = Timer1 clock source is instruction clock (FOSC/4)

bit 5-4 **T1CKPS<1:0>:** Timer1 Input Clock Prescale Select bits
- 11 = 1:8 Prescale value
- 10 = 1:4 Prescale value
- 01 = 1:2 Prescale value
- 00 = 1:1 Prescale value

bit 3 **T1OSCEN:** LP Oscillator Enable Control bit
- 1 = Dedicated Timer1 oscillator circuit enabled
- 0 = Dedicated Timer1 oscillator circuit disabled

bit 2 **$\overline{\text{T1SYNC}}$:** Timer1 Synchronization Control bit
- 1 = Do not synchronize synchronous clock input
- 0 = Synchronize asynchronous clock input with system clock (FOSC)

bit 1 **Unimplemented:** Read as ‘0’

bit 0 **TMR1ON:** Timer1 On bit
- 1 = Enables Timer1
- 0 = Stops Timer1 and clears Timer1 gate flip-flop

© 2010-2015 Microchip Technology Inc.

REGISTER 21-2: T1GCON: TIMER1 GATE CONTROL REGISTER

R/W-0/u	R/W-0/u	R/W-0/u	R/W-0/u	R/W/HC-0/u	R-x/x	R/W-0/u	R/W-0/u
TMR1GE	T1GPOL	T1GTM	T1GSPM	T1GGO/$\overline{\text{DONE}}$	T1GVAL	T1GSS<1:0>	
bit 7							bit 0

Legend:		
R = Readable bit	W = Writable bit	U = Unimplemented bit, read as '0'
u = Bit is unchanged	x = Bit is unknown	-n/n = Value at POR and BOR/Value at all other Resets
'1' = Bit is set	'0' = Bit is cleared	HC = Bit is cleared by hardware

bit 7 **TMR1GE:** Timer1 Gate Enable bit

If TMR1ON = 0:
This bit is ignored
If TMR1ON = 1:
1 = Timer1 counting is controlled by the Timer1 gate function
0 = Timer1 counts regardless of Timer1 gate function

bit 6 **T1GPOL:** Timer1 Gate Polarity bit

1 = Timer1 gate is active-high (Timer1 counts when gate is high)
0 = Timer1 gate is active-low (Timer1 counts when gate is low)

bit 5 **T1GTM:** Timer1 Gate Toggle Mode bit

1 = Timer1 Gate Toggle mode is enabled
0 = Timer1 Gate Toggle mode is disabled and toggle flip-flop is cleared
Timer1 gate flip-flop toggles on every rising edge.

bit 4 **T1GSPM:** Timer1 Gate Single-Pulse Mode bit

1 = Timer1 gate Single-Pulse mode is enabled and is controlling Timer1 gate
0 = Timer1 gate Single-Pulse mode is disabled

bit 3 **T1GGO/$\overline{\text{DONE}}$:** Timer1 Gate Single-Pulse Acquisition Status bit

1 = Timer1 gate single-pulse acquisition is ready, waiting for an edge
0 = Timer1 gate single-pulse acquisition has completed or has not been started

bit 2 **T1GVAL:** Timer1 Gate Current State bit

Indicates the current state of the Timer1 gate that could be provided to TMR1H:TMR1L.
Unaffected by Timer1 Gate Enable (TMR1GE).

bit 1-0 **T1GSS<1:0>:** Timer1 Gate Source Select bits

11 = Comparator 2 optionally synchronized output (sync_C2OUT)
10 = Comparator 1 optionally synchronized output (sync_C1OUT)
01 = Timer0 overflow output
00 = Timer1 gate pin

TABLE 21-5: SUMMARY OF REGISTERS ASSOCIATED WITH TIMER1

Name	Bit 7	Bit 6	Bit 5	Bit 4	Bit 3	Bit 2	Bit 1	Bit 0	Register on Page
ANSELA	—	—	—	ANSA4	—	ANSA2	ANSA1	ANSA0	122
CCP1CON	P1M<1:0>		DC1B<1:0>		CCP1M<3:0>				225
CCP2CON	P2M<:0>1		DC2B<1:0>		CCP2M<3:0>				225
INLVLA	—	—	INLVLA5	INLVLA4	INLVLA3	INLVLA2	INLVLA1	INLVLA0	123
INTCON	GIE	PEIE	TMR0IE	INTE	IOCIE	TMR0IF	INTF	IOCIF	89
PIE1	TMR1GIE	ADIE	RCIE	TXIE	SSP1IE	CCP1IE	TMR2IE	TMR1IE	90
PIR1	TMR1GIF	ADIF	RCIF	TXIF	SSP1IF	CCP1IF	TMR2IF	TMR1IF	93
TMR1H	Holding Register for the Most Significant Byte of the 16-bit TMR1 Register								182*
TMR1L	Holding Register for the Least Significant Byte of the 16-bit TMR1 Register								182*
TRISA	—	—	TRISA5	TRISA4	TRISA3	TRISA2	TRISA1	TRISA0	121
T1CON	TMR1CS1	TMR1CS0	T1CKPS<1:0>		T1OSCEN	$\overline{\text{T1SYNC}}$	—	TMR1ON	186
T1GCON	TMR1GE	T1GPOL	T1GTM	T1GSPM	$\overline{\text{T1GGO}}$/$\overline{\text{DONE}}$	T1GVAL	T1GSS1	T1GSS0	187

Legend: — = unimplemented location, read as '0'. Shaded cells are not used by the Timer1 module.

* Page provides register information.

Note 1: PIC16(L)F1828 only.

© 2010-2015 Microchip Technology Inc.

22.0 TIMER2/4/6 MODULES

There are up to three identical Timer2-type modules available. To maintain pre-existing naming conventions, the Timers are called Timer2, Timer4 and Timer6 (also Timer2/4/6).

Note:	The 'x' variable used in this section is used to designate Timer2, Timer4, or Timer6. For example, TxCON references T2CON, T4CON, or T6CON. PRx references PR2, PR4, or PR6.

The Timer2/4/6 modules incorporate the following features:

- 8-bit Timer and Period registers (TMRx and PRx, respectively)
- Readable and writable (both registers)
- Software programmable prescaler (1:1, 1:4, 1:16, and 1:64)
- Software programmable postscaler (1:1 to 1:16)
- Interrupt on TMRx match with PRx, respectively
- Optional use as the shift clock for the MSSPx modules (Timer2 only)

See Figure 22-1 for a block diagram of Timer2/4/6.

FIGURE 22-1: TIMER2/4/6 BLOCK DIAGRAM

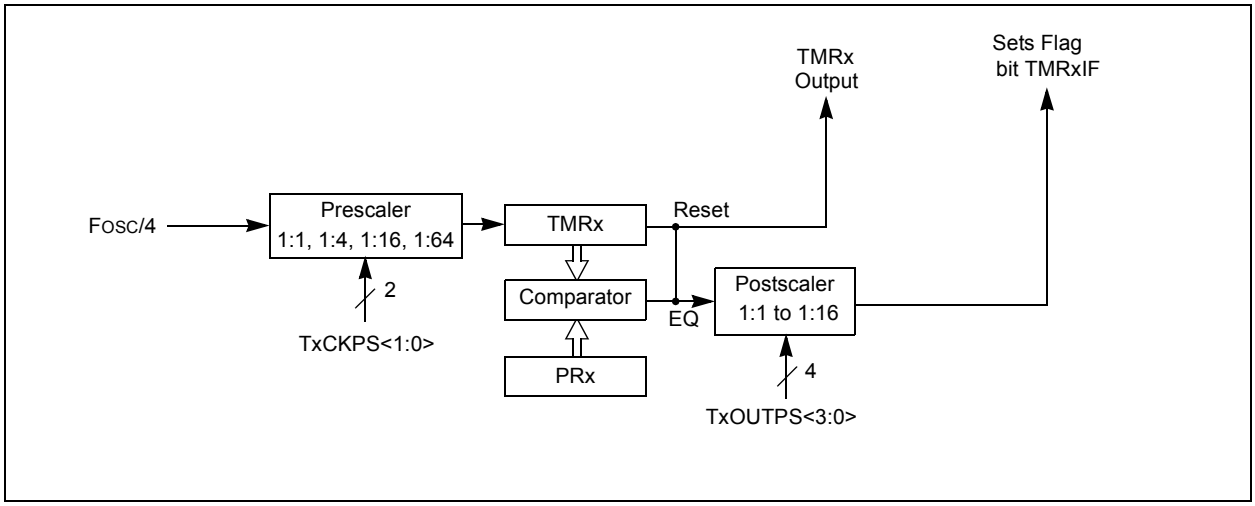

22.1 Timer2/4/6 Operation

The clock input to the Timer2/4/6 modules is the system instruction clock (FOSC/4).

TMRx increments from 00h on each clock edge.

A 4-bit counter/prescaler on the clock input allows direct input, divide-by-4 and divide-by-16 prescale options. These options are selected by the prescaler control bits, TxCKPS<1:0> of the TxCON register. The value of TMRx is compared to that of the Period register, PRx, on each clock cycle. When the two values match, the comparator generates a match signal as the timer output. This signal also resets the value of TMRx to 00h on the next cycle and drives the output counter/postscaler (see **Section 22.2 "Timer2/4/6 Interrupt"**).

The TMRx and PRx registers are both directly readable and writable. The TMRx register is cleared on any device Reset, whereas the PRx register initializes to FFh. Both the prescaler and postscaler counters are cleared on the following events:

- a write to the TMRx register
- a write to the TxCON register
- Power-on Reset (POR)
- Brown-out Reset (BOR)
- $\overline{\text{MCLR}}$ Reset
- Watchdog Timer (WDT) Reset
- Stack Overflow Reset
- Stack Underflow Reset
- RESET Instruction

Note:	TMRx is not cleared when TxCON is written.

22.2 Timer2/4/6 Interrupt

Timer2/4/6 can also generate an optional device interrupt. The Timer2/4/6 output signal (TMRx-to-PRx match) provides the input for the 4-bit counter/postscaler. This counter generates the TMRx match interrupt flag which is latched in TMRxIF of the PIRx register. The interrupt is enabled by setting the TMRx Match Interrupt Enable bit, TMRxIE of the PIEx register.

A range of 16 postscale options (from 1:1 through 1:16 inclusive) can be selected with the postscaler control bits, TxOUTPS<3:0>, of the TxCON register.

22.3 Timer2/4/6 Output

The unscaled output of TMRx is available primarily to the CCP modules, where it is used as a time base for operations in PWM mode.

Timer2 can be optionally used as the shift clock source for the MSSPx modules operating in SPI mode. Additional information is provided in **Section 25.1 "Master SSP (MSSP1) Module Overview"**.

22.4 Timer2/4/6 Operation During Sleep

The Timer2/4/6 timers cannot be operated while the processor is in Sleep mode. The contents of the TMRx and PRx registers will remain unchanged while the processor is in Sleep mode.

© 2010-2015 Microchip Technology Inc.

22.5 Timer2 Control Register

REGISTER 22-1: TXCON: TIMER2/TIMER4/TIMER6 CONTROL REGISTER

U-0	R/W-0/0	R/W-0/0	R/W-0/0	R/W-0/0	R/W-0/0	R/W-0/0	R/W-0/0
—	TxOUTPS<3:0>				TMRxON	TxCKPS<1:0>	
bit 7							bit 0

Legend:		
R = Readable bit	W = Writable bit	U = Unimplemented bit, read as ‘0’
u = Bit is unchanged	x = Bit is unknown	-n/n = Value at POR and BOR/Value at all other Resets
‘1’ = Bit is set	‘0’ = Bit is cleared	

bit 7 **Unimplemented:** Read as ‘0’

bit 6-3 **TxOUTPS<3:0>:** Timerx Output Postscaler Select bits

1111 = 1:16 Postscaler
1110 = 1:15 Postscaler
1101 = 1:14 Postscaler
1100 = 1:13 Postscaler
1011 = 1:12 Postscaler
1010 = 1:11 Postscaler
1001 = 1:10 Postscaler
1000 = 1:9 Postscaler
0111 = 1:8 Postscaler
0110 = 1:7 Postscaler
0101 = 1:6 Postscaler
0100 = 1:5 Postscaler
0011 = 1:4 Postscaler
0010 = 1:3 Postscaler
0001 = 1:2 Postscaler
0000 = 1:1 Postscaler

bit 2 **TMRxON:** Timerx On bit

1 = Timerx is on
0 = Timerx is off

bit 1-0 **TxCKPS<1:0>:** Timer2-type Clock Prescale Select bits

11 = Prescaler is 64
10 =Prescaler is 16
01 =Prescaler is 4
00 =Prescaler is 1

TABLE 22-1: SUMMARY OF REGISTERS ASSOCIATED WITH TIMER2/4/6

Name	Bit 7	Bit 6	Bit 5	Bit 4	Bit 3	Bit 2	Bit 1	Bit 0	Register on Page
INTCON	GIE	PEIE	TMR0IE	INTE	IOCIE	TMR0IF	INTF	IOCIF	89
PIE1	TMR1GIE	ADIE	RCIE	TXIE	SSP1IE	CCP1IE	TMR2IE	TMR1IE	90
PIE3	—	—	CCP4IE	CCP3IE	TMR6IE	—	TMR4IE	—	92
PIR1	TMR1GIF	ADIF	RCIF	TXIF	SSP1IF	CCP1IF	TMR2IF	TMR1IF	93
PIR3	—	—	CCP4IF	CCP3IF	TMR6IF	—	TMR4IF	—	95
PR2	Timer2 Module Period Register								189*
PR4	Timer4 Module Period Register								189*
PR6	Timer6 Module Period Register								189*
T2CON	—	TOUTPS<3:0>				TMR2ON	T2CKPS1	T2CKPS0	191
T4CON	—	T4OUTPS<3:0>				TMR4ON	T4CKPS1	T4CKPS0	191
T6CON	—	T6OUTPS<3:0>				TMR6ON	T6CKPS1	T6CKPS0	191
TMR2	Holding Register for the 8-bit TMR2 Register								189*
TMR4	Holding Register for the 8-bit TMR4 Register(1)								189*
TMR6	Holding Register for the 8-bit TMR6 Register(1)								189*

Legend: — = unimplemented location, read as '0'. Shaded cells are not used for Timer2 module.

* Page provides register information.

© 2010-2015 Microchip Technology Inc.

23.0 DATA SIGNAL MODULATOR

The Data Signal Modulator (DSM) is a peripheral which allows the user to mix a data stream, also known as a modulator signal, with a carrier signal to produce a modulated output.

Both the carrier and the modulator signals are supplied to the DSM module either internally, from the output of a peripheral, or externally through an input pin.

The modulated output signal is generated by performing a logical “AND” operation of both the carrier and modulator signals and then provided to the MDOUT pin.

The carrier signal is comprised of two distinct and separate signals. A carrier high (CARH) signal and a carrier low (CARL) signal. During the time in which the modulator (MOD) signal is in a logic high state, the DSM mixes the carrier high signal with the modulator signal. When the modulator signal is in a logic low state, the DSM mixes the carrier low signal with the modulator signal.

Using this method, the DSM can generate the following types of key modulation schemes:

- Frequency-Shift Keying (FSK)
- Phase-Shift Keying (PSK)
- On-Off Keying (OOK)

Additionally, the following features are provided within the DSM module:

- Carrier Synchronization
- Carrier Source Polarity Select
- Carrier Source Pin Disable
- Programmable Modulator Data
- Modulator Source Pin Disable
- Modulated Output Polarity Select
- Slew Rate Control

Figure 23-1 shows a Simplified Block Diagram of the Data Signal Modulator peripheral.

FIGURE 23-1: SIMPLIFIED BLOCK DIAGRAM OF THE DATA SIGNAL MODULATOR

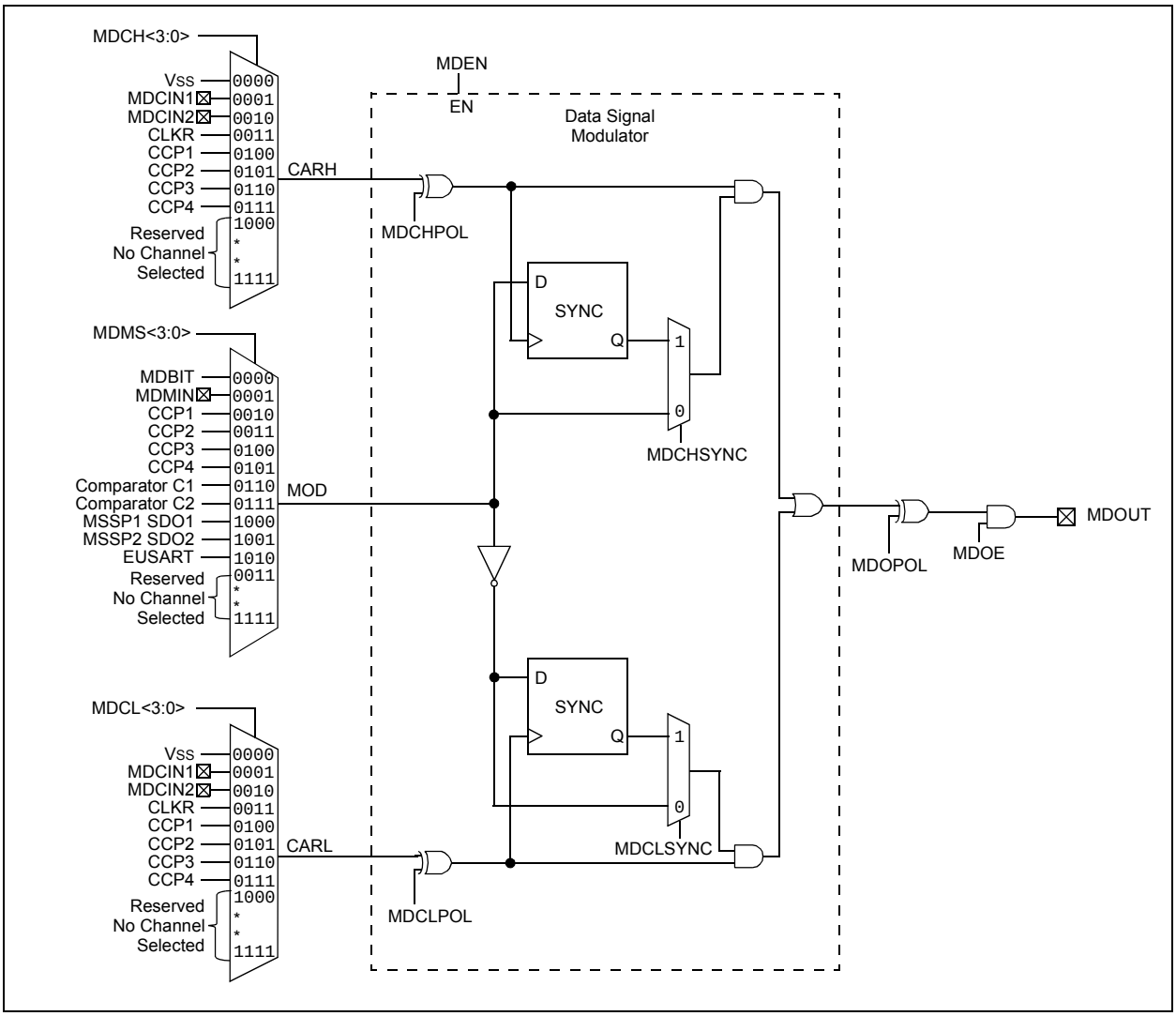

23.1 DSM Operation

The DSM module can be enabled by setting the MDEN bit in the MDCON register. Clearing the MDEN bit in the MDCON register, disables the DSM module by automatically switching the carrier high and carrier low signals to the Vss signal source. The modulator signal source is also switched to the MDBIT in the MDCON register. This not only assures that the DSM module is inactive, but that it is also consuming the least amount of current.

The values used to select the carrier high, carrier low, and modulator sources held by the modulation source, modulation high carrier, and modulation low carrier control registers are not affected when the MDEN bit is cleared and the DSM module is disabled. The values inside these registers remain unchanged while the DSM is inactive. The sources for the carrier high, carrier low and modulator signals will once again be selected when the MDEN bit is set and the DSM module is again enabled and active.

The modulated output signal can be disabled without shutting down the DSM module. The DSM module will remain active and continue to mix signals, but the output value will not be sent to the MDOUT pin. During the time that the output is disabled, the MDOUT pin will remain low. The modulated output can be disabled by clearing the MDOE bit in the MDCON register.

23.2 Modulator Signal Sources

The modulator signal can be supplied from the following sources:

- CCP1 Signal
- CCP2 Signal
- CCP3 Signal
- CCP4 Signal
- MSSP1 SDO1 Signal (SPI mode only)
- MSSP2 SDO2 Signal (SPI mode only)
- Comparator C1 Signal
- Comparator C2 Signal
- EUSART TX Signal
- External Signal on MDMIN1 pin
- MDBIT bit in the MDCON register

The modulator signal is selected by configuring the MDMS <3:0> bits in the MDSRC register.

23.3 Carrier Signal Sources

The carrier high signal and carrier low signal can be supplied from the following sources:

- CCP1 signal
- CCP2 signal
- CCP3 signal
- CCP4 signal
- Reference clock module signal
- External signal on MDCIN1 pin
- External signal on MDCIN2 pin
- Vss

The carrier high signal is selected by configuring the MDCH <3:0> bits in the MDCARH register. The carrier low signal is selected by configuring the MDCL <3:0> bits in the MDCARL register.

23.4 Carrier Synchronization

During the time when the DSM switches between carrier high and carrier low signal sources, the carrier data in the modulated output signal can become truncated. To prevent this, the carrier signal can be synchronized to the modulator signal. When synchronization is enabled, the carrier pulse that is being mixed at the time of the transition is allowed to transition low before the DSM switches over to the next carrier source.

Synchronization is enabled separately for the carrier high and carrier low signal sources. Synchronization for the carrier high signal can be enabled by setting the MDCHSYNC bit in the MDCARH register. Synchronization for the carrier low signal can be enabled by setting the MDCLSYNC bit in the MDCARL register.

Figure 23-1 through Figure 23-5 show timing diagrams of using various synchronization methods.

© 2010-2015 Microchip Technology Inc.

FIGURE 23-2: ON OFF KEYING (OOK) SYNCHRONIZATION

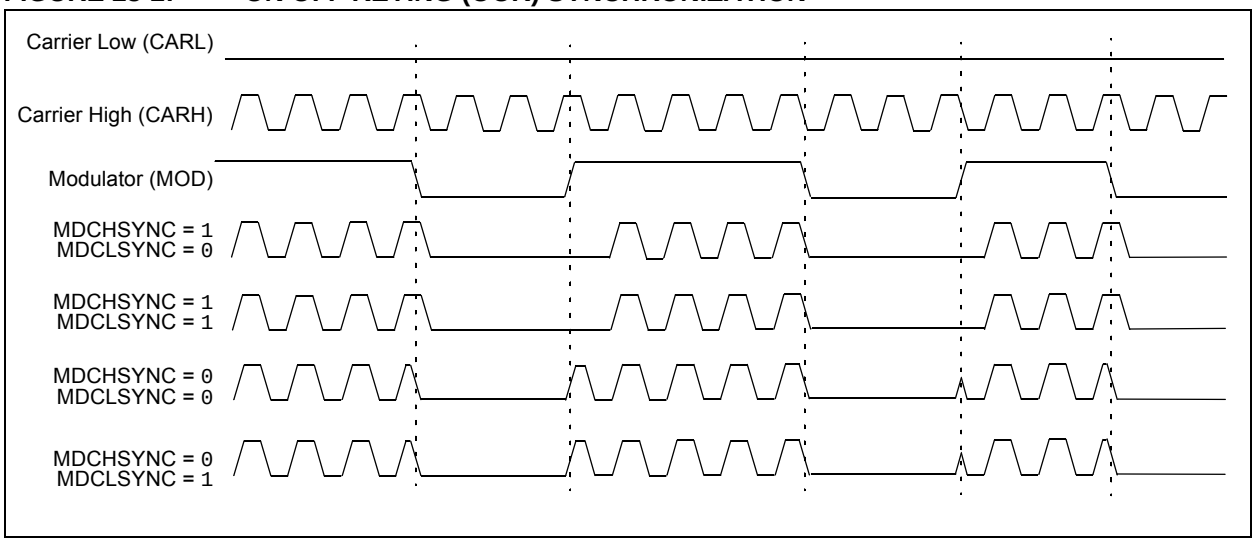

EXAMPLE 23-1: NO SYNCHRONIZATION (MDSHSYNC = 0, MDCLSYNC = 0)

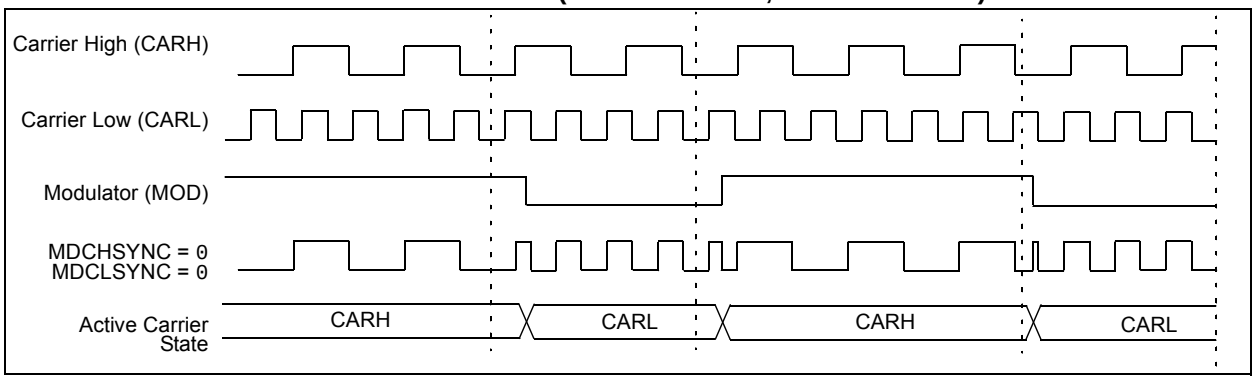

FIGURE 23-3: CARRIER HIGH SYNCHRONIZATION (MDSHSYNC = 1, MDCLSYNC = 0)

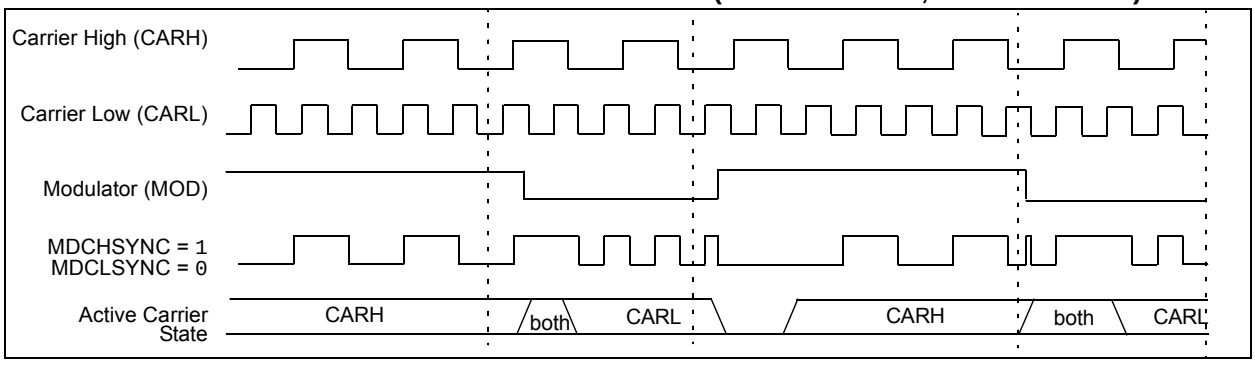

FIGURE 23-4: CARRIER LOW SYNCHRONIZATION (MDSHSYNC = 0, MDCLSYNC = 1)

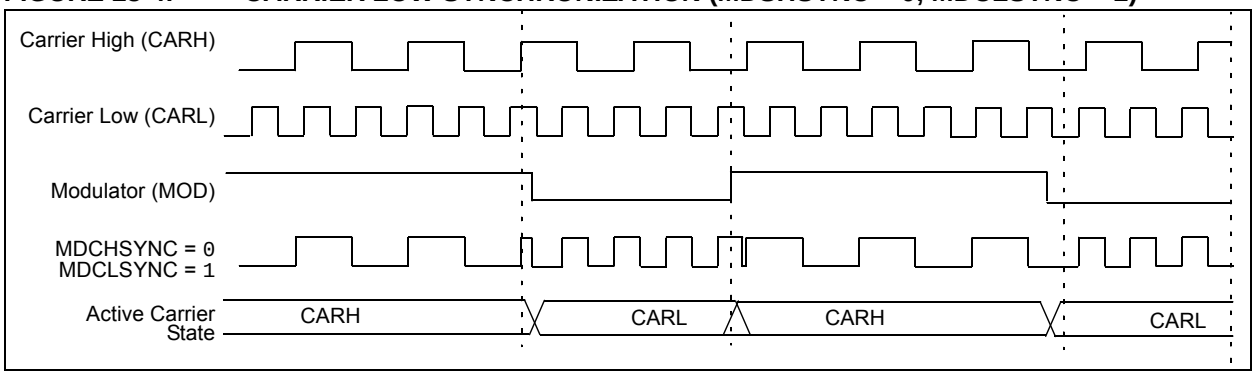

FIGURE 23-5: FULL SYNCHRONIZATION (MDSHSYNC = 1, MDCLSYNC = 1)

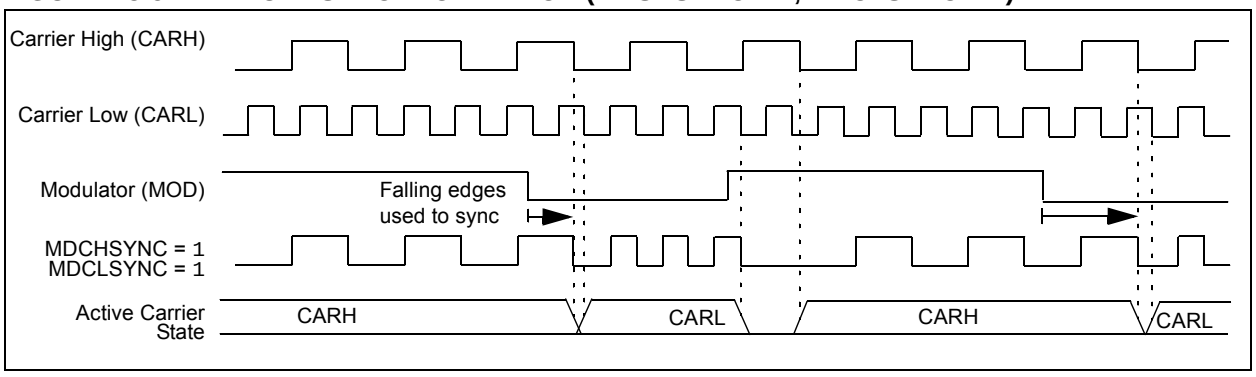

© 2010-2015 Microchip Technology Inc.

23.5 Carrier Source Polarity Select

The signal provided from any selected input source for the carrier high and carrier low signals can be inverted. Inverting the signal for the carrier high source is enabled by setting the MDCHPOL bit of the MDCARH register. Inverting the signal for the carrier low source is enabled by setting the MDCLPOL bit of the MDCARL register.

23.6 Carrier Source Pin Disable

Some peripherals assert control over their corresponding output pin when they are enabled. For example, when the CCP1 module is enabled, the output of CCP1 is connected to the CCP1 pin.

This default connection to a pin can be disabled by setting the MDCHODIS bit in the MDCARH register for the carrier high source and the MDCLODIS bit in the MDCARL register for the carrier low source.

23.7 Programmable Modulator Data

The MDBIT of the MDCON register can be selected as the source for the modulator signal. This gives the user the ability to program the value used for modulation.

23.8 Modulator Source Pin Disable

The modulator source default connection to a pin can be disabled by setting the MDMSODIS bit in the MDSRC register.

23.9 Modulated Output Polarity

The modulated output signal provided on the MDOUT pin can also be inverted. Inverting the modulated output signal is enabled by setting the MDOPOL bit of the MDCON register.

23.10 Slew Rate Control

The slew rate limitation on the output port pin can be disabled. The slew rate limitation can be removed by clearing the MDSLR bit in the MDCON register.

23.11 Operation in Sleep Mode

The DSM module is not affected by Sleep mode. The DSM can still operate during Sleep, if the carrier and modulator input sources are also still operable during Sleep.

23.12 Effects of a Reset

Upon any device Reset, the data signal modulator module is disabled. The user's firmware is responsible for initializing the module before enabling the output. The registers are reset to their default values.

REGISTER 23-1: MDCON: MODULATION CONTROL REGISTER

R/W-0/0	R/W-0/0	R/W-1/1	R/W-0/0	R-0/0	U-0	U-0	R/W-0/0
MDEN	MDOE	MDSLR	MDOPOL	MDOUT	—	—	MDBIT
bit 7							bit 0

Legend:		
R = Readable bit	W = Writable bit	U = Unimplemented bit, read as '0'
u = Bit is unchanged	x = Bit is unknown	-n/n = Value at POR and BOR/Value at all other Resets
'1' = Bit is set	'0' = Bit is cleared	

bit 7 **MDEN:** Modulator Module Enable bit
- 1 = Modulator module is enabled and mixing input signals
- 0 = Modulator module is disabled and has no output

bit 6 **MDOE:** Modulator Module Pin Output Enable bit
- 1 = Modulator pin output enabled
- 0 = Modulator pin output disabled

bit 5 **MDSLR:** MDOUT Pin Slew Rate Limiting bit
- 1 = MDOUT pin slew rate limiting enabled
- 0 = MDOUT pin slew rate limiting disabled

bit 4 **MDOPOL:** Modulator Output Polarity Select bit
- 1 = Modulator output signal is inverted
- 0 = Modulator output signal is not inverted

bit 3 **MDOUT:** Modulator Output bit
Displays the current output value of the modulator module.**(1)**

bit 2-1 **Unimplemented:** Read as '0'

bit 0 **MDBIT:** Allows software to manually set modulation source input to module**(2)**

Note 1: The modulated output frequency can be greater and asynchronous from the clock that updates this register bit, the bit value may not be valid for higher speed modulator or carrier signals.

2: MDBIT must be selected as the modulation source in the MDSRC register for this operation.

© 2010-2015 Microchip Technology Inc.

REGISTER 23-2: MDSRC: MODULATION SOURCE CONTROL REGISTER

R/W-x/u	U-0	U-0	U-0	R/W-x/u	R/W-x/u	R/W-x/u	R/W-x/u
MDMSODIS	—	—	—	MDMS<3:0>			
bit 7							bit 0

Legend:		
R = Readable bit	W = Writable bit	U = Unimplemented bit, read as '0'
u = Bit is unchanged	x = Bit is unknown	-n/n = Value at POR and BOR/Value at all other Resets
'1' = Bit is set	'0' = Bit is cleared	

bit 7 **MDMSODIS:** Modulation Source Output Disable

1 = Output signal driving the peripheral output pin (selected by MDMS<3:0>) is disabled
0 = Output signal driving the peripheral output pin (selected by MDMS<3:0>) is enabled

bit 6-4 **Unimplemented:** Read as '0'

bit 3-0 **MDMS<3:0>** Modulation Source Selection bits

1111 = Reserved. No channel connected.
1110 = Reserved. No channel connected.
1101 = Reserved. No channel connected.
1100 = Reserved. No channel connected.
1011 = Reserved. No channel connected.
1010 = EUSART TX output
1001 = MSSP2 SDOx output
1000 = MSSP1 SDOx output
0111 = Comparator2 output
0110 = Comparator1 output
0101 = CCP4 output (PWM Output mode only)
0100 = CCP3 output (PWM Output mode only)
0011 = CCP2 output (PWM Output mode only)
0010 = CCP1 output (PWM Output mode only)
0001 = MDMIN port pin
0000 = MDBIT bit of MDCON register is modulation source

Note 1: Narrowed carrier pulse widths or spurs may occur in the signal stream if the carrier is not synchronized.

REGISTER 23-3: MDCARH: MODULATION HIGH CARRIER CONTROL REGISTER

R/W-x/u	R/W-x/u	R/W-x/u	U-0	R/W-x/u	R/W-x/u	R/W-x/u	R/W-x/u
MDCHODIS	MDCHPOL	MDCHSYNC	—	MDCH<3:0>			
bit 7							bit 0

Legend:		
R = Readable bit	W = Writable bit	U = Unimplemented bit, read as '0'
u = Bit is unchanged	x = Bit is unknown	-n/n = Value at POR and BOR/Value at all other Resets
'1' = Bit is set	'0' = Bit is cleared	

bit 7 **MDCHODIS:** Modulator High Carrier Output Disable

1 = Output signal driving the peripheral output pin (selected by MDCH<3:0>) is disabled
0 = Output signal driving the peripheral output pin (selected by MDCH<3:0>) is enabled

bit 6 **MDCHPOL:** Modulator High Carrier Polarity Select bit

1 = Selected high carrier signal is inverted
0 = Selected high carrier signal is not inverted

bit 5 **MDCHSYNC:** Modulator High Carrier Synchronization Enable bit

1 = Modulator waits for a falling edge on the high time carrier signal before allowing a switch to the low time carrier
0 = Modulator Output is not synchronized to the high time carrier signal **(1)**

bit 4 **Unimplemented:** Read as '0'

bit 3-0 **MDCH<3:0>** Modulator Data High Carrier Selection bits **(1)**

1111 = Reserved. No channel connected.
•
•
•
1000 = Reserved. No channel connected.
0111 = CCP4 output (PWM Output mode only)
0110 = CCP3 output (PWM Output mode only)
0101 = CCP2 output (PWM Output mode only)
0100 = CCP1 output (PWM Output mode only)
0011 = Reference clock module signal
0010 = MDCIN2 port pin
0001 = MDCIN1 port pin
0000 = Vss

Note 1: Narrowed carrier pulse widths or spurs may occur in the signal stream if the carrier is not synchronized.

© 2010-2015 Microchip Technology Inc.

REGISTER 23-4: MDCARL: MODULATION LOW CARRIER CONTROL REGISTER

R/W-x/u	R/W-x/u	R/W-x/u	U-0	R/W-x/u	R/W-x/u	R/W-x/u	R/W-x/u
MDCLODIS	MDCLPOL	MDCLSYNC	—	MDCL<3:0>			
bit 7							bit 0

Legend:		
R = Readable bit	W = Writable bit	U = Unimplemented bit, read as '0'
u = Bit is unchanged	x = Bit is unknown	-n/n = Value at POR and BOR/Value at all other Resets
'1' = Bit is set	'0' = Bit is cleared	

bit 7 **MDCLODIS:** Modulator Low Carrier Output Disable bit
- 1 = Output signal driving the peripheral output pin (selected by MDCL<3:0> of the MDCARL register) is disabled
- 0 = Output signal driving the peripheral output pin (selected by MDCL<3:0> of the MDCARL register) is enabled

bit 6 **MDCLPOL:** Modulator Low Carrier Polarity Select bit
- 1 = Selected low carrier signal is inverted
- 0 = Selected low carrier signal is not inverted

bit 5 **MDCLSYNC:** Modulator Low Carrier Synchronization Enable bit
- 1 = Modulator waits for a falling edge on the low time carrier signal before allowing a switch to the high time carrier
- 0 = Modulator output is not synchronized to the low time carrier signal(1)

bit 4 **Unimplemented:** Read as '0'

bit 3-0 **MDCL<3:0>** Modulator Data High Carrier Selection bits (1)
- 1111 = Reserved. No channel connected.
- •
- •
- •
- 1000 = Reserved. No channel connected.
- 0111 = CCP4 output (PWM Output mode only)
- 0110 = CCP3 output (PWM Output mode only)
- 0101 = CCP2 output (PWM Output mode only)
- 0100 = CCP1 output (PWM Output mode only)
- 0011 = Reference clock module signal
- 0010 = MDCIN2 port pin
- 0001 = MDCIN1 port pin
- 0000 = VSS

Note 1: Narrowed carrier pulse widths or spurs may occur in the signal stream if the carrier is not synchronized.

TABLE 23-1: SUMMARY OF REGISTERS ASSOCIATED WITH DATA SIGNAL MODULATOR MODE

Name	Bit 7	Bit 6	Bit 5	Bit 4	Bit 3	Bit 2	Bit 1	Bit 0	Register on Page
MDCARH	MDCHODIS	MDCHPOL	MDCHSYNC	—	MDCH<3:0>				200
MDCARL	MDCLODIS	MDCLPOL	MDCLSYNC	—	MDCL<3:0>				201
MDCON	MDEN	MDOE	MDSLR	MDOPOL	MDOUT	—	—	MDBIT	198
MDSRC	MDMSODIS	—	—	—	MDMS<3:0>				199

Legend: — = unimplemented, read as '0'. Shaded cells are not used in the Data Signal Modulator mode.

24.0 CAPTURE/COMPARE/PWM MODULES

The Capture/Compare/PWM module is a peripheral which allows the user to time and control different events, and to generate Pulse-Width Modulation (PWM) signals. In Capture mode, the peripheral allows the timing of the duration of an event. The Compare mode allows the user to trigger an external event when a predetermined amount of time has expired. The PWM mode can generate Pulse-Width Modulated signals of varying frequency and duty cycle.

This family of devices contains two Enhanced Capture/Compare/PWM modules (ECCP1 and ECCP2) and two standard Capture/Compare/PWM modules (CCP3 and CCP4).

The capture and compare functions are identical for all four CCP modules (ECCP1, ECCP2, CCP3, and CCP4). The only differences between CCP modules are in the Pulse-Width Modulation (PWM) function. The standard PWM function is identical in modules, CCP3 and CCP4. In CCP modules ECCP1 and ECCP2, the Enhanced PWM function has slight variations from one another. Full-Bridge ECCP modules have four available I/O pins while Half-Bridge ECCP modules only have two available I/O pins. See Table 24-1 for more information.

Note 1: In devices with more than one CCP module, it is very important to pay close attention to the register names used. A number placed after the module acronym is used to distinguish between separate modules. For example, the CCP1CON and CCP2CON control the same operational aspects of two completely different CCP modules.

2: Throughout this section, generic references to a CCP module in any of its operating modes may be interpreted as being equally applicable to ECCP1, ECCP2, CCP3 and CCP4. Register names, module signals, I/O pins, and bit names may use the generic designator 'x' to indicate the use of a numeral to distinguish a particular module, when required.

TABLE 24-1: PWM RESOURCES

Device Name	ECCP1	ECCP2	CCP3	CCP4
PIC16(L)F1824/8	Enhanced PWM Full-Bridge	Enhanced PWM Half-Bridge	Standard PWM	Standard PWM

© 2010-2015 Microchip Technology Inc.

24.1 Capture Mode

The Capture mode function described in this section is available and identical for CCP modules ECCP1, ECCP2, CCP3 and CCP4.

Capture mode makes use of the 16-bit Timer1 resource. When an event occurs on the CCPx pin, the 16-bit CCPRxH:CCPRxL register pair captures and stores the 16-bit value of the TMR1H:TMR1L register pair, respectively. An event is defined as one of the following and is configured by the CCPxM<3:0> bits of the CCPxCON register:

- Every falling edge
- Every rising edge
- Every 4th rising edge
- Every 16th rising edge

When a capture is made, the Interrupt Request Flag bit CCPxIF of the PIRx register is set. The interrupt flag must be cleared in software. If another capture occurs before the value in the CCPRxH, CCPRxL register pair is read, the old captured value is overwritten by the new captured value.

Figure 24-1 shows a simplified diagram of the Capture operation.

24.1.1 CCP PIN CONFIGURATION

In Capture mode, the CCPx pin should be configured as an input by setting the associated TRIS control bit.

Also, the CCPx pin function can be moved to alternative pins using the APFCON1 register. Refer to **Section 12.1 "Alternate Pin Function"** for more details.

Note:	If the CCPx pin is configured as an output, a write to the port can cause a capture condition.

FIGURE 24-1: CAPTURE MODE OPERATION BLOCK DIAGRAM

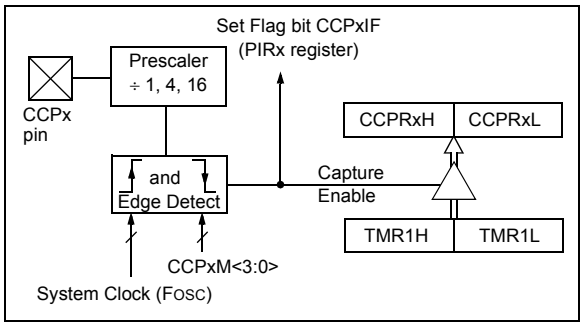

24.1.2 TIMER1 MODE RESOURCE

Timer1 must be running in Timer mode or Synchronized Counter mode for the CCP module to use the capture feature. In Asynchronous Counter mode, the capture operation may not work.

See **Section 21.0 "Timer1 Module with Gate Control"** for more information on configuring Timer1.

24.1.3 SOFTWARE INTERRUPT MODE

When the Capture mode is changed, a false capture interrupt may be generated. The user should keep the CCPxIE interrupt enable bit of the PIEx register clear to avoid false interrupts. Additionally, the user should clear the CCPxIF interrupt flag bit of the PIRx register following any change in Operating mode.

Note:	Clocking Timer1 from the system clock (FOSC) should not be used in Capture mode. In order for Capture mode to recognize the trigger event on the CCPx pin, Timer1 must be clocked from the instruction clock (FOSC/4) or from an external clock source.

24.1.4 CCP PRESCALER

There are four prescaler settings specified by the CCPxM<3:0> bits of the CCPxCON register. Whenever the CCP module is turned off, or the CCP module is not in Capture mode, the prescaler counter is cleared. Any Reset will clear the prescaler counter.

Switching from one capture prescaler to another does not clear the prescaler and may generate a false interrupt. To avoid this unexpected operation, turn the module off by clearing the CCPxCON register before changing the prescaler. Example 24-1 demonstrates the code to perform this function.

EXAMPLE 24-1: CHANGING BETWEEN CAPTURE PRESCALERS

```
BANKSEL CCPxCON     ;Set Bank bits to point
                    ;to CCPxCON
CLRF    CCPxCON     ;Turn CCP module off
MOVLW   NEW_CAPT_PS ;Load the W reg with
                    ;the new prescaler
                    ;move value and CCP ON
MOVWF   CCPxCON     ;Load CCPxCON with this
                    ;value
```

24.1.5 CAPTURE DURING SLEEP

Capture mode depends upon the Timer1 module for proper operation. There are two options for driving the Timer1 module in Capture mode. It can be driven by the instruction clock (FOSC/4), or by an external clock source.

When Timer1 is clocked by FOSC/4, Timer1 will not increment during Sleep. When the device wakes from Sleep, Timer1 will continue from its previous state.

Capture mode will operate during Sleep when Timer1 is clocked by an external clock source.

24.1.6 ALTERNATE PIN LOCATIONS

This module incorporates I/O pins that can be moved to other locations with the use of the alternate pin function registers, APFCON0 and APFCON1. To determine which pins can be moved and what their default locations are upon a Reset, see **Section 12.1 "Alternate Pin Function"** for more information.

TABLE 24-2: SUMMARY OF REGISTERS ASSOCIATED WITH CAPTURE

Name	Bit 7	Bit 6	Bit 5	Bit 4	Bit 3	Bit 2	Bit 1	Bit 0	Register on Page
APFCON1	—	—	—	—	P1DSEL	P1CSEL	P2BSEL	CCP2SEL	118
CCPxCON	PxM<1:0>(1)		DCxB<1:0>		CCPxM<3:0>				225
CCPRxL	Capture/Compare/PWM Register x Low Byte (LSB)								203*
CCPRxH	Capture/Compare/PWM Register x High Byte (MSB)								203*
CMxCON0	CxON	CxOUT	CxOE	CxPOL	—	CxSP	CxHYS	CxSYNC	171
CMxCON1	CxINTP	CxINTN	CxPCH<1:0>		—	—	CxNCH<1:0>		172
INLVLA	—	—	INLVLA5	INLVLA4	INLVLA3	INLVLA2	INLVLA1	INLVLA0	123
INLVLC	INLVLC7(2)	INLVLC6(2)	INLVLC5	INLVLC4	INLVLC3	INLVLC2	INLVLC1	INLVLC0	134
INTCON	GIE	PEIE	TMR0IE	INTE	IOCIE	TMR0IF	INTF	IOCIF	89
PIE1	TMR1GIE	ADIE	RCIE	TXIE	SSP1IE	CCP1IE	TMR2IE	TMR1IE	90
PIE2	OSFIE	C2IE	C1IE	EEIE	BCL1IE	—	—	CCP2IE	91
PIE3	—	—	CCP4IE	CCP3IE	TMR6IE	—	TMR4IE	—	92
PIR1	TMR1GIF	ADIF	RCIF	TXIF	SSP1IF	CCP1IF	TMR2IF	TMR1IF	93
PIR2	OSFIF	C2IF	C1IF	EEIF	BCL1IF	—	—	CCP2IF	94
PIR3	—	—	CCP4IF	CCP3IF	TMR6IF	—	TMR4IF	—	95
T1CON	TMR1CS1	TMR1CS0	T1CKPS1	T1CKPS0	T1OSCEN	$\overline{\text{T1SYNC}}$	—	TMR1ON	186
T1GCON	TMR1GE	T1GPOL	T1GTM	T1GSPM	T1GGO/DONE	T1GVAL	T1GSS1	T1GSS0	187
TMR1L	Holding Register for the Least Significant Byte of the 16-bit TMR1 Register								182*
TMR1H	Holding Register for the Most Significant Byte of the 16-bit TMR1 Register								182*
TRISA	—	—	TRISA5	TRISA4	TRISA3	TRISA2	TRISA1	TRISA0	121
TRISC	TRISC7(2)	TRISC6(2)	TRISC5	TRISC4	TRISC3	TRISC2	TRISC1	TRISC0	132

Legend: — = unimplemented locations, read as '0'. Shaded cells are not used by the Capture.

* Page provides register information.

Note 1: Applies to ECCP modules only.

2: PIC16(L)F1828 only.

© 2010-2015 Microchip Technology Inc.

24.2 Compare Mode

The Compare mode function described in this section is available and identical for CCP modules ECCP1, ECCP2, CCP3 and CCP4.

Compare mode makes use of the 16-bit Timer1 resource. The 16-bit value of the CCPRxH:CCPRxL register pair is constantly compared against the 16-bit value of the TMR1H:TMR1L register pair. When a match occurs, one of the following events can occur:

- Toggle the CCPx output
- Set the CCPx output
- Clear the CCPx output
- Generate a Special Event Trigger
- Generate a Software Interrupt

The action on the pin is based on the value of the CCPxM<3:0> control bits of the CCPxCON register. At the same time, the interrupt flag CCPxIF bit is set.

All Compare modes can generate an interrupt.

Figure 24-2 shows a simplified diagram of the Compare operation.

FIGURE 24-2: COMPARE MODE OPERATION BLOCK DIAGRAM

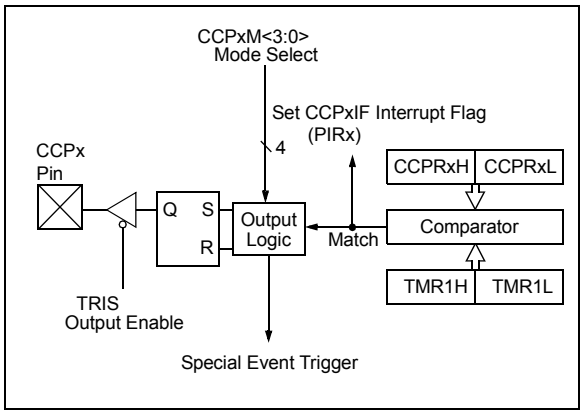

24.2.1 CCP PIN CONFIGURATION

The user must configure the CCPx pin as an output by clearing the associated TRIS bit.

Also, the CCPx pin function can be moved to alternative pins using the APFCON1 register. Refer to **Section 12.1 "Alternate Pin Function"** for more details.

Note:	Clearing the CCPxCON register will force the CCPx compare output latch to the default low level. This is not the PORT I/O data latch.

24.2.2 TIMER1 MODE RESOURCE

In Compare mode, Timer1 must be running in either Timer mode or Synchronized Counter mode. The compare operation may not work in Asynchronous Counter mode.

See **Section 21.0 "Timer1 Module with Gate Control"** for more information on configuring Timer1.

Note:	Clocking Timer1 from the system clock (FOSC) should not be used in Compare mode. In order for Compare mode to recognize the trigger event on the CCPx pin, TImer1 must be clocked from the instruction clock (FOSC/4) or from an external clock source.

24.2.3 SOFTWARE INTERRUPT MODE

When Generate Software Interrupt mode is chosen (CCPxM<3:0> = 1010), the CCPx module does not assert control of the CCPx pin (see the CCPxCON register).

24.2.4 SPECIAL EVENT TRIGGER

When Special Event Trigger mode is chosen (CCPxM<3:0> = 1011), the CCPx module does the following:

- Resets Timer1
- Starts an ADC conversion if ADC is enabled

The CCPx module does not assert control of the CCPx pin in this mode.

The Special Event Trigger output of the CCP occurs immediately upon a match between the TMR1H, TMR1L register pair and the CCPRxH, CCPRxL register pair. The TMR1H, TMR1L register pair is not reset until the next rising edge of the Timer1 clock. The Special Event Trigger output starts an A/D conversion (if the A/D module is enabled). This allows the CCPRxH, CCPRxL register pair to effectively provide a 16-bit programmable period register for Timer1.

TABLE 24-3: SPECIAL EVENT TRIGGER

Device	CCPx/ECCPx
PIC16(L)F1824/8	CCP4

Refer to **Section 16.2.5 "Special Event Trigger"** for more information.

Note 1:	The Special Event Trigger from the CCP module does not set interrupt flag bit TMR1IF of the PIR1 register.
2:	Removing the match condition by changing the contents of the CCPRxH and CCPRxL register pair, between the clock edge that generates the Special Event Trigger and the clock edge that generates the Timer1 Reset, will preclude the Reset from occurring.

24.2.5 COMPARE DURING SLEEP

The Compare mode is dependent upon the system clock (FOSC) for proper operation. Since FOSC is shut down during Sleep mode, the Compare mode will not function properly during Sleep.

24.2.6 ALTERNATE PIN LOCATIONS

This module incorporates I/O pins that can be moved to other locations with the use of the alternate pin function registers, APFCON0 and APFCON1. To determine which pins can be moved and what their default locations are upon a Reset, see **Section 12.1 "Alternate Pin Function"** for more information.

TABLE 24-4: SUMMARY OF REGISTERS ASSOCIATED WITH COMPARE

Name	Bit 7	Bit 6	Bit 5	Bit 4	Bit 3	Bit 2	Bit 1	Bit 0	Register on Page
APFCON1	—	—	—	—	P1DSEL	P1CSEL	P2BSEL	CCP2SEL	118
CCPxCON	PxM<1:0>(1)		DCxB<1:0>		CCPxM<3:0>				225
CCPRxL	Capture/Compare/PWM Register x Low Byte (LSB)								203*
CCPRxH	Capture/Compare/PWM Register x High Byte (MSB)								203*
INLVLA	—	—	INLVLA5	INLVLA4	INLVLA3	INLVLA2	INLVLA1	INLVLA0	123
INLVLC	INLVLC7(2)	INLVLC6(2)	INLVLC5	INLVLC4	INLVLC3	INLVLC2	INLVLC1	INLVLC0	134
INTCON	GIE	PEIE	TMR0IE	INTE	IOCIE	TMR0IF	INTF	IOCIF	89
PIE1	TMR1GIE	ADIE	RCIE	TXIE	SSP1IE	CCP1IE	TMR2IE	TMR1IE	90
PIE2	OSFIE	C2IE	C1IE	EEIE	BCL1IE	—	—	CCP2IE	91
PIE3	—	—	CCP4IE	CCP3IE	TMR6IE	—	TMR4IE	—	92
PIR1	TMR1GIF	ADIF	RCIF	TXIF	SSP1IF	CCP1IF	TMR2IF	TMR1IF	93
PIR2	OSFIF	C2IF	C1IF	EEIF	BCL1IF	—	—	CCP2IF	94
PIR3	—	—	CCP4IF	CCP3IF	TMR6IF	—	TMR4IF	—	95
T1CON	TMR1CS<1:0>		T1CKPS<1:0>		T1OSCEN	$\overline{\text{T1SYNC}}$	—	TMR1ON	186
T1GCON	TMR1GE	T1GPOL	T1GTM	T1GSPM	T1GGO/DONE	T1GVAL	T1GSS<1:0>		187
TMR1L	Holding Register for the Least Significant Byte of the 16-bit TMR1 Register								182*
TMR1H	Holding Register for the Most Significant Byte of the 16-bit TMR1 Register								182*
TRISA	—	—	TRISA5	TRISA4	TRISA3	TRISA2	TRISA1	TRISA0	121
TRISC	TRISC7(2)	TRISC6(2)	TRISC5	TRISC4	TRISC3	TRISC2	TRISC1	TRISC0	132

Legend: — = unimplemented location, read as '0'. Shaded cells are not used by Compare mode.

* Page provides register information.

Note 1: Applies to ECCP modules only.

2: PIC16(L)F1828 only.

© 2010-2015 Microchip Technology Inc.

24.3 PWM Overview

Pulse-Width Modulation (PWM) is a scheme that provides power to a load by switching quickly between fully on and fully off states. The PWM signal resembles a square wave where the high portion of the signal is considered the on state and the low portion of the signal is considered the off state. The high portion, also known as the pulse width, can vary in time and is defined in steps. A larger number of steps applied, which lengthens the pulse width, also supplies more power to the load. Lowering the number of steps applied, which shortens the pulse width, supplies less power. The PWM period is defined as the duration of one complete cycle or the total amount of on and off time combined.

PWM resolution defines the maximum number of steps that can be present in a single PWM period. A higher resolution allows for more precise control of the pulse width time and in turn the power that is applied to the load.

The term duty cycle describes the proportion of the on time to the off time and is expressed in percentages, where 0% is fully off and 100% is fully on. A lower duty cycle corresponds to less power applied and a higher duty cycle corresponds to more power applied.

Figure 24-3 shows a typical waveform of the PWM signal.

24.3.1 STANDARD PWM OPERATION

The standard PWM function described in this section is available and identical for CCP modules ECCP1, ECCP2, CCP3 and CCP4.

The standard PWM mode generates a Pulse-Width Modulation (PWM) signal on the CCPx pin with up to 10 bits of resolution. The period, duty cycle, and resolution are controlled by the following registers:

- PRx registers
- TxCON registers
- CCPRxL registers
- CCPxCON registers

Figure 24-4 shows a simplified block diagram of PWM operation.

Note 1:	The corresponding TRIS bit must be cleared to enable the PWM output on the CCPx pin.
2:	Clearing the CCPxCON register will relinquish control of the CCPx pin.

FIGURE 24-3: CCP PWM OUTPUT SIGNAL

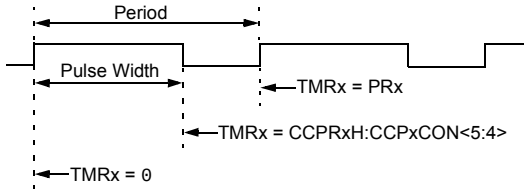

FIGURE 24-4: SIMPLIFIED PWM BLOCK DIAGRAM

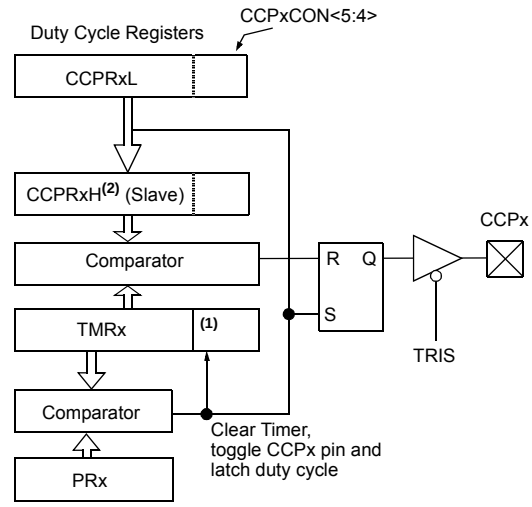

Note 1: The 8-bit timer TMRx register is concatenated with the 2-bit internal system clock (FOSC), or 2 bits of the prescaler, to create the 10-bit time base.

2: In PWM mode, CCPRxH is a read-only register.

24.3.2 SETUP FOR PWM OPERATION

The following steps should be taken when configuring the CCP module for standard PWM operation:

1. Disable the CCPx pin output driver by setting the associated TRIS bit.
2. Load the PRx register with the PWM period value.
3. Configure the CCP module for the PWM mode by loading the CCPxCON register with the appropriate values.
4. Load the CCPRxL register and the DCxBx bits of the CCPxCON register, with the PWM duty cycle value.
5. Configure and start Timer2/4/6:
   - Select the Timer2/4/6 resource to be used for PWM generation by setting the CxTSEL<1:0> bits in the CCPTMRSx register.
   - Clear the TMRxIF interrupt flag bit of the PIRx register. See Note below.
   - Configure the TxCKPS bits of the TxCON register with the Timer prescale value.
   - Enable the Timer by setting the TMRxON bit of the TxCON register.
6. Enable PWM output pin:
   - Wait until the Timer overflows and the TMRxIF bit of the PIRx register is set. See Note below.
   - Enable the CCPx pin output driver by clearing the associated TRIS bit.

Note:	In order to send a complete duty cycle and period on the first PWM output, the above steps must be included in the setup sequence. If it is not critical to start with a complete PWM signal on the first output, then step 6 may be ignored.

24.3.3 TIMER2/4/6 TIMER RESOURCE

The PWM standard mode makes use of one of the 8-bit Timer2/4/6 timer resources to specify the PWM period.

Configuring the CxTSEL<1:0> bits in the CCPTMRSx register selects which Timer2/4/6 timer is used.

24.3.4 PWM PERIOD

The PWM period is specified by the PRx register of Timer2/4/6. The PWM period can be calculated using the formula of Equation 24-1.

EQUATION 24-1: PWM PERIOD

$$PWM\ Period = [(PRx) + 1] \bullet 4 \bullet T_{OSC} \bullet (TMRx\ Prescale\ Value)$$

Note 1: $T_{OSC} = 1/F_{OSC}$

When TMRx is equal to PRx, the following three events occur on the next increment cycle:

- TMRx is cleared
- The CCPx pin is set. (Exception: If the PWM duty cycle = 0%, the pin will not be set.)
- The PWM duty cycle is latched from CCPRxL into CCPRxH

Note:	The Timer postscaler (see **Section 22.1 "Timer2/4/6 Operation"**) is not used in the determination of the PWM frequency.

24.3.5 PWM DUTY CYCLE

The PWM duty cycle is specified by writing a 10-bit value to multiple registers: CCPRxL register and DCxB<1:0> bits of the CCPxCON register. The CCPRxL contains the eight MSbs and the DCxB<1:0> bits of the CCPxCON register contain the two LSbs. CCPRxL and DCxB<1:0> bits of the CCPxCON register can be written to at any time. The duty cycle value is not latched into CCPRxH until after the period completes (i.e., a match between PRx and TMRx registers occurs). While using the PWM, the CCPRxH register is read-only.

Equation 24-2 is used to calculate the PWM pulse width.

Equation 24-3 is used to calculate the PWM duty cycle ratio.

EQUATION 24-2: PULSE WIDTH

$$Pulse\ Width = (CCPRxL{:}CCPxCON\langle 5{:}4\rangle) \bullet T_{OSC} \bullet (TMRx\ Prescale\ Value)$$

EQUATION 24-3: DUTY CYCLE RATIO

$$Duty\ Cycle\ Ratio = \frac{(CCPRxL{:}CCPxCON\langle 5{:}4\rangle)}{4(PRx + 1)}$$

The CCPRxH register and a 2-bit internal latch are used to double buffer the PWM duty cycle. This double buffering is essential for glitchless PWM operation.

The 8-bit timer TMRx register is concatenated with either the 2-bit internal system clock (FOSC), or two bits of the prescaler, to create the 10-bit time base. The system clock is used if the Timer2/4/6 prescaler is set to 1:1.

When the 10-bit time base matches the CCPRxH and 2-bit latch, then the CCPx pin is cleared (see Figure 24-4).

© 2010-2015 Microchip Technology Inc.

24.3.6 PWM RESOLUTION

The resolution determines the number of available duty cycles for a given period. For example, a 10-bit resolution will result in 1024 discrete duty cycles, whereas an 8-bit resolution will result in 256 discrete duty cycles.

The maximum PWM resolution is 10 bits when PRx is 255. The resolution is a function of the PRx register value as shown by Equation 24-4.

EQUATION 24-4: PWM RESOLUTION

$$Resolution = \frac{log[4(PRx + 1)]}{log(2)} \ bits$$

Note: If the pulse width value is greater than the period the assigned PWM pin(s) will remain unchanged.

TABLE 24-5: EXAMPLE PWM FREQUENCIES AND RESOLUTIONS (FOSC = 32 MHz)

PWM Frequency	1.95 kHz	7.81 kHz	31.25 kHz	125 kHz	250 kHz	333.3 kHz
Timer Prescale	16	4	1	1	1	1
PRx Value	0xFF	0xFF	0xFF	0x3F	0x1F	0x17
Maximum Resolution (bits)	10	10	10	8	7	6.6

TABLE 24-6: EXAMPLE PWM FREQUENCIES AND RESOLUTIONS (FOSC = 20 MHz)

PWM Frequency	1.22 kHz	4.88 kHz	19.53 kHz	78.12 kHz	156.3 kHz	208.3 kHz
Timer Prescale	16	4	1	1	1	1
PRx Value	0xFF	0xFF	0xFF	0x3F	0x1F	0x17
Maximum Resolution (bits)	10	10	10	8	7	6.6

TABLE 24-7: EXAMPLE PWM FREQUENCIES AND RESOLUTIONS (FOSC = 8 MHz)

PWM Frequency	1.22 kHz	4.90 kHz	19.61 kHz	76.92 kHz	153.85 kHz	200.0 kHz
Timer Prescale	16	4	1	1	1	1
PRx Value	0x65	0x65	0x65	0x19	0x0C	0x09
Maximum Resolution (bits)	8	8	8	6	5	5

24.3.7 OPERATION IN SLEEP MODE

In Sleep mode, the TMRx register will not increment and the state of the module will not change. If the CCPx pin is driving a value, it will continue to drive that value. When the device wakes up, TMRx will continue from its previous state.

24.3.8 CHANGES IN SYSTEM CLOCK FREQUENCY

The PWM frequency is derived from the system clock frequency. Any changes in the system clock frequency will result in changes to the PWM frequency. See **Section 5.0 "Oscillator Module (With Fail-Safe Clock Monitor)"** for additional details.

24.3.9 EFFECTS OF RESET

Any Reset will force all ports to Input mode and the CCP registers to their Reset states.

24.3.10 ALTERNATE PIN LOCATIONS

This module incorporates I/O pins that can be moved to other locations with the use of the alternate pin function registers, APFCON0 and APFCON1. To determine which pins can be moved and what their default locations are upon a Reset, see **Section 12.1 "Alternate Pin Function"** for more information.

TABLE 24-8: SUMMARY OF REGISTERS ASSOCIATED WITH STANDARD PWM

Name	Bit 7	Bit 6	Bit 5	Bit 4	Bit 3	Bit 2	Bit 1	Bit 0	Register on Page
APFCON1	—	—	—	—	P1DSEL	P1CSEL	P2BSEL	CCP2SEL	118
CCPxCON	PxM<1:0>(1)		DCxB<1:0>		CCPxM<3:0>				225
CCPTMRS0	C4TSEL<1:0>		C3TSEL<1:0>		C2TSEL<1:0>		C1TSEL<1:0>		226
INLVLA	—	—	INLVLA5	INLVLA4	INLVLA3	INLVLA2	INLVLA1	INLVLA0	123
INLVLC	INLVLC7(2)	INLVLC6(2)	INLVLC5	INLVLC4	INLVLC3	INLVLC2	INLVLC1	INLVLC0	134
INTCON	GIE	PEIE	TMR0IE	INTE	IOCIE	TMR0IF	INTF	IOCIF	89
PIE1	TMR1GIE	ADIE	RCIE	TXIE	SSP1IE	CCP1IE	TMR2IE	TMR1IE	90
PIE2	OSFIE	C2IE	C1IE	EEIE	BCLIE	—	—	CCP2IE	91
PIE3	—	—	CCP4IE	CCP3IE	TMR6IE	—	TMR4IE	—	92
PIR1	TMR1GIF	ADIF	RCIF	TXIF	SSP1IF	CCP1IF	TMR2IF	TMR1IF	93
PIR2	OSFIF	C2IF	C1IF	EEIF	BCLIF	—	—	CCP2IF	94
PIR3	—	—	CCP4IF	CCP3IF	TMR6IF	—	TMR4IF	—	95
PRx	Timer2/4/6 Period Register								189*
TxCON	—	TxOUTPS<3:0>				TMRxON	TxCKPS<:0>1		191
TMRx	Timer2/4/6 Module Register								189*
TRISA	—	—	TRISA5	TRISA4	TRISA3	TRISA2	TRISA1	TRISA0	121
TRISC	TRISC7(2)	TRISC6(2)	TRISC5	TRISC4	TRISC3	TRISC2	TRISC1	TRISC0	132

Legend: — = unimplemented location, read as '0'. Shaded cells are not used by the PWM.

* Page provides register information.

Note 1: Applies to ECCP modules only.

2: PIC16(L)F1828 only.

© 2010-2015 Microchip Technology Inc.

24.4 PWM (Enhanced Mode)

The enhanced PWM function described in this section is available for CCP modules ECCP1, ECCP2 and ECCP3, with any differences between modules noted.

The enhanced PWM mode generates a Pulse-Width Modulation (PWM) signal on up to four different output pins with up to 10 bits of resolution. The period, duty cycle, and resolution are controlled by the following registers:

- PRx registers
- TxCON registers
- CCPRxL registers
- CCPxCON registers

The ECCP modules have the following additional PWM registers which control Auto-shutdown, Auto-restart, Dead-band Delay and PWM Steering modes:

- CCPxAS registers
- PSTRxCON registers
- PWMxCON registers

The enhanced PWM module can generate the following five PWM Output modes:

- Single PWM
- Half-Bridge PWM
- Full-Bridge PWM, Forward Mode
- Full-Bridge PWM, Reverse Mode
- Single PWM with PWM Steering Mode

To select an Enhanced PWM Output mode, the PxM bits of the CCPxCON register must be configured appropriately.

The PWM outputs are multiplexed with I/O pins and are designated PxA, PxB, PxC and PxD. The polarity of the PWM pins is configurable and is selected by setting the CCPxM bits in the CCPxCON register appropriately.

Figure 24-5 shows an example of a simplified block diagram of the Enhanced PWM module.

Table 24-9 shows the pin assignments for various Enhanced PWM modes.

Note 1: The corresponding TRIS bit must be cleared to enable the PWM output on the CCPx pin.

2: Clearing the CCPxCON register will relinquish control of the CCPx pin.

3: Any pin not used in the enhanced PWM mode is available for alternate pin functions, if applicable.

4: To prevent the generation of an incomplete waveform when the PWM is first enabled, the ECCP module waits until the start of a new PWM period before generating a PWM signal.

FIGURE 24-5: EXAMPLE SIMPLIFIED BLOCK DIAGRAM OF THE ENHANCED PWM MODE

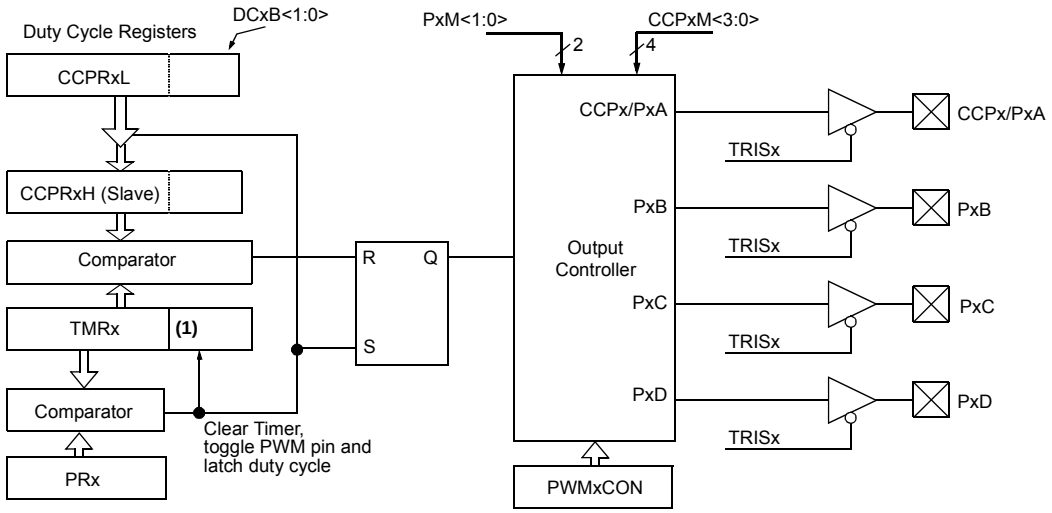

Note 1: The 8-bit timer TMRx register is concatenated with the 2-bit internal Q clock, or 2 bits of the prescaler to create the 10-bit time base.

TABLE 24-9: EXAMPLE PIN ASSIGNMENTS FOR VARIOUS PWM ENHANCED MODES

ECCP Mode	PxM<1:0>	CCPx/PxA	PxB	PxC	PxD
Single	00	Yes(1)	Yes(1)	Yes(1)	Yes(1)
Half-Bridge	10	Yes	Yes	No	No
Full-Bridge, Forward	01	Yes	Yes	Yes	Yes
Full-Bridge, Reverse	11	Yes	Yes	Yes	Yes

Note 1: PWM Steering enables outputs in Single mode.

FIGURE 24-6: EXAMPLE PWM (ENHANCED MODE) OUTPUT RELATIONSHIPS (ACTIVE-HIGH STATE)

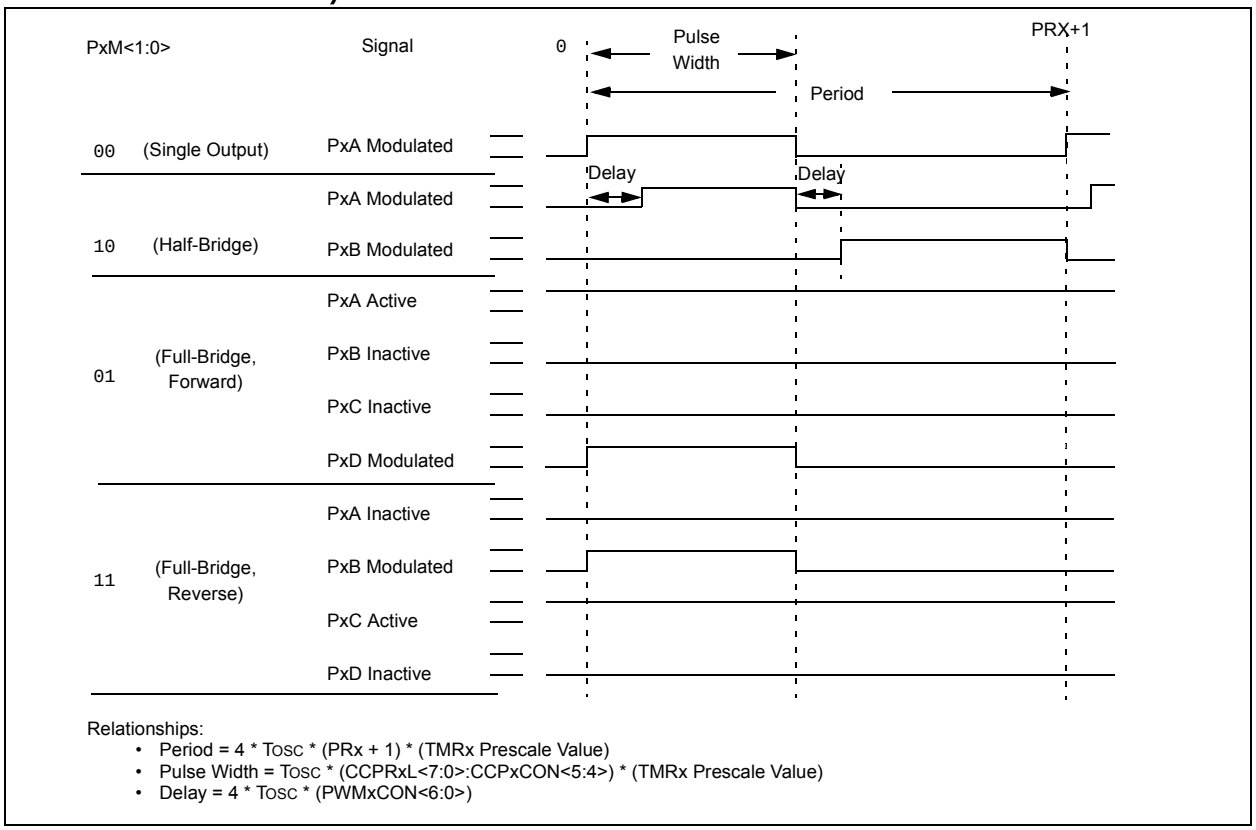

Relationships:

- Period = 4 * TOSC * (PRx + 1) * (TMRx Prescale Value)
- Pulse Width = TOSC * (CCPRxL<7:0>:CCPxCON<5:4>) * (TMRx Prescale Value)
- Delay = 4 * TOSC * (PWMxCON<6:0>)

© 2010-2015 Microchip Technology Inc.

FIGURE 24-7: EXAMPLE ENHANCED PWM OUTPUT RELATIONSHIPS (ACTIVE-LOW STATE)

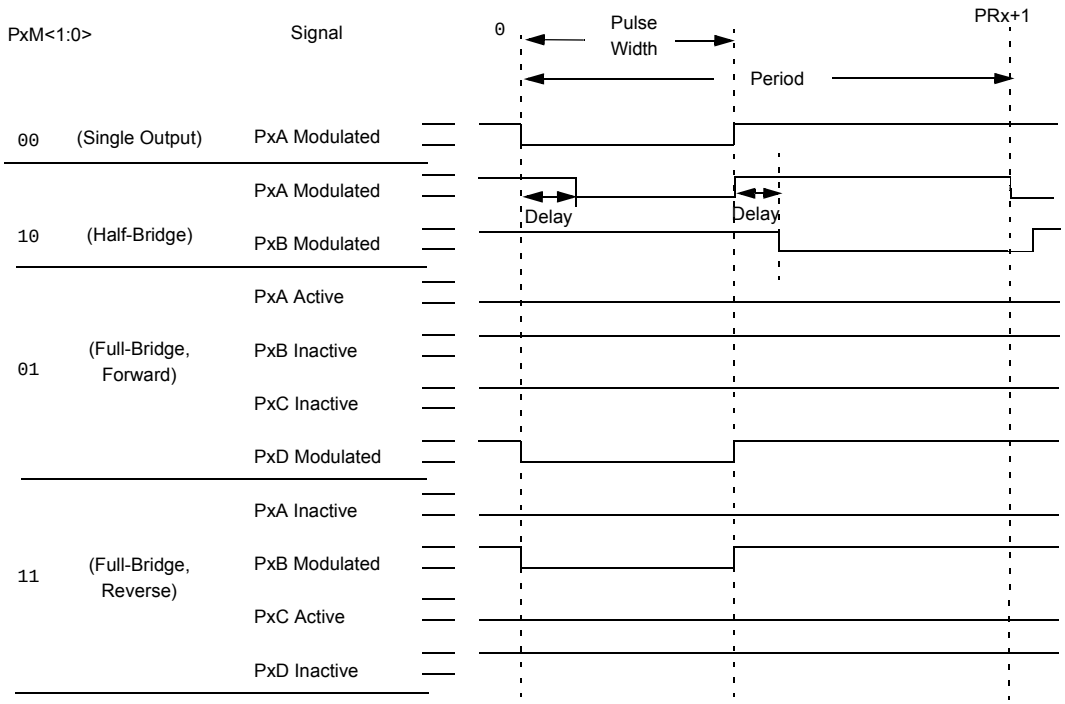

Relationships:

- Period = 4 * Tosc * (PRx + 1) * (TMRx Prescale Value)
- Pulse Width = Tosc * (CCPRxL<7:0>:CCPxCON<5:4>) * (TMRx Prescale Value)
- Delay = 4 * Tosc * (PWMxCON<6:0>)

24.4.1 HALF-BRIDGE MODE

In Half-Bridge mode, two pins are used as outputs to drive push-pull loads. The PWM output signal is output on the CCPx/PxA pin, while the complementary PWM output signal is output on the PxB pin (see Figure 24-9). This mode can be used for Half-Bridge applications, as shown in Figure 24-9, or for Full-Bridge applications, where four power switches are being modulated with two PWM signals.

In Half-Bridge mode, the programmable dead-band delay can be used to prevent shoot-through current in Half-Bridge power devices. The value of the PDC<6:0> bits of the PWMxCON register sets the number of instruction cycles before the output is driven active. If the value is greater than the duty cycle, the corresponding output remains inactive during the entire cycle. See **Section 24.4.5 "Programmable Dead-Band Delay Mode"** for more details of the dead-band delay operations.

Since the PxA and PxB outputs are multiplexed with the PORT data latches, the associated TRIS bits must be cleared to configure PxA and PxB as outputs.

FIGURE 24-8: EXAMPLE OF HALF-BRIDGE PWM OUTPUT

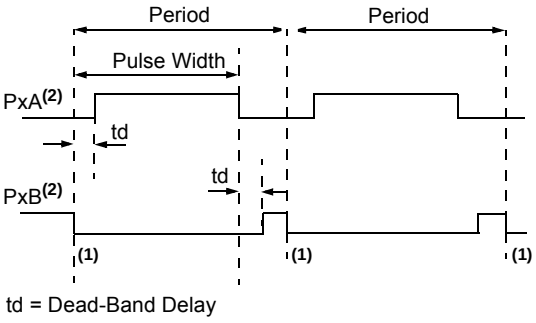

td = Dead-Band Delay

Note 1: At this time, the TMRx register is equal to the PRx register.

2: Output signals are shown as active-high.

FIGURE 24-9: EXAMPLE OF HALF-BRIDGE APPLICATIONS

Standard Half-Bridge Circuit ("Push-Pull")

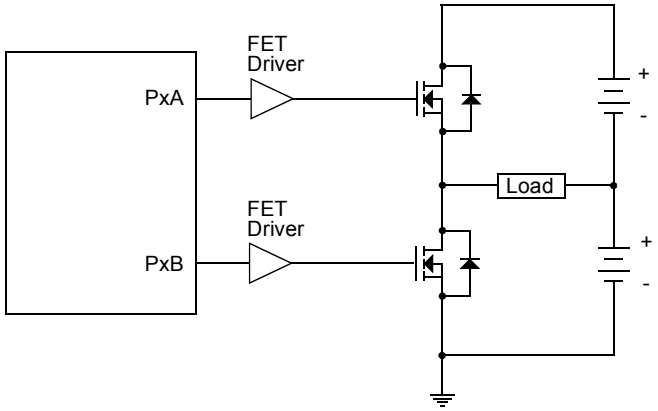

Half-Bridge Output Driving a Full-Bridge Circuit

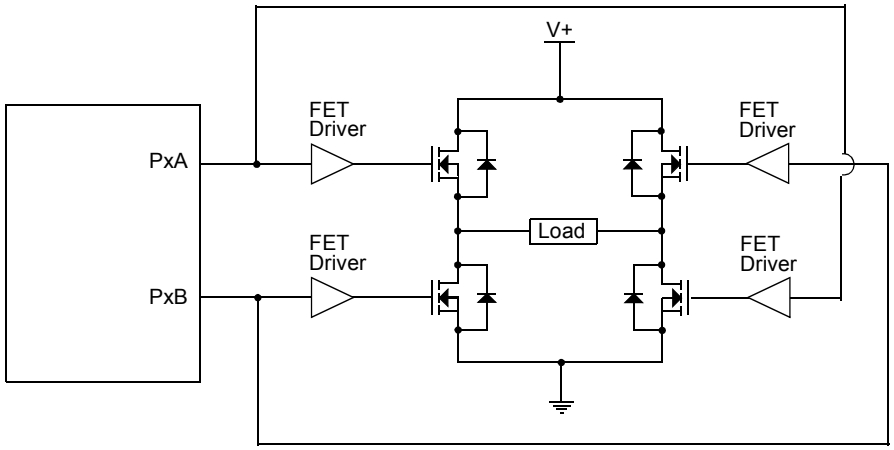

© 2010-2015 Microchip Technology Inc.

24.4.2 FULL-BRIDGE MODE

In Full-Bridge mode, all four pins are used as outputs. An example of Full-Bridge application is shown in Figure 24-10.

In the Forward mode, pin CCPx/PxA is driven to its active state, pin PxD is modulated, while PxB and PxC will be driven to their inactive state as shown in Figure 24-11.

In the Reverse mode, PxC is driven to its active state, pin PxB is modulated, while PxA and PxD will be driven to their inactive state as shown Figure 24-11.

PxA, PxB, PxC and PxD outputs are multiplexed with the PORT data latches. The associated TRIS bits must be cleared to configure the PxA, PxB, PxC and PxD pins as outputs.

FIGURE 24-10: EXAMPLE OF FULL-BRIDGE APPLICATION

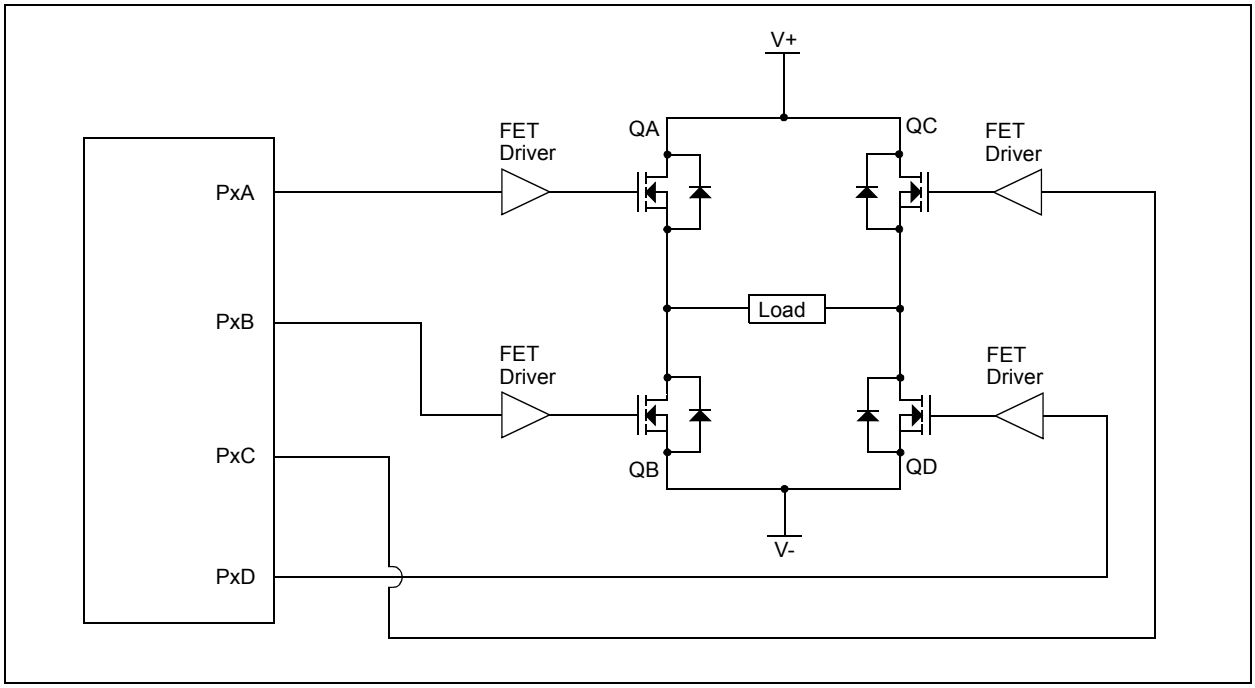

FIGURE 24-11: EXAMPLE OF FULL-BRIDGE PWM OUTPUT

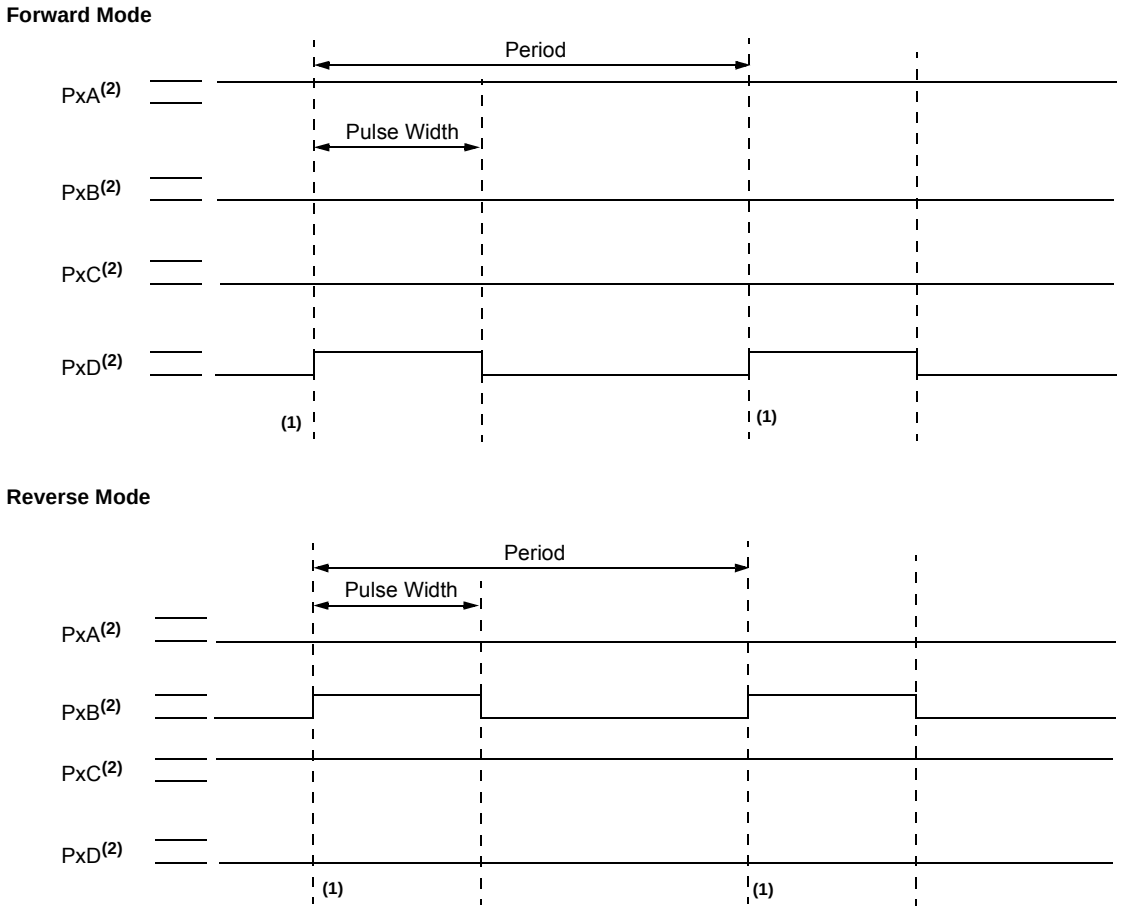

Note 1: At this time, the TMRx register is equal to the PRx register.

2: Output signal is shown as active-high.

© 2010-2015 Microchip Technology Inc.

24.4.2.1 Direction Change in Full-Bridge Mode

In the Full-Bridge mode, the PxM1 bit in the CCPxCON register allows users to control the forward/reverse direction. When the application firmware changes this direction control bit, the module will change to the new direction on the next PWM cycle.

A direction change is initiated in software by changing the PxM1 bit of the CCPxCON register. The following sequence occurs four Timer cycles prior to the end of the current PWM period:

- The modulated outputs (PxB and PxD) are placed in their inactive state.
- The associated unmodulated outputs (PxA and PxC) are switched to drive in the opposite direction.
- PWM modulation resumes at the beginning of the next period.

See Figure 24-12 for an illustration of this sequence.

The Full-Bridge mode does not provide dead-band delay. As one output is modulated at a time, dead-band delay is generally not required. There is a situation where dead-band delay is required. This situation occurs when both of the following conditions are true:

1. The direction of the PWM output changes when the duty cycle of the output is at or near 100%.
2. The turn off time of the power switch, including the power device and driver circuit, is greater than the turn on time.

Figure 24-13 shows an example of the PWM direction changing from forward to reverse, at a near 100% duty cycle. In this example, at time t1, the output PxA and PxD become inactive, while output PxC becomes active. Since the turn off time of the power devices is longer than the turn on time, a shoot-through current will flow through power devices QC and QD (see Figure 24-10) for the duration of 't'. The same phenomenon will occur to power devices QA and QB for PWM direction change from reverse to forward.

If changing PWM direction at high duty cycle is required for an application, two possible solutions for eliminating the shoot-through current are:

1. Reduce PWM duty cycle for one PWM period before changing directions.
2. Use switch drivers that can drive the switches off faster than they can drive them on.

Other options to prevent shoot-through current may exist.

FIGURE 24-12: EXAMPLE OF PWM DIRECTION CHANGE

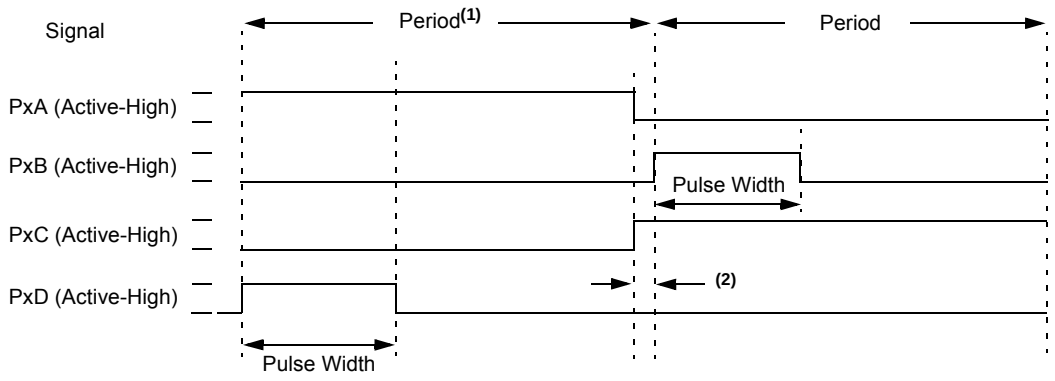

Note 1: The direction bit PxM1 of the CCPxCON register is written any time during the PWM cycle.

2: When changing directions, the PxA and PxC signals switch before the end of the current PWM cycle. The modulated PxB and PxD signals are inactive at this time. The length of this time is four Timer counts.

FIGURE 24-13: EXAMPLE OF PWM DIRECTION CHANGE AT NEAR 100% DUTY CYCLE

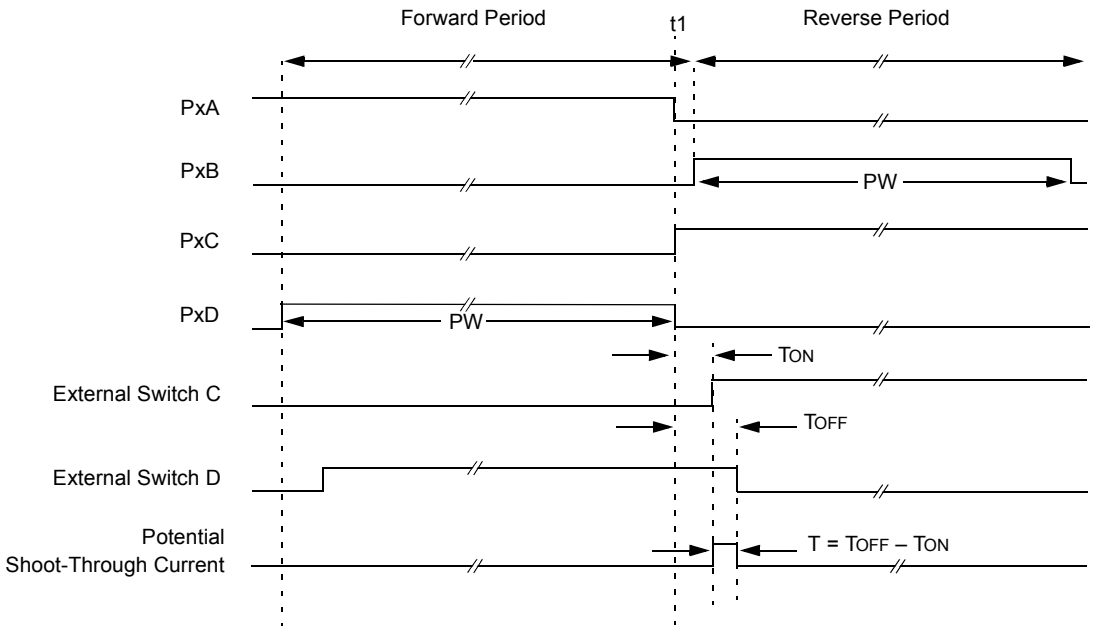

Note 1: All signals are shown as active-high.

2: TON is the turn-on delay of power switch QC and its driver.

3: TOFF is the turn-off delay of power switch QD and its driver.

© 2010-2015 Microchip Technology Inc.

24.4.3 ENHANCED PWM AUTO-SHUTDOWN MODE

The PWM mode supports an Auto-Shutdown mode that will disable the PWM outputs when an external shutdown event occurs. Auto-Shutdown mode places the PWM output pins into a predetermined state. This mode is used to help prevent the PWM from damaging the application.

The auto-shutdown sources are selected using the CCPxAS<2:0> bits of the CCPxAS register. A shutdown event may be generated by:

- A logic '0' on the FLT0 pin
- A logic '1' on a Comparator (Cx) output

A shutdown condition is indicated by the CCPxASE (Auto-Shutdown Event Status) bit of the CCPxAS register. If the bit is a '0', the PWM pins are operating normally. If the bit is a '1', the PWM outputs are in the shutdown state.

When a shutdown event occurs, two things happen:

The CCPxASE bit is set to '1'. The CCPxASE will remain set until cleared in firmware or an auto-restart occurs (see **Section 24.4.4 "Auto-restart Mode"**).

The enabled PWM pins are asynchronously placed in their shutdown states. The PWM output pins are grouped into pairs [PxA/PxC] and [PxB/PxD]. The state of each pin pair is determined by the PSSxAC and PSSxBD bits of the CCPxAS register. Each pin pair may be placed into one of three states:

- Drive logic '1'
- Drive logic '0'
- Tri-state (high-impedance)

Note 1: The auto-shutdown condition is a level-based signal, not an edge-based signal. As long as the level is present, the auto-shutdown will persist.

2: Writing to the CCPxASE bit is disabled while an auto-shutdown condition persists.

3: Once the auto-shutdown condition has been removed and the PWM restarted (either through firmware or auto-restart) the PWM signal will always restart at the beginning of the next PWM period.

4: Prior to an auto-shutdown event caused by a comparator output or FLT0 pin event, a software shutdown can be triggered in firmware by setting the CCPxASE bit of the CCPxAS register to '1'. The Auto-Restart feature tracks the active status of a shutdown caused by a comparator output or FLT0 pin event only. If it is enabled at this time, it will immediately clear this bit and restart the ECCP module at the beginning of the next PWM period.

FIGURE 24-14: PWM AUTO-SHUTDOWN WITH FIRMWARE RESTART (PXRSEN = 0)

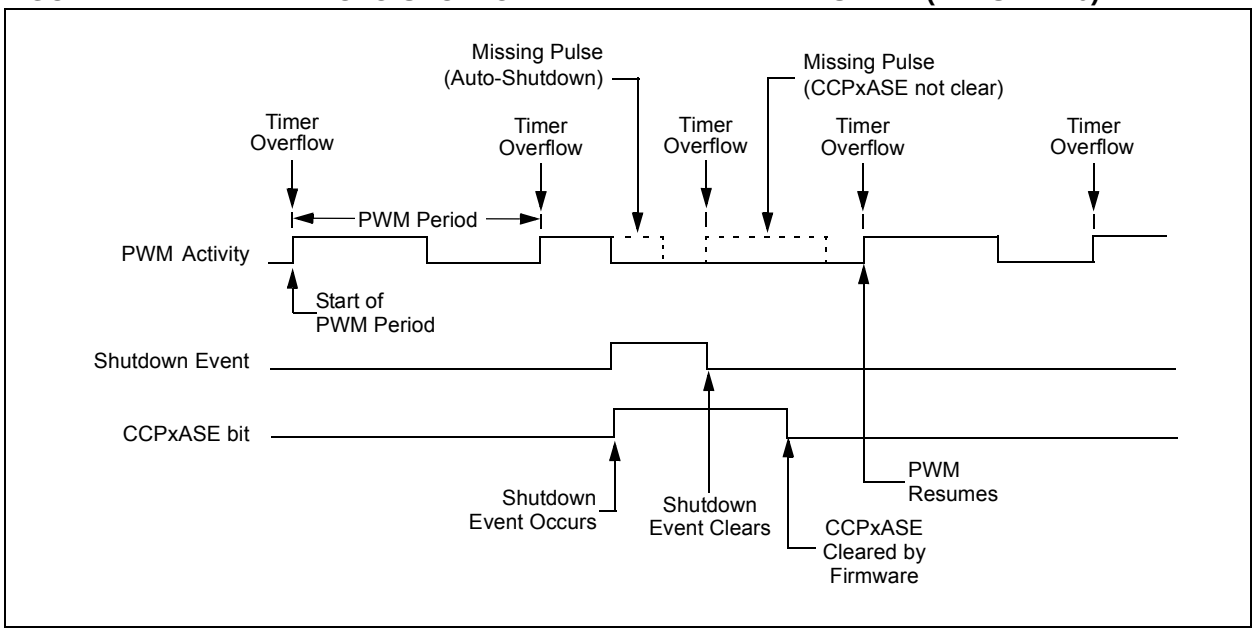

24.4.4 AUTO-RESTART MODE

The Enhanced PWM can be configured to automatically restart the PWM signal once the auto-shutdown condition has been removed. Auto-restart is enabled by setting the PxRSEN bit in the PWMxCON register.

If auto-restart is enabled, the CCPxASE bit will remain set as long as the auto-shutdown condition is active. When the auto-shutdown condition is removed, the CCPxASE bit will be cleared via hardware and normal operation will resume.

FIGURE 24-15: PWM AUTO-SHUTDOWN WITH AUTO-RESTART (PXRSEN = 1)

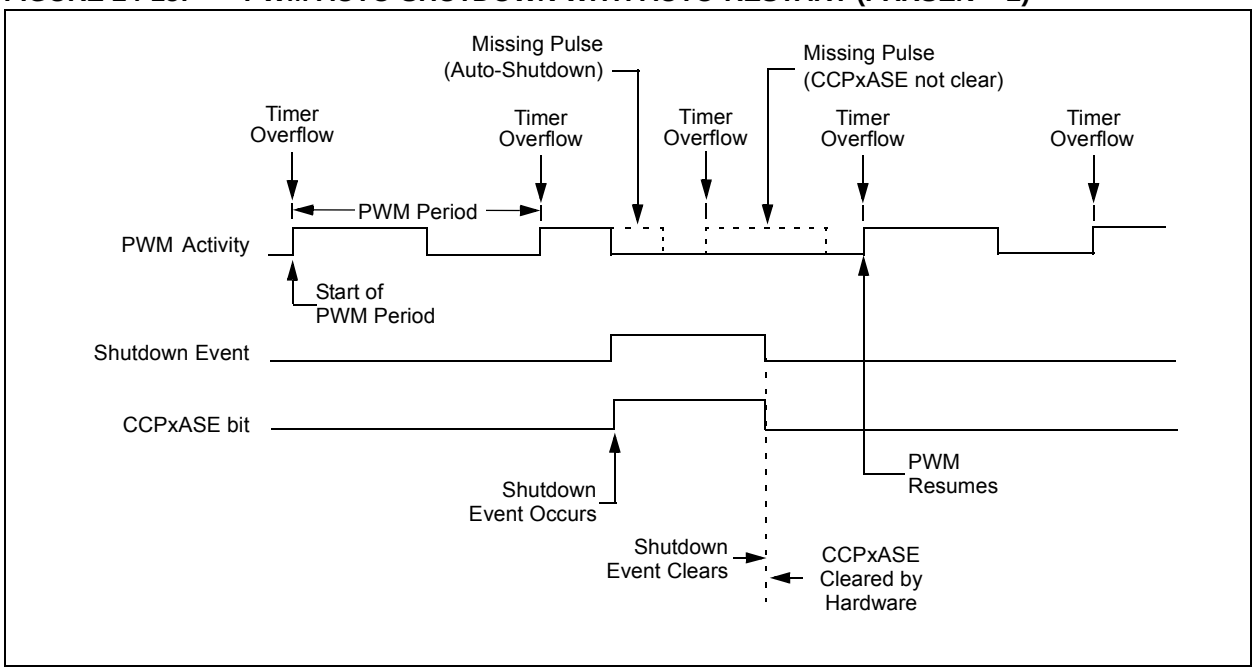

© 2010-2015 Microchip Technology Inc.

24.4.5 PROGRAMMABLE DEAD-BAND DELAY MODE

In Half-Bridge applications where all power switches are modulated at the PWM frequency, the power switches normally require more time to turn off than to turn on. If both the upper and lower power switches are switched at the same time (one turned on, and the other turned off), both switches may be on for a short period of time until one switch completely turns off. During this brief interval, a very high current (*shoot-through current*) will flow through both power switches, shorting the bridge supply. To avoid this potentially destructive shoot-through current from flowing during switching, turning on either of the power switches is normally delayed to allow the other switch to completely turn off.

In Half-Bridge mode, a digitally programmable dead-band delay is available to avoid shoot-through current from destroying the bridge power switches. The delay occurs at the signal transition from the non-active state to the active state. See Figure 24-16 for illustration. The lower seven bits of the associated PWMxCON register (Register 24-4) sets the delay period in terms of microcontroller instruction cycles (T_{CY} or 4 T_{OSC}).

FIGURE 24-16: EXAMPLE OF HALF-BRIDGE PWM OUTPUT

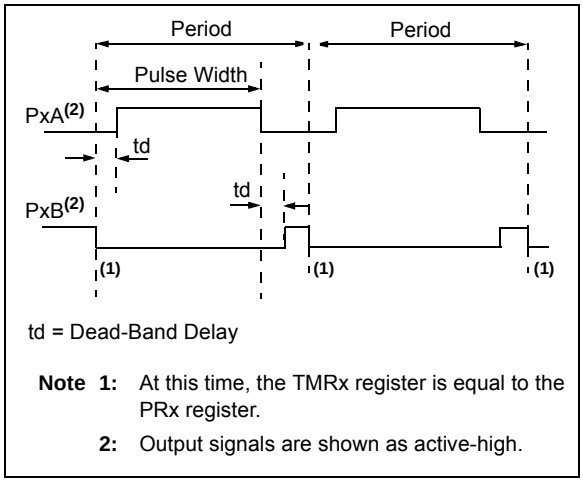

Note 1: At this time, the TMRx register is equal to the PRx register.

2: Output signals are shown as active-high.

FIGURE 24-17: EXAMPLE OF HALF-BRIDGE APPLICATIONS

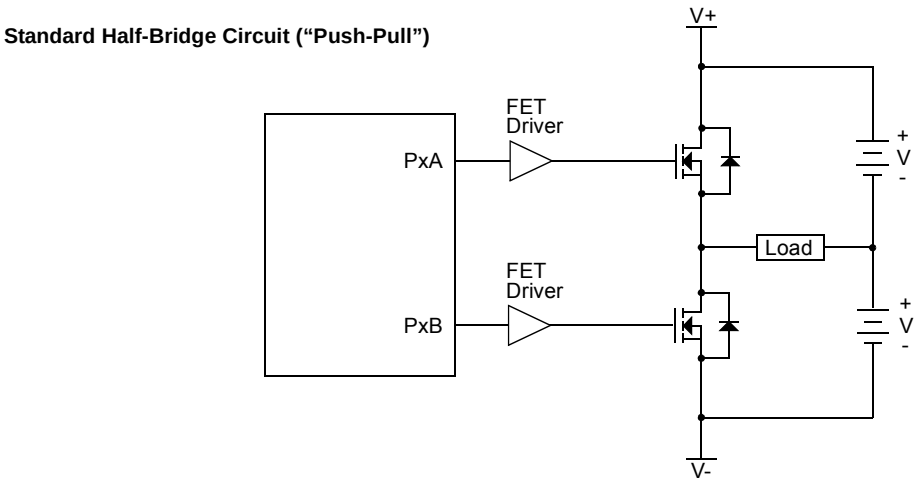

24.4.6 PWM STEERING MODE

In Single Output mode, PWM steering allows any of the PWM pins to be the modulated signal. Additionally, the same PWM signal can be simultaneously available on multiple pins.

Once the Single Output mode is selected (CCPxM<3:2> = 11 and PxM<1:0> = 00 of the CCPxCON register), the user firmware can bring out the same PWM signal to one, two, three or four output pins by setting the appropriate STRx<D:A> bits of the PSTRxCON register, as shown in Table 24-9.

Note:	The associated TRIS bits must be set to output ('0') to enable the pin output driver in order to see the PWM signal on the pin.

While the PWM Steering mode is active, CCPxM<1:0> bits of the CCPxCON register select the PWM output polarity for the Px<D:A> pins.

The PWM auto-shutdown operation also applies to PWM Steering mode as described in **Section 24.4.3 "Enhanced PWM Auto-shutdown mode"**. An auto-shutdown event will only affect pins that have PWM outputs enabled.

FIGURE 24-18: SIMPLIFIED STEERING BLOCK DIAGRAM

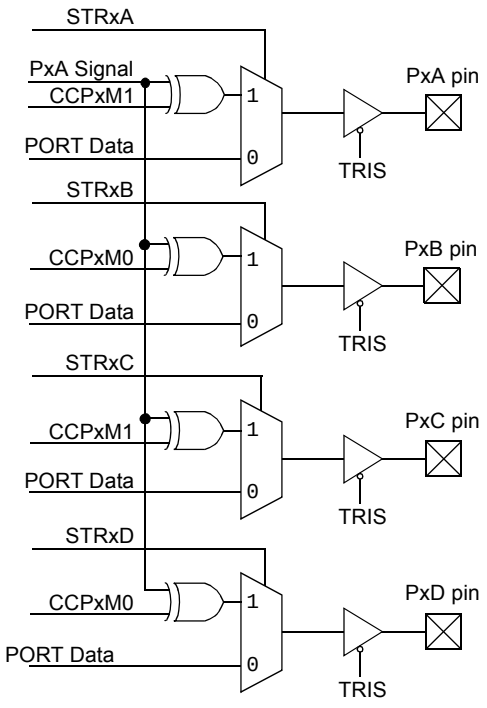

Note 1: Port outputs are configured as shown when the CCPxCON register bits PxM<1:0> = 00 and CCPxM<3:2> = 11.

2: Single PWM output requires setting at least one of the STRx bits.

© 2010-2015 Microchip Technology Inc.

24.4.6.1 Steering Synchronization

The STRxSYNC bit of the PSTRxCON register gives the user two selections of when the steering event will happen. When the STRxSYNC bit is '0', the steering event will happen at the end of the instruction that writes to the PSTRxCON register. In this case, the output signal at the Px<D:A> pins may be an incomplete PWM waveform. This operation is useful when the user firmware needs to immediately remove a PWM signal from the pin.

When the STRxSYNC bit is '1', the effective steering update will happen at the beginning of the next PWM period. In this case, steering on/off the PWM output will always produce a complete PWM waveform.

Figures 24-19 and 24-20 illustrate the timing diagrams of the PWM steering depending on the STRxSYNC setting.

24.4.7 START-UP CONSIDERATIONS

When any PWM mode is used, the application hardware must use the proper external pull-up and/or pull-down resistors on the PWM output pins.

The CCPxM<1:0> bits of the CCPxCON register allow the user to choose whether the PWM output signals are active-high or active-low for each pair of PWM output pins (PxA/PxC and PxB/PxD). The PWM output polarities must be selected before the PWM pin output drivers are enabled. Changing the polarity configuration while the PWM pin output drivers are enable is not recommended since it may result in damage to the application circuits.

The PxA, PxB, PxC and PxD output latches may not be in the proper states when the PWM module is initialized. Enabling the PWM pin output drivers at the same time as the Enhanced PWM modes may cause damage to the application circuit. The Enhanced PWM modes must be enabled in the proper Output mode and complete a full PWM cycle before enabling the PWM pin output drivers. The completion of a full PWM cycle is indicated by the TMRxIF bit of the PIRx register being set as the second PWM period begins.

Note:	When the microcontroller is released from Reset, all of the I/O pins are in the high-impedance state. The external circuits must keep the power switch devices in the Off state until the microcontroller drives the I/O pins with the proper signal levels or activates the PWM output(s).

24.4.8 ALTERNATE PIN LOCATIONS

This module incorporates I/O pins that can be moved to other locations with the use of the alternate pin function registers, APFCON0 and APFCON1. To determine which pins can be moved and what their default locations are upon a Reset, see **Section 12.1 "Alternate Pin Function"** for more information.

FIGURE 24-19: EXAMPLE OF STEERING EVENT AT END OF INSTRUCTION (STRxSYNC = 0)

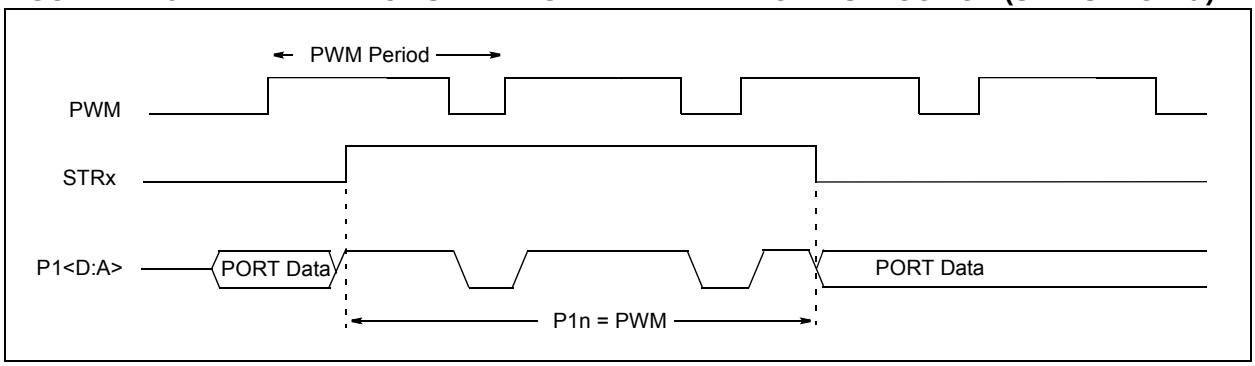

FIGURE 24-20: EXAMPLE OF STEERING EVENT AT BEGINNING OF INSTRUCTION (STRxSYNC = 1)

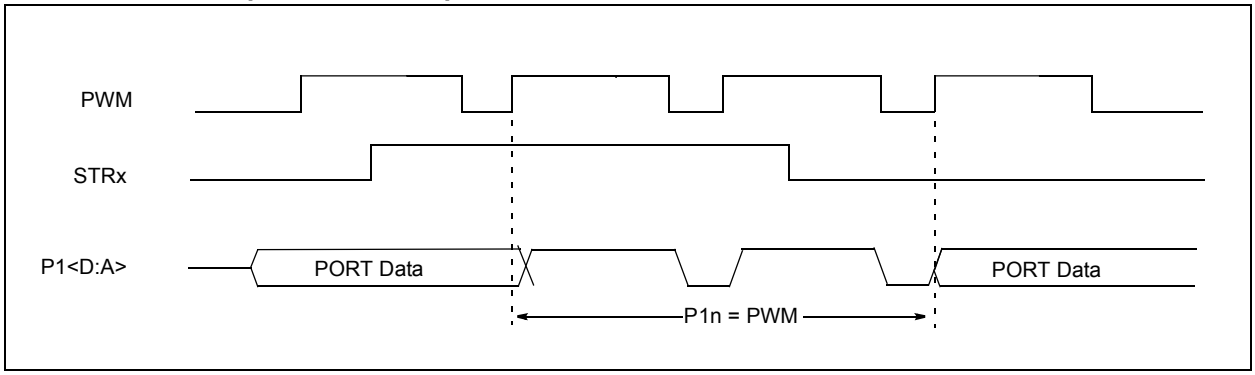

TABLE 24-10: SUMMARY OF REGISTERS ASSOCIATED WITH ENHANCED PWM

Name	Bit 7	Bit 6	Bit 5	Bit 4	Bit 3	Bit 2	Bit 1	Bit 0	Register on Page
APFCON1	—	—	—	—	P1DSEL	P1CSEL	P2BSEL	CCP2SEL	118
CCPxCON	PxM<1:0>(1)		DCxB<1:0>		CCPxM<3:0>				225
CCPxAS	CCPxASE	CCPxAS<2:0>			PSSxAC<1:0>		PSSxBD<1:0>		227
CCPTMRS0	C4TSEL<1:0>		C3TSEL<1:0>		C2TSEL<1:0>		C1TSEL<1:0>		226
INLVLA	—	—	INLVLA5	INLVLA4	INLVLA3	INLVLA2	INLVLA1	INLVLA0	123
INLVLC	INLVLC7(1)	INLVLC6(1)	INLVLC5	INLVLC4	INLVLC3	INLVLC2	INLVLC1	INLVLC0	134
INTCON	GIE	PEIE	TMR0IE	INTE	IOCIE	TMR0IF	INTF	IOCIF	89
PIE1	TMR1GIE	ADIE	RCIE	TXIE	SSP1IE	CCP1IE	TMR2IE	TMR1IE	90
PIE2	OSFIE	C2IE	C1IE	EEIE	BCLIE	—	—	CCP2IE	91
PIE3	—	—	CCP4IE	CCP3IE	TMR6IE	—	TMR4IE	—	92
PIR1	TMR1GIF	ADIF	RCIF	TXIF	SSP1IF	CCP1IF	TMR2IF	TMR1IF	93
PIR2	OSFIF	C2IF	C1IF	EEIF	BCLIF	—	—	CCP2IF	94
PIR3	—	—	CCP4IF	CCP3IF	TMR6IF	—	TMR4IF	—	95
PRx	Timer2/4/6 Period Register								189*
PSTRxCON	—	—	—	STRxSYNC	STRxD	STRxC	STRxB	STRxA	229
PWMxCON	PxRSEN	PxDC<6:0>							228
TxCON	—	TxOUTPS<3:0>				TMRxON	TxCKPS<:0>1		191
TRISA	—	—	TRISA5	TRISA4	TRISA3	TRISA2	TRISA1	TRISA0	121
TRISC	TRISC7(2)	TRISC6(2)	TRISC5	TRISC4	TRISC3	TRISC2	TRISC1	TRISC0	132

Legend: — = unimplemented location, read as '0'. Shaded cells are not used by the PWM.

* Page provides register information.

Note 1: Applies to ECCP modules only.

2: PIC16(L)F1828 only.

© 2010-2015 Microchip Technology Inc.

REGISTER 24-1: CCPxCON: CCPx CONTROL REGISTER

R/W-00	R/W-0/0	R/W-0/0	R/W-0/0	R/W-0/0	R/W-0/0	R/W-0/0	R/W-0/0
PxM<1:0>(1)		DCxB<1:0>		CCPxM<3:0>			
bit 7							bit 0

Legend:		
R = Readable bit	W = Writable bit	U = Unimplemented bit, read as '0'
u = Bit is unchanged	x = Bit is unknown	-n/n = Value at POR and BOR/Value at all other Reset
'1' = Bit is set	'0' = Bit is cleared	

bit 7-6 **PxM<1:0>:** Enhanced PWM Output Configuration bits(1)

Capture mode:
Unused

Compare mode:
Unused

If CCPxM<3:2> = 00, 01, 10:
xx = PxA assigned as Capture/Compare input; PxB, PxC, PxD assigned as port pins

If CCPxM<3:2> = 11:
00 = Single output; PxA modulated; PxB, PxC, PxD assigned as port pins
01 = Full-Bridge output forward; PxD modulated; PxA active; PxB, PxC inactive
10 = Half-Bridge output; PxA, PxB modulated with dead-band control; PxC, PxD assigned as port pins
11 = Full-Bridge output reverse; PxB modulated; PxC active; PxA, PxD inactive

bit 5-4 **DCxB<1:0>:** PWM Duty Cycle Least Significant bits

Capture mode:
Unused

Compare mode:
Unused

PWM mode:
These bits are the two LSbs of the PWM duty cycle. The eight MSbs are found in CCPRxL.

bit 3-0 **CCPxM<3:0>:** ECCPx Mode Select bits

0000 = Capture/Compare/PWM off (resets ECCPx module)
0001 = Reserved
0010 = Compare mode: toggle output on match
0011 = Reserved

0100 = Capture mode: every falling edge
0101 = Capture mode: every rising edge
0110 = Capture mode: every 4th rising edge
0111 = Capture mode: every 16th rising edge

1000 = Compare mode: initialize ECCPx pin low; set output on compare match (set CCPxIF)
1001 = Compare mode: initialize ECCPx pin high; clear output on compare match (set CCPxIF)
1010 = Compare mode: generate software interrupt only; ECCPx pin reverts to I/O state
1011 = Compare mode: Special Event Trigger (ECCPx resets Timer, sets CCPxIF bit, starts A/D conversion if A/D module is enabled)(1)

CCP Modules only:
11xx = PWM mode

ECCP modules only:
1100 = PWM mode: PxA, PxC active-high; PxB, PxD active-high
1101 = PWM mode: PxA, PxC active-high; PxB, PxD active-low
1110 = PWM mode: PxA, PxC active-low; PxB, PxD active-high
1111 = PWM mode: PxA, PxC active-low; PxB, PxD active-low

Note 1: These bits are not implemented on CCP3 or CCP4.

REGISTER 24-2: CCPTMRS0: PWM TIMER SELECTION CONTROL REGISTER

R/W-0/0	R/W-0/0	R/W-0/0	R/W-0/0	R/W-0/0	R/W-0/0	R/W-0/0	R/W-0/0
C4TSEL<1:0>		C3TSEL<1:0>		C2TSEL<1:0>		C1TSEL<1:0>	
bit 7							bit 0

Legend:		
R = Readable bit	W = Writable bit	U = Unimplemented bit, read as ‘0’
u = Bit is unchanged	x = Bit is unknown	-n/n = Value at POR and BOR/Value at all other Resets
‘1’ = Bit is set	‘0’ = Bit is cleared	

bit 7-6 **C4TSEL<1:0>:** CCP4 Timer Selection bits
00 = CCP4 is based off Timer2 in PWM mode
01 = CCP4 is based off Timer4 in PWM mode
10 = CCP4 is based off Timer6 in PWM mode
11 = Reserved

bit 5-4 **C3TSEL<1:0>:** CCP3 Timer Selection bits
00 = CCP3 is based off Timer2 in PWM mode
01 = CCP3 is based off Timer4 in PWM mode
10 = CCP3 is based off Timer6 in PWM mode
11 = Reserved

bit 3-2 **C2TSEL<1:0>:** CCP2 Timer Selection bits
00 = CCP2 is based off Timer2 in PWM mode
01 = CCP2 is based off Timer4 in PWM mode
10 = CCP2 is based off Timer6 in PWM mode
11 = Reserved

bit 1-0 **C1TSEL<1:0>:** CCP1 Timer Selection bits
00 = CCP1 is based off Timer2 in PWM mode
01 = CCP1 is based off Timer4 in PWM mode
10 = CCP1 is based off Timer6 in PWM mode
11 = Reserved

© 2010-2015 Microchip Technology Inc.

REGISTER 24-3: CCPxAS: CCPx AUTO-SHUTDOWN CONTROL REGISTER

R/W-0/0	R/W-0/0	R/W-0/0	R/W-0/0	R/W-0/0	R/W-0/0	R/W-0/0	R/W-0/0
CCPxASE	CCPxAS<2:0>			PSSxAC<1:0>		PSSxBD<1:0>	
bit 7							bit 0

Legend:		
R = Readable bit	W = Writable bit	U = Unimplemented bit, read as '0'
u = Bit is unchanged	x = Bit is unknown	-n/n = Value at POR and BOR/Value at all other Resets
'1' = Bit is set	'0' = Bit is cleared	

bit 7 **CCPxASE:** CCPx Auto-Shutdown Event Status bit
- 1 = A shutdown event has occurred; CCPx outputs are in shutdown state
- 0 = CCPx outputs are operating

bit 6-4 **CCPxAS<2:0>:** CCPx Auto-Shutdown Source Select bits
- 000 = Auto-shutdown is disabled
- 001 = Comparator C1 output high(1)
- 010 = Comparator C2 output high(1)
- 011 = Either Comparator C1 or C2 high(1)
- 100 = VIL on FLT0 pin
- 101 = VIL on FLT0 pin or Comparator C1 high(1)
- 110 = VIL on FLT0 pin or Comparator C2 high(1)
- 111 = VIL on FLT0 pin or Comparator C1 or Comparator C2 high(1)

bit 3-2 **PSSxAC<1:0>:** Pins PxA and PxC Shutdown State Control bits
- 00 = Drive pins PxA and PxC to '0'
- 01 = Drive pins PxA and PxC to '1'
- 1x = Pins PxA and PxC tri-state

bit 1-0 **PSSxBD<1:0>:** Pins PxB and PxD Shutdown State Control bits
- 00 = Drive pins PxB and PxD to '0'
- 01 = Drive pins PxB and PxD to '1'
- 1x = Pins PxB and PxD tri-state

Note 1: If CxSYNC is enabled, the shutdown will be delayed by Timer1.

REGISTER 24-4: PWMxCON: ENHANCED PWM CONTROL REGISTER

R/W-0/0	R/W-0/0	R/W-0/0	R/W-0/0	R/W-0/0	R/W-0/0	R/W-0/0	R/W-0/0
PxRSEN	PxDC<6:0>						
bit 7							bit 0

Legend:		
R = Readable bit	W = Writable bit	U = Unimplemented bit, read as '0'
u = Bit is unchanged	x = Bit is unknown	-n/n = Value at POR and BOR/Value at all other Resets
'1' = Bit is set	'0' = Bit is cleared	

bit 7 **PxRSEN:** PWM Restart Enable bit

1 = Upon auto-shutdown, the CCPxASE bit clears automatically once the shutdown event goes away; the PWM restarts automatically

0 = Upon auto-shutdown, CCPxASE must be cleared in software to restart the PWM

bit 6-0 **PxDC<6:0>:** PWM Delay Count bits

PxDCx = Number of FOSC/4 (4 * TOSC) cycles between the scheduled time when a PWM signal **should** transition active and the **actual** time it transitions active

Note 1: Bit resets to '0' with Two-Speed Start-up and LP, XT or HS selected as the Oscillator mode or Fail-Safe mode is enabled.

© 2010-2015 Microchip Technology Inc.

REGISTER 24-5: PSTRxCON: PWM STEERING CONTROL REGISTER(1)

U-0	U-0	U-0	R/W-0/0	R/W-0/0	R/W-0/0	R/W-0/0	R/W-1/1
—	—	—	STRxSYNC	STRxD	STRxC	STRxB	STRxA
bit 7							bit 0

Legend:		
R = Readable bit	W = Writable bit	U = Unimplemented bit, read as '0'
u = Bit is unchanged	x = Bit is unknown	-n/n = Value at POR and BOR/Value at all other Resets
'1' = Bit is set	'0' = Bit is cleared	

bit 7-5 **Unimplemented:** Read as '0'

bit 4 **STRxSYNC:** Steering Sync bit
1 = Output steering update occurs on next PWM period
0 = Output steering update occurs at the beginning of the instruction cycle boundary

bit 3 **STRxD:** Steering Enable bit D
1 = PxD pin has the PWM waveform with polarity control from CCPxM<1:0>
0 = PxD pin is assigned to port pin

bit 2 **STRxC:** Steering Enable bit C
1 = PxC pin has the PWM waveform with polarity control from CCPxM<1:0>
0 = PxC pin is assigned to port pin

bit 1 **STRxB:** Steering Enable bit B
1 = PxB pin has the PWM waveform with polarity control from CCPxM<1:0>
0 = PxB pin is assigned to port pin

bit 0 **STRxA:** Steering Enable bit A
1 = PxA pin has the PWM waveform with polarity control from CCPxM<1:0>
0 = PxA pin is assigned to port pin

Note 1: The PWM Steering mode is available only when the CCPxCON register bits CCPxM<3:2> = 11 and PxM<1:0> = 00.

25.0 MASTER SYNCHRONOUS SERIAL PORT MODULE

25.1 Master SSP (MSSP1) Module Overview

The Master Synchronous Serial Port (MSSP1) module is a serial interface useful for communicating with other peripheral or microcontroller devices. These peripheral devices may be Serial EEPROMs, shift registers, display drivers, A/D converters, etc. The MSSP1 module can operate in one of two modes:

- Serial Peripheral Interface (SPI)
- Inter-Integrated Circuit (I^2C™)

The SPI interface supports the following modes and features:

- Master mode
- Slave mode
- Clock Parity
- Slave Select Synchronization (Slave mode only)
- Daisy chain connection of slave devices

Figure 25-1 is a block diagram of the SPI interface module.

FIGURE 25-1: MSSP1 BLOCK DIAGRAM (SPI MODE)

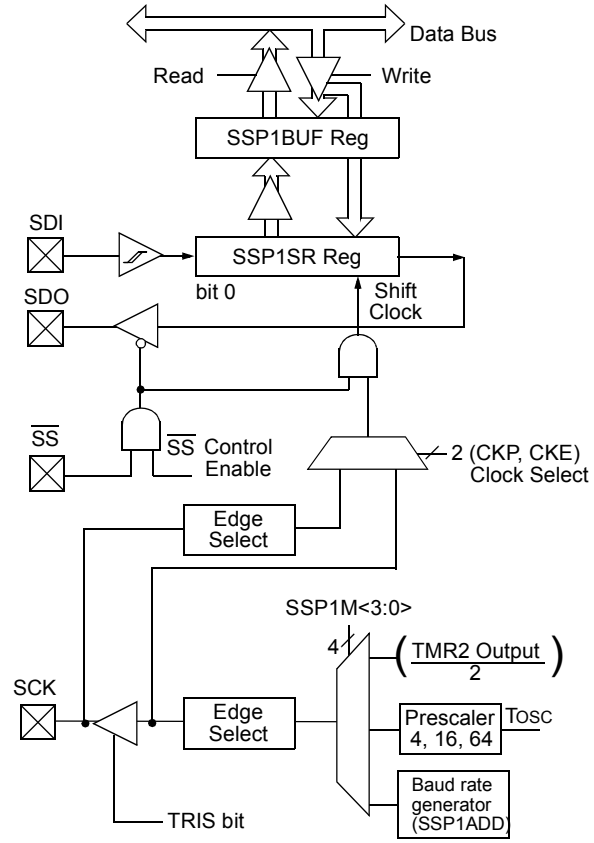

© 2010-2015 Microchip Technology Inc.

The I²C interface supports the following modes and features:

- Master mode
- Slave mode
- Byte NACKing (Slave mode)
- Limited multi-master support
- 7-bit and 10-bit addressing
- Start and Stop interrupts
- Interrupt masking
- Clock stretching
- Bus collision detection
- General call address matching
- Address masking
- Address Hold and Data Hold modes
- Selectable SDA hold times

Figure 25-2 is a block diagram of the I²C interface module in Master mode. Figure 25-3 is a diagram of the I²C interface module in Slave mode.

FIGURE 25-2: MSSP1 BLOCK DIAGRAM (I²C™ MASTER MODE)

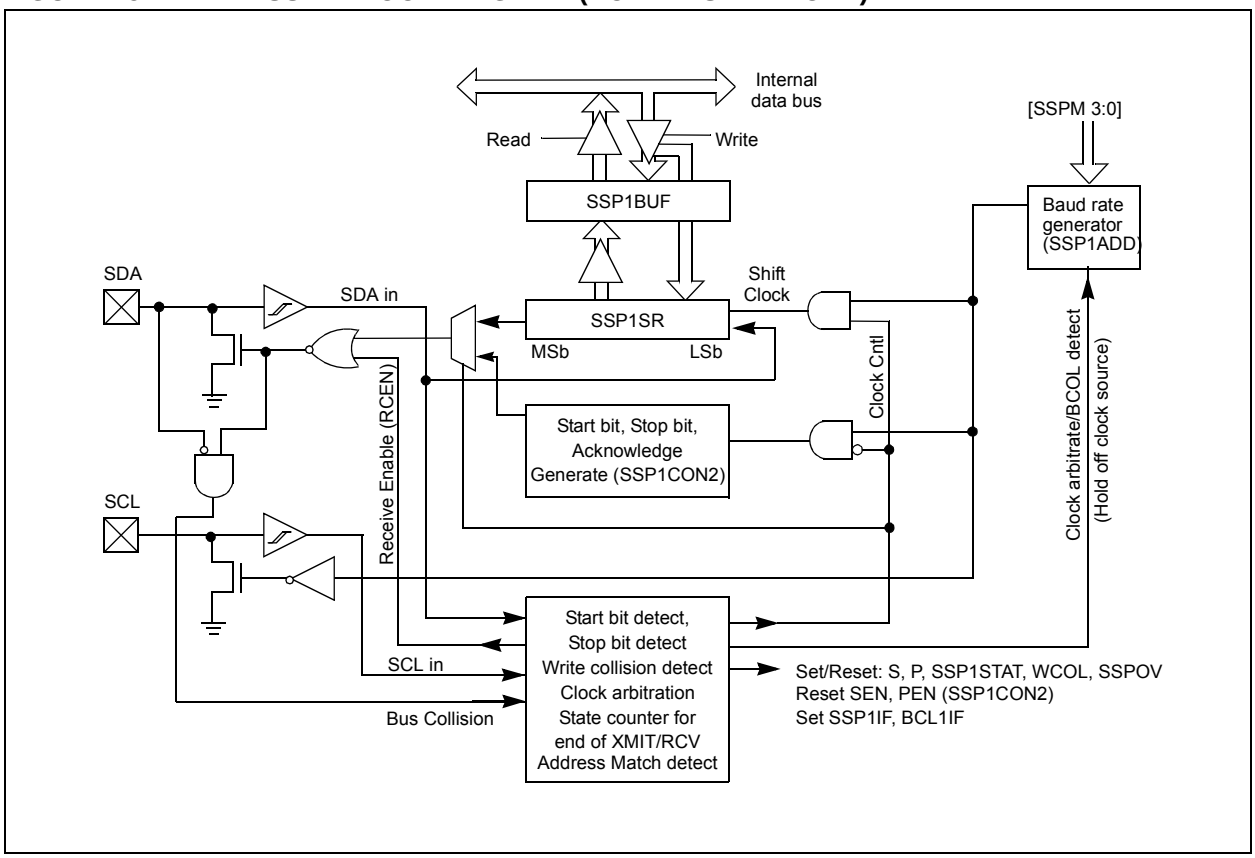

FIGURE 25-3: MSSP1 BLOCK DIAGRAM (I^2C™ SLAVE MODE)

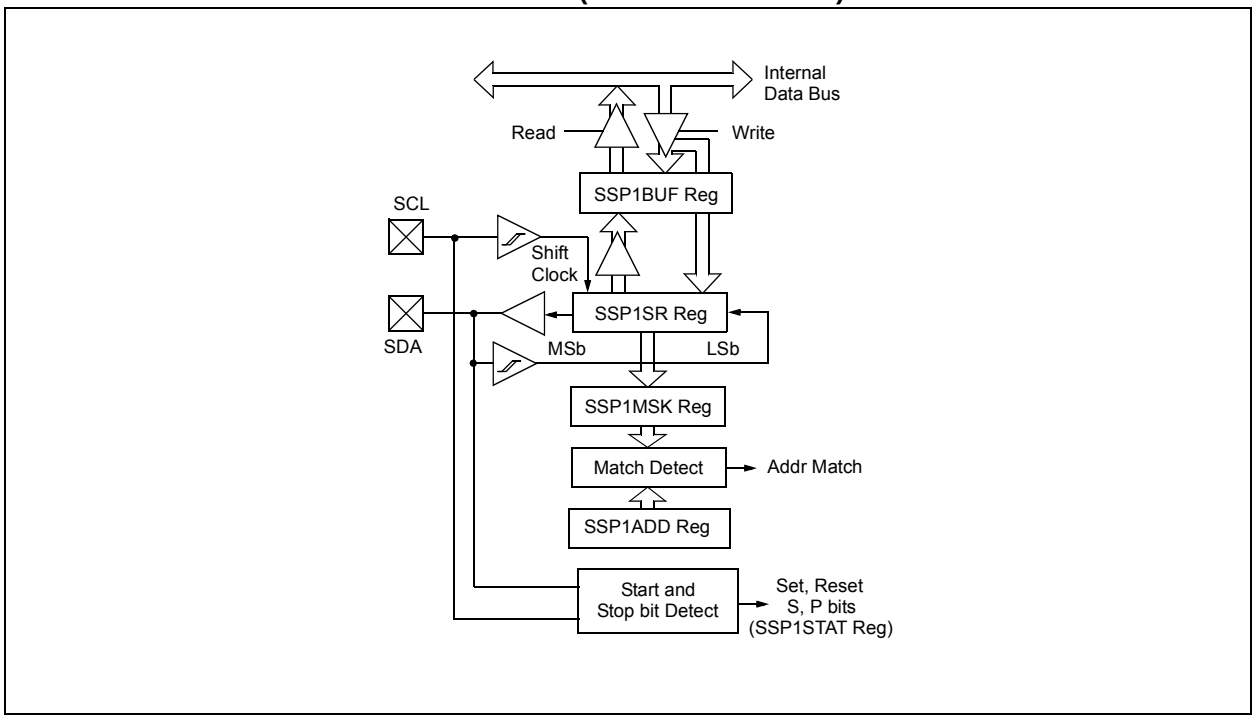

© 2010-2015 Microchip Technology Inc.

25.2 SPI Mode Overview

The Serial Peripheral Interface (SPI) bus is a synchronous serial data communication bus that operates in Full Duplex mode. Devices communicate in a master/slave environment where the master device initiates the communication. A slave device is controlled through a chip select known as Slave Select.

The SPI bus specifies four signal connections:

- Serial Clock (SCK)
- Serial Data Out (SDO)
- Serial Data In (SDI)
- Slave Select ($\overline{SS}$)

Figure 25-1 shows the block diagram of the MSSP1 module when operating in SPI Mode.

The SPI bus operates with a single master device and one or more slave devices. When multiple slave devices are used, an independent Slave Select connection is required from the master device to each slave device.

Figure 25-4 shows a typical connection between a master device and multiple slave devices.

The master selects only one slave at a time. Most slave devices have tri-state outputs so their output signal appears disconnected from the bus when they are not selected.

Transmissions involve two shift registers, eight bits in size, one in the master and one in the slave. With either the master or the slave device, data is always shifted out one bit at a time, with the Most Significant bit (MSb) shifted out first. At the same time, a new Least Significant bit (LSb) is shifted into the same register.

Figure 25-5 shows a typical connection between two processors configured as master and slave devices.

Data is shifted out of both shift registers on the programmed clock edge and latched on the opposite edge of the clock.

The master device transmits information out on its SDO output pin which is connected to, and received by, the slave's SDI input pin. The slave device transmits information out on its SDO output pin, which is connected to, and received by, the master's SDI input pin.

To begin communication, the master device first sends out the clock signal. Both the master and the slave devices should be configured for the same clock polarity.

The master device starts a transmission by sending out the MSb from its shift register. The slave device reads this bit from that same line and saves it into the LSb position of its shift register.

During each SPI clock cycle, a full duplex data transmission occurs. This means that while the master device is sending out the MSb from its shift register (on its SDO pin) and the slave device is reading this bit and saving it as the LSb of its shift register, that the slave device is also sending out the MSb from its shift register (on its SDO pin) and the master device is reading this bit and saving it as the LSb of its shift register.

After eight bits have been shifted out, the master and slave have exchanged register values.

If there is more data to exchange, the shift registers are loaded with new data and the process repeats itself.

Whether the data is meaningful or not (dummy data), depends on the application software. This leads to three scenarios for data transmission:

- Master sends useful data and slave sends dummy data.
- Master sends useful data and slave sends useful data.
- Master sends dummy data and slave sends useful data.

Transmissions may involve any number of clock cycles. When there is no more data to be transmitted, the master stops sending the clock signal and it deselects the slave.

Every slave device connected to the bus that has not been selected through its slave select line must disregard the clock and transmission signals and must not transmit out any data of its own.

© 2010-2015 Microchip Technology Inc.

FIGURE 25-4: SPI MASTER AND MULTIPLE SLAVE CONNECTION

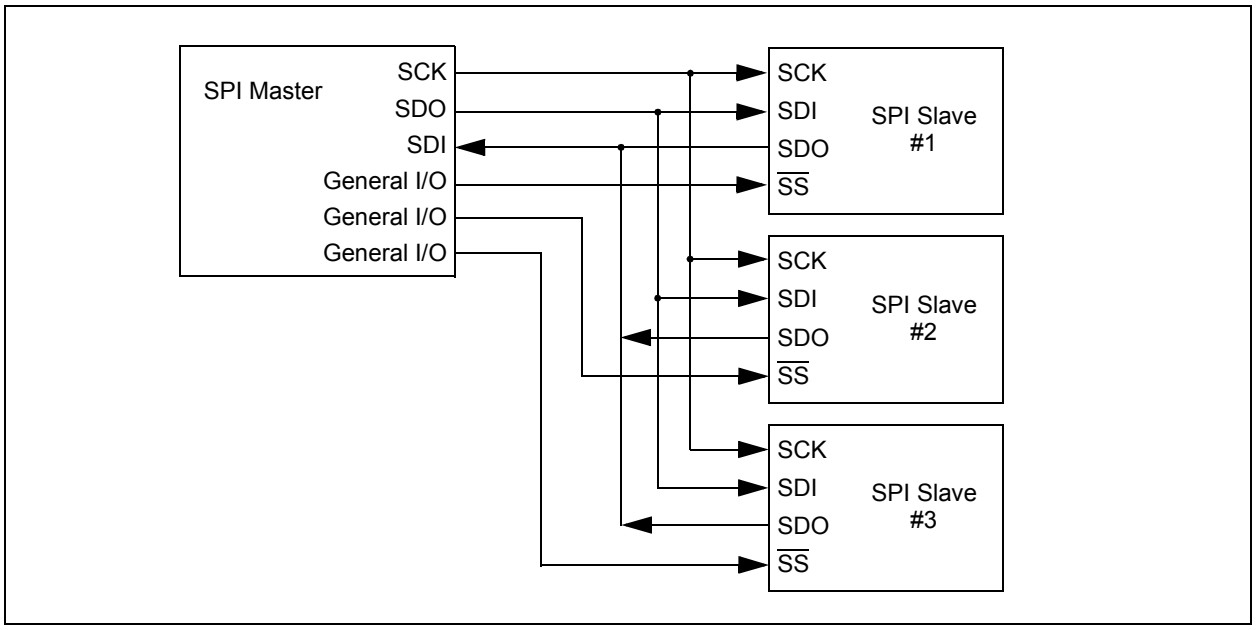

25.2.1 SPI MODE REGISTERS

The MSSP1 module has five registers for SPI mode operation. These are:

- MSSP1 STATUS Register (SSP1STAT)
- MSSP1 Control Register 1 (SSP1CON1)
- MSSP1 Control Register 3 (SSP1CON3)
- MSSP1 Data Buffer Register (SSP1BUF)
- MSSP1 Address Register (SSP1ADD)
- MSSP1 Shift Register (SSP1SR) (Not directly accessible)

SSP1CON1 and SSP1STAT are the control and STATUS registers in SPI mode operation. The SSP1CON1 register is readable and writable. The lower six bits of the SSP1STAT are read-only. The upper two bits of the SSP1STAT are read/write.

In SPI master mode, SSP1ADD can be loaded with a value used in the Baud Rate Generator. More information on the Baud Rate Generator is available in **Section 25.7 "Baud Rate Generator"**.

SSP1SR is the shift register used for shifting data in and out. SSP1BUF provides indirect access to the SSP1SR register. SSP1BUF is the buffer register to which data bytes are written, and from which data bytes are read.

In receive operations, SSP1SR and SSP1BUF together create a buffered receiver. When SSP1SR receives a complete byte, it is transferred to SSP1BUF and the SSP1IF interrupt is set.

During transmission, the SSP1BUF is not buffered. A write to SSP1BUF will write to both SSP1BUF and SSP1SR.

© 2010-2015 Microchip Technology Inc.

25.2.2 SPI MODE OPERATION

When initializing the SPI, several options need to be specified. This is done by programming the appropriate control bits (SSP1CON1<5:0> and SSP1STAT<7:6>). These control bits allow the following to be specified:

- Master mode (SCK1 is the clock output)
- Slave mode (SCK1 is the clock input)
- Clock Polarity (Idle state of SCK1)
- Data Input Sample Phase (middle or end of data output time)
- Clock Edge (output data on rising/falling edge of SCK1)
- Clock Rate (Master mode only)
- Slave Select mode (Slave mode only)

To enable the serial port, SSP1 Enable bit, SSP1EN of the SSP1CON1 register, must be set. To reset or reconfigure SPI mode, clear the SSP1EN bit, re-initialize the SSP1CONx registers and then set the SSP1EN bit. This configures the SDI, SDO, SCK and $\overline{SS}$ pins as serial port pins. For the pins to behave as the serial port function, some must have their data direction bits (in the TRIS register) appropriately programmed as follows:

- SDI must have corresponding TRIS bit set
- SDO must have corresponding TRIS bit cleared
- SCK (Master mode) must have corresponding TRIS bit cleared
- SCK (Slave mode) must have corresponding TRIS bit set
- $\overline{SS}$ must have corresponding TRIS bit set

Any serial port function that is not desired may be overridden by programming the corresponding data direction (TRIS) register to the opposite value.

The MSSP1 consists of a transmit/receive shift register (SSP1SR) and a buffer register (SSP1BUF). The SSP1SR shifts the data in and out of the device, MSb first. The SSP1BUF holds the data that was written to the SSP1SR until the received data is ready. Once the 8 bits of data have been received, that byte is moved to the SSP1BUF register. Then, the Buffer Full Detect bit, BF of the SSP1STAT register, and the interrupt flag bit, SSP1IF, are set. This double-buffering of the received data (SSP1BUF) allows the next byte to start reception before reading the data that was just received. Any write to the SSP1BUF register during transmission/reception of data will be ignored and the write collision detect bit WCOL of the SSP1CON1 register, will be set. User software must clear the WCOL bit to allow the following write(s) to the SSP1BUF register to complete successfully.

When the application software is expecting to receive valid data, the SSP1BUF should be read before the next byte of data to transfer is written to the SSP1BUF. The Buffer Full bit, BF of the SSP1STAT register, indicates when SSP1BUF has been loaded with the received data (transmission is complete). When the SSP1BUF is read, the BF bit is cleared. This data may be irrelevant if the SPI is only a transmitter. Generally, the MSSP1 interrupt is used to determine when the transmission/reception has completed. If the interrupt method is not going to be used, then software polling can be done to ensure that a write collision does not occur.

The SSP1SR is not directly readable or writable and can only be accessed by addressing the SSP1BUF register. Additionally, the SSP1STAT register indicates the various Status conditions.

FIGURE 25-5: SPI MASTER/SLAVE CONNECTION

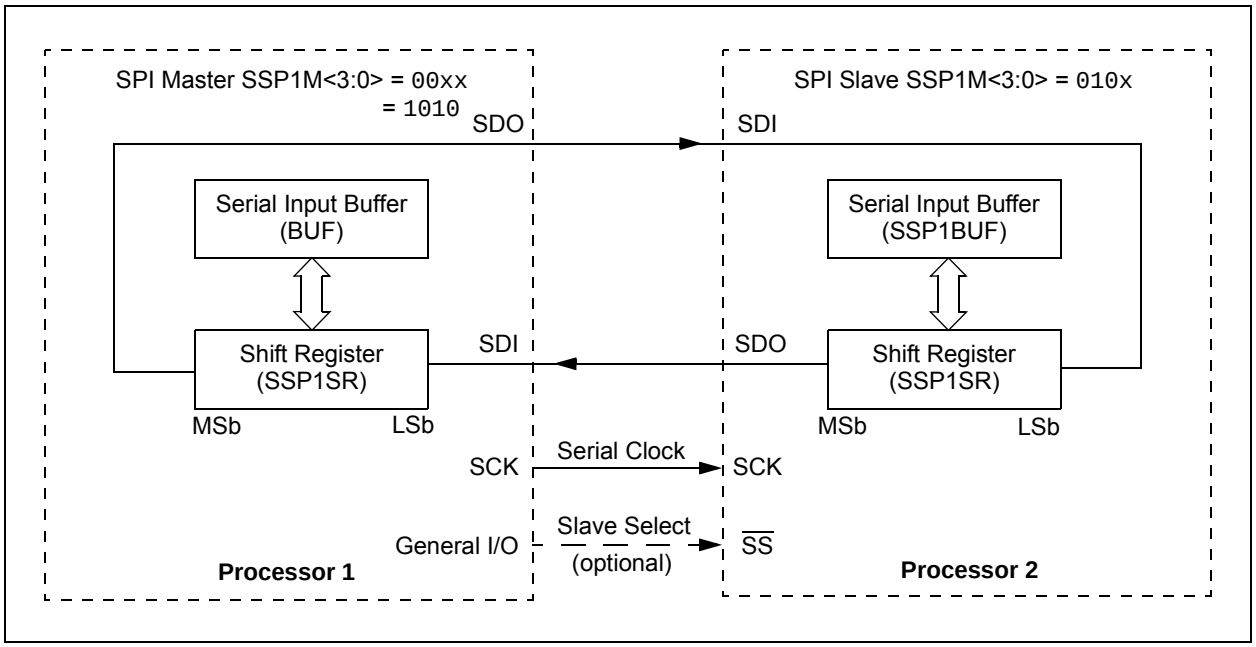

© 2010-2015 Microchip Technology Inc.

25.2.3 SPI MASTER MODE

The master can initiate the data transfer at any time because it controls the SCK line. The master determines when the slave (Processor 2, Figure 25-5) is to broadcast data by the software protocol.

In Master mode, the data is transmitted/received as soon as the SSP1BUF register is written to. If the SPI is only going to receive, the SDO output could be disabled (programmed as an input). The SSP1SR register will continue to shift in the signal present on the SDI pin at the programmed clock rate. As each byte is received, it will be loaded into the SSP1BUF register as if a normal received byte (interrupts and Status bits appropriately set).

The clock polarity is selected by appropriately programming the CKP bit of the SSP1CON1 register and the CKE bit of the SSP1STAT register. This then, would give waveforms for SPI communication as shown in Figure 25-6, Figure 25-9 and Figure 25-10, where the MSb is transmitted first. In Master mode, the SPI clock rate (bit rate) is user programmable to be one of the following:

- FOSC/4 (or TCY)
- FOSC/16 (or 4 * TCY)
- FOSC/64 (or 16 * TCY)
- Timer2 output/2
- Fosc/(4 * (SSP1ADD + 1))

Figure 25-6 shows the waveforms for Master mode.

When the CKE bit is set, the SDO data is valid before there is a clock edge on SCK. The change of the input sample is shown based on the state of the SMP bit. The time when the SSP1BUF is loaded with the received data is shown.

FIGURE 25-6: SPI MODE WAVEFORM (MASTER MODE)

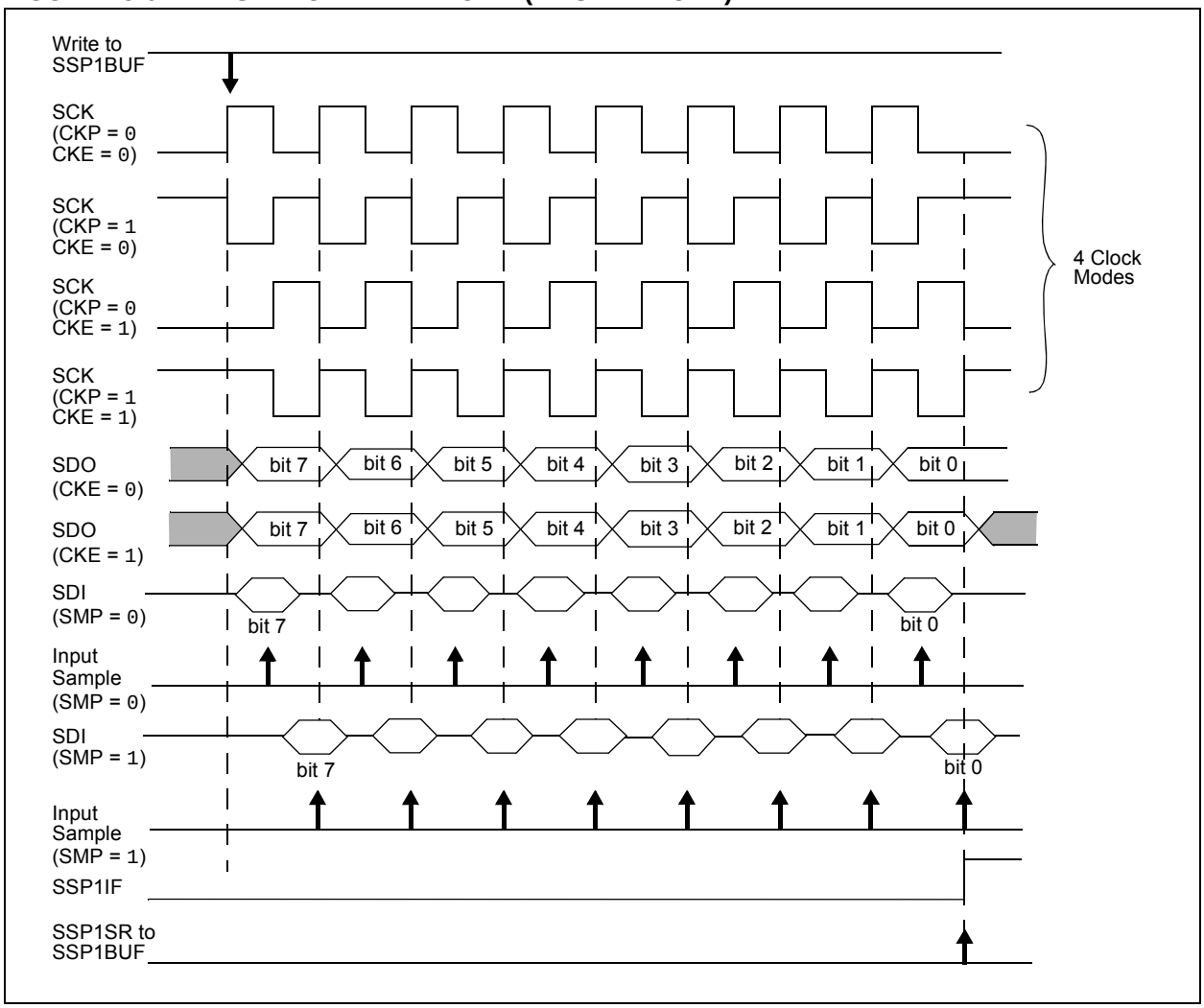

25.2.4 SPI SLAVE MODE

In Slave mode, the data is transmitted and received as external clock pulses appear on SCK. When the last bit is latched, the SSP1IF interrupt flag bit is set.

Before enabling the module in SPI Slave mode, the clock line must match the proper Idle state. The clock line can be observed by reading the SCK pin. The Idle state is determined by the CKP bit of the SSP1CON1 register.

While in Slave mode, the external clock is supplied by the external clock source on the SCK pin. This external clock must meet the minimum high and low times as specified in the electrical specifications.

While in Sleep mode, the slave can transmit/receive data. The shift register is clocked from the SCK pin input and when a byte is received, the device will generate an interrupt. If enabled, the device will wake-up from Sleep.

25.2.4.1 Daisy-Chain Configuration

The SPI bus can sometimes be connected in a daisy-chain configuration. The first slave output is connected to the second slave input, the second slave output is connected to the third slave input, and so on. The final slave output is connected to the master input. Each slave sends out, during a second group of clock pulses, an exact copy of what was received during the first group of clock pulses. The whole chain acts as one large communication shift register. The daisy-chain feature only requires a single Slave Select line from the master device.

Figure 25-7 shows the block diagram of a typical Daisy-Chain connection when operating in SPI Mode.

In a daisy-chain configuration, only the most recent byte on the bus is required by the slave. Setting the BOEN bit of the SSP1CON3 register will enable writes to the SSP1BUF register, even if the previous byte has not been read. This allows the software to ignore data that may not apply to it.

25.2.5 SLAVE SELECT SYNCHRONIZATION

The Slave Select can also be used to synchronize communication. The Slave Select line is held high until the master device is ready to communicate. When the Slave Select line is pulled low, the slave knows that a new transmission is starting.

If the slave fails to receive the communication properly, it will be reset at the end of the transmission, when the Slave Select line returns to a high state. The slave is then ready to receive a new transmission when the Slave Select line is pulled low again. If the Slave Select line is not used, there is a risk that the slave will eventually become out of sync with the master. If the slave misses a bit, it will always be one bit off in future transmissions. Use of the Slave Select line allows the slave and master to align themselves at the beginning of each transmission.

The $\overline{SS}$ pin allows a Synchronous Slave mode. The SPI must be in Slave mode with $\overline{SS}$ pin control enabled (SSP1CON1<3:0> = 0100).

When the $\overline{SS}$ pin is low, transmission and reception are enabled and the SDO pin is driven.

When the $\overline{SS}$ pin goes high, the SDO pin is no longer driven, even if in the middle of a transmitted byte and becomes a floating output. External pull-up/pull-down resistors may be desirable depending on the application.

Note 1: When the SPI is in Slave mode with $\overline{SS}$ pin control enabled (SSP1CON1<3:0> = 0100), the SPI module will reset if the $\overline{SS}$ pin is set to VDD.

2: When the SPI is used in Slave mode with CKE set; the user must enable $\overline{SS}$ pin control.

3: While operated in SPI Slave mode the SMP bit of the SSP1STAT register must remain clear.

When the SPI module resets, the bit counter is forced to '0'. This can be done by either forcing the $\overline{SS}$ pin to a high level or clearing the SSP1EN bit.

© 2010-2015 Microchip Technology Inc.

FIGURE 25-7: SPI DAISY-CHAIN CONNECTION

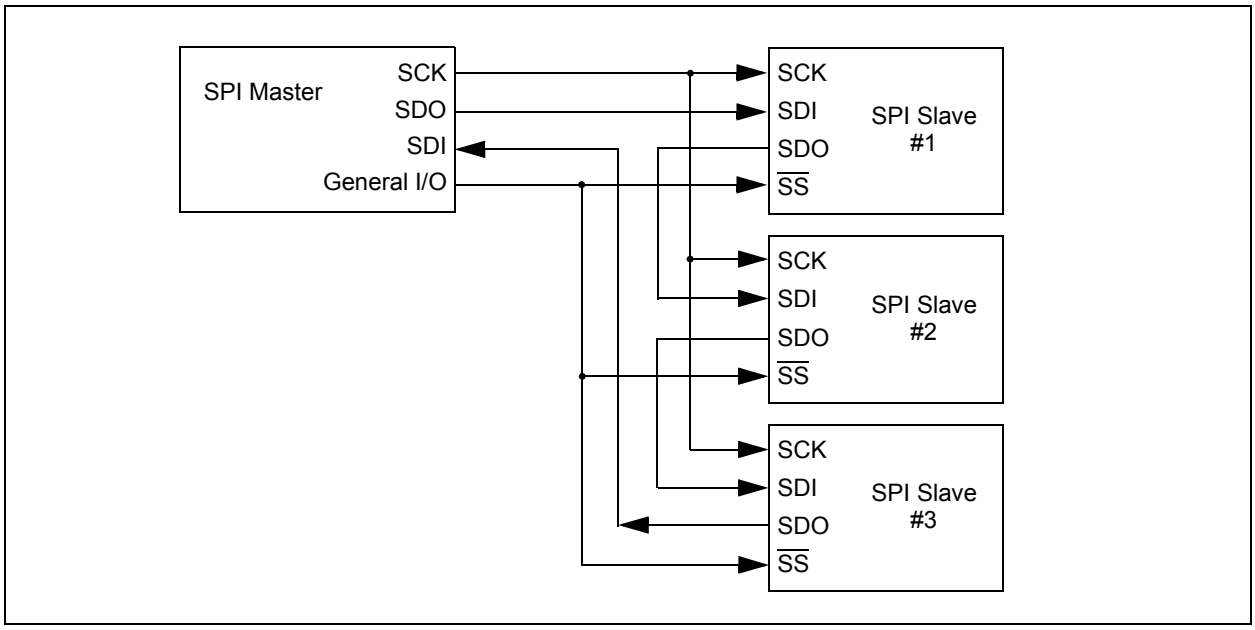

FIGURE 25-8: SLAVE SELECT SYNCHRONOUS WAVEFORM

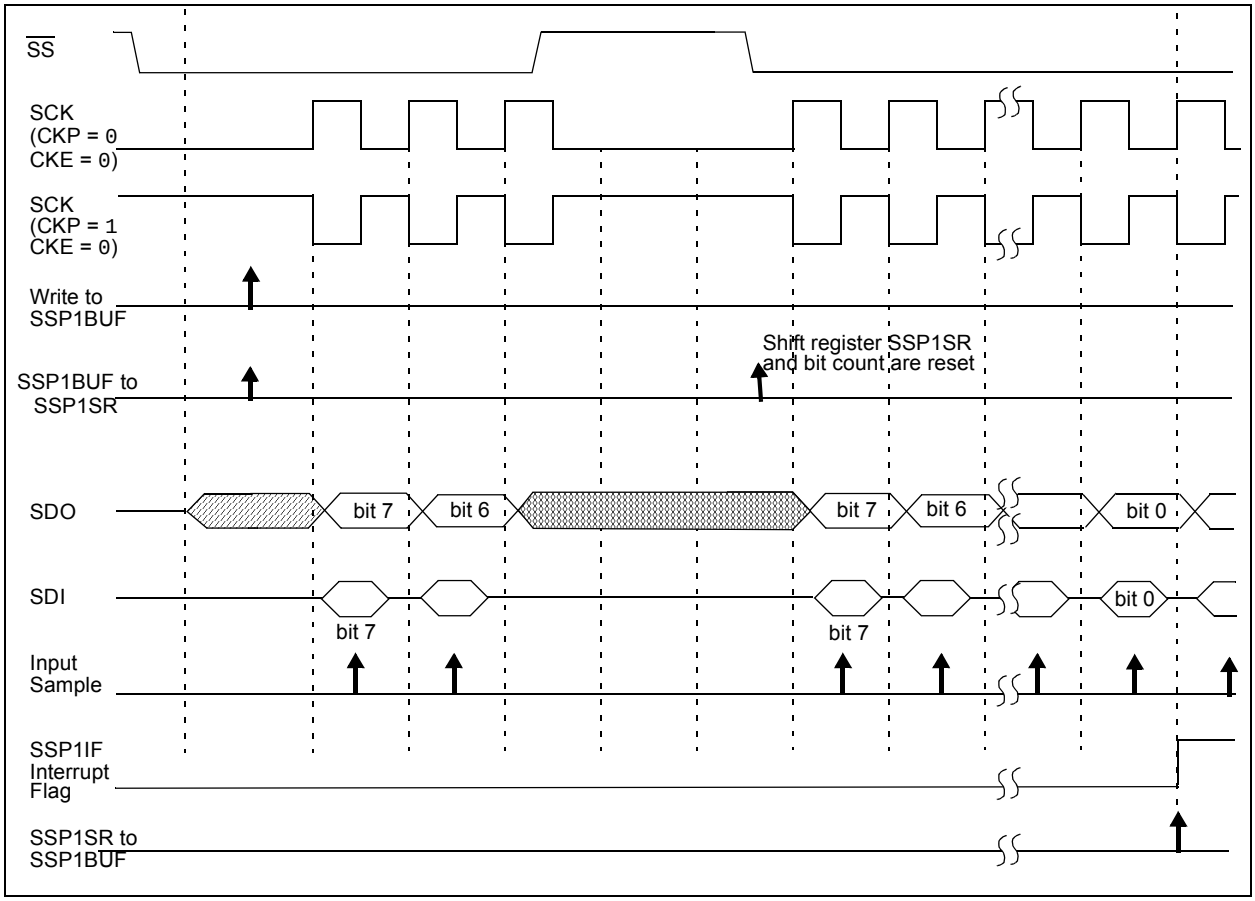

FIGURE 25-9: SPI MODE WAVEFORM (SLAVE MODE WITH CKE = 0)

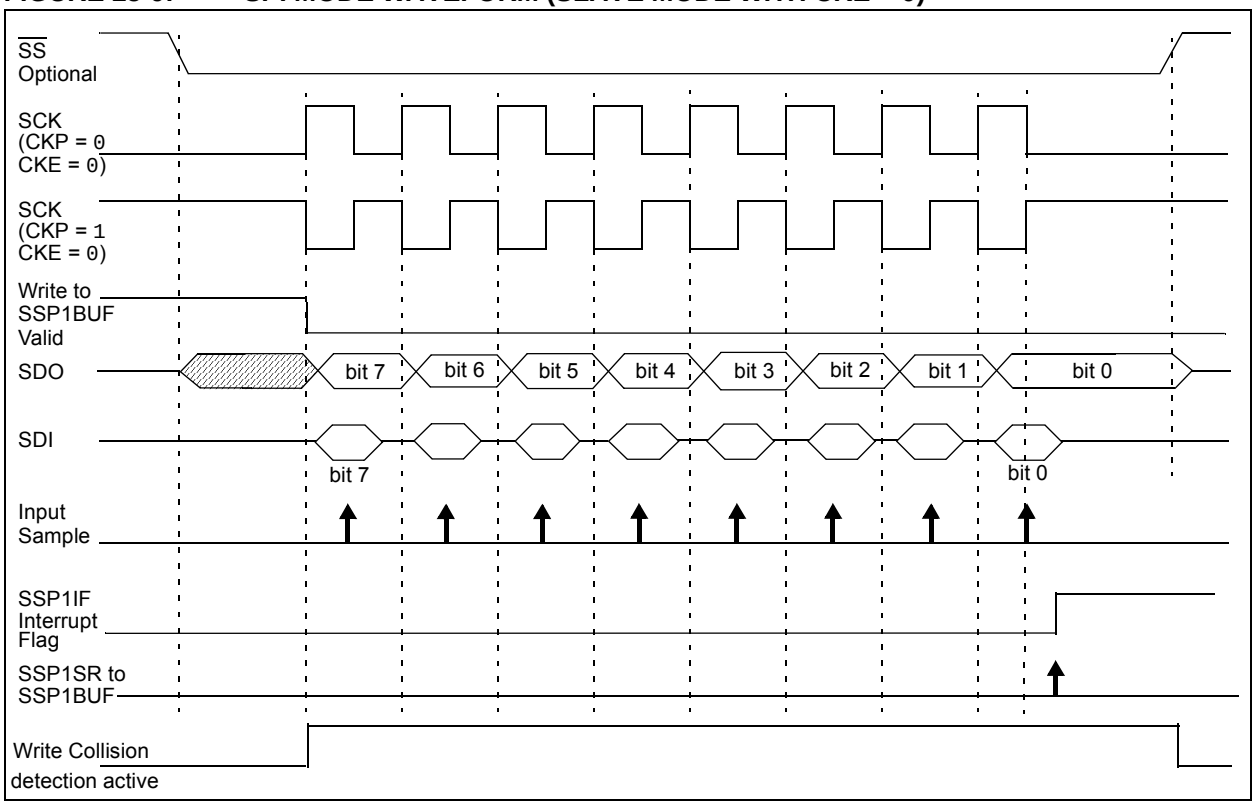

FIGURE 25-10: SPI MODE WAVEFORM (SLAVE MODE WITH CKE = 1)

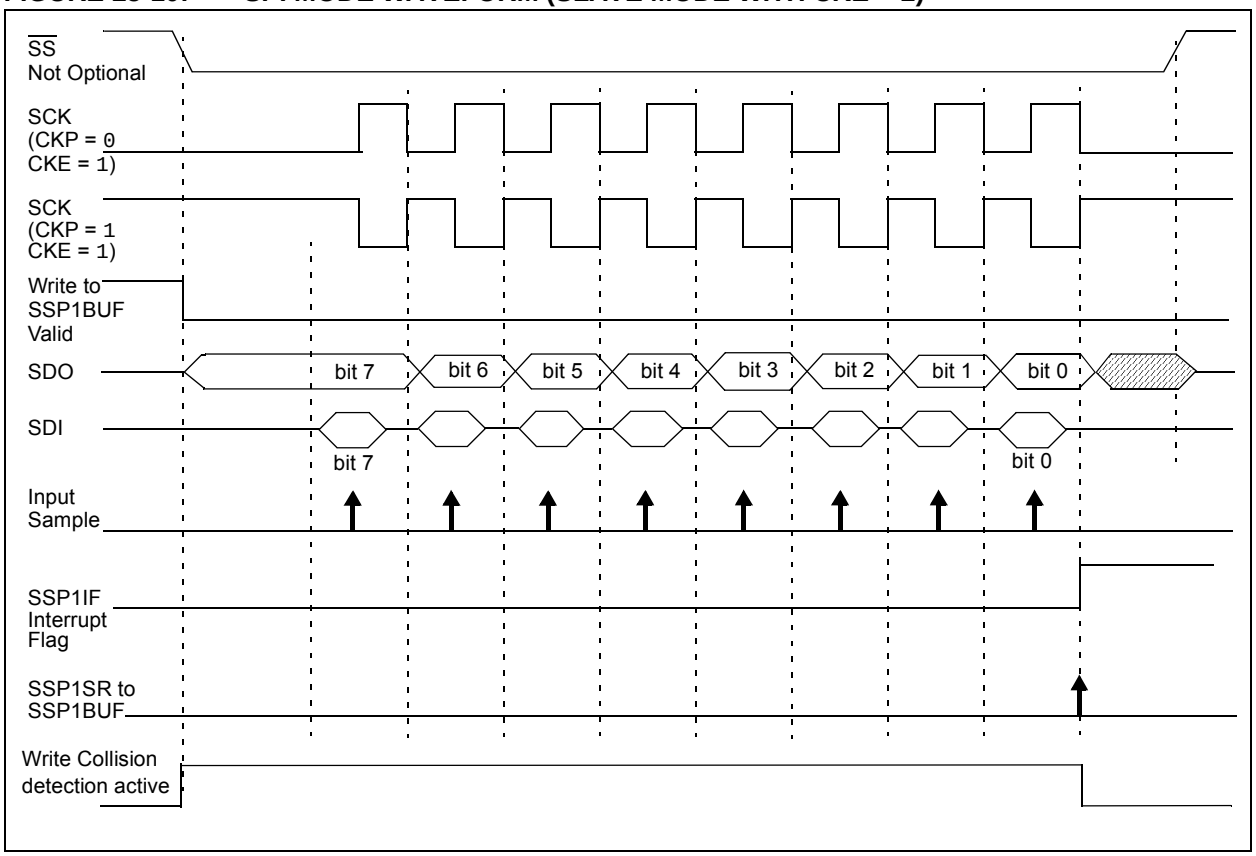

© 2010-2015 Microchip Technology Inc.

25.2.6 SPI OPERATION IN SLEEP MODE

In SPI Master mode, module clocks may be operating at a different speed than when in Full Power mode; in the case of the Sleep mode, all clocks are halted.

Special care must be taken by the user when the MSSP1 clock is much faster than the system clock.

In Slave mode, when MSSP1 interrupts are enabled, after the master completes sending data, an MSSP1 interrupt will wake the controller from Sleep.

If an exit from Sleep mode is not desired, MSSP1 interrupts should be disabled.

In SPI Master mode, when the Sleep mode is selected, all module clocks are halted and the transmission/reception will remain in that state until the device wakes. After the device returns to Run mode, the module will resume transmitting and receiving data.

In SPI Slave mode, the SPI Transmit/Receive Shift register operates asynchronously to the device. This allows the device to be placed in Sleep mode and data to be shifted into the SPI Transmit/Receive Shift register. When all eight bits have been received, the MSSP1 interrupt flag bit will be set and if enabled, will wake the device.

TABLE 25-1: SUMMARY OF REGISTERS ASSOCIATED WITH SPI OPERATION

Name	Bit 7	Bit 6	Bit 5	Bit 4	Bit 3	Bit 2	Bit 1	Bit 0	Register on Page
ANSELA	—	—	—	ANSA4	—	ANSA2	ANSA1	ANSA0	122
ANSELB(1)	—	—	ANSB5	ANSB4	—	—	—	—	128
ANSELC	ANSC7(1)	ANSC6(1)	—	—	ANSC3	ANSC2	ANSC1	ANSC0	128
APFCON0	RXDTSEL	SDOSEL(2)	SSSEL(2)	—	T1GSEL	TXCKSEL	—	—	117
INLVLA(3)	—	—	INLVLA5	INLVLA4	INLVLA3	INLVLA2	INLVLA1	INLVLA0	123
INLVLA(4)	—	—	INLVLA5	INLVLA4	INLVLA3	INLVLA2	INLVLA1	INLVLA0	123
INLVLB(1)	INLVLB7	INLVLB6	INLVLB5	INLVLB4	—	—	—	—	128
INLVLC(3)	INLVLC7(1)	INLVLC6(1)	INLVLC5	INLVLC4	INLVLC3	INLVLC2	INLVLC1	INLVLC0	134
INLVLC(4)	INLVLC7(1)	INLVLC6(1)	INLVLC5	INLVLC4	INLVLC3	INLVLC2	INLVLC1	INLVLC0	134
INTCON	GIE	PEIE	TMR0IE	INTE	IOCIE	TMR0IF	INTF	IOCIF	89
PIE1	TMR1GIE	ADIE	RCIE	TXIE	SSP1IE	CCP1IE	TMR2IE	TMR1IE	90
PIR1	TMR1GIF	ADIF	RCIF	TXIF	SSP1IF	CCP1IF	TMR2IF	TMR1IF	93
SSP1BUF	Synchronous Serial Port Receive Buffer/Transmit Register								234*
SSP1CON1	WCOL	SSPOV	SSPEN	CKP	SSPM<3:0>				281
SSP1CON3	ACKTIM	PCIE	SCIE	BOEN	SDAHT	SBCDE	AHEN	DHEN	283
SSP1STAT	SMP	CKE	D/$\overline{A}$	P	S	R/$\overline{W}$	UA	BF	280
TRISA(3)	—	—	TRISA5	TRISA4	TRISA3	TRISA2	TRISA1	TRISA0	121
TRISA(4)	—	—	TRISA5	TRISA4	TRISA3	TRISA2	TRISA1	TRISA0	121
TRISB(1)	TRISB7	TRISB6	TRISB5	TRISB4	—	—	—	—	127
TRISC(3)	TRISC7(1)	TRISC6(1)	TRISC5	TRISC4	TRISC3	TRISC2	TRISC1	TRISC0	127
TRISC(4)	TRISC7(1)	TRISC6(1)	TRISC5	TRISC4	TRISC3	TRISC2	TRISC1	TRISC0	127

Legend: — = Unimplemented location, read as '0'. Shaded cells are not used by the MSSP1 in SPI mode.
* Page provides register information.

Note 1: PIC16(L)F1828 only.
2: PIC16(L)F1824 only.
3: Unshaded cells apply to PIC16(L)F1828 only.
4: Unshaded cells apply to PIC16(L)F1824 only.

25.3 I²C Mode Overview

The Inter-Integrated Circuit Bus (I²C) is a multi-master serial data communication bus. Devices communicate in a master/slave environment where the master devices initiate the communication. A Slave device is controlled through addressing.

The I²C bus specifies two signal connections:

- Serial Clock (SCL)
- Serial Data (SDA)

Figure 25-2 and Figure 25-3 shows the block diagram of the MSSP1 module when operating in I²C Mode.

Both the SCL and SDA connections are bidirectional open-drain lines, each requiring pull-up resistors for the supply voltage. Pulling the line to ground is considered a logical zero and letting the line float is considered a logical one.

Figure 25-11 shows a typical connection between two processors configured as master and slave devices.

The I²C bus can operate with one or more master devices and one or more slave devices.

There are four potential modes of operation for a given device:

- Master Transmit mode
  (master is transmitting data to a slave)
- Master Receive mode
  (master is receiving data from a slave)
- Slave Transmit mode
  (slave is transmitting data to a master)
- Slave Receive mode
  (slave is receiving data from the master)

To begin communication, a master device starts out in Master Transmit mode. The master device sends out a Start bit followed by the address byte of the slave it intends to communicate with. This is followed by a single Read/Write bit, which determines whether the master intends to transmit to or receive data from the slave device.

If the requested slave exists on the bus, it will respond with an Acknowledge bit, otherwise known as an $\overline{\text{ACK}}$. The master then continues in either Transmit mode or Receive mode and the slave continues in the complement, either in Receive mode or Transmit mode, respectively.

A Start bit is indicated by a high-to-low transition of the SDA line while the SCL line is held high. Address and data bytes are sent out, Most Significant bit (MSb) first. The Read/Write bit is sent out as a logical one when the master intends to read data from the slave, and is sent out as a logical zero when it intends to write data to the slave.

FIGURE 25-11: I²C MASTER/ SLAVE CONNECTION

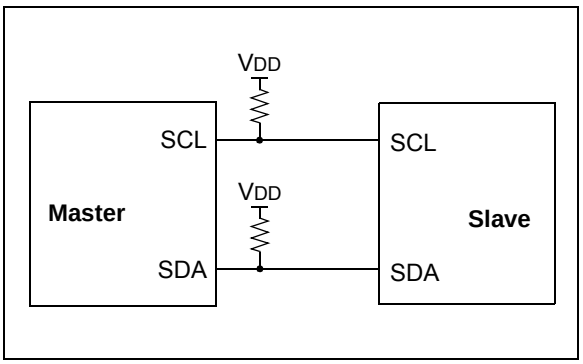

The Acknowledge bit ($\overline{\text{ACK}}$) is an active-low signal, which holds the SDA line low to indicate to the transmitter that the slave device has received the transmitted data and is ready to receive more.

The transition of a data bit is always performed while the SCL line is held low. Transitions that occur while the SCL line is held high are used to indicate Start and Stop bits.

If the master intends to write to the slave, then it repeatedly sends out a byte of data, with the slave responding after each byte with an $\overline{\text{ACK}}$ bit. In this example, the master device is in Master Transmit mode and the slave is in Slave Receive mode.

If the master intends to read from the slave, then it repeatedly receives a byte of data from the slave, and responds after each byte with an $\overline{\text{ACK}}$ bit. In this example, the master device is in Master Receive mode and the slave is Slave Transmit mode.

On the last byte of data communicated, the master device may end the transmission by sending a Stop bit. If the master device is in Receive mode, it sends the Stop bit in place of the last $\overline{\text{ACK}}$ bit. A Stop bit is indicated by a low-to-high transition of the SDA line while the SCL line is held high.

In some cases, the master may want to maintain control of the bus and re-initiate another transmission. If so, the master device may send another Start bit in place of the Stop bit or last $\overline{\text{ACK}}$ bit when it is in receive mode.

The I²C bus specifies three message protocols;

- Single message where a master writes data to a slave.
- Single message where a master reads data from a slave.
- Combined message where a master initiates a minimum of two writes, or two reads, or a combination of writes and reads, to one or more slaves.

© 2010-2015 Microchip Technology Inc.

When one device is transmitting a logical one, or letting the line float, and a second device is transmitting a logical zero, or holding the line low, the first device can detect that the line is not a logical one. This detection, when used on the SCL line, is called clock stretching. Clock stretching gives slave devices a mechanism to control the flow of data. When this detection is used on the SDA line, it is called arbitration. Arbitration ensures that there is only one master device communicating at any single time.

25.3.1 CLOCK STRETCHING

When a slave device has not completed processing data, it can delay the transfer of more data through the process of Clock Stretching. An addressed slave device may hold the SCL clock line low after receiving or sending a bit, indicating that it is not yet ready to continue. The master that is communicating with the slave will attempt to raise the SCL line in order to transfer the next bit, but will detect that the clock line has not yet been released. Because the SCL connection is open-drain, the slave has the ability to hold that line low until it is ready to continue communicating.

Clock stretching allows receivers that cannot keep up with a transmitter to control the flow of incoming data.

25.3.2 ARBITRATION

Each master device must monitor the bus for Start and Stop bits. If the device detects that the bus is busy, it cannot begin a new message until the bus returns to an Idle state.

However, two master devices may try to initiate a transmission on or about the same time. When this occurs, the process of arbitration begins. Each transmitter checks the level of the SDA data line and compares it to the level that it expects to find. The first transmitter to observe that the two levels don't match, loses arbitration, and must stop transmitting on the SDA line.

For example, if one transmitter holds the SDA line to a logical one (lets it float) and a second transmitter holds it to a logical zero (pulls it low), the result is that the SDA line will be low. The first transmitter then observes that the level of the line is different than expected and concludes that another transmitter is communicating.

The first transmitter to notice this difference is the one that loses arbitration and must stop driving the SDA line. If this transmitter is also a master device, it also must stop driving the SCL line. It then can monitor the lines for a Stop condition before trying to reissue its transmission. In the meantime, the other device that has not noticed any difference between the expected and actual levels on the SDA line continues with its original transmission. It can do so without any complications, because so far, the transmission appears exactly as expected with no other transmitter disturbing the message.

Slave Transmit mode can also be arbitrated, when a master addresses multiple slaves, but this is less common.

If two master devices are sending a message to two different slave devices at the address stage, the master sending the lower slave address always wins arbitration. When two master devices send messages to the same slave address, and addresses can sometimes refer to multiple slaves, the arbitration process must continue into the data stage.

Arbitration usually occurs very rarely, but it is a necessary process for proper multi-master support.

25.4 I²C Mode Operation

All MSSP1 I²C communication is byte oriented and shifted out MSb first. Six SFR registers and 2 interrupt flags interface the module with the PIC® microcontroller and user software. Two pins, SDA and SCL, are exercised by the module to communicate with other external I²C devices.

25.4.1 BYTE FORMAT

All communication in I²C is done in 9-bit segments. A byte is sent from a Master to a Slave or vice-versa, followed by an Acknowledge bit sent back. After the 8th falling edge of the SCL line, the device outputting data on the SDA changes that pin to an input and reads in an acknowledge value on the next clock pulse.

The clock signal, SCL, is provided by the master. Data is valid to change while the SCL signal is low, and sampled on the rising edge of the clock. Changes on the SDA line while the SCL line is high define special conditions on the bus, explained below.

25.4.2 DEFINITION OF I²C TERMINOLOGY

There is language and terminology in the description of I²C communication that have definitions specific to I²C. That word usage is defined below and may be used in the rest of this document without explanation. This table was adapted from the Phillips I²C specification.

25.4.3 SDA AND SCL PINS

Selection of any I²C mode with the SSP1EN bit set, forces the SCL and SDA pins to be open-drain. These pins should be set by the user to inputs by setting the appropriate TRIS bits.

Note:	Data is tied to output zero when an I²C mode is enabled.

25.4.4 SDA HOLD TIME

The hold time of the SDA pin is selected by the SDAHT bit of the SSP1CON3 register. Hold time is the time SDA is held valid after the falling edge of SCL. Setting the SDAHT bit selects a longer 300 ns minimum hold time and may help on buses with large capacitance.

TABLE 25-2: I^2C BUS TERMS

TERM	Description
Transmitter	The device which shifts data out onto the bus.
Receiver	The device which shifts data in from the bus.
Master	The device that initiates a transfer, generates clock signals and terminates a transfer.
Slave	The device addressed by the master.
Multi-master	A bus with more than one device that can initiate data transfers.
Arbitration	Procedure to ensure that only one master at a time controls the bus. Winning arbitration ensures that the message is not corrupted.
Synchronization	Procedure to synchronize the clocks of two or more devices on the bus.
Idle	No master is controlling the bus, and both SDA and SCL lines are high.
Active	Any time one or more master devices are controlling the bus.
Addressed Slave	Slave device that has received a matching address and is actively being clocked by a master.
Matching Address	Address byte that is clocked into a slave that matches the value stored in SSP1ADD.
Write Request	Slave receives a matching address with R/$\overline{W}$ bit clear, and is ready to clock in data.
Read Request	Master sends an address byte with the R/$\overline{W}$ bit set, indicating that it wishes to clock data out of the Slave. This data is the next and all following bytes until a Restart or Stop.
Clock Stretching	When a device on the bus hold SCL low to stall communication.
Bus Collision	Any time the SDA line is sampled low by the module while it is out-putting and expected high state.

© 2010-2015 Microchip Technology Inc.

25.4.5 START CONDITION

The I^2C specification defines a Start condition as a transition of SDA from a high to a low state while SCL line is high. A Start condition is always generated by the master and signifies the transition of the bus from an Idle to an Active state. Figure 25-12 shows wave forms for Start and Stop conditions.

A bus collision can occur on a Start condition if the module samples the SDA line low before asserting it low. This does not conform to the I^2C Specification that states no bus collision can occur on a Start.

25.4.6 STOP CONDITION

A Stop condition is a transition of the SDA line from low-to-high state while the SCL line is high.

Note: At least one SCL low time must appear before a Stop is valid, therefore, if the SDA line goes low then high again while the SCL line stays high, only the Start condition is detected.

25.4.7 RESTART CONDITION

A Restart is valid any time that a Stop would be valid. A master can issue a Restart if it wishes to hold the bus after terminating the current transfer. A Restart has the same effect on the slave that a Start would, resetting all slave logic and preparing it to clock in an address. The master may want to address the same or another slave.

In 10-bit Addressing Slave mode a Restart is required for the master to clock data out of the addressed slave. Once a slave has been fully addressed, matching both high and low address bytes, the master can issue a Restart and the high address byte with the R/$\overline{W}$ bit set. The slave logic will then hold the clock and prepare to clock out data.

After a full match with R/$\overline{W}$ clear in 10-bit mode, a prior match flag is set and maintained. Until a Stop condition, a high address with R/$\overline{W}$ clear, or high address match fails.

25.4.8 START/STOP CONDITION INTERRUPT MASKING

The SCIE and PCIE bits of the SSP1CON3 register can enable the generation of an interrupt in Slave modes that do not typically support this function. Slave modes where interrupt on Start and Stop detect are already enabled, these bits will have no effect.

FIGURE 25-12: I^2C START AND STOP CONDITIONS

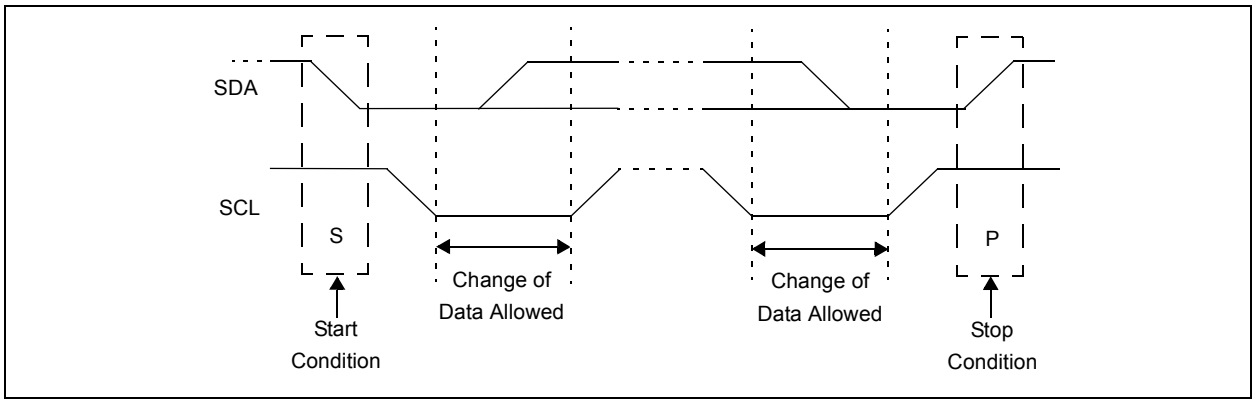

FIGURE 25-13: I^2C RESTART CONDITION

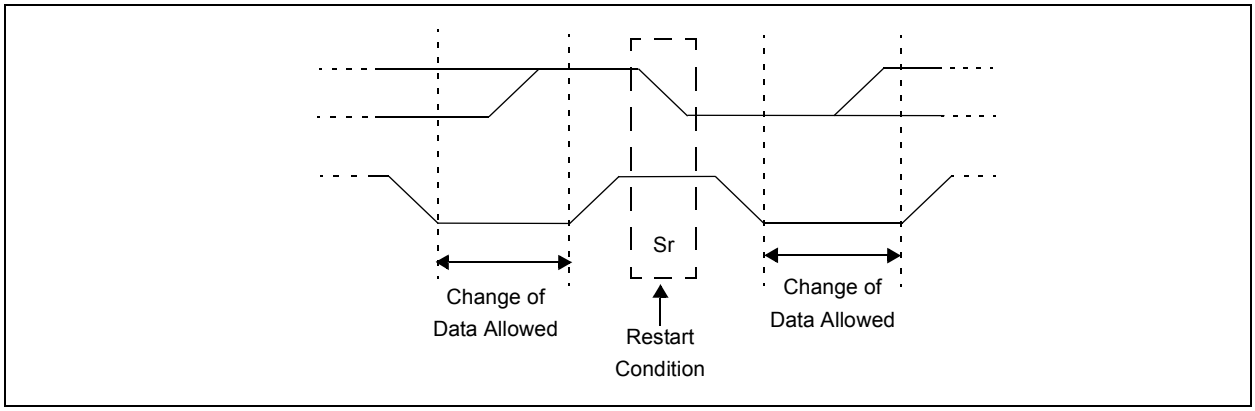

25.4.9 ACKNOWLEDGE SEQUENCE

The 9th SCL pulse for any transferred byte in I^2C is dedicated as an Acknowledge. It allows receiving devices to respond back to the transmitter by pulling the SDA line low. The transmitter must release control of the line during this time to shift in the response. The Acknowledge ($\overline{ACK}$) is an active-low signal, pulling the SDA line low indicated to the transmitter that the device has received the transmitted data and is ready to receive more.

The result of an $\overline{ACK}$ is placed in the ACKSTAT bit of the SSP1CON2 register.

Slave software, when the AHEN and DHEN bits are set, allow the user to set the $\overline{ACK}$ value sent back to the transmitter. The ACKDT bit of the SSP1CON2 register is set/cleared to determine the response.

Slave hardware will generate an $\overline{ACK}$ response if the AHEN and DHEN bits of the SSP1CON3 register are clear.

There are certain conditions where an $\overline{ACK}$ will not be sent by the slave. If the BF bit of the SSP1STAT register or the SSPOV bit of the SSP1CON1 register are set when a byte is received.

When the module is addressed, after the 8th falling edge of SCL on the bus, the ACKTIM bit of the SSP1CON3 register is set. The ACKTIM bit indicates the acknowledge time of the active bus. The ACKTIM Status bit is only active when the AHEN bit or DHEN bit is enabled.

25.5 I^2C Slave Mode Operation

The MSSP1 Slave mode operates in one of four modes selected in the SSP1M bits of SSP1CON1 register. The modes can be divided into 7-bit and 10-bit Addressing mode. 10-bit Addressing modes operate the same as 7-bit with some additional overhead for handling the larger addresses.

Modes with Start and Stop bit interrupts operate the same as the other modes with SSP1IF additionally getting set upon detection of a Start, Restart, or Stop condition.

25.5.1 SLAVE MODE ADDRESSES

The SSP1ADD register (Register 25-6) contains the Slave mode address. The first byte received after a Start or Restart condition is compared against the value stored in this register. If the byte matches, the value is loaded into the SSP1BUF register and an interrupt is generated. If the value does not match, the module goes idle and no indication is given to the software that anything happened.

The SSP Mask register (Register 25-5) affects the address matching process. See **Section 25.5.9 "SSP1 Mask Register"** for more information.

25.5.1.1 I^2C Slave 7-bit Addressing Mode

In 7-bit Addressing mode, the LSb of the received data byte is ignored when determining if there is an address match.

25.5.1.2 I^2C Slave 10-bit Addressing Mode

In 10-bit Addressing mode, the first received byte is compared to the binary value of '1 1 1 1 0 A9 A8 0'. A9 and A8 are the two MSb of the 10-bit address and stored in bits 2 and 1 of the SSP1ADD register.

After the acknowledge of the high byte the UA bit is set and SCL is held low until the user updates SSP1ADD with the low address. The low address byte is clocked in and all eight bits are compared to the low address value in SSP1ADD. Even if there is not an address match; SSP1IF and UA are set, and SCL is held low until SSP1ADD is updated to receive a high byte again. When SSP1ADD is updated the UA bit is cleared. This ensures the module is ready to receive the high address byte on the next communication.

A high and low address match as a write request is required at the start of all 10-bit addressing communication. A transmission can be initiated by issuing a Restart once the slave is addressed, and clocking in the high address with the $R/\overline{W}$ bit set. The slave hardware will then acknowledge the read request and prepare to clock out data. This is only valid for a slave after it has received a complete high and low address byte match.

© 2010-2015 Microchip Technology Inc.

25.5.2 SLAVE RECEPTION

When the R/$\overline{W}$ bit of a matching received address byte is clear, the R/$\overline{W}$ bit of the SSP1STAT register is cleared. The received address is loaded into the SSP1BUF register and acknowledged.

When the overflow condition exists for a received address, then not Acknowledge is given. An overflow condition is defined as either bit BF bit of the SSP1STAT register is set, or bit SSPOV bit of the SSP1CON1 register is set. The BOEN bit of the SSP1CON3 register modifies this operation. For more information see Register 25-4.

An MSSP1 interrupt is generated for each transferred data byte. Flag bit, SSP1IF, must be cleared by software.

When the SEN bit of the SSP1CON2 register is set, SCL will be held low (clock stretch) following each received byte. The clock must be released by setting the CKP bit of the SSP1CON1 register, except sometimes in 10-bit mode. See **Section 25.2.3 "SPI Master Mode"** for more detail.

25.5.2.1 7-bit Addressing Reception

This section describes a standard sequence of events for the MSSP1 module configured as an I^2C Slave in 7-bit Addressing mode. Figure 25-14 and Figure 25-15 are used as a visual reference for this description.

This is a step by step process of what typically must be done to accomplish I^2C communication.

1. Start bit detected.
2. S bit of SSP1STAT is set; SSP1IF is set if interrupt on Start detect is enabled.
3. Matching address with R/$\overline{W}$ bit clear is received.
4. The slave pulls SDA low sending an $\overline{ACK}$ to the master, and sets SSP1IF bit.
5. Software clears the SSP1IF bit.
6. Software reads received address from SSP1BUF clearing the BF flag.
7. If SEN = 1; Slave software sets CKP bit to release the SCL line.
8. The master clocks out a data byte.
9. Slave drives SDA low sending an $\overline{ACK}$ to the master, and sets SSP1IF bit.
10. Software clears SSP1IF.
11. Software reads the received byte from SSP1BUF clearing BF.
12. Steps 8-12 are repeated for all received bytes from the Master.
13. Master sends Stop condition, setting P bit of SSP1STAT, and the bus goes idle.

25.5.2.2 7-bit Reception with AHEN and DHEN

Slave device reception with AHEN and DHEN set operate the same as without these options with extra interrupts and clock stretching added after the 8th falling edge of SCL. These additional interrupts allow the slave software to decide whether it wants to $\overline{ACK}$ the receive address or data byte, rather than the hardware. This functionality adds support for PMBus™ that was not present on previous versions of this module.

This list describes the steps that need to be taken by slave software to use these options for I^2C communication. Figure 25-16 displays a module using both address and data holding. Figure 25-17 includes the operation with the SEN bit of the SSP1CON2 register set.

1. S bit of SSP1STAT is set; SSP1IF is set if interrupt on Start detect is enabled.
2. Matching address with R/$\overline{W}$ bit clear is clocked in. SSP1IF is set and CKP cleared after the 8th falling edge of SCL.
3. Slave clears the SSP1IF.
4. Slave can look at the ACKTIM bit of the SSP1CON3 register to determine if the SSP1IF was after or before the $\overline{ACK}$.
5. Slave reads the address value from SSP1BUF, clearing the BF flag.
6. Slave sets $\overline{ACK}$ value clocked out to the master by setting ACKDT.
7. Slave releases the clock by setting CKP.
8. SSP1IF is set after an $\overline{ACK}$, not after a NACK.
9. If SEN = 1 the slave hardware will stretch the clock after the $\overline{ACK}$.
10. Slave clears SSP1IF.

Note: SSP1IF is still set after the 9th falling edge of SCL even if there is no clock stretching and BF has been cleared. Only if NACK is sent to Master is SSP1IF not set

11. SSP1IF set and CKP cleared after 8th falling edge of SCL for a received data byte.
12. Slave looks at ACKTIM bit of SSP1CON3 to determine the source of the interrupt.
13. Slave reads the received data from SSP1BUF clearing BF.
14. Steps 7-14 are the same for each received data byte.
15. Communication is ended by either the slave sending an $\overline{ACK}$ = 1, or the master sending a Stop condition. If a Stop is sent and Interrupt on Stop Detect is disabled, the slave will only know by polling the P bit of the SSPSTAT register.

FIGURE 25-14: I²C SLAVE, 7-BIT ADDRESS, RECEPTION (SEN = 0, AHEN = 0, DHEN = 0)

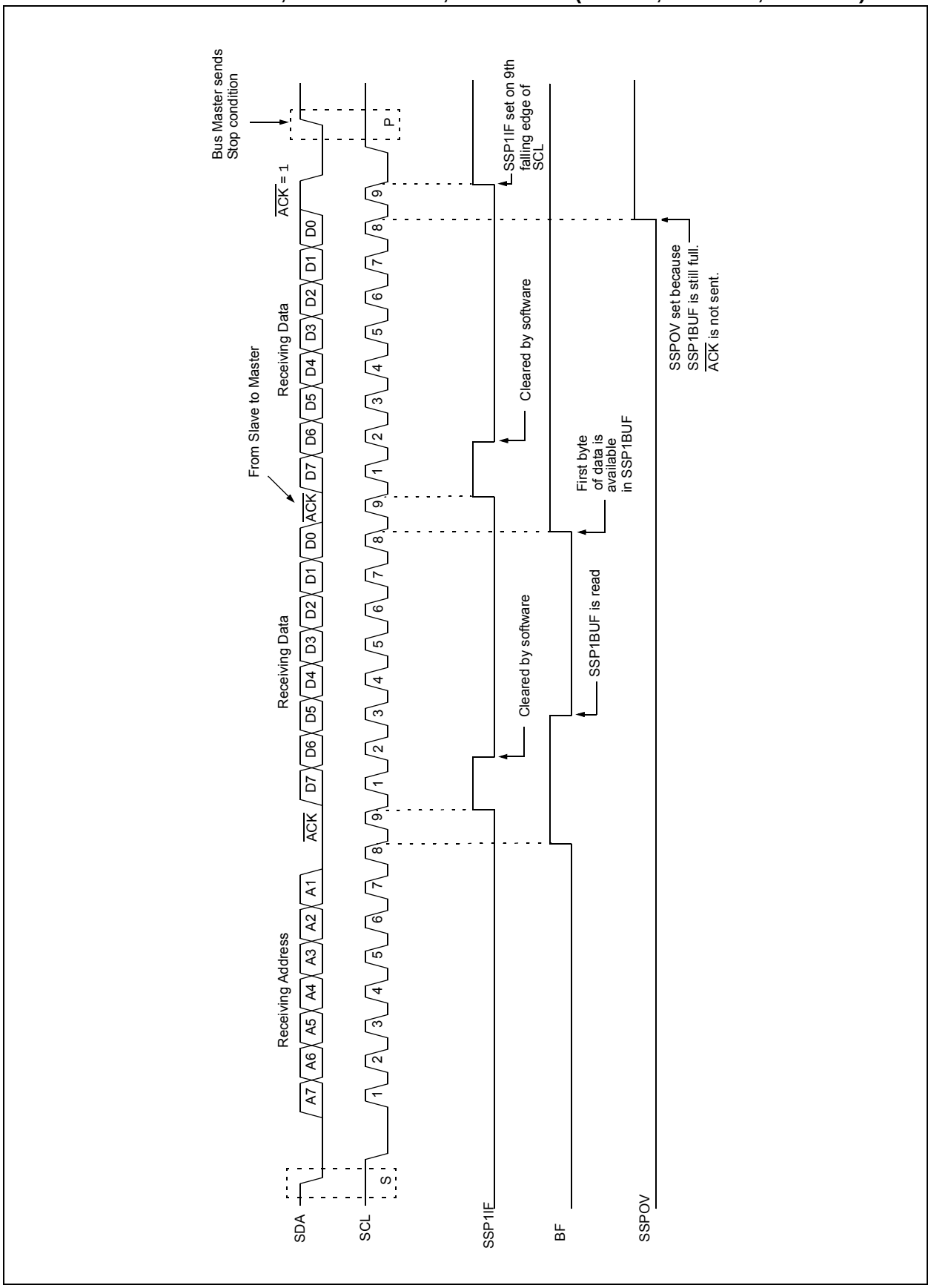

© 2010-2015 Microchip Technology Inc.

FIGURE 25-15: I²C SLAVE, 7-BIT ADDRESS, RECEPTION (SEN = 1, AHEN = 0, DHEN = 0)

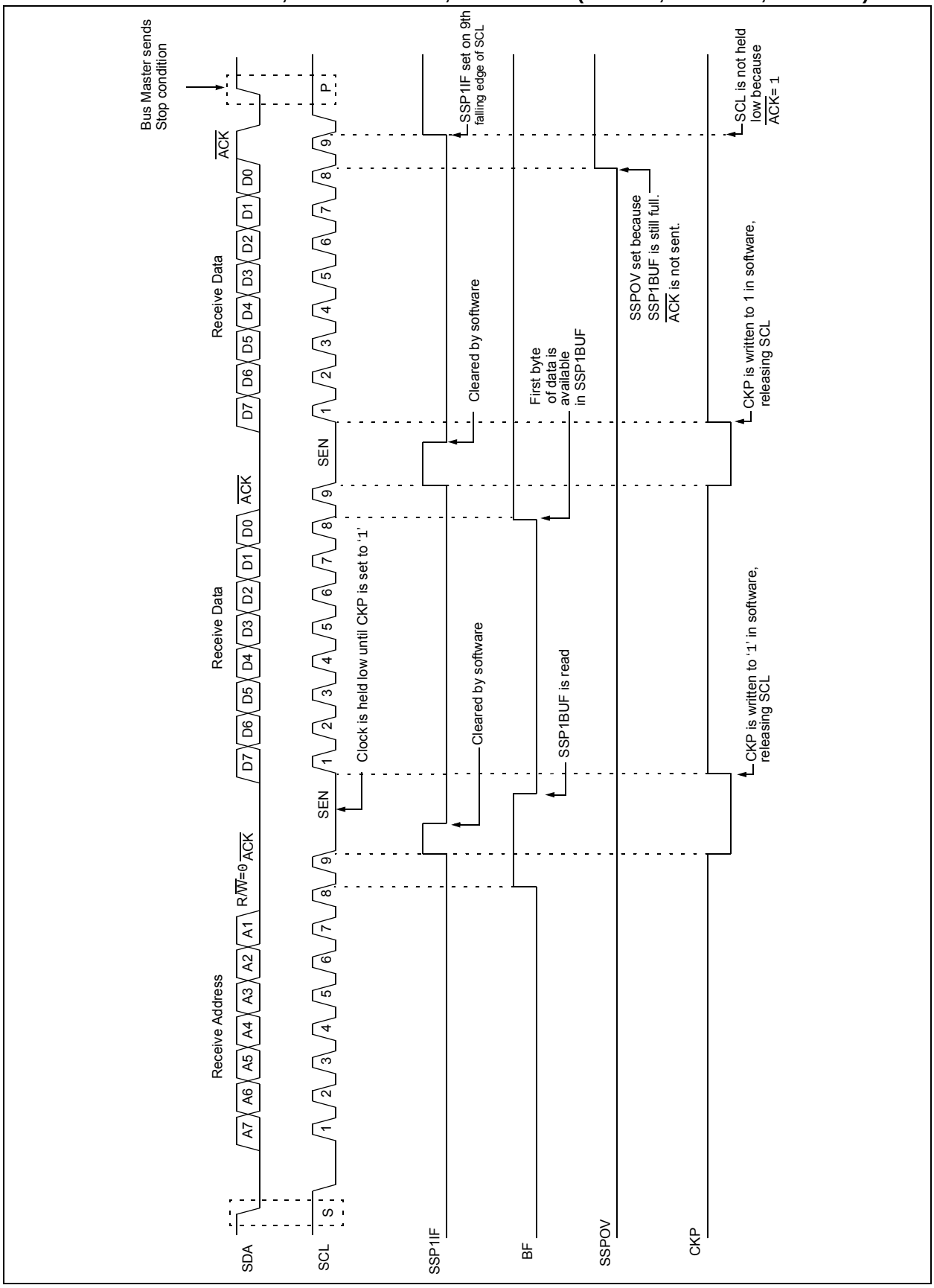

FIGURE 25-16: I²C SLAVE, 7-BIT ADDRESS, RECEPTION (SEN = 0, AHEN = 1, DHEN = 1)

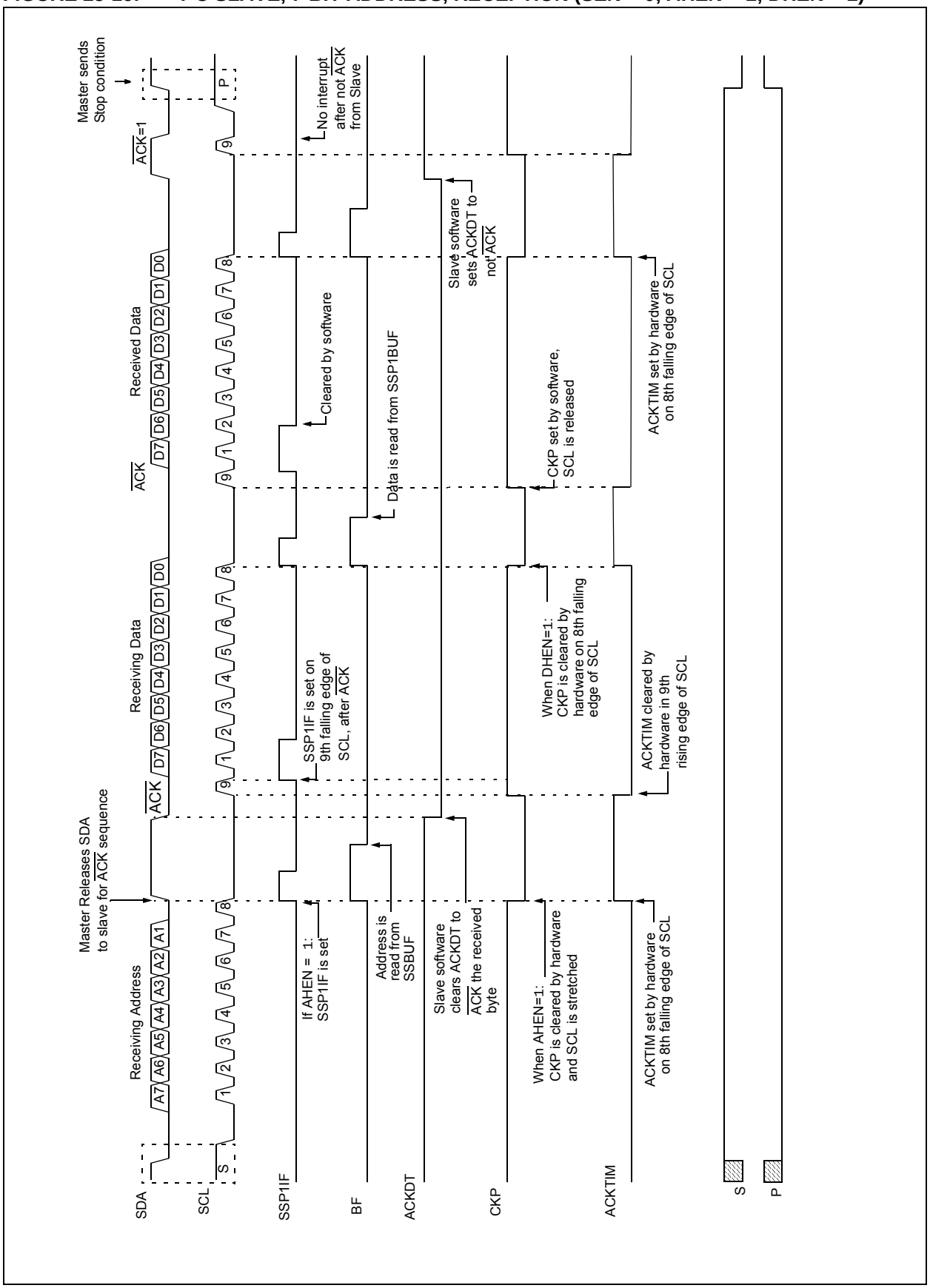

© 2010-2015 Microchip Technology Inc.

FIGURE 25-17: I²C SLAVE, 7-BIT ADDRESS, RECEPTION (SEN = 1, AHEN = 1, DHEN = 1)

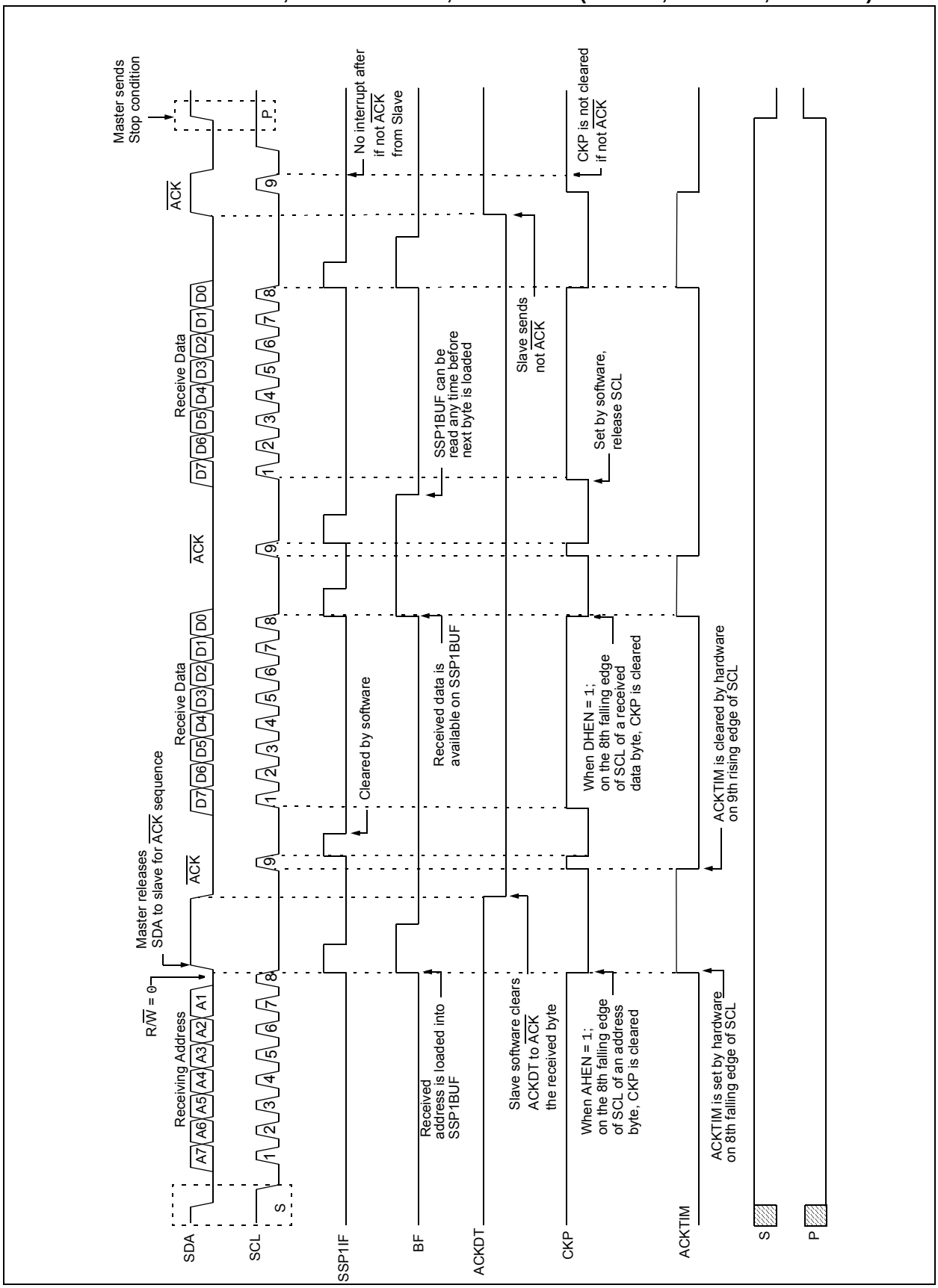

25.5.3 SLAVE TRANSMISSION

When the R/$\overline{W}$ bit of the incoming address byte is set and an address match occurs, the R/$\overline{W}$ bit of the SSP1STAT register is set. The received address is loaded into the SSP1BUF register, and an $\overline{ACK}$ pulse is sent by the slave on the ninth bit.

Following the $\overline{ACK}$, slave hardware clears the CKP bit and the SCL pin is held low (see **Section 25.5.6 "Clock Stretching"** for more detail). By stretching the clock, the master will be unable to assert another clock pulse until the slave is done preparing the transmit data.

The transmit data must be loaded into the SSP1BUF register which also loads the SSP1SR register. Then the SCL pin should be released by setting the CKP bit of the SSP1CON1 register. The eight data bits are shifted out on the falling edge of the SCL input. This ensures that the SDA signal is valid during the SCL high time.

The $\overline{ACK}$ pulse from the master-receiver is latched on the rising edge of the ninth SCL input pulse. This $\overline{ACK}$ value is copied to the ACKSTAT bit of the SSP1CON2 register. If ACKSTAT is set (not $\overline{ACK}$), then the data transfer is complete. In this case, when the not $\overline{ACK}$ is latched by the slave, the slave goes idle and waits for another occurrence of the Start bit. If the SDA line was low ($\overline{ACK}$), the next transmit data must be loaded into the SSP1BUF register. Again, the SCL pin must be released by setting bit CKP.

An MSSP1 interrupt is generated for each data transfer byte. The SSP1IF bit must be cleared by software and the SSP1STAT register is used to determine the status of the byte. The SSP1IF bit is set on the falling edge of the ninth clock pulse.

25.5.3.1 Slave Mode Bus Collision

A slave receives a read request and begins shifting data out on the SDA line. If a bus collision is detected and the SBCDE bit of the SSP1CON3 register is set, the BCL1IF bit of the PIRx register is set. Once a bus collision is detected, the slave goes Idle and waits to be addressed again. User software can use the BCL1IF bit to handle a slave bus collision.

25.5.3.2 7-bit Transmission

A master device can transmit a read request to a slave, and then clock data out of the slave. The list below outlines what software for a slave will need to do to accomplish a standard transmission. Figure 25-18 can be used as a reference to this list.

1. Master sends a Start condition on SDA and SCL.
2. S bit of SSP1STAT is set; SSP1IF is set if interrupt on Start detect is enabled.
3. Matching address with R/$\overline{W}$ bit set is received by the Slave setting SSP1IF bit.
4. Slave hardware generates an $\overline{ACK}$ and sets SSP1IF.
5. SSP1IF bit is cleared by user.
6. Software reads the received address from SSP1BUF, clearing BF.
7. R/$\overline{W}$ is set so CKP was automatically cleared after the $\overline{ACK}$.
8. The slave software loads the transmit data into SSP1BUF.
9. CKP bit is set releasing SCL, allowing the master to clock the data out of the slave.
10. SSP1IF is set after the $\overline{ACK}$ response from the master is loaded into the ACKSTAT register.
11. SSP1IF bit is cleared.
12. The slave software checks the ACKSTAT bit to see if the master wants to clock out more data.

Note 1: If the master $\overline{ACK}$s the clock will be stretched.

2: ACKSTAT is the only bit updated on the rising edge of SCL (9th) rather than the falling.

13. Steps 9-13 are repeated for each transmitted byte.
14. If the master sends a not $\overline{ACK}$; the clock is not held, but SSP1IF is still set.
15. The master sends a Restart condition or a Stop.
16. The slave is no longer addressed.

© 2010-2015 Microchip Technology Inc.

FIGURE 25-18: I²C SLAVE, 7-BIT ADDRESS, TRANSMISSION (AHEN = 0)

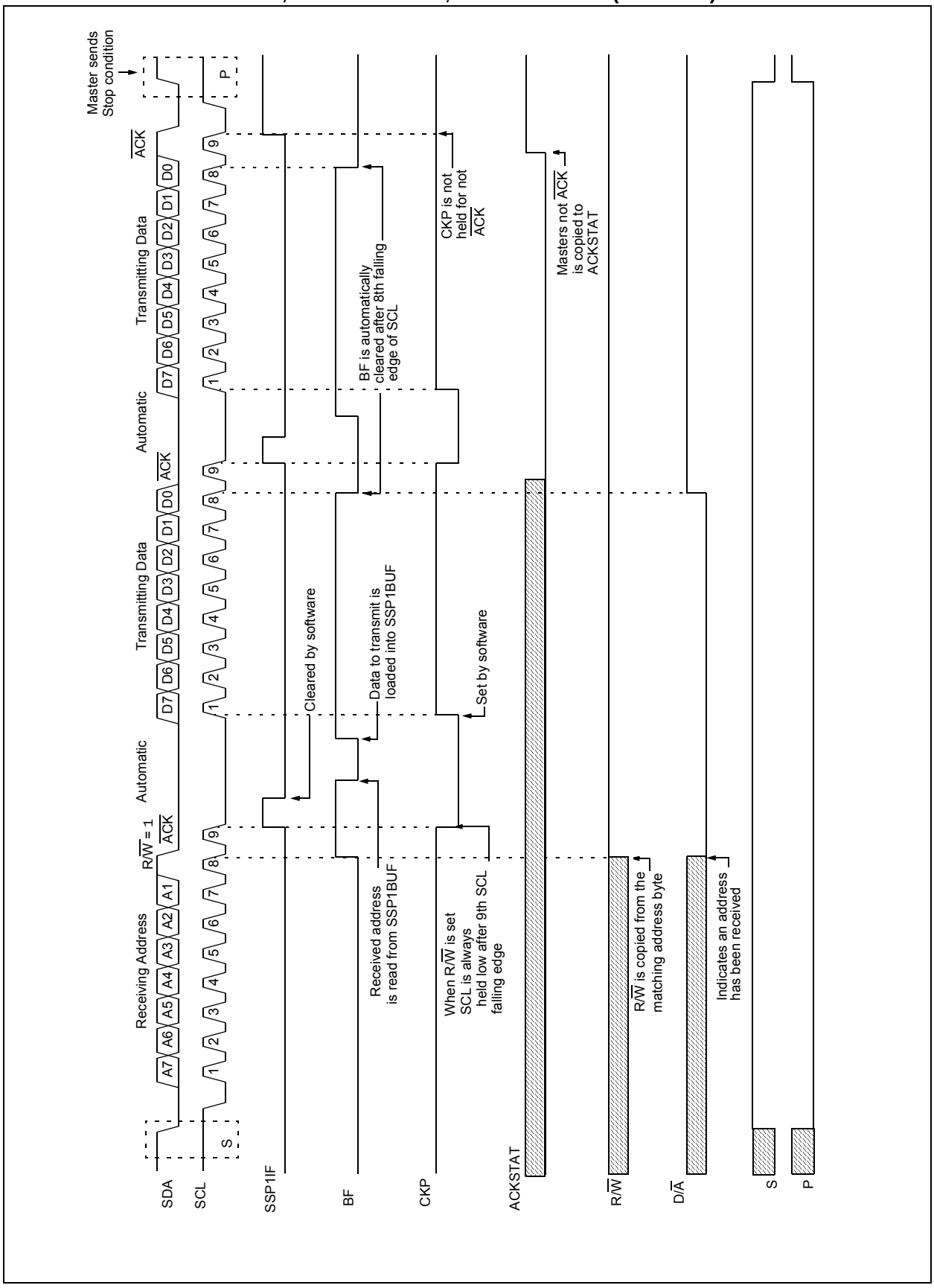

25.5.3.3 7-bit Transmission with Address Hold Enabled

Setting the AHEN bit of the SSP1CON3 register enables additional clock stretching and interrupt generation after the eighth falling edge of a received matching address. Once a matching address has been clocked in, CKP is cleared and the SSP1IF interrupt is set.

Figure 25-19 displays a standard waveform of a 7-bit Address Slave Transmission with AHEN enabled.

1. Bus starts Idle.
2. Master sends Start condition; the S bit of SSP1STAT is set; SSP1IF is set if interrupt on Start detect is enabled.
3. Master sends matching address with R/$\overline{W}$ bit set. After the eighth falling edge of the SCL line the CKP bit is cleared and SSP1IF interrupt is generated.
4. Slave software clears SSP1IF.
5. Slave software reads ACKTIM bit of SSP1CON3 register, and R/$\overline{W}$ and D/$\overline{A}$ of the SSP1STAT register to determine the source of the interrupt.
6. Slave reads the address value from the SSP1BUF register clearing the BF bit.
7. Slave software decides from this information if it wishes to $\overline{ACK}$ or not $\overline{ACK}$ and sets ACKDT bit of the SSP1CON2 register accordingly.
8. Slave sets the CKP bit releasing SCL.
9. Master clocks in the $\overline{ACK}$ value from the slave.
10. Slave hardware automatically clears the CKP bit and sets SSP1IF after the $\overline{ACK}$ if the R/$\overline{W}$ bit is set.
11. Slave software clears SSP1IF.
12. Slave loads value to transmit to the master into SSP1BUF setting the BF bit.

Note: SSP1BUF cannot be loaded until after the $\overline{ACK}$.

13. Slave sets CKP bit releasing the clock.
14. Master clocks out the data from the slave and sends an $\overline{ACK}$ value on the 9th SCL pulse.
15. Slave hardware copies the $\overline{ACK}$ value into the ACKSTAT bit of the SSP1CON2 register.
16. Steps 10-15 are repeated for each byte transmitted to the master from the slave.
17. If the master sends a not $\overline{ACK}$ the slave releases the bus allowing the master to send a Stop and end the communication.

Note: Master must send a not $\overline{ACK}$ on the last byte to ensure that the slave releases the SCL line to receive a Stop.

© 2010-2015 Microchip Technology Inc.

FIGURE 25-19: I²C SLAVE, 7-BIT ADDRESS, TRANSMISSION (AHEN = 1)

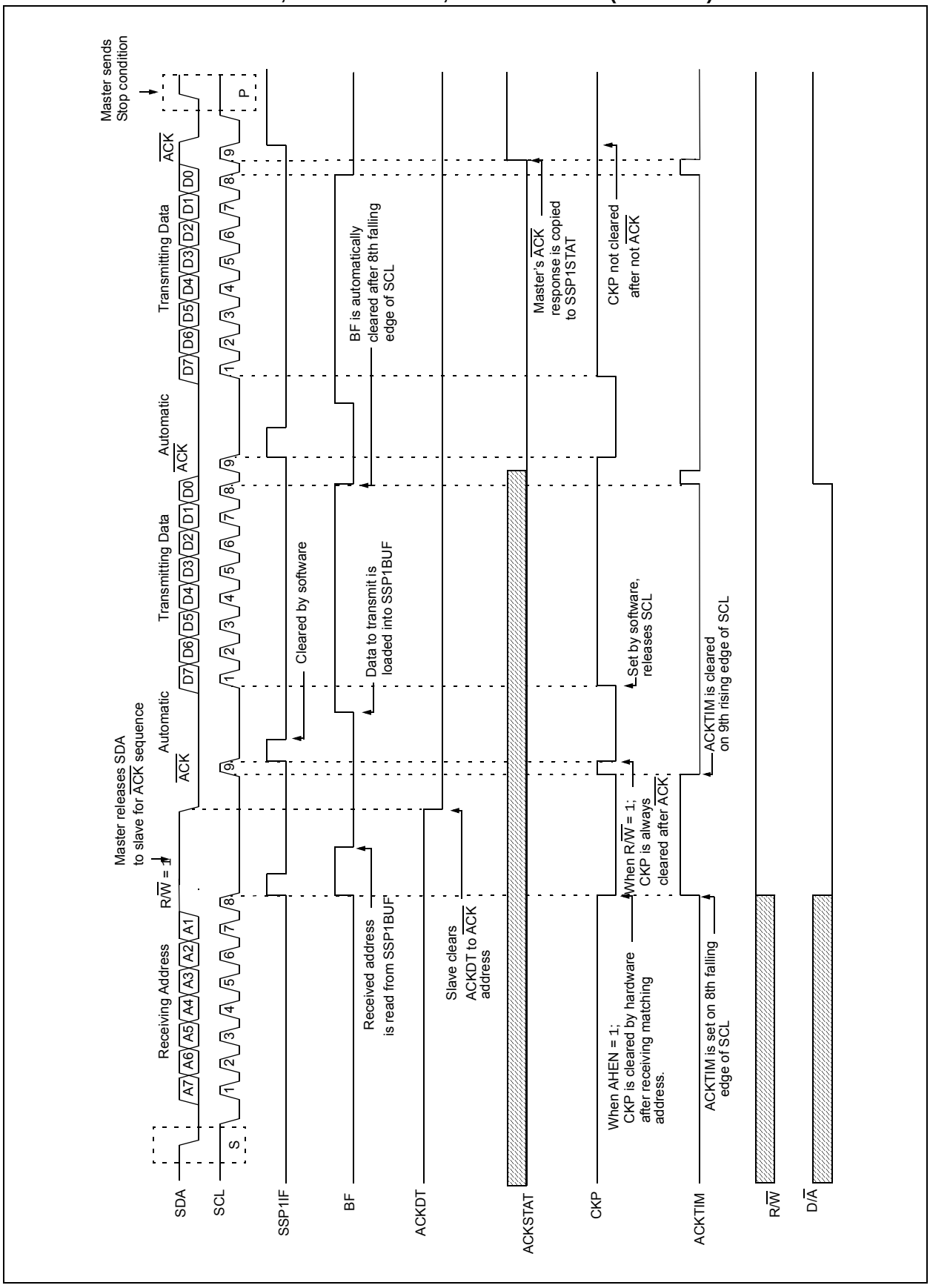

25.5.4 SLAVE MODE 10-BIT ADDRESS RECEPTION

This section describes a standard sequence of events for the MSSP1 module configured as an I^2C Slave in 10-bit Addressing mode.

Figure 25-20 is used as a visual reference for this description.

This is a step by step process of what must be done by slave software to accomplish I^2C communication.

1. Bus starts Idle.
2. Master sends Start condition; S bit of SSP1STAT is set; SSP1IF is set if interrupt on Start detect is enabled.
3. Master sends matching high address with R/$\overline{W}$ bit clear; UA bit of the SSP1STAT register is set.
4. Slave sends $\overline{ACK}$ and SSP1IF is set.
5. Software clears the SSP1IF bit.
6. Software reads received address from SSP1BUF clearing the BF flag.
7. Slave loads low address into SSP1ADD, releasing SCL.
8. Master sends matching low address byte to the Slave; UA bit is set.

Note: Updates to the SSP1ADD register are not allowed until after the $\overline{ACK}$ sequence.

9. Slave sends $\overline{ACK}$ and SSP1IF is set.

Note: If the low address does not match, SSP1IF and UA are still set so that the slave software can set SSP1ADD back to the high address. BF is not set because there is no match. CKP is unaffected.

10. Slave clears SSP1IF.
11. Slave reads the received matching address from SSP1BUF clearing BF.
12. Slave loads high address into SSP1ADD.
13. Master clocks a data byte to the slave and clocks out the slaves $\overline{ACK}$ on the ninth SCL pulse; SSP1IF is set.
14. If SEN bit of SSP1CON2 is set, CKP is cleared by hardware and the clock is stretched.
15. Slave clears SSP1IF.
16. Slave reads the received byte from SSP1BUF clearing BF.
17. If SEN is set the slave sets CKP to release the SCL.
18. Steps 13-17 repeat for each received byte.
19. Master sends Stop to end the transmission.

25.5.5 10-BIT ADDRESSING WITH ADDRESS OR DATA HOLD

Reception using 10-bit addressing with AHEN or DHEN set is the same as with 7-bit modes. The only difference is the need to update the SSP1ADD register using the UA bit. All functionality, specifically when the CKP bit is cleared and SCL line is held low are the same. Figure 25-21 can be used as a reference of a slave in 10-bit addressing with AHEN set.

Figure 25-22 shows a standard waveform for a slave transmitter in 10-bit Addressing mode.

© 2010-2015 Microchip Technology Inc.

FIGURE 25-20: I²C SLAVE, 10-BIT ADDRESS, RECEPTION (SEN = 1, AHEN = 0, DHEN = 0)

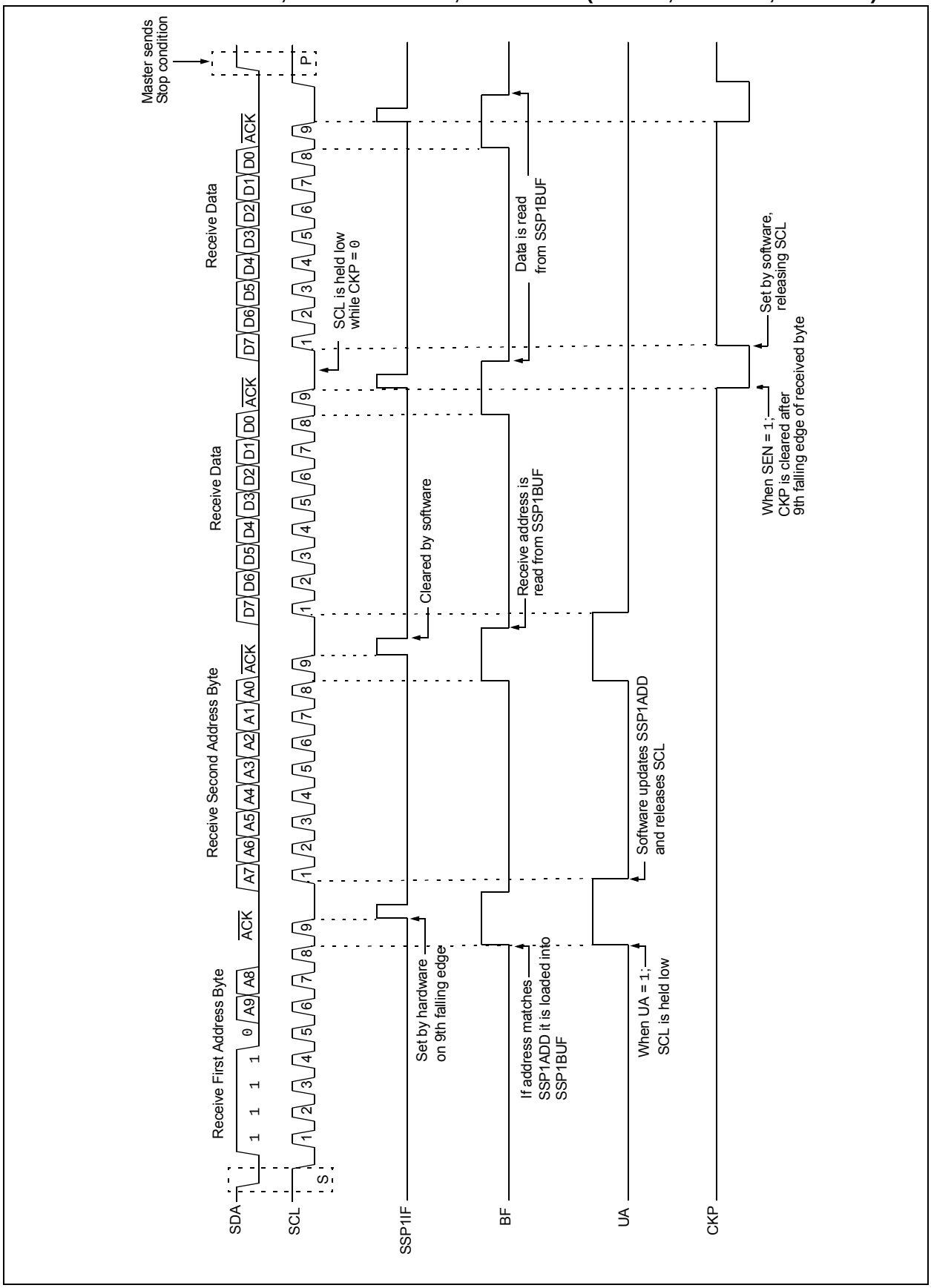

FIGURE 25-21: I²C SLAVE, 10-BIT ADDRESS, RECEPTION (SEN = 0, AHEN = 1, DHEN = 0)

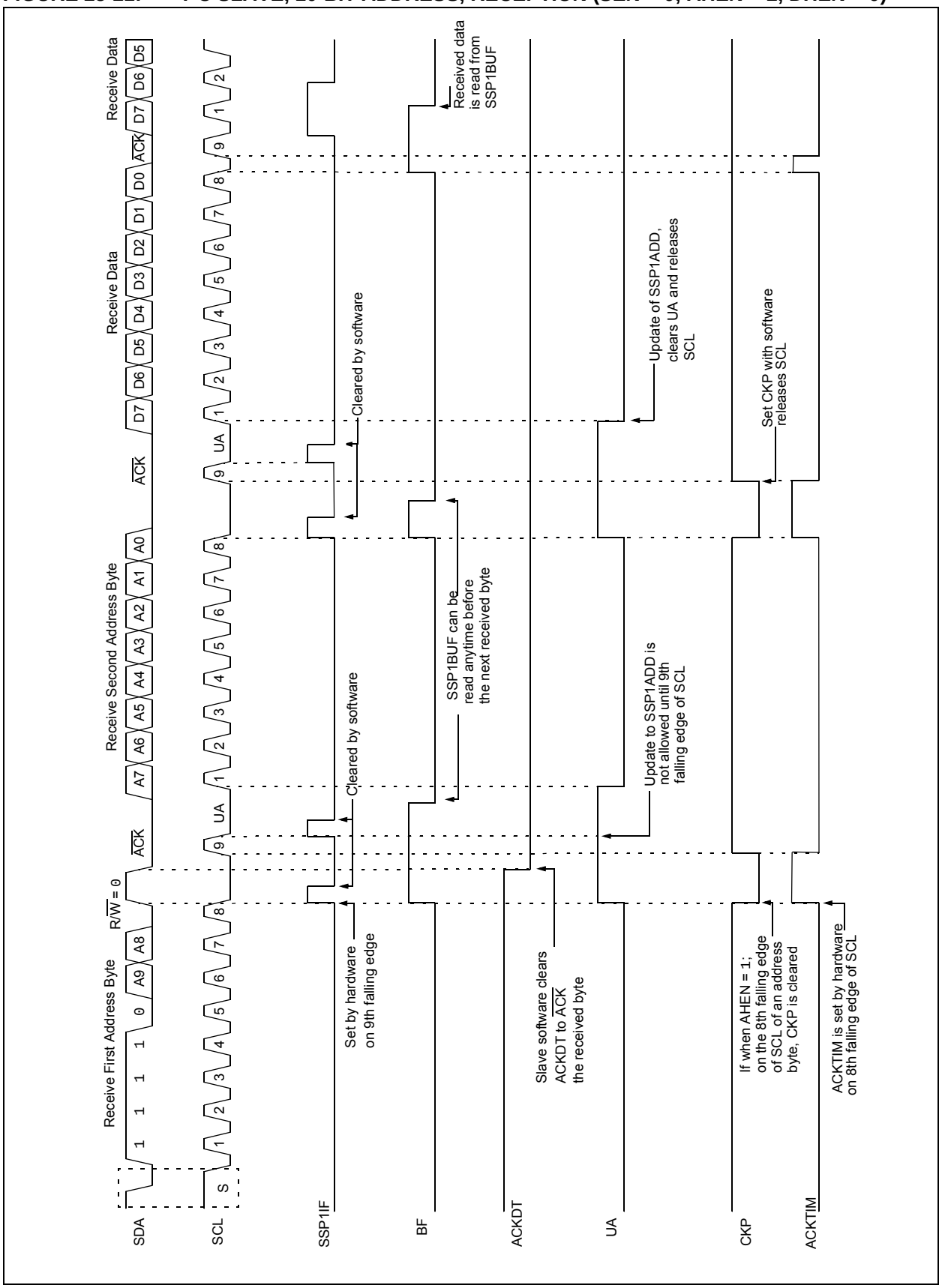

© 2010-2015 Microchip Technology Inc.

FIGURE 25-22: I²C SLAVE, 10-BIT ADDRESS, TRANSMISSION (SEN = 0, AHEN = 0, DHEN = 0)

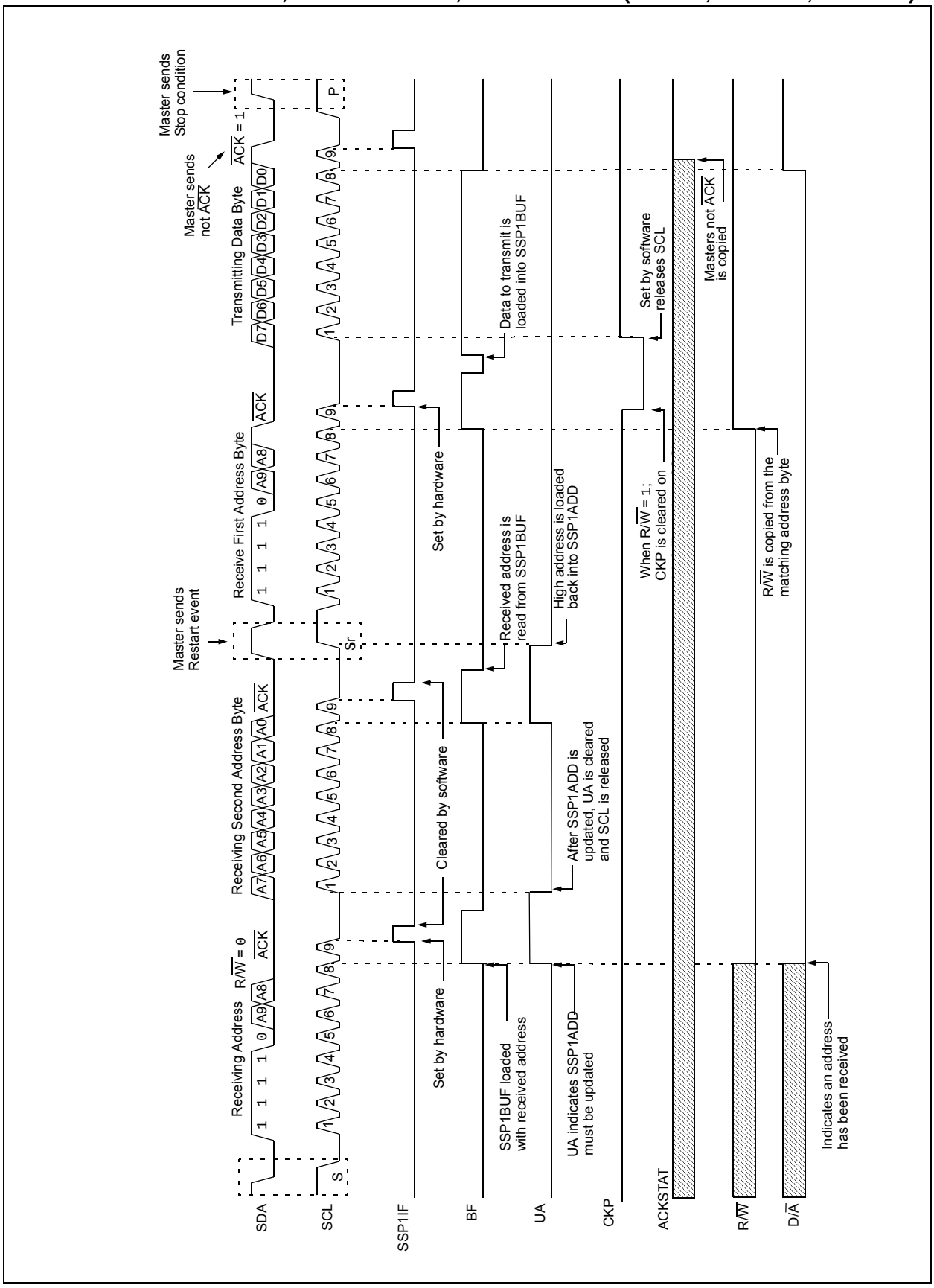

25.5.6 CLOCK STRETCHING

Clock stretching occurs when a device on the bus holds the SCL line low effectively pausing communication. The slave may stretch the clock to allow more time to handle data or prepare a response for the master device. A master device is not concerned with stretching as anytime it is active on the bus and not transferring data it is stretching. Any stretching done by a slave is invisible to the master software and handled by the hardware that generates SCL.

The CKP bit of the SSP1CON1 register is used to control stretching in software. Any time the CKP bit is cleared, the module will wait for the SCL line to go low and then hold it. Setting CKP will release SCL and allow more communication.

25.5.6.1 Normal Clock Stretching

Following an $\overline{ACK}$ if the R/$\overline{W}$ bit of SSP1STAT is set, a read request, the slave hardware will clear CKP. This allows the slave time to update SSP1BUF with data to transfer to the master. If the SEN bit of SSP1CON2 is set, the slave hardware will always stretch the clock after the $\overline{ACK}$ sequence. Once the slave is ready; CKP is set by software and communication resumes.

Note 1: The BF bit has no effect on if the clock will be stretched or not. This is different than previous versions of the module that would not stretch the clock, clear CKP, if SSP1BUF was read before the 9th falling edge of SCL.

2: Previous versions of the module did not stretch the clock for a transmission if SSP1BUF was loaded before the 9th falling edge of SCL. It is now always cleared for read requests.

25.5.6.2 10-bit Addressing Mode

In 10-bit Addressing mode, when the UA bit is set, the clock is always stretched. This is the only time the SCL is stretched without CKP being cleared. SCL is released immediately after a write to SSP1ADD.

Note: Previous versions of the module did not stretch the clock if the second address byte did not match.

25.5.6.3 Byte NACKing

When AHEN bit of SSP1CON3 is set; CKP is cleared by hardware after the eighth falling edge of SCL for a received matching address byte. When DHEN bit of SSP1CON3 is set; CKP is cleared after the eighth falling edge of SCL for received data.

Stretching after the eighth falling edge of SCL allows the slave to look at the received address or data and decide if it wants to ACK the received data.

25.5.7 CLOCK SYNCHRONIZATION AND THE CKP BIT

Any time the CKP bit is cleared, the module will wait for the SCL line to go low and then hold it. However, clearing the CKP bit will not assert the SCL output low until the SCL output is already sampled low. Therefore, the CKP bit will not assert the SCL line until an external I^2C master device has already asserted the SCL line. The SCL output will remain low until the CKP bit is set and all other devices on the I^2C bus have released SCL. This ensures that a write to the CKP bit will not violate the minimum high time requirement for SCL (see Figure 25-23).

FIGURE 25-23: CLOCK SYNCHRONIZATION TIMING

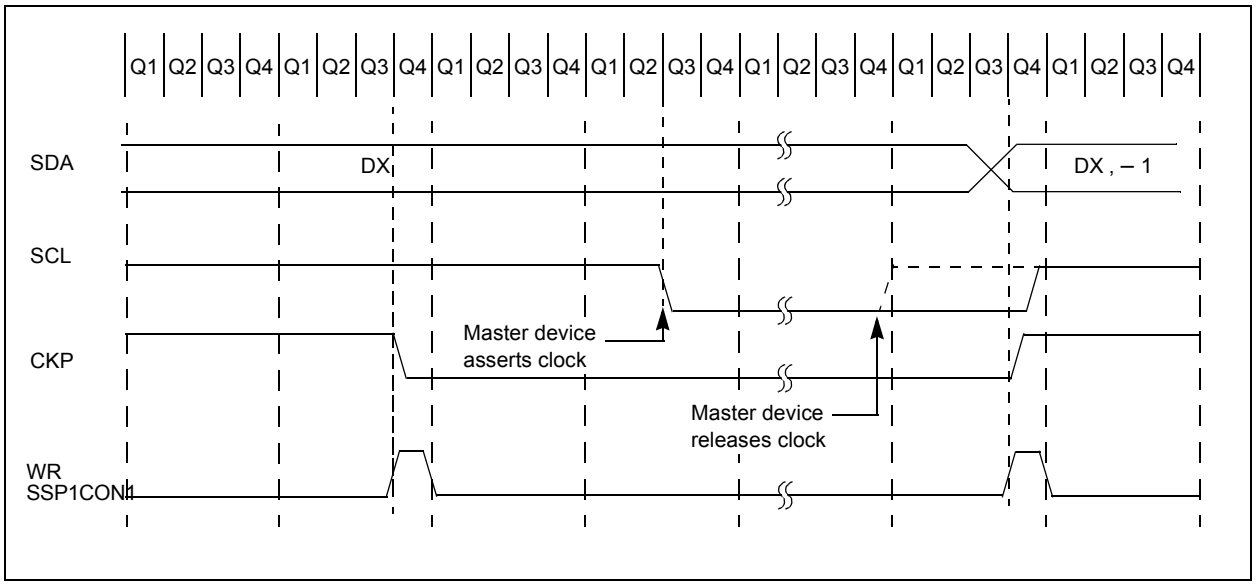

© 2010-2015 Microchip Technology Inc.

25.5.8 GENERAL CALL ADDRESS SUPPORT

The addressing procedure for the I^2C bus is such that the first byte after the Start condition usually determines which device will be the slave addressed by the master device. The exception is the general call address which can address all devices. When this address is used, all devices should, in theory, respond with an acknowledge.

The general call address is a reserved address in the I^2C protocol, defined as address 0x00. When the GCEN bit of the SSP1CON2 register is set, the slave module will automatically $\overline{ACK}$ the reception of this address regardless of the value stored in SSP1ADD. After the slave clocks in an address of all zeros with the R/$\overline{W}$ bit clear, an interrupt is generated and slave software can read SSP1BUF and respond. Figure 25-24 shows a general call reception sequence.

In 10-bit Address mode, the UA bit will not be set on the reception of the general call address. The slave will prepare to receive the second byte as data, just as it would in 7-bit mode.

If the AHEN bit of the SSP1CON3 register is set, just as with any other address reception, the slave hardware will stretch the clock after the eighth falling edge of SCL. The slave must then set its ACKDT value and release the clock with communication progressing as it would normally.

FIGURE 25-24: SLAVE MODE GENERAL CALL ADDRESS SEQUENCE

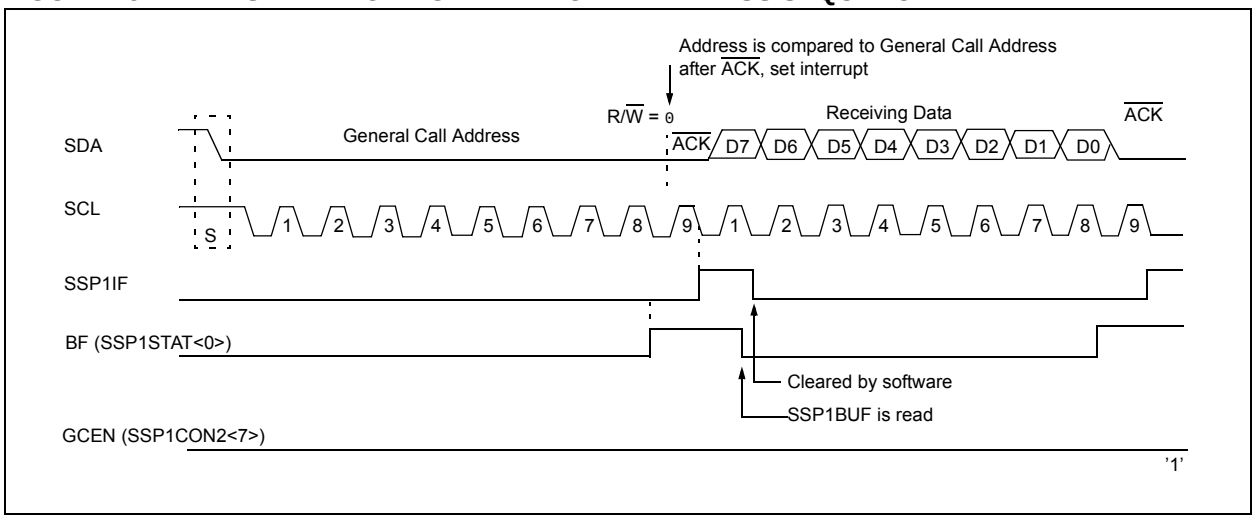

25.5.9 SSP1 MASK REGISTER

An SSP1 Mask (SSP1MSK) register (Register 25-5) is available in I^2C Slave mode as a mask for the value held in the SSP1SR register during an address comparison operation. A zero ('0') bit in the SSP1MSK register has the effect of making the corresponding bit of the received address a "don't care."

This register is reset to all '1's upon any Reset condition and, therefore, has no effect on standard SSP1 operation until written with a mask value.

The SSP1 Mask register is active during:

- 7-bit Address mode: address compare of A<7:1>.
- 10-bit Address mode: address compare of A<7:0> only. The SSP1 mask has no effect during the reception of the first (high) byte of the address.

25.6 I²C Master Mode

Master mode is enabled by setting and clearing the appropriate SSP1M bits in the SSP1CON1 register and by setting the SSP1EN bit. In Master mode, the SCL and SDA lines are set as inputs and are manipulated by the MSSP1 hardware.

Master mode of operation is supported by interrupt generation on the detection of the Start and Stop conditions. The Stop (P) and Start (S) bits are cleared from a Reset or when the MSSP1 module is disabled. Control of the I²C bus may be taken when the P bit is set, or the bus is Idle.

In Firmware Controlled Master mode, user code conducts all I²C bus operations based on Start and Stop bit condition detection. Start and Stop condition detection is the only active circuitry in this mode. All other communication is done by the user software directly manipulating the SDA and SCL lines.

The following events will cause the SSP1 Interrupt Flag bit, SSP1IF, to be set (SSP1 interrupt, if enabled):

- Start condition detected
- Stop condition detected
- Data transfer byte transmitted/received
- Acknowledge transmitted/received
- Repeated Start generated

Note 1: The MSSP1 module, when configured in I²C Master mode, does not allow queueing of events. For instance, the user is not allowed to initiate a Start condition and immediately write the SSP1BUF register to initiate transmission before the Start condition is complete. In this case, the SSP1BUF will not be written to and the WCOL bit will be set, indicating that a write to the SSP1BUF did not occur

2: When in Master mode, Start/Stop detection is masked and an interrupt is generated when the SEN/PEN bit is cleared and the generation is complete.

25.6.1 I²C MASTER MODE OPERATION

The master device generates all of the serial clock pulses and the Start and Stop conditions. A transfer is ended with a Stop condition or with a Repeated Start condition. Since the Repeated Start condition is also the beginning of the next serial transfer, the I²C bus will not be released.

In Master Transmitter mode, serial data is output through SDA, while SCL outputs the serial clock. The first byte transmitted contains the slave address of the receiving device (7 bits) and the Read/Write (R/$\overline{W}$) bit. In this case, the R/$\overline{W}$ bit will be logic '0'. Serial data is transmitted eight bits at a time. After each byte is transmitted, an Acknowledge bit is received. Start and Stop conditions are output to indicate the beginning and the end of a serial transfer.

In Master Receive mode, the first byte transmitted contains the slave address of the transmitting device (7 bits) and the R/$\overline{W}$ bit. In this case, the R/$\overline{W}$ bit will be logic '1'. Thus, the first byte transmitted is a 7-bit slave address followed by a '1' to indicate the receive bit. Serial data is received via SDA, while SCL outputs the serial clock. Serial data is received eight bits at a time. After each byte is received, an Acknowledge bit is transmitted. Start and Stop conditions indicate the beginning and end of transmission.

A Baud Rate Generator is used to set the clock frequency output on SCL. See **Section 25.7 "Baud Rate Generator"** for more detail.

© 2010-2015 Microchip Technology Inc.

25.6.2 CLOCK ARBITRATION

Clock arbitration occurs when the master, during any receive, transmit or Repeated Start/Stop condition, releases the SCL pin (SCL allowed to float high). When the SCL pin is allowed to float high, the Baud Rate Generator (BRG) is suspended from counting until the SCL pin is actually sampled high. When the SCL pin is sampled high, the Baud Rate Generator is reloaded with the contents of SSP1ADD<7:0> and begins counting. This ensures that the SCL high time will always be at least one BRG rollover count in the event that the clock is held low by an external device (Figure 25-25).

FIGURE 25-25: BAUD RATE GENERATOR TIMING WITH CLOCK ARBITRATION

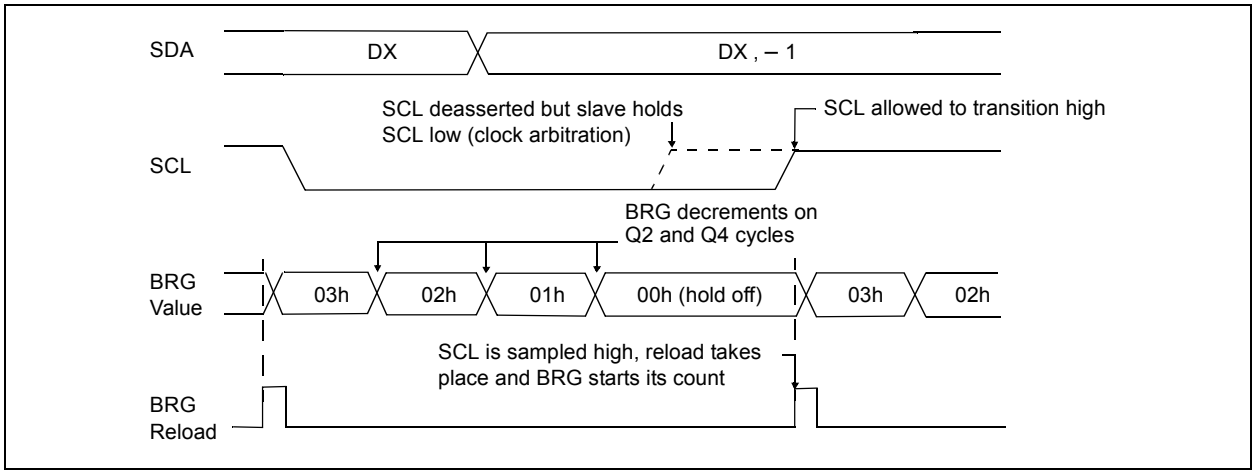

25.6.3 WCOL STATUS FLAG

If the user writes the SSP1BUF when a Start, Restart, Stop, Receive or Transmit sequence is in progress, the WCOL is set and the contents of the buffer are unchanged (the write does not occur). Any time the WCOL bit is set it indicates that an action on SSP1BUF was attempted while the module was not Idle.

Note:	Because queuing of events is not allowed, writing to the lower five bits of SSP1CON2 is disabled until the Start condition is complete.

25.6.4 I²C MASTER MODE START CONDITION TIMING

To initiate a Start condition, the user sets the Start Enable bit, SEN bit of the SSP1CON2 register. If the SDA and SCL pins are sampled high, the Baud Rate Generator is reloaded with the contents of SSP1ADD<7:0> and starts its count. If SCL and SDA are both sampled high when the Baud Rate Generator times out (TBRG), the SDA pin is driven low. The action of the SDA being driven low while SCL is high is the Start condition and causes the S bit of the SSP1STAT1 register to be set. Following this, the Baud Rate Generator is reloaded with the contents of SSP1ADD<7:0> and resumes its count. When the Baud Rate Generator times out (TBRG), the SEN bit of the SSP1CON2 register will be automatically cleared by hardware; the Baud Rate Generator is suspended, leaving the SDA line held low and the Start condition is complete.

Note 1: If at the beginning of the Start condition, the SDA and SCL pins are already sampled low, or if during the Start condition, the SCL line is sampled low before the SDA line is driven low, a bus collision occurs, the Bus Collision Interrupt Flag, BCL1IF, is set, the Start condition is aborted and the I²C module is reset into its Idle state.

2: The Philips I²C Specification states that a bus collision cannot occur on a Start.

FIGURE 25-26: FIRST START BIT TIMING

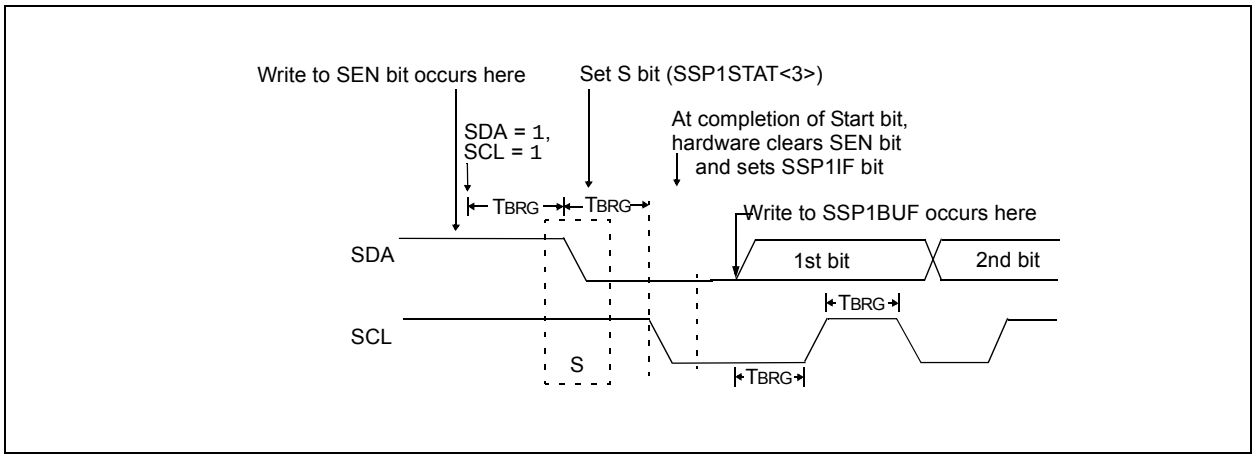

© 2010-2015 Microchip Technology Inc.

25.6.5 I²C MASTER MODE REPEATED START CONDITION TIMING

A Repeated Start condition occurs when the RSEN bit of the SSP1CON2 register is programmed high and the Master state machine is no longer active. When the RSEN bit is set, the SCL pin is asserted low. When the SCL pin is sampled low, the Baud Rate Generator is loaded and begins counting. The SDA pin is released (brought high) for one Baud Rate Generator count (TBRG). When the Baud Rate Generator times out, if SDA is sampled high, the SCL pin will be deasserted (brought high). When SCL is sampled high, the Baud Rate Generator is reloaded and begins counting. SDA and SCL must be sampled high for one TBRG. This action is then followed by assertion of the SDA pin (SDA = 0) for one TBRG while SCL is high. SCL is asserted low. Following this, the RSEN bit of the SSP1CON2 register will be automatically cleared and the Baud Rate Generator will not be reloaded, leaving the SDA pin held low. As soon as a Start condition is detected on the SDA and SCL pins, the S bit of the SSP1STAT register will be set. The SSP1IF bit will not be set until the Baud Rate Generator has timed out.

Note 1: If RSEN is programmed while any other event is in progress, it will not take effect.

2: A bus collision during the Repeated Start condition occurs if:

- SDA is sampled low when SCL goes from low-to-high.
- SCL goes low before SDA is asserted low. This may indicate that another master is attempting to transmit a data '1'.

FIGURE 25-27: REPEAT START CONDITION WAVEFORM

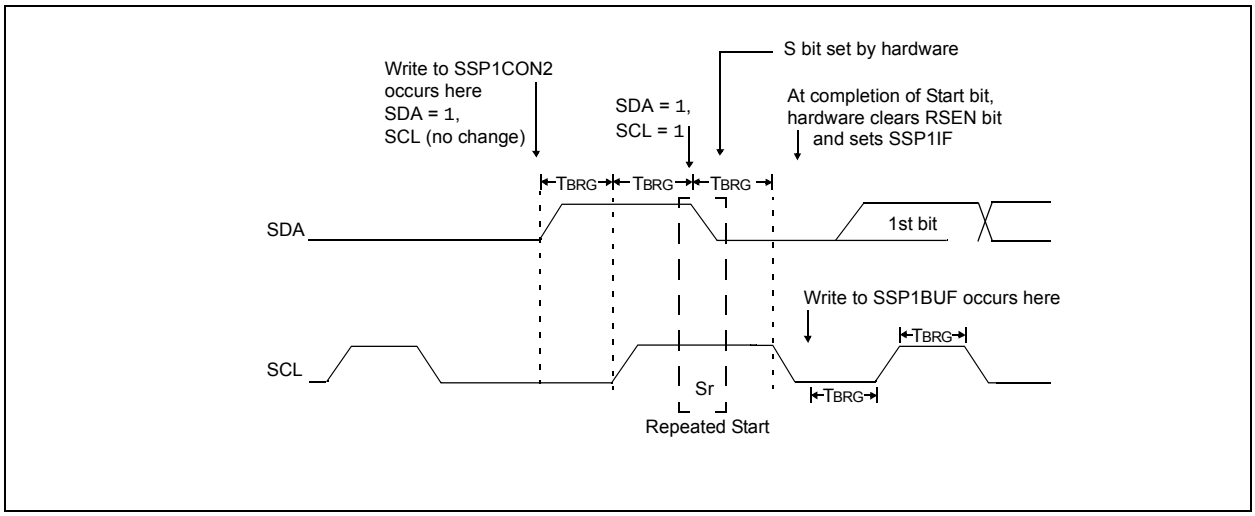

25.6.6 I²C MASTER MODE TRANSMISSION

Transmission of a data byte, a 7-bit address or the other half of a 10-bit address is accomplished by simply writing a value to the SSP1BUF register. This action will set the Buffer Full flag bit, BF and allow the Baud Rate Generator to begin counting and start the next transmission. Each bit of address/data will be shifted out onto the SDA pin after the falling edge of SCL is asserted. SCL is held low for one Baud Rate Generator rollover count (TBRG). Data should be valid before SCL is released high. When the SCL pin is released high, it is held that way for TBRG. The data on the SDA pin must remain stable for that duration and some hold time after the next falling edge of SCL. After the eighth bit is shifted out (the falling edge of the eighth clock), the BF flag is cleared and the master releases SDA. This allows the slave device being addressed to respond with an $\overline{ACK}$ bit during the ninth bit time if an address match occurred, or if data was received properly. The status of $\overline{ACK}$ is written into the ACKSTAT bit on the rising edge of the ninth clock. If the master receives an Acknowledge, the Acknowledge Status bit, ACKSTAT, is cleared. If not, the bit is set. After the ninth clock, the SSP1IF bit is set and the master clock (Baud Rate Generator) is suspended until the next data byte is loaded into the SSP1BUF, leaving SCL low and SDA unchanged (Figure 25-28).

After the write to the SSP1BUF, each bit of the address will be shifted out on the falling edge of SCL until all seven address bits and the R/$\overline{W}$ bit are completed. On the falling edge of the eighth clock, the master will release the SDA pin, allowing the slave to respond with an Acknowledge. On the falling edge of the ninth clock, the master will sample the SDA pin to see if the address was recognized by a slave. The status of the $\overline{ACK}$ bit is loaded into the ACKSTAT Status bit of the SSP1CON2 register. Following the falling edge of the ninth clock transmission of the address, the SSP1IF is set, the BF flag is cleared and the Baud Rate Generator is turned off until another write to the SSP1BUF takes place, holding SCL low and allowing SDA to float.

25.6.6.1 BF Status Flag

In Transmit mode, the BF bit of the SSP1STAT register is set when the CPU writes to SSP1BUF and is cleared when all eight bits are shifted out.

25.6.6.2 WCOL Status Flag

If the user writes the SSP1BUF when a transmit is already in progress (i.e., SSP1SR is still shifting out a data byte), the WCOL bit is set and the contents of the buffer are unchanged (the write does not occur).

WCOL must be cleared by software before the next transmission.

25.6.6.3 ACKSTAT Status Flag

In Transmit mode, the ACKSTAT bit of the SSP1CON2 register is cleared when the slave has sent an Acknowledge ($\overline{ACK}$ = 0) and is set when the slave does not Acknowledge ($\overline{ACK}$ = 1). A slave sends an Acknowledge when it has recognized its address (including a general call), or when the slave has properly received its data.

25.6.6.4 Typical Transmit Sequence:

1. The user generates a Start condition by setting the SEN bit of the SSP1CON2 register.
2. SSP1IF is set by hardware on completion of the Start.
3. SSP1IF is cleared by software.
4. The MSSP1 module will wait the required start time before any other operation takes place.
5. The user loads the SSP1BUF with the slave address to transmit.
6. Address is shifted out the SDA pin until all eight bits are transmitted. Transmission begins as soon as SSP1BUF is written to.
7. The MSSP1 module shifts in the $\overline{ACK}$ bit from the slave device and writes its value into the ACKSTAT bit of the SSP1CON2 register.
8. The MSSP1 module generates an interrupt at the end of the ninth clock cycle by setting the SSP1IF bit.
9. The user loads the SSP1BUF with eight bits of data.
10. Data is shifted out the SDA pin until all eight bits are transmitted.
11. The MSSP1 module shifts in the $\overline{ACK}$ bit from the slave device and writes its value into the ACKSTAT bit of the SSP1CON2 register.
12. Steps 8-11 are repeated for all transmitted data bytes.
13. The user generates a Stop or Restart condition by setting the PEN or RSEN bits of the SSP1CON2 register. Interrupt is generated once the Stop/Restart condition is complete.

© 2010-2015 Microchip Technology Inc.

FIGURE 25-28: I²C MASTER MODE WAVEFORM (TRANSMISSION, 7 OR 10-BIT ADDRESS)

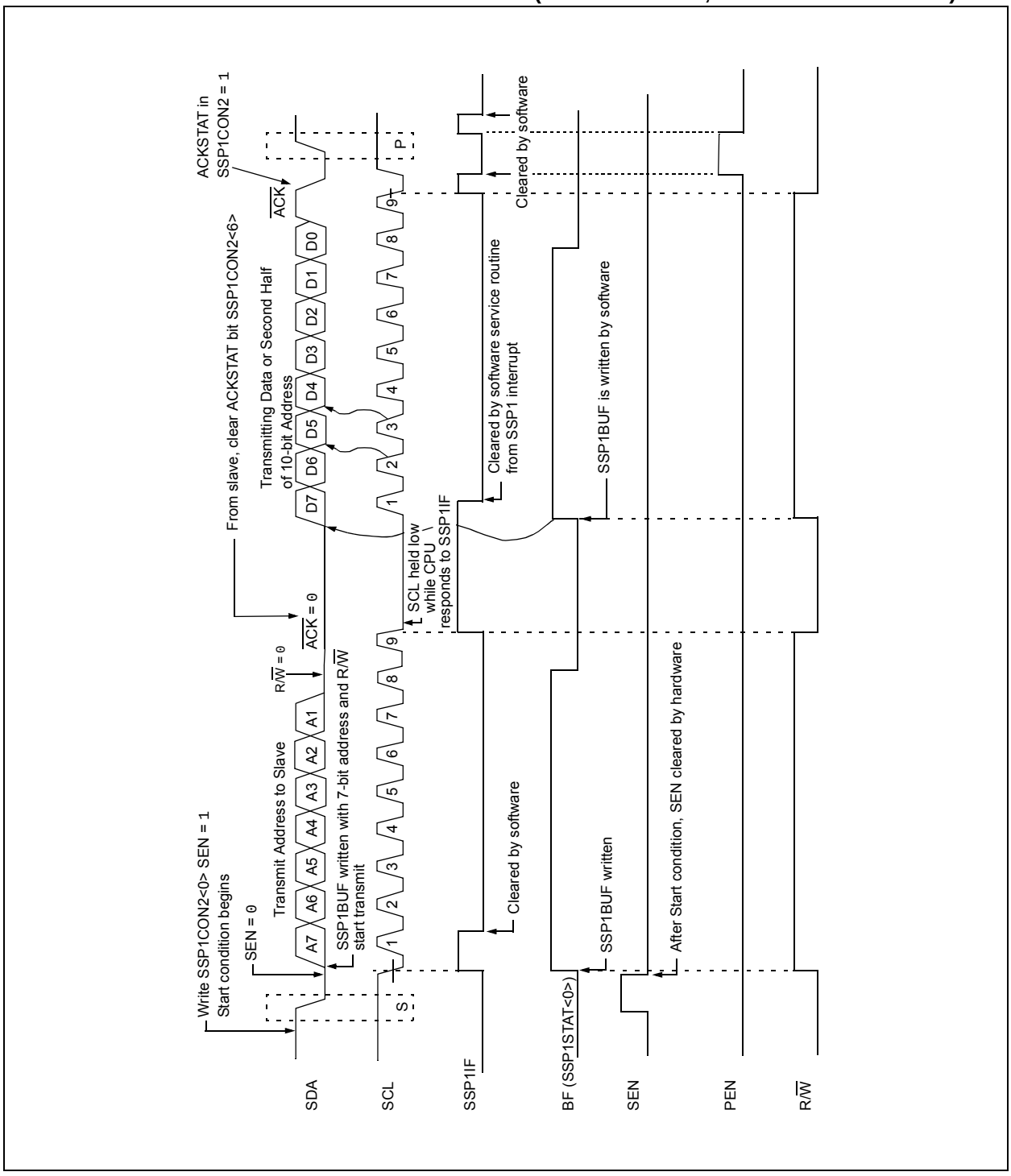

25.6.7 I²C MASTER MODE RECEPTION

Master mode reception is enabled by programming the Receive Enable bit, RCEN bit of the SSP1CON2 register.

Note:	The MSSP1 module must be in an Idle state before the RCEN bit is set or the RCEN bit will be disregarded.

The Baud Rate Generator begins counting and on each rollover, the state of the SCL pin changes (high-to-low/low-to-high) and data is shifted into the SSP1SR. After the falling edge of the eighth clock, the receive enable flag is automatically cleared, the contents of the SSP1SR are loaded into the SSP1BUF, the BF flag bit is set, the SSP1IF flag bit is set and the Baud Rate Generator is suspended from counting, holding SCL low. The MSSP1 is now in Idle state awaiting the next command. When the buffer is read by the CPU, the BF flag bit is automatically cleared. The user can then send an Acknowledge bit at the end of reception by setting the Acknowledge Sequence Enable, ACKEN bit of the SSP1CON2 register.

25.6.7.1 BF Status Flag

In receive operation, the BF bit is set when an address or data byte is loaded into SSP1BUF from SSP1SR. It is cleared when the SSP1BUF register is read.

25.6.7.2 SSPOV Status Flag

In receive operation, the SSPOV bit is set when eight bits are received into the SSP1SR and the BF flag bit is already set from a previous reception.

25.6.7.3 WCOL Status Flag

If the user writes the SSP1BUF when a receive is already in progress (i.e., SSP1SR is still shifting in a data byte), the WCOL bit is set and the contents of the buffer are unchanged (the write does not occur).

25.6.7.4 Typical Receive Sequence:

1. The user generates a Start condition by setting the SEN bit of the SSP1CON2 register.
2. SSP1IF is set by hardware on completion of the Start.
3. SSP1IF is cleared by software.
4. User writes SSP1BUF with the slave address to transmit and the R/$\overline{W}$ bit set.
5. Address is shifted out the SDA pin until all eight bits are transmitted. Transmission begins as soon as SSP1BUF is written to.
6. The MSSP1 module shifts in the $\overline{ACK}$ bit from the slave device and writes its value into the ACKSTAT bit of the SSP1CON2 register.
7. The MSSP1 module generates an interrupt at the end of the ninth clock cycle by setting the SSP1IF bit.
8. User sets the RCEN bit of the SSP1CON2 register and the master clocks in a byte from the slave.
9. After the eighth falling edge of SCL, SSP1IF and BF are set.
10. Master clears SSP1IF and reads the received byte from SSP1UF, clears BF.
11. Master sets $\overline{ACK}$ value sent to slave in ACKDT bit of the SSP1CON2 register and initiates the $\overline{ACK}$ by setting the ACKEN bit.
12. Masters $\overline{ACK}$ is clocked out to the slave and SSP1IF is set.
13. User clears SSP1IF.
14. Steps 8-13 are repeated for each received byte from the slave.
15. Master sends a not $\overline{ACK}$ or Stop to end communication.

© 2010-2015 Microchip Technology Inc.

FIGURE 25-29: I²C MASTER MODE WAVEFORM (RECEPTION, 7-BIT ADDRESS)

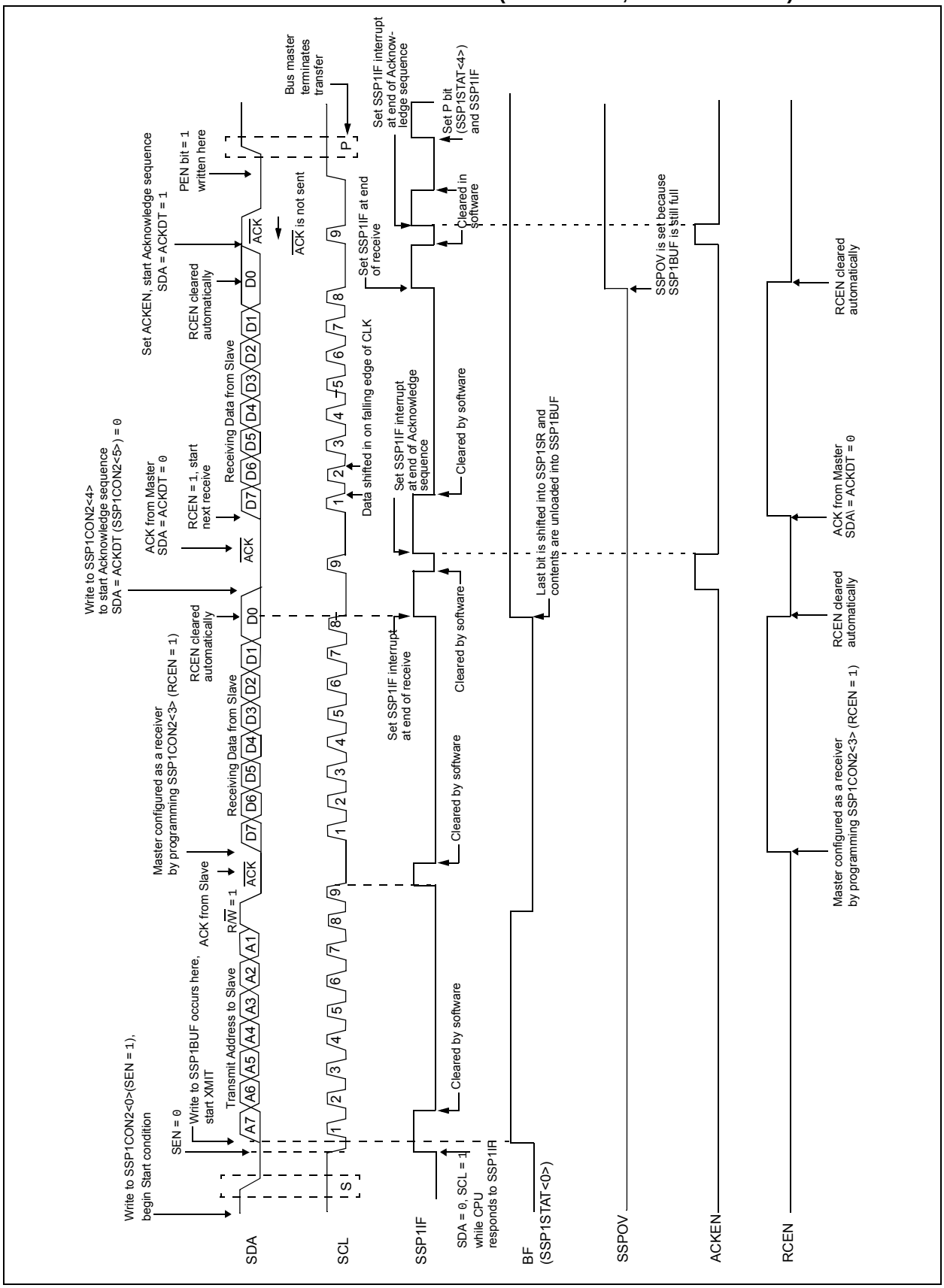

25.6.8 ACKNOWLEDGE SEQUENCE TIMING

An Acknowledge sequence is enabled by setting the Acknowledge Sequence Enable bit, ACKEN bit of the SSP1CON2 register. When this bit is set, the SCL pin is pulled low and the contents of the Acknowledge data bit are presented on the SDA pin. If the user wishes to generate an Acknowledge, then the ACKDT bit should be cleared. If not, the user should set the ACKDT bit before starting an Acknowledge sequence. The Baud Rate Generator then counts for one rollover period (TBRG) and the SCL pin is deasserted (pulled high). When the SCL pin is sampled high (clock arbitration), the Baud Rate Generator counts for TBRG. The SCL pin is then pulled low. Following this, the ACKEN bit is automatically cleared, the Baud Rate Generator is turned off and the MSSP1 module then goes into Idle mode (Figure 25-30).

25.6.8.1 WCOL Status Flag

If the user writes the SSP1BUF when an Acknowledge sequence is in progress, then the WCOL bit is set and the contents of the buffer are unchanged (the write does not occur).

25.6.9 STOP CONDITION TIMING

A Stop bit is asserted on the SDA pin at the end of a receive/transmit by setting the Stop Sequence Enable bit, PEN bit of the SSP1CON2 register. At the end of a receive/transmit, the SCL line is held low after the falling edge of the ninth clock. When the PEN bit is set, the master will assert the SDA line low. When the SDA line is sampled low, the Baud Rate Generator is reloaded and counts down to '0'. When the Baud Rate Generator times out, the SCL pin will be brought high and one TBRG (Baud Rate Generator rollover count) later, the SDA pin will be deasserted. When the SDA pin is sampled high while SCL is high, the P bit of the SSP1STAT register is set. A TBRG later, the PEN bit is cleared and the SSP1IF bit is set (Figure 25-31).

25.6.9.1 WCOL Status Flag

If the user writes the SSP1BUF when a Stop sequence is in progress, then the WCOL bit is set and the contents of the buffer are unchanged (the write does not occur).

FIGURE 25-30: ACKNOWLEDGE SEQUENCE WAVEFORM

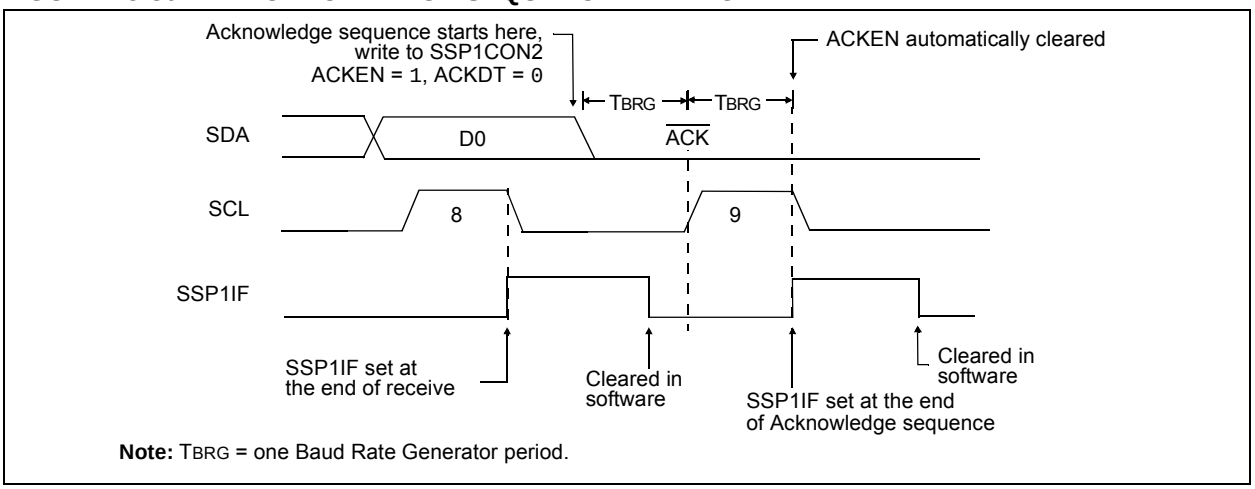

Note: TBRG = one Baud Rate Generator period.

© 2010-2015 Microchip Technology Inc.

FIGURE 25-31: STOP CONDITION RECEIVE OR TRANSMIT MODE

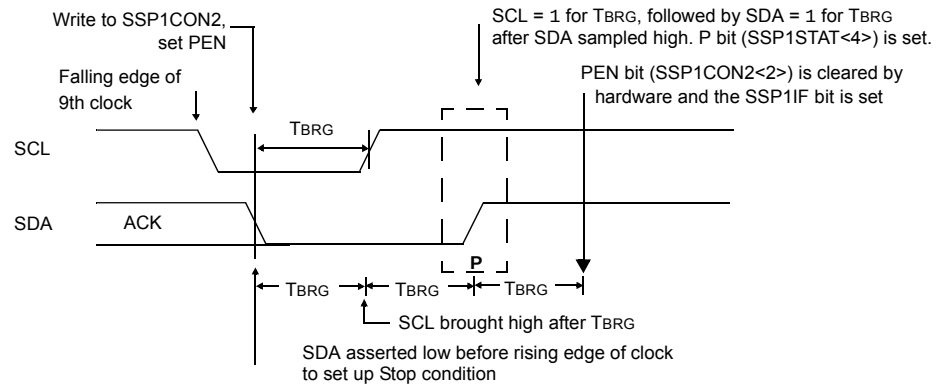

Note: TBRG = one Baud Rate Generator period.

25.6.10 SLEEP OPERATION

While in Sleep mode, the I^{2}C slave module can receive addresses or data and when an address match or complete byte transfer occurs, wake the processor from Sleep (if the MSSP1 interrupt is enabled).

25.6.11 EFFECTS OF A RESET

A Reset disables the MSSP1 module and terminates the current transfer.

25.6.12 MULTI-MASTER MODE

In Multi-Master mode, the interrupt generation on the detection of the Start and Stop conditions allows the determination of when the bus is free. The Stop (P) and Start (S) bits are cleared from a Reset or when the MSSP1 module is disabled. Control of the I^{2}C bus may be taken when the P bit of the SSP1STAT register is set, or the bus is Idle, with both the S and P bits clear. When the bus is busy, enabling the SSP interrupt will generate the interrupt when the Stop condition occurs.

In multi-master operation, the SDA line must be monitored for arbitration to see if the signal level is the expected output level. This check is performed by hardware with the result placed in the BCL1IF bit.

The states where arbitration can be lost are:

- Address Transfer
- Data Transfer
- A Start Condition
- A Repeated Start Condition
- An Acknowledge Condition

25.6.13 MULTI -MASTER COMMUNICATION, BUS COLLISION AND BUS ARBITRATION

Multi-Master mode support is achieved by bus arbitration. When the master outputs address/data bits onto the SDA pin, arbitration takes place when the master outputs a '1' on SDA, by letting SDA float high and another master asserts a '0'. When the SCL pin floats high, data should be stable. If the expected data on SDA is a '1' and the data sampled on the SDA pin is '0', then a bus collision has taken place. The master will set the Bus Collision Interrupt Flag, BCL1IF and reset the I^{2}C port to its Idle state (Figure 25-32).

If a transmit was in progress when the bus collision occurred, the transmission is halted, the BF flag is cleared, the SDA and SCL lines are deasserted and the SSP1BUF can be written to. When the user services the bus collision Interrupt Service Routine and if the I^{2}C bus is free, the user can resume communication by asserting a Start condition.

If a Start, Repeated Start, Stop or Acknowledge condition was in progress when the bus collision occurred, the condition is aborted, the SDA and SCL lines are deasserted and the respective control bits in the SSP1CON2 register are cleared. When the user services the bus collision Interrupt Service Routine and if the I^{2}C bus is free, the user can resume communication by asserting a Start condition.

The master will continue to monitor the SDA and SCL pins. If a Stop condition occurs, the SSP1IF bit will be set.

A write to the SSP1BUF will start the transmission of data at the first data bit, regardless of where the transmitter left off when the bus collision occurred.

In Multi-Master mode, the interrupt generation on the detection of Start and Stop conditions allows the determination of when the bus is free. Control of the I^{2}C bus can be taken when the P bit is set in the SSP1STAT register, or the bus is Idle and the S and P bits are cleared.

FIGURE 25-32: BUS COLLISION TIMING FOR TRANSMIT AND ACKNOWLEDGE

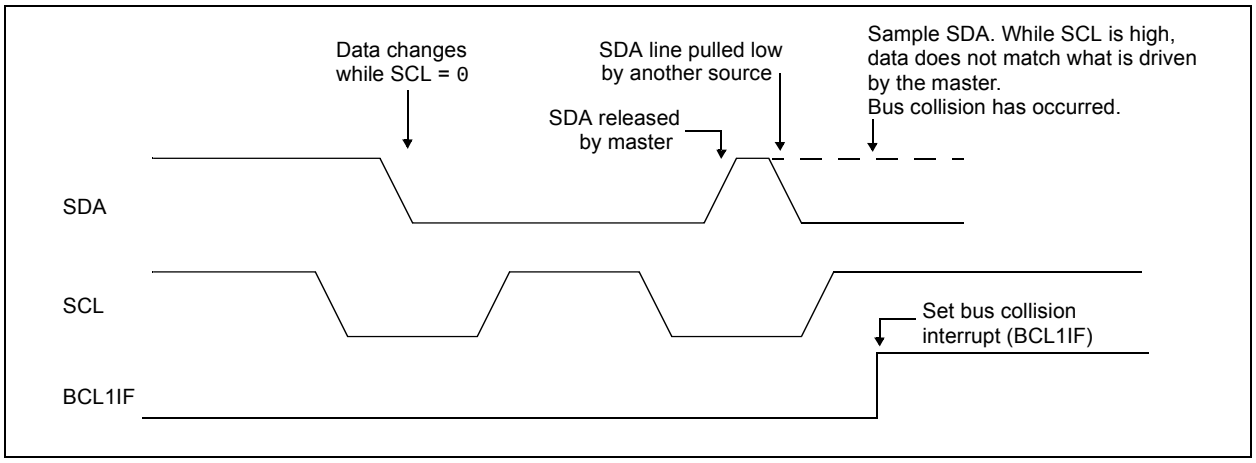

25.6.13.1 Bus Collision During a Start Condition

During a Start condition, a bus collision occurs if:

a) SDA or SCL are sampled low at the beginning of the Start condition (Figure 25-33).

b) SCL is sampled low before SDA is asserted low (Figure 25-34).

During a Start condition, both the SDA and the SCL pins are monitored.

If the SDA pin is already low, or the SCL pin is already low, then all of the following occur:

- the Start condition is aborted,
- the BCL1IF flag is set and
- the MSSP1 module is reset to its Idle state (Figure 25-33).

The Start condition begins with the SDA and SCL pins deasserted. When the SDA pin is sampled high, the Baud Rate Generator is loaded and counts down. If the SCL pin is sampled low while SDA is high, a bus collision occurs because it is assumed that another master is attempting to drive a data '1' during the Start condition.

If the SDA pin is sampled low during this count, the BRG is reset and the SDA line is asserted early (Figure 25-35). If, however, a '1' is sampled on the SDA pin, the SDA pin is asserted low at the end of the BRG count. The Baud Rate Generator is then reloaded and counts down to zero; if the SCL pin is sampled as '0' during this time, a bus collision does not occur. At the end of the BRG count, the SCL pin is asserted low.

Note: The reason that bus collision is not a factor during a Start condition is that no two bus masters can assert a Start condition at the exact same time. Therefore, one master will always assert SDA before the other. This condition does not cause a bus collision because the two masters must be allowed to arbitrate the first address following the Start condition. If the address is the same, arbitration must be allowed to continue into the data portion, Repeated Start or Stop conditions.

© 2010-2015 Microchip Technology Inc.

FIGURE 25-33: BUS COLLISION DURING START CONDITION (SDA ONLY)

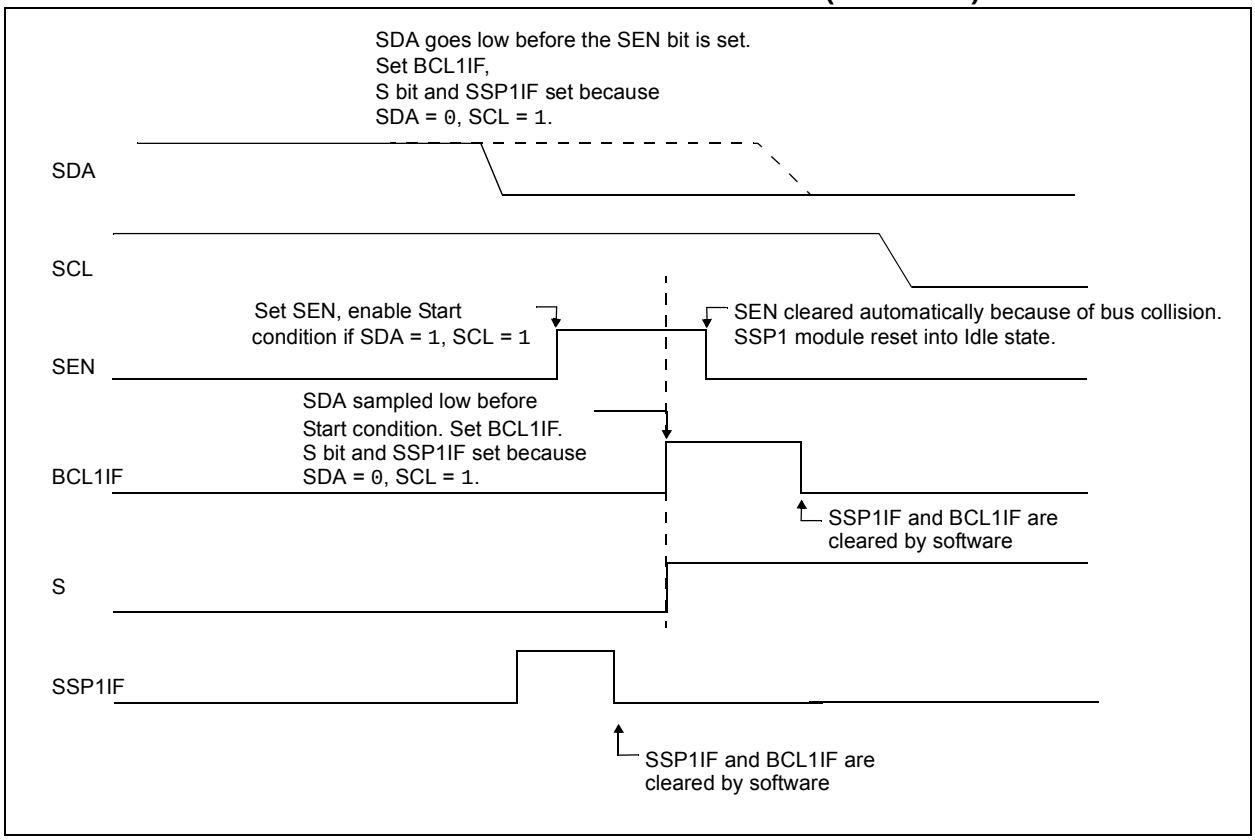

FIGURE 25-34: BUS COLLISION DURING START CONDITION (SCL = 0)

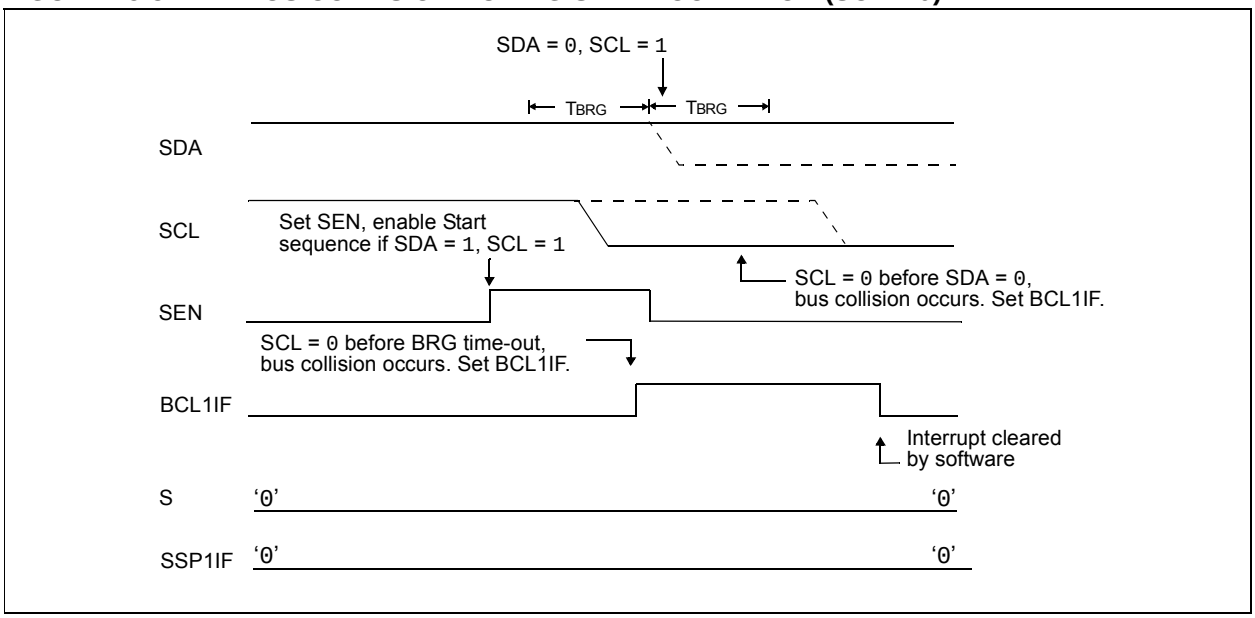

FIGURE 25-35: BRG RESET DUE TO SDA ARBITRATION DURING START CONDITION

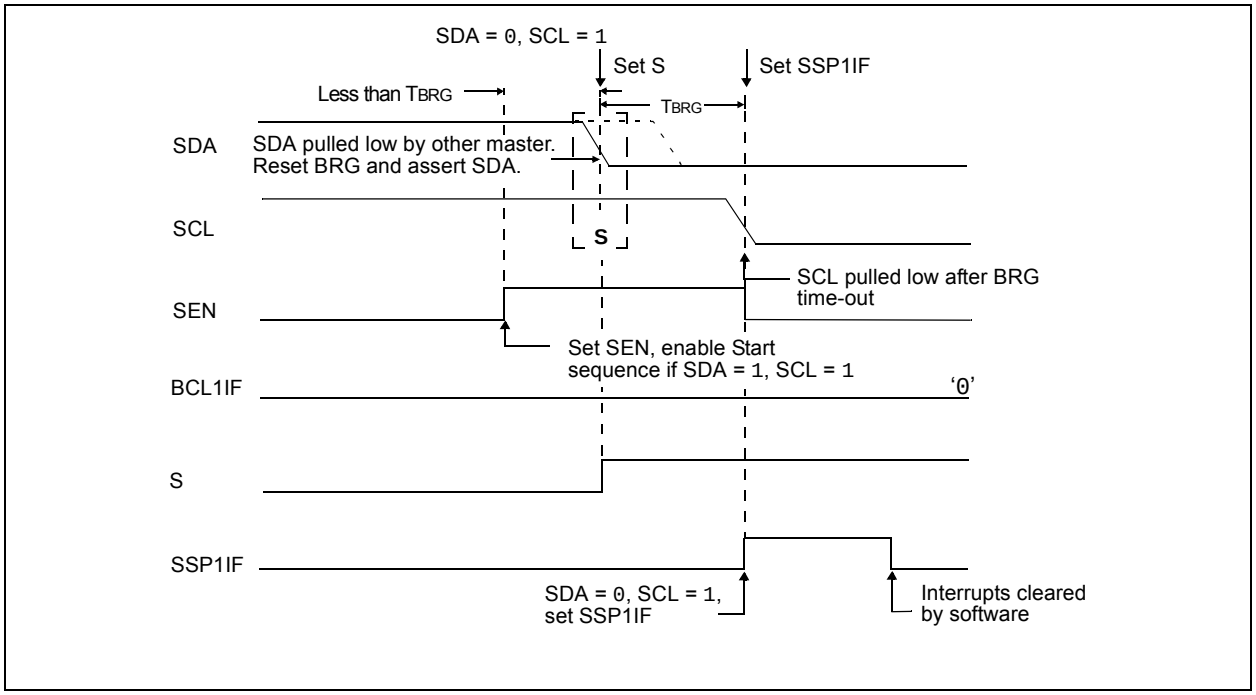

25.6.13.2 Bus Collision During a Repeated Start Condition

During a Repeated Start condition, a bus collision occurs if:

a) A low level is sampled on SDA when SCL goes from low level to high level.

b) SCL goes low before SDA is asserted low, indicating that another master is attempting to transmit a data '1'.

When the user releases SDA and the pin is allowed to float high, the BRG is loaded with SSP1ADD and counts down to zero. The SCL pin is then deasserted and when sampled high, the SDA pin is sampled.

If SDA is low, a bus collision has occurred (i.e., another master is attempting to transmit a data '0', Figure 25-36). If SDA is sampled high, the BRG is reloaded and begins counting. If SDA goes from high-to-low before the BRG times out, no bus collision occurs because no two masters can assert SDA at exactly the same time.

If SCL goes from high-to-low before the BRG times out and SDA has not already been asserted, a bus collision occurs. In this case, another master is attempting to transmit a data '1' during the Repeated Start condition, see Figure 25-37.

If, at the end of the BRG time-out, both SCL and SDA are still high, the SDA pin is driven low and the BRG is reloaded and begins counting. At the end of the count, regardless of the status of the SCL pin, the SCL pin is driven low and the Repeated Start condition is complete.

© 2010-2015 Microchip Technology Inc.

FIGURE 25-36: BUS COLLISION DURING A REPEATED START CONDITION (CASE 1)

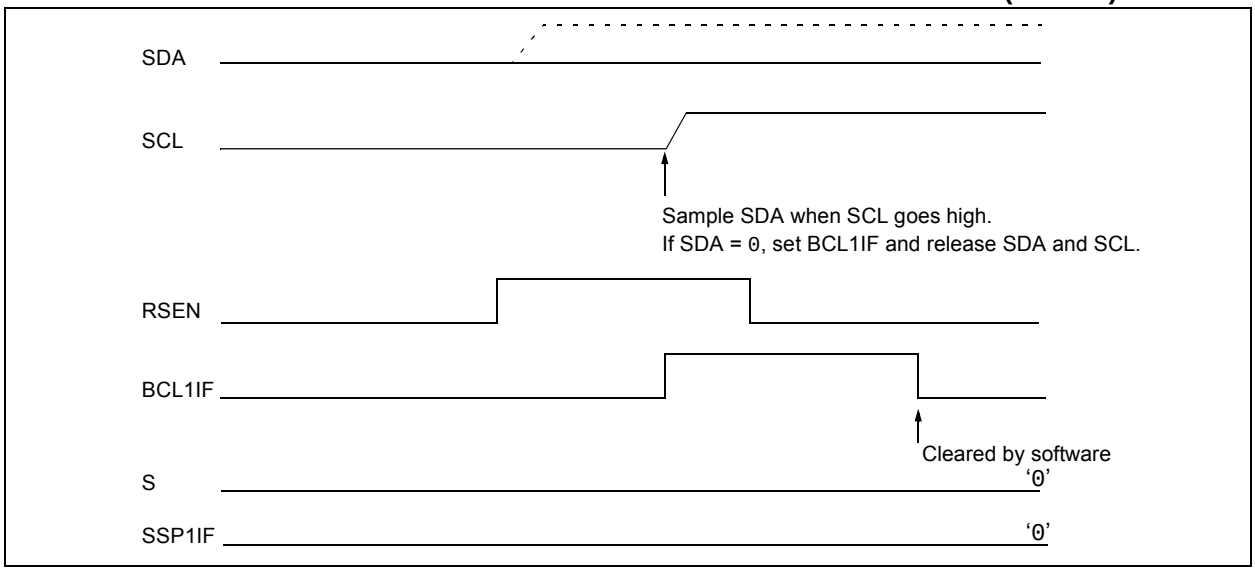

FIGURE 25-37: BUS COLLISION DURING REPEATED START CONDITION (CASE 2)

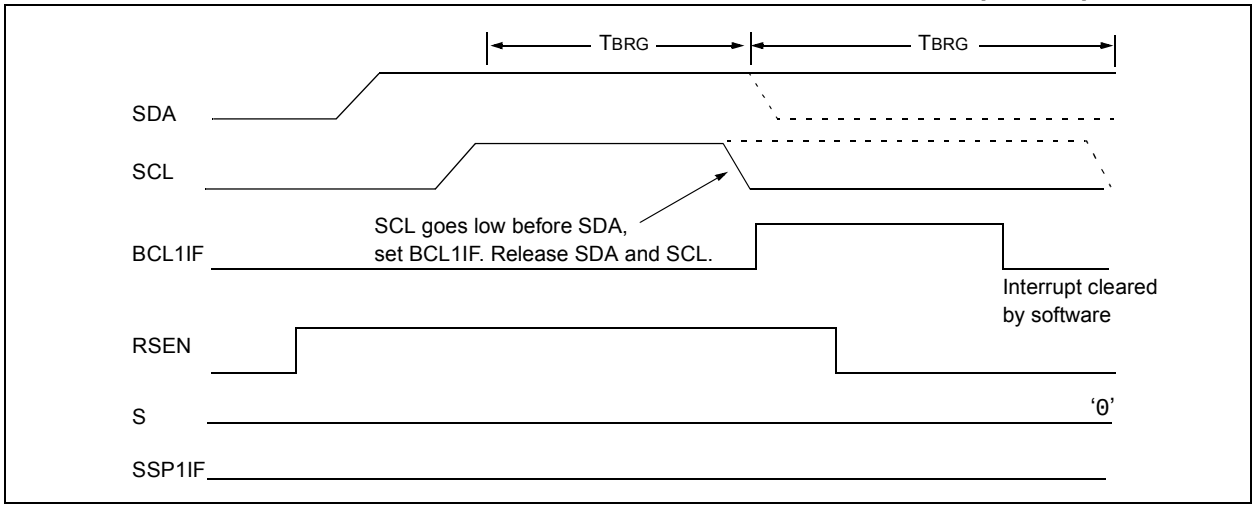

25.6.13.3 Bus Collision During a Stop Condition

Bus collision occurs during a Stop condition if:

a) After the SDA pin has been deasserted and allowed to float high, SDA is sampled low after the BRG has timed out.

b) After the SCL pin is deasserted, SCL is sampled low before SDA goes high.

The Stop condition begins with SDA asserted low. When SDA is sampled low, the SCL pin is allowed to float. When the pin is sampled high (clock arbitration), the Baud Rate Generator is loaded with SSP1ADD and counts down to 0. After the BRG times out, SDA is sampled. If SDA is sampled low, a bus collision has occurred. This is due to another master attempting to drive a data '0' (Figure 25-38). If the SCL pin is sampled low before SDA is allowed to float high, a bus collision occurs. This is another case of another master attempting to drive a data '0' (Figure 25-39).

FIGURE 25-38: BUS COLLISION DURING A STOP CONDITION (CASE 1)

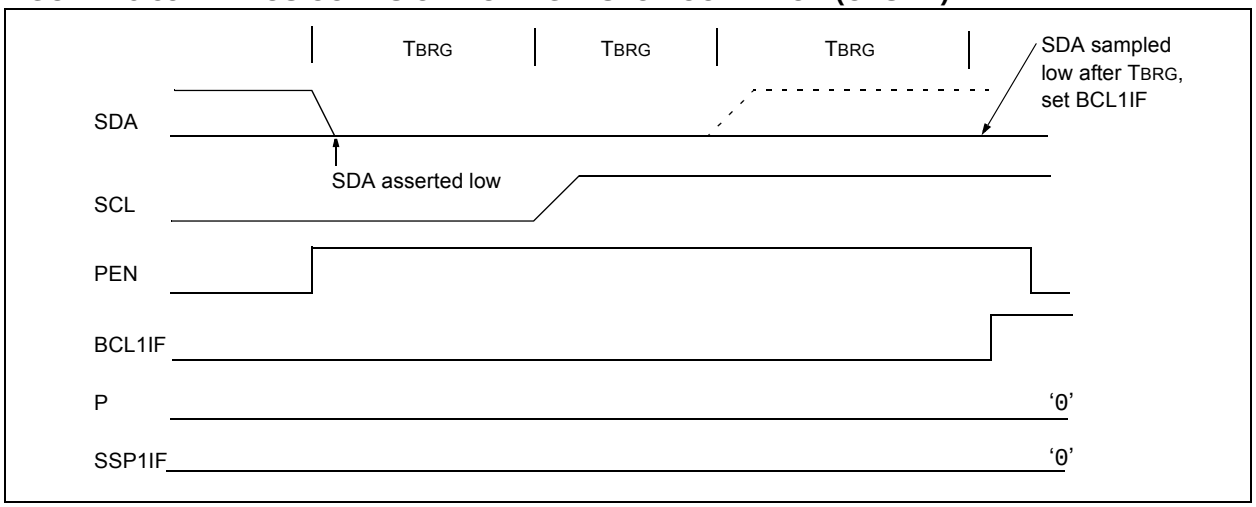

FIGURE 25-39: BUS COLLISION DURING A STOP CONDITION (CASE 2)

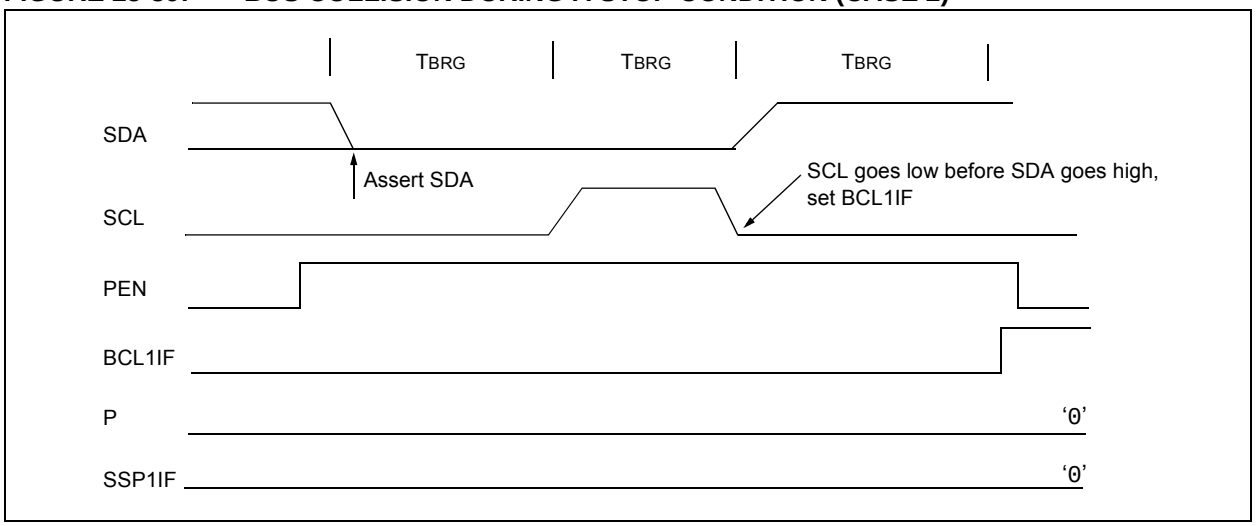

© 2010-2015 Microchip Technology Inc.

TABLE 25-3: SUMMARY OF REGISTERS ASSOCIATED WITH I²C™ OPERATION

Name	Bit 7	Bit 6	Bit 5	Bit 4	Bit 3	Bit 2	Bit 1	Bit 0	Reset Values on Page:
INLVLB(1)	INLVLB7	INLVLB6	INLVLB5	INLVLB4	—	—	—	—	128
INLVLC	INLVLC7(1)	INLVLC6(1)	INLVLC5	INLVLC4	INLVLC3	INLVLC2	INLVLC1	INLVLC0	134
INTCON	GIE	PEIE	TMR0IE	INTE	IOCIE	TMR0IF	INTF	IOCIF	89
PIE1	TMR1GIE	ADIE	RCIE	TXIE	SSP1IE	CCP1IE	TMR2IE	TMR1IE	90
PIE2	OSFIE	C2IE	C1IE	EEIE	BCL1IE	—	—	CCP2IE	91
PIR1	TMR1GIF	ADIF	RCIF	TXIF	SSP1IF	CCP1IF	TMR2IF	TMR1IF	93
PIR2	OSFIF	C2IF	C1IF	EEIF	BCL1IF	—	—	CCP2IF	94
SSP1ADD	ADD7	ADD6	ADD5	ADD4	ADD3	ADD2	ADD1	ADD0	284
SSP1BUF	Synchronous Serial Port Receive Buffer/Transmit Register								234*
SSP1CON1	WCOL	SSPOV	SSPEN	CKP	SSPM<3:0>				281
SSP1CON2	GCEN	ACKSTAT	ACKDT	ACKEN	RCEN	PEN	RSEN	SEN	282
SSP1CON3	ACKTIM	PCIE	SCIE	BOEN	SDAHT	SBCDE	AHEN	DHEN	283
SSP1MSK	MSK7	MSK6	MSK5	MSK4	MSK3	MSK2	MSK1	MSK0	284
SSP1STAT	SMP	CKE	D/$\overline{A}$	P	S	R/$\overline{W}$	UA	BF	280
TRISB(1)	TRISB7	TRISB6	TRISB5	TRISB4	—	—	—	—	127
TRISC(2)	—	—	TRISC5	TRISC4	TRISC3	TRISC2	TRISC1	TRISC0	127

Legend: — = unimplemented location, read as '0'. Shaded cells are not used by the MSSP module in I²C™ mode.
* Page provides register information.

Note 1: PIC16(L)F1828 only.
2: Unshaded cells apply to PIC16(L)F1824 only.

25.7 Baud Rate Generator

The MSSP1 module has a Baud Rate Generator available for clock generation in both I^2C and SPI Master modes. The Baud Rate Generator (BRG) reload value is placed in the SSP1ADD register (Register 25-6). When a write occurs to SSP1BUF, the Baud Rate Generator will automatically begin counting down.

Once the given operation is complete, the internal clock will automatically stop counting and the clock pin will remain in its last state.

An internal signal “Reload” in Figure 25-40 triggers the value from SSP1ADD to be loaded into the BRG counter. This occurs twice for each oscillation of the module clock line. The logic dictating when the reload signal is asserted depends on the mode the MSSP1 is being operated in.

Table 25-4 demonstrates clock rates based on instruction cycles and the BRG value loaded into SSP1ADD.

EQUATION 25-1:

$$F_{CLOCK} = \frac{F_{OSC}}{(SSPxADD + 1)(4)}$$

FIGURE 25-40: BAUD RATE GENERATOR BLOCK DIAGRAM

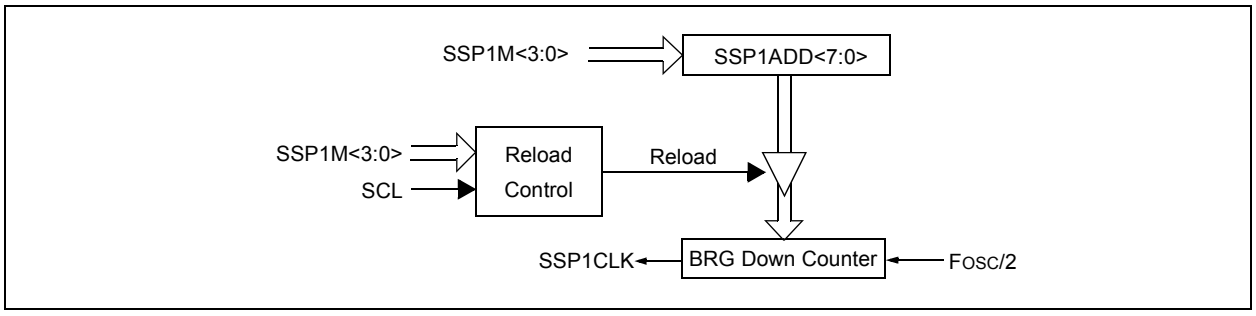

Note: Values of 0x00, 0x01 and 0x02 are not valid for SSP1ADD when used as a Baud Rate Generator for I^2C. This is an implementation limitation.

TABLE 25-4: MSSP1 CLOCK RATE W/BRG

FOSC	FCY	BRG Value	FCLOCK (2 Rollovers of BRG)
32 MHz	8 MHz	13h	400 kHz
32 MHz	8 MHz	19h	308 kHz
32 MHz	8 MHz	4Fh	100 kHz
16 MHz	4 MHz	09h	400 kHz
16 MHz	4 MHz	0Ch	308 kHz
16 MHz	4 MHz	27h	100 kHz
4 MHz	1 MHz	09h	100 kHz

Note: Refer to the I/O port electrical and timing specifications in Table 30-4 and Figure 30-7 to ensure the system is designed to support the I/O requirements.

© 2010-2015 Microchip Technology Inc.

25.7.1 ALTERNATE PIN LOCATIONS

This module incorporates I/O pins that can be moved to other locations with the use of the alternate pin function registers, APFCON0 and APFCON1. To determine which pins can be moved and what their default locations are upon a Reset, see **Section 12.1 "Alternate Pin Function"** for more information.

REGISTER 25-1: SSP1STAT: SSP1 STATUS REGISTER

R/W-0/0	R/W-0/0	R-0/0	R-0/0	R-0/0	R-0/0	R-0/0	R-0/0
SMP	CKE	D/$\overline{A}$	P	S	R/$\overline{W}$	UA	BF
bit 7							bit 0

Legend:		
R = Readable bit	W = Writable bit	U = Unimplemented bit, read as '0'
u = Bit is unchanged	x = Bit is unknown	-n/n = Value at POR and BOR/Value at all other Resets
'1' = Bit is set	'0' = Bit is cleared	

bit 7 **SMP:** SPI Data Input Sample bit

SPI Master mode:
1 = Input data sampled at end of data output time
0 = Input data sampled at middle of data output time

SPI Slave mode:
SMP must be cleared when SPI is used in Slave mode

In I^2C Master or Slave mode:
1 = Slew rate control disabled for standard speed mode (100 kHz and 1 MHz)
0 = Slew rate control enabled for high speed mode (400 kHz)

bit 6 **CKE:** SPI Clock Edge Select bit (SPI mode only)

In SPI Master or Slave mode:
1 = Transmit occurs on transition from active to Idle clock state
0 = Transmit occurs on transition from Idle to active clock state

In I^2C™ mode only:
1 = Enable input logic so that thresholds are compliant with SMbus specification
0 = Disable SMbus specific inputs

bit 5 **D/$\overline{A}$:** Data/$\overline{Address}$ bit (I^2C mode only)
1 = Indicates that the last byte received or transmitted was data
0 = Indicates that the last byte received or transmitted was address

bit 4 **P:** Stop bit
(I^2C mode only. This bit is cleared when the MSSP1 module is disabled, SSP1EN is cleared.)
1 = Indicates that a Stop bit has been detected last (this bit is '0' on Reset)
0 = Stop bit was not detected last

bit 3 **S:** Start bit
(I^2C mode only. This bit is cleared when the MSSP1 module is disabled, SSP1EN is cleared.)
1 = Indicates that a Start bit has been detected last (this bit is '0' on Reset)
0 = Start bit was not detected last

bit 2 **R/$\overline{W}$:** Read/$\overline{Write}$ bit information (I^2C mode only)
This bit holds the R/$\overline{W}$ bit information following the last address match. This bit is only valid from the address match to the next Start bit, Stop bit, or not ACK bit.

In I^2C Slave mode:
1 = Read
0 = Write

In I^2C Master mode:
1 = Transmit is in progress
0 = Transmit is not in progress
OR-ing this bit with SEN, RSEN, PEN, RCEN or ACKEN will indicate if the MSSP1 is in Idle mode.

bit 1 **UA:** Update Address bit (10-bit I^2C mode only)
1 = Indicates that the user needs to update the address in the SSP1ADD register
0 = Address does not need to be updated

bit 0 **BF:** Buffer Full Status bit

Receive (SPI and I^2C modes):
1 = Receive complete, SSP1BUF is full
0 = Receive not complete, SSP1BUF is empty

Transmit (I^2C mode only):
1 = Data transmit in progress (does not include the $\overline{ACK}$ and Stop bits), SSP1BUF is full
0 = Data transmit complete (does not include the $\overline{ACK}$ and Stop bits), SSP1BUF is empty

© 2010-2015 Microchip Technology Inc.

REGISTER 25-2: SSP1CON1: SSP1 CONTROL REGISTER 1

R/C/HS-0/0	R/C/HS-0/0	R/W-0/0	R/W-0/0	R/W-0/0	R/W-0/0	R/W-0/0	R/W-0/0
WCOL	SSPOV	SSPEN	CKP	SSPM<3:0>			
bit 7							bit 0

Legend:			
R = Readable bit	W = Writable bit	U = Unimplemented bit, read as '0'	
u = Bit is unchanged	x = Bit is unknown	-n/n = Value at POR and BOR/Value at all other Resets	
'1' = Bit is set	'0' = Bit is cleared	HS = Bit is set by hardware	C = User cleared

bit 7 **WCOL:** Write Collision Detect bit
Master mode:
1 = A write to the SSP1BUF register was attempted while the I²C™ conditions were not valid for a transmission to be started
0 = No collision
Slave mode:
1 = The SSP1BUF register is written while it is still transmitting the previous word (must be cleared in software)
0 = No collision

bit 6 **SSPOV:** Receive Overflow Indicator bit(1)
In SPI mode:
1 = A new byte is received while the SSP1BUF register is still holding the previous data. In case of overflow, the data in SSP1SR is lost. Overflow can only occur in Slave mode. In Slave mode, the user must read the SSP1BUF, even if only transmitting data, to avoid setting overflow. In Master mode, the overflow bit is not set since each new reception (and transmission) is initiated by writing to the SSP1BUF register (must be cleared in software).
0 = No overflow
In I²C mode:
1 = A byte is received while the SSP1BUF register is still holding the previous byte. SSPOV is a "don't care" in Transmit mode (must be cleared in software).
0 = No overflow

bit 5 **SSPEN:** Synchronous Serial Port Enable bit
In both modes, when enabled, these pins must be properly configured as input or output
In SPI mode:
1 = Enables serial port and configures SCK, SDO, SDI and $\overline{SS}$ as the source of the serial port pins(2)
0 = Disables serial port and configures these pins as I/O port pins
In I²C mode:
1 = Enables the serial port and configures the SDA and SCL pins as the source of the serial port pins(3)
0 = Disables serial port and configures these pins as I/O port pins

bit 4 **CKP:** Clock Polarity Select bit
In SPI mode:
1 = Idle state for clock is a high level
0 = Idle state for clock is a low level
In I²C Slave mode:
SCL release control
1 = Enable clock
0 = Holds clock low (clock stretch). (Used to ensure data setup time.)
In I²C Master mode:
Unused in this mode

bit 3-0 **SSPM<3:0>:** Synchronous Serial Port Mode Select bits
0000 = SPI Master mode, clock = FOSC/4
0001 = SPI Master mode, clock = FOSC/16
0010 = SPI Master mode, clock = FOSC/64
0011 = SPI Master mode, clock = TMR2 output/2
0100 = SPI Slave mode, clock = SCK pin, $\overline{SS}$ pin control enabled
0101 = SPI Slave mode, clock = SCK pin, $\overline{SS}$ pin control disabled, $\overline{SS}$ can be used as I/O pin
0110 = I²C Slave mode, 7-bit address
0111 = I²C Slave mode, 10-bit address
1000 = I²C Master mode, clock = FOSC/(4 * (SSP1ADD+1))(4)
1001 = Reserved
1010 = SPI Master mode, clock = FOSC/(4 * (SSP1ADD+1))(5)
1011 = I²C firmware controlled Master mode (Slave idle)
1100 = Reserved
1101 = Reserved
1110 = I²C Slave mode, 7-bit address with Start and Stop bit interrupts enabled
1111 = I²C Slave mode, 10-bit address with Start and Stop bit interrupts enabled

Note 1: In Master mode, the overflow bit is not set since each new reception (and transmission) is initiated by writing to the SSP1BUF register.
2: When enabled, these pins must be properly configured as input or output.
3: When enabled, the SDA and SCL pins must be configured as inputs.
4: SSP1ADD values of 0, 1 or 2 are not supported for I²C™ mode.
5: SSPxADD value of 0 is not supported. Use SSPxM = 0000 instead.

REGISTER 25-3: SSP1CON2: SSP1 CONTROL REGISTER 2

R/W-0/0	R-0/0	R/W-0/0	R/S/HS-0/0	R/S/HS-0/0	R/S/HS-0/0	R/S/HS-0/0	R/W/HS-0/0
GCEN	ACKSTAT	ACKDT	ACKEN	RCEN	PEN	RSEN	SEN
bit 7							bit 0

Legend:		
R = Readable bit	W = Writable bit	U = Unimplemented bit, read as '0'
u = Bit is unchanged	x = Bit is unknown	-n/n = Value at POR and BOR/Value at all other Resets
'1' = Bit is set	'0' = Bit is cleared	HC = Cleared by hardware S = User set

bit 7 **GCEN:** General Call Enable bit (in I^2C Slave mode only)
1 = Enable interrupt when a general call address (0x00 or 00h) is received in the SSP1SR
0 = General call address disabled

bit 6 **ACKSTAT:** Acknowledge Status bit (in I^2C mode only)
1 = Acknowledge was not received
0 = Acknowledge was received

bit 5 **ACKDT:** Acknowledge Data bit (in I^2C mode only)
In Receive mode:
Value transmitted when the user initiates an Acknowledge sequence at the end of a receive
1 = Not Acknowledge
0 = Acknowledge

bit 4 **ACKEN:** Acknowledge Sequence Enable bit (in I^2C Master mode only)
In Master Receive mode:
1 = Initiate Acknowledge sequence on SDA and SCL pins, and transmit ACKDT data bit. Automatically cleared by hardware.
0 = Acknowledge sequence idle

bit 3 **RCEN:** Receive Enable bit (in I^2C Master mode only)
1 = Enables Receive mode for I^2C
0 = Receive idle

bit 2 **PEN:** Stop Condition Enable bit (in I^2C Master mode only)
SCK Release Control:
1 = Initiate Stop condition on SDA and SCL pins. Automatically cleared by hardware.
0 = Stop condition Idle

bit 1 **RSEN:** Repeated Start Condition Enabled bit (in I^2C Master mode only)
1 = Initiate Repeated Start condition on SDA and SCL pins. Automatically cleared by hardware.
0 = Repeated Start condition Idle

bit 0 **SEN:** Start Condition Enabled bit (in I^2C Master mode only)
In Master mode:
1 = Initiate Start condition on SDA and SCL pins. Automatically cleared by hardware.
0 = Start condition Idle
In Slave mode:
1 = Clock stretching is enabled for both slave transmit and slave receive (stretch enabled)
0 = Clock stretching is disabled

Note 1: For bits ACKEN, RCEN, PEN, RSEN, SEN: If the I^2C module is not in the Idle mode, this bit may not be set (no spooling) and the SSP1BUF may not be written (or writes to the SSP1BUF are disabled).

© 2010-2015 Microchip Technology Inc.

REGISTER 25-4: SSP1CON3: SSP1 CONTROL REGISTER 3

R-0/0	R/W-0/0	R/W-0/0	R/W-0/0	R/W-0/0	R/W-0/0	R/W-0/0	R/W-0/0
ACKTIM	PCIE	SCIE	BOEN	SDAHT	SBCDE	AHEN	DHEN
bit 7							bit 0

Legend:		
R = Readable bit	W = Writable bit	U = Unimplemented bit, read as '0'
u = Bit is unchanged	x = Bit is unknown	-n/n = Value at POR and BOR/Value at all other Resets
'1' = Bit is set	'0' = Bit is cleared	

bit 7 **ACKTIM:** Acknowledge Time Status bit (I^2C mode only)**(3)**
1 = Indicates the I^2C bus is in an Acknowledge sequence, set on 8TH falling edge of SCL clock
0 = Not an Acknowledge sequence, cleared on 9TH rising edge of SCL clock

bit 6 **PCIE**: Stop Condition Interrupt Enable bit (I^2C mode only)
1 = Enable interrupt on detection of Stop condition
0 = Stop detection interrupts are disabled**(2)**

bit 5 **SCIE**: Start Condition Interrupt Enable bit (I^2C mode only)
1 = Enable interrupt on detection of Start or Restart conditions
0 = Start detection interrupts are disabled**(2)**

bit 4 **BOEN:** Buffer Overwrite Enable bit
In SPI Slave mode:**(1)**
1 = SSP1BUF updates every time that a new data byte is shifted in ignoring the BF bit
0 = If new byte is received with BF bit of the SSP1STAT register already set, SSPOV bit of the SSP1CON1 register is set, and the buffer is not updated
In I^2C Master mode and SPI Master mode:
This bit is ignored.
In I^2C Slave mode:
1 = SSP1BUF is updated and $\overline{ACK}$ is generated for a received address/data byte, ignoring the state of the SSPOV bit only if the BF bit = 0.
0 = SSP1BUF is only updated when SSPOV is clear

bit 3 **SDAHT:** SDA Hold Time Selection bit (I^2C mode only)
1 = Minimum of 300 ns hold time on SDA after the falling edge of SCL
0 = Minimum of 100 ns hold time on SDA after the falling edge of SCL

bit 2 **SBCDE:** Slave Mode Bus Collision Detect Enable bit (I^2C Slave mode only)
If on the rising edge of SCL, SDA is sampled low when the module is outputting a high state, the BCL1IF bit of the PIR2 register is set, and bus goes idle
1 = Enable slave bus collision interrupts
0 = Slave bus collision interrupts are disabled

bit 1 **AHEN:** Address Hold Enable bit (I^2C Slave mode only)
1 = Following the 8th falling edge of SCL for a matching received address byte; CKP bit of the SSP1CON1 register will be cleared and the SCL will be held low.
0 = Address holding is disabled

bit 0 **DHEN:** Data Hold Enable bit (I^2C Slave mode only)
1 = Following the 8th falling edge of SCL for a received data byte; slave hardware clears the CKP bit of the SSP1CON1 register and SCL is held low.
0 = Data holding is disabled

Note 1: For daisy-chained SPI operation; allows the user to ignore all but the last received byte. SSPOV is still set when a new byte is received and BF = 1, but hardware continues to write the most recent byte to SSP1BUF.
2: This bit has no effect in Slave modes that Start and Stop condition detection is explicitly listed as enabled.
3: The ACKTIM Status bit is only active when the AHEN bit or DHEN bit is set.

REGISTER 25-5: SSP1MSK: SSP1 MASK REGISTER

R/W-1/1	R/W-1/1	R/W-1/1	R/W-1/1	R/W-1/1	R/W-1/1	R/W-1/1	R/W-1/1
MSK<7:0>							
bit 7							bit 0

Legend:		
R = Readable bit	W = Writable bit	U = Unimplemented bit, read as '0'
u = Bit is unchanged	x = Bit is unknown	-n/n = Value at POR and BOR/Value at all other Resets
'1' = Bit is set	'0' = Bit is cleared	

bit 7-1 **MSK<7:1>:** Mask bits
1 = The received address bit n is compared to SSP1ADD<n> to detect I^2C address match
0 = The received address bit n is not used to detect I^2C address match

bit 0 **MSK<0>:** Mask bit for I^2C Slave mode, 10-bit Address
I^2C Slave mode, 10-bit address (SSP1M<3:0> = 0111 or 1111):
1 = The received address bit 0 is compared to SSP1ADD<0> to detect I^2C address match
0 = The received address bit 0 is not used to detect I^2C address match I^2C Slave mode, 7-bit address, the bit is ignored

REGISTER 25-6: SSP1ADD: MSSP1 ADDRESS AND BAUD RATE REGISTER (I^2C MODE)

R/W-0/0	R/W-0/0	R/W-0/0	R/W-0/0	R/W-0/0	R/W-0/0	R/W-0/0	R/W-0/0
ADD<7:0>							
bit 7							bit 0

Legend:		
R = Readable bit	W = Writable bit	U = Unimplemented bit, read as '0'
u = Bit is unchanged	x = Bit is unknown	-n/n = Value at POR and BOR/Value at all other Resets
'1' = Bit is set	'0' = Bit is cleared	

Master mode:

bit 7-0 **ADD<7:0>:** Baud Rate Clock Divider bits
SCL pin clock period = ((ADD<7:0> + 1) *4)/FOSC

10-Bit Slave mode — Most Significant Address byte:

bit 7-3 **Not used:** Unused for Most Significant Address byte. Bit state of this register is a "don't care." Bit pattern sent by master is fixed by I^2C specification and must be equal to '11110'. However, those bits are compared by hardware and are not affected by the value in this register.

bit 2-1 **ADD<2:1>:** Two Most Significant bits of 10-bit address

bit 0 **Not used:** Unused in this mode. Bit state is a "don't care."

10-Bit Slave mode — Least Significant Address byte:

bit 7-0 **ADD<7:0>:** Eight Least Significant bits of 10-bit address

7-Bit Slave mode:

bit 7-1 **ADD<7:1>:** 7-bit address

bit 0 **Not used:** Unused in this mode. Bit state is a "don't care."

© 2010-2015 Microchip Technology Inc.

26.0 ENHANCED UNIVERSAL SYNCHRONOUS ASYNCHRONOUS RECEIVER TRANSMITTER (EUSART)

The Enhanced Universal Synchronous Asynchronous Receiver Transmitter (EUSART) module is a serial I/O communications peripheral. It contains all the clock generators, shift registers and data buffers necessary to perform an input or output serial data transfer independent of device program execution. The EUSART, also known as a Serial Communications Interface (SCI), can be configured as a full-duplex asynchronous system or half-duplex synchronous system. Full-Duplex mode is useful for communications with peripheral systems, such as CRT terminals and personal computers. Half-Duplex Synchronous mode is intended for communications with peripheral devices, such as A/D or D/A integrated circuits, serial EEPROMs or other microcontrollers. These devices typically do not have internal clocks for baud rate generation and require the external clock signal provided by a master synchronous device.

The EUSART module includes the following capabilities:

- Full-duplex asynchronous transmit and receive
- Two-character input buffer
- One-character output buffer
- Programmable 8-bit or 9-bit character length
- Address detection in 9-bit mode
- Input buffer overrun error detection
- Received character framing error detection
- Half-duplex synchronous master
- Half-duplex synchronous slave
- Programmable clock polarity in synchronous modes
- Sleep operation

The EUSART module implements the following additional features, making it ideally suited for use in Local Interconnect Network (LIN) bus systems:

- Automatic detection and calibration of the baud rate
- Wake-up on Break reception
- 13-bit Break character transmit

Block diagrams of the EUSART transmitter and receiver are shown in Figure 26-1 and Figure 26-2.

FIGURE 26-1: EUSART TRANSMIT BLOCK DIAGRAM

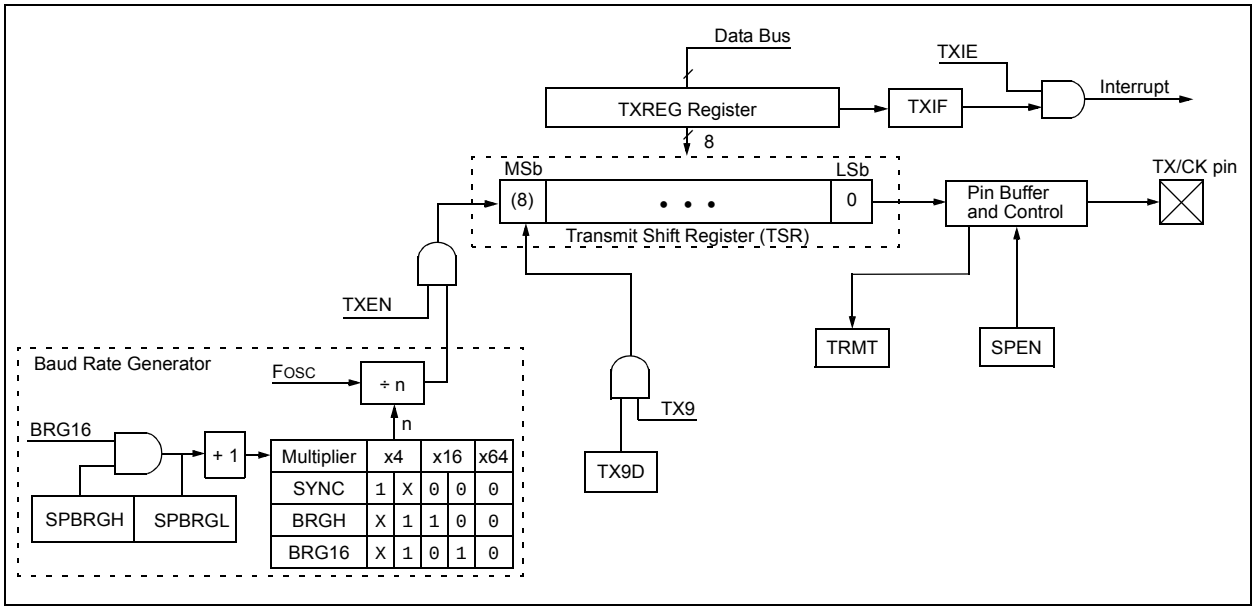

FIGURE 26-2: EUSART RECEIVE BLOCK DIAGRAM

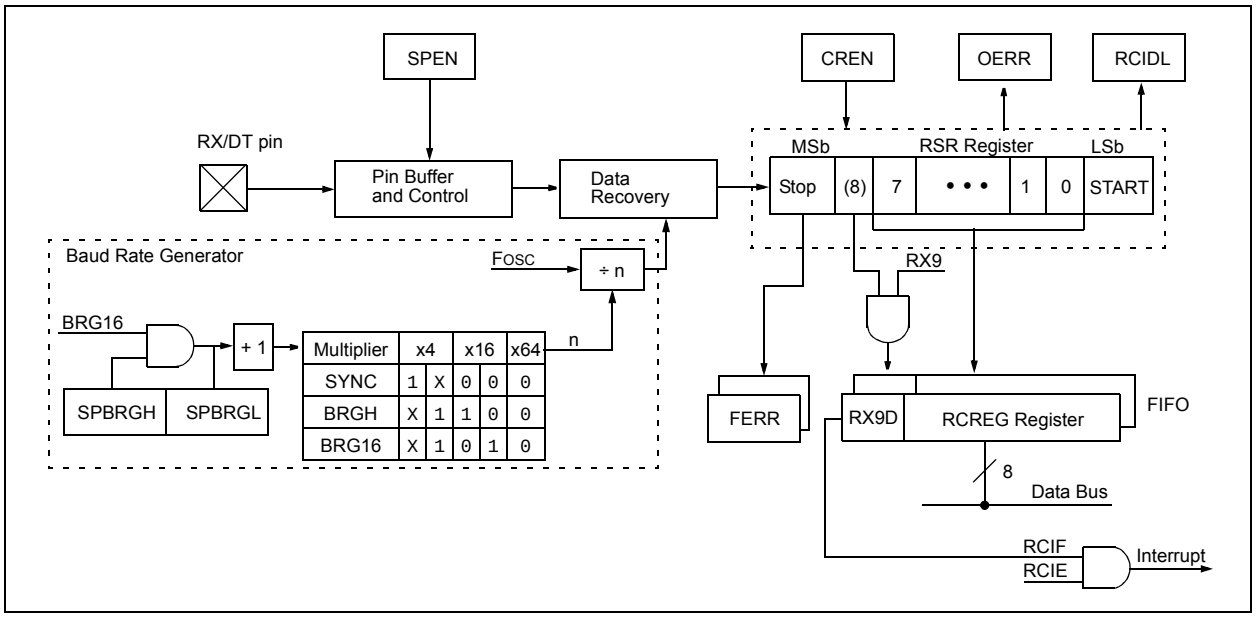

The operation of the EUSART module is controlled through three registers:

- Transmit Status and Control (TXSTA)
- Receive Status and Control (RCSTA)
- Baud Rate Control (BAUDCON)

These registers are detailed in Register 26-1, Register 26-2 and Register 26-3, respectively.

When the receiver or transmitter section is not enabled then the corresponding RX or TX pin may be used for general purpose input and output.

© 2010-2015 Microchip Technology Inc.

26.1 EUSART Asynchronous Mode

The EUSART transmits and receives data using the standard non-return-to-zero (NRZ) format. NRZ is implemented with two levels: a VOH mark state which represents a '1' data bit, and a VOL space state which represents a '0' data bit. NRZ refers to the fact that consecutively transmitted data bits of the same value stay at the output level of that bit without returning to a neutral level between each bit transmission. An NRZ transmission port idles in the mark state. Each character transmission consists of one Start bit followed by eight or nine data bits and is always terminated by one or more Stop bits. The Start bit is always a space and the Stop bits are always marks. The most common data format is eight bits. Each transmitted bit persists for a period of 1/(Baud Rate). An on-chip dedicated 8-bit/16-bit Baud Rate Generator is used to derive standard baud rate frequencies from the system oscillator. See Table 26-5 for examples of baud rate configurations.

The EUSART transmits and receives the LSb first. The EUSART's transmitter and receiver are functionally independent, but share the same data format and baud rate. Parity is not supported by the hardware, but can be implemented in software and stored as the ninth data bit.

26.1.1 EUSART ASYNCHRONOUS TRANSMITTER

The EUSART transmitter block diagram is shown in Figure 26-1. The heart of the transmitter is the serial Transmit Shift Register (TSR), which is not directly accessible by software. The TSR obtains its data from the transmit buffer, which is the TXREG register.

26.1.1.1 Enabling the Transmitter

The EUSART transmitter is enabled for asynchronous operations by configuring the following three control bits:

- TXEN = 1
- SYNC = 0
- SPEN = 1

All other EUSART control bits are assumed to be in their default state.

Setting the TXEN bit of the TXSTA register enables the transmitter circuitry of the EUSART. Clearing the SYNC bit of the TXSTA register configures the EUSART for asynchronous operation. Setting the SPEN bit of the RCSTA register enables the EUSART and automatically configures the TX/CK I/O pin as an output. If the TX/CK pin is shared with an analog peripheral, the analog I/O function must be disabled by clearing the corresponding ANSEL bit.

Note 1:	The TXIF Transmitter Interrupt flag is set when the TXEN enable bit is set.

26.1.1.2 Transmitting Data

A transmission is initiated by writing a character to the TXREG register. If this is the first character, or the previous character has been completely flushed from the TSR, the data in the TXREG is immediately transferred to the TSR register. If the TSR still contains all or part of a previous character, the new character data is held in the TXREG until the Stop bit of the previous character has been transmitted. The pending character in the TXREG is then transferred to the TSR in one TCY immediately following the Stop bit transmission. The transmission of the Start bit, data bits and Stop bit sequence commences immediately following the transfer of the data to the TSR from the TXREG.

26.1.1.3 Transmit Interrupt Flag

The TXIF interrupt flag bit of the PIR1 register is set whenever the EUSART transmitter is enabled and no character is being held for transmission in the TXREG. In other words, the TXIF bit is only clear when the TSR is busy with a character and a new character has been queued for transmission in the TXREG. The TXIF flag bit is not cleared immediately upon writing TXREG. TXIF becomes valid in the second instruction cycle following the write execution. Polling TXIF immediately following the TXREG write will return invalid results. The TXIF bit is read-only, it cannot be set or cleared by software.

The TXIF interrupt can be enabled by setting the TXIE interrupt enable bit of the PIE1 register. However, the TXIF flag bit will be set whenever the TXREG is empty, regardless of the state of TXIE enable bit.

To use interrupts when transmitting data, set the TXIE bit only when there is more data to send. Clear the TXIE interrupt enable bit upon writing the last character of the transmission to the TXREG.

26.1.1.4 TSR Status

The TRMT bit of the TXSTA register indicates the status of the TSR register. This is a read-only bit. The TRMT bit is set when the TSR register is empty and is cleared when a character is transferred to the TSR register from the TXREG. The TRMT bit remains clear until all bits have been shifted out of the TSR register. No interrupt logic is tied to this bit, so the user has to poll this bit to determine the TSR status.

Note:	The TSR register is not mapped in data memory, so it is not available to the user.

26.1.1.5 Transmitting 9-bit Characters

The EUSART supports 9-bit character transmissions. When the TX9 bit of the TXSTA register is set, the EUSART will shift nine bits out for each character transmitted. The TX9D bit of the TXSTA register is the ninth, and Most Significant, data bit. When transmitting 9-bit data, the TX9D data bit must be written before writing the eight Least Significant bits into the TXREG. All nine bits of data will be transferred to the TSR shift register immediately after the TXREG is written.

A special 9-bit Address mode is available for use with multiple receivers. See **Section 26.1.2.7 "Address Detection"** for more information on the address mode.

26.1.1.6 Asynchronous Transmission Setup:

1. Initialize the SPBRGH, SPBRGL register pair and the BRGH and BRG16 bits to achieve the desired baud rate (see **Section 26.3 "EUSART Baud Rate Generator (BRG)"**).
2. Enable the asynchronous serial port by clearing the SYNC bit and setting the SPEN bit.
3. If 9-bit transmission is desired, set the TX9 control bit. A set ninth data bit will indicate that the eight Least Significant data bits are an address when the receiver is set for address detection.
4. Enable the transmission by setting the TXEN control bit. This will cause the TXIF interrupt bit to be set.
5. If interrupts are desired, set the TXIE interrupt enable bit of the PIE1 register. An interrupt will occur immediately provided that the GIE and PEIE bits of the INTCON register are also set.
6. If 9-bit transmission is selected, the ninth bit should be loaded into the TX9D data bit.
7. Load 8-bit data into the TXREG register. This will start the transmission.

FIGURE 26-3: ASYNCHRONOUS TRANSMISSION

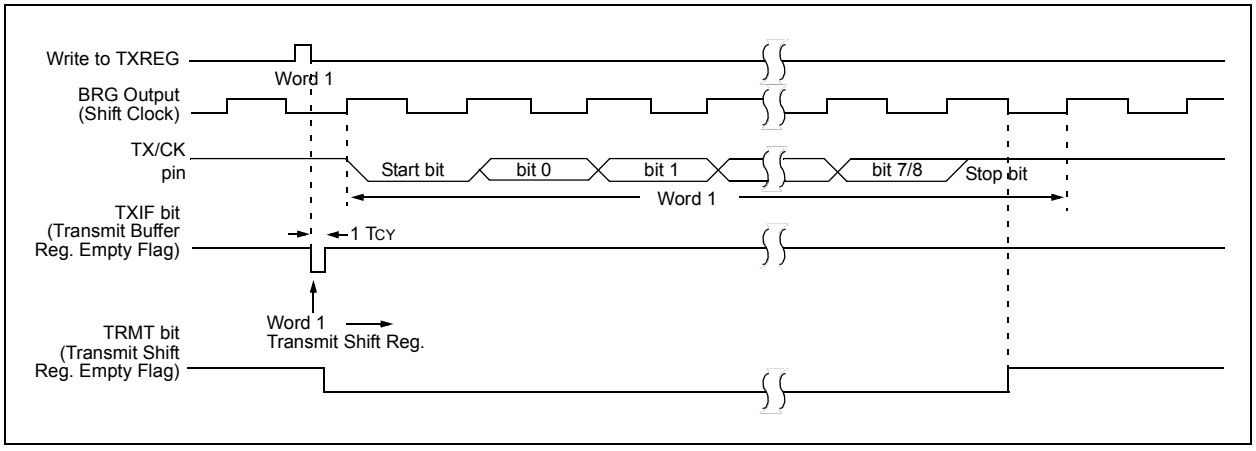

© 2010-2015 Microchip Technology Inc.

FIGURE 26-4: ASYNCHRONOUS TRANSMISSION (BACK-TO-BACK)

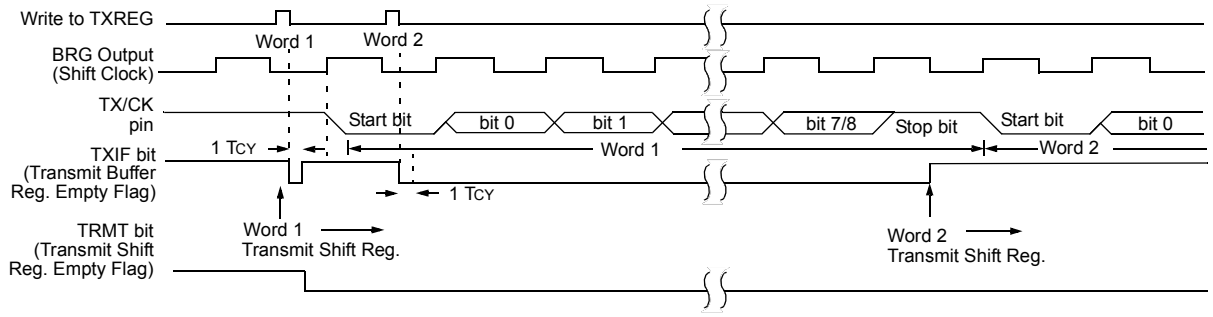

Note: This timing diagram shows two consecutive transmissions.

TABLE 26-1: SUMMARY OF REGISTERS ASSOCIATED WITH ASYNCHRONOUS TRANSMISSION

Name	Bit 7	Bit 6	Bit 5	Bit 4	Bit 3	Bit 2	Bit 1	Bit 0	Register on Page
APFCON0	RXDTSEL	SDOSEL(2)	SSSEL(2)	—	T1GSEL	TXCKSEL	—	—	117
BAUDCON	ABDOVF	RCIDL	—	SCKP	BRG16	—	WUE	ABDEN	296
INLVLA(3)	—	—	INLVLA5	INLVLA4	INLVLA3	INLVLA2	INLVLA1	INLVLA0	123
INLVLB(1)	INLVLB7	INLVLB6	INLVLB5	INLVLB4	—	—	—	—	128
INLVLC	INLVLC7(1)	INLVLC6(1)	INLVLC5	INLVLC4	INLVLC3	INLVLC2	INLVLC1	INLVLC0	134
INTCON	GIE	PEIE	TMR0IE	INTE	IOCIE	TMR0IF	INTF	IOCIF	89
PIE1	TMR1GIE	ADIE	RCIE	TXIE	SSP1IE	CCP1IE	TMR2IE	TMR1IE	90
PIR1	TMR1GIF	ADIF	RCIF	TXIF	SSP1IF	CCP1IF	TMR2IF	TMR1IF	93
RCSTA	SPEN	RX9	SREN	CREN	ADDEN	FERR	OERR	RX9D	295
SPBRGL	BRG7	BRG6	BRG5	BRG4	BRG3	BRG2	BRG1	BRG0	297*
SPBRGH	BRG15	BRG14	BRG13	BRG12	BRG11	BRG10	BRG9	BRG8	297*
TRISA3)	—	—	TRISA5	TRISA4	TRISA3	TRISA2	TRISA1	TRISA0	121
TRISB(1)	TRISB7	TRISB6	TRISB5	TRISB4	—	—	—	—	127
TRISC	TRISC7(1)	TRISC6(1)	TRISC5	TRISC4	TRISC3	TRISC2	TRISC1	TRISC0	127
TXREG	EUSART Transmit Data Register								287*
TXSTA	CSRC	TX9	TXEN	SYNC	SENDB	BRGH	TRMT	TX9D	294

Legend: — = unimplemented location, read as '0'. Shaded cells are not used for asynchronous transmission.
* Page provides register information.

Note 1: PIC16(L)F1828 only.
2: PIC16(L)F1824 only.
3: Unshaded cells apply to PIC16(L)F1824 only.

26.1.2 EUSART ASYNCHRONOUS RECEIVER

The Asynchronous mode is typically used in RS-232 systems. The receiver block diagram is shown in Figure 26-2. The data is received on the RX/DT pin and drives the data recovery block. The data recovery block is actually a high-speed shifter operating at 16 times the baud rate, whereas the serial Receive Shift Register (RSR) operates at the bit rate. When all eight or nine bits of the character have been shifted in, they are immediately transferred to a two character First-In-First-Out (FIFO) memory. The FIFO buffering allows reception of two complete characters and the start of a third character before software must start servicing the EUSART receiver. The FIFO and RSR registers are not directly accessible by software. Access to the received data is via the RCREG register.

26.1.2.1 Enabling the Receiver

The EUSART receiver is enabled for asynchronous operation by configuring the following three control bits:

- CREN = 1
- SYNC = 0
- SPEN = 1

All other EUSART control bits are assumed to be in their default state.

Setting the CREN bit of the RCSTA register enables the receiver circuitry of the EUSART. Clearing the SYNC bit of the TXSTA register configures the EUSART for asynchronous operation. Setting the SPEN bit of the RCSTA register enables the EUSART. The programmer must set the corresponding TRIS bit to configure the TX/CK I/O pin as an input.

Note 1:	If the RX/DT function is on an analog pin, the corresponding ANSEL bit must be cleared for the receiver to function.

26.1.2.2 Receiving Data

The receiver data recovery circuit initiates character reception on the falling edge of the first bit. The first bit, also known as the Start bit, is always a zero. The data recovery circuit counts one-half bit time to the center of the Start bit and verifies that the bit is still a zero. If it is not a zero then the data recovery circuit aborts character reception, without generating an error, and resumes looking for the falling edge of the Start bit. If the Start bit zero verification succeeds then the data recovery circuit counts a full bit time to the center of the next bit. The bit is then sampled by a majority detect circuit and the resulting '0' or '1' is shifted into the RSR. This repeats until all data bits have been sampled and shifted into the RSR. One final bit time is measured and the level sampled. This is the Stop bit, which is always a '1'. If the data recovery circuit samples a '0' in the Stop bit position then a framing error is set for this character, otherwise the framing error is cleared for this character. See **Section 26.1.2.4 "Receive Framing Error"** for more information on framing errors.

Immediately after all data bits and the Stop bit have been received, the character in the RSR is transferred to the EUSART receive FIFO and the RCIF interrupt flag bit of the PIR1 register is set. The top character in the FIFO is transferred out of the FIFO by reading the RCREG register.

Note:	If the receive FIFO is overrun, no additional characters will be received until the overrun condition is cleared. See **Section 26.1.2.5 "Receive Overrun Error"** for more information on overrun errors.

26.1.2.3 Receive Interrupts

The RCIF interrupt flag bit of the PIR1 register is set whenever the EUSART receiver is enabled and there is an unread character in the receive FIFO. The RCIF interrupt flag bit is read-only, it cannot be set or cleared by software.

RCIF interrupts are enabled by setting all of the following bits:

- RCIE interrupt enable bit of the PIE1 register
- PEIE peripheral interrupt enable bit of the INTCON register
- GIE global interrupt enable bit of the INTCON register

The RCIF interrupt flag bit will be set when there is an unread character in the FIFO, regardless of the state of interrupt enable bits.

© 2010-2015 Microchip Technology Inc.

26.1.2.4 Receive Framing Error

Each character in the receive FIFO buffer has a corresponding framing error Status bit. A framing error indicates that a Stop bit was not seen at the expected time. The framing error status is accessed via the FERR bit of the RCSTA register. The FERR bit represents the status of the top unread character in the receive FIFO. Therefore, the FERR bit must be read before reading the RCREG.

The FERR bit is read-only and only applies to the top unread character in the receive FIFO. A framing error (FERR = 1) does not preclude reception of additional characters. It is not necessary to clear the FERR bit. Reading the next character from the FIFO buffer will advance the FIFO to the next character and the next corresponding framing error.

The FERR bit can be forced clear by clearing the SPEN bit of the RCSTA register which resets the EUSART. Clearing the CREN bit of the RCSTA register does not affect the FERR bit. A framing error by itself does not generate an interrupt.

Note:	If all receive characters in the receive FIFO have framing errors, repeated reads of the RCREG will not clear the FERR bit.

26.1.2.5 Receive Overrun Error

The receive FIFO buffer can hold two characters. An overrun error will be generated if a third character, in its entirety, is received before the FIFO is accessed. When this happens the OERR bit of the RCSTA register is set. The characters already in the FIFO buffer can be read but no additional characters will be received until the error is cleared. The error must be cleared by either clearing the CREN bit of the RCSTA register or by resetting the EUSART by clearing the SPEN bit of the RCSTA register.

26.1.2.6 Receiving 9-bit Characters

The EUSART supports 9-bit character reception. When the RX9 bit of the RCSTA register is set the EUSART will shift nine bits into the RSR for each character received. The RX9D bit of the RCSTA register is the ninth and Most Significant data bit of the top unread character in the receive FIFO. When reading 9-bit data from the receive FIFO buffer, the RX9D data bit must be read before reading the eight Least Significant bits from the RCREG.

26.1.2.7 Address Detection

A special Address Detection mode is available for use when multiple receivers share the same transmission line, such as in RS-485 systems. Address detection is enabled by setting the ADDEN bit of the RCSTA register.

Address detection requires 9-bit character reception. When address detection is enabled, only characters with the ninth data bit set will be transferred to the receive FIFO buffer, thereby setting the RCIF interrupt bit. All other characters will be ignored.

Upon receiving an address character, user software determines if the address matches its own. Upon address match, user software must disable address detection by clearing the ADDEN bit before the next Stop bit occurs. When user software detects the end of the message, determined by the message protocol used, software places the receiver back into the Address Detection mode by setting the ADDEN bit.

26.1.2.8 Asynchronous Reception Setup:

1. Initialize the SPBRGH, SPBRGL register pair and the BRGH and BRG16 bits to achieve the desired baud rate (see **Section 26.3 "EUSART Baud Rate Generator (BRG)"**).
2. Clear the ANSEL bit for the RX pin (if applicable).
3. Enable the serial port by setting the SPEN bit. The SYNC bit must be clear for asynchronous operation.
4. If interrupts are desired, set the RCIE bit of the PIE1 register and the GIE and PEIE bits of the INTCON register.
5. If 9-bit reception is desired, set the RX9 bit.
6. Enable reception by setting the CREN bit.
7. The RCIF interrupt flag bit will be set when a character is transferred from the RSR to the receive buffer. An interrupt will be generated if the RCIE interrupt enable bit was also set.
8. Read the RCSTA register to get the error flags and, if 9-bit data reception is enabled, the ninth data bit.
9. Get the received eight Least Significant data bits from the receive buffer by reading the RCREG register.
10. If an overrun occurred, clear the OERR flag by clearing the CREN receiver enable bit.

26.1.2.9 9-bit Address Detection Mode Setup

This mode would typically be used in RS-485 systems. To set up an Asynchronous Reception with Address Detect Enable:

1. Initialize the SPBRGH, SPBRGL register pair and the BRGH and BRG16 bits to achieve the desired baud rate (see **Section 26.3 "EUSART Baud Rate Generator (BRG)"**).
2. Clear the ANSEL bit for the RX pin (if applicable).
3. Enable the serial port by setting the SPEN bit. The SYNC bit must be clear for asynchronous operation.
4. If interrupts are desired, set the RCIE bit of the PIE1 register and the GIE and PEIE bits of the INTCON register.
5. Enable 9-bit reception by setting the RX9 bit.
6. Enable address detection by setting the ADDEN bit.
7. Enable reception by setting the CREN bit.
8. The RCIF interrupt flag bit will be set when a character with the ninth bit set is transferred from the RSR to the receive buffer. An interrupt will be generated if the RCIE interrupt enable bit was also set.
9. Read the RCSTA register to get the error flags. The ninth data bit will always be set.
10. Get the received eight Least Significant data bits from the receive buffer by reading the RCREG register. Software determines if this is the device's address.
11. If an overrun occurred, clear the OERR flag by clearing the CREN receiver enable bit.
12. If the device has been addressed, clear the ADDEN bit to allow all received data into the receive buffer and generate interrupts.

FIGURE 26-5: ASYNCHRONOUS RECEPTION

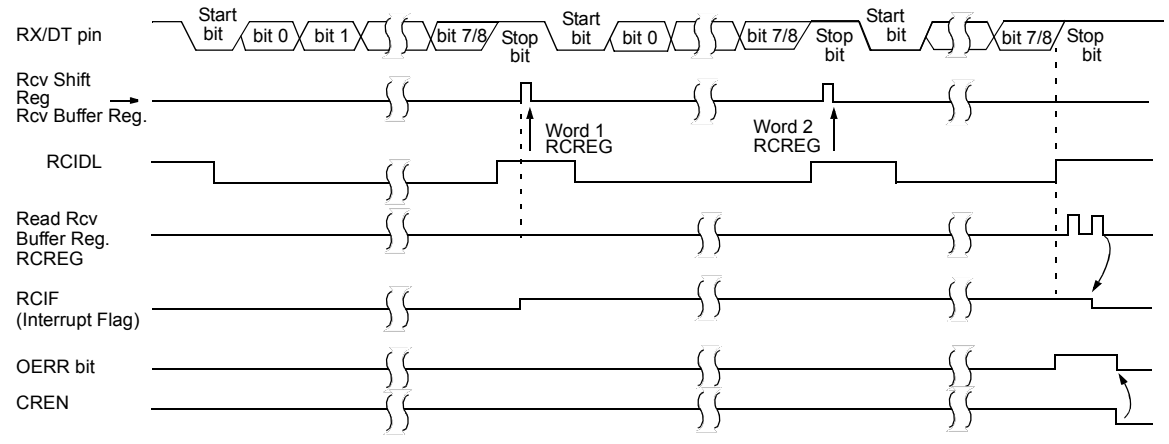

Note: This timing diagram shows three words appearing on the RX input. The RCREG (receive buffer) is read after the third word, causing the OERR (overrun) bit to be set.

© 2010-2015 Microchip Technology Inc.

TABLE 26-2: SUMMARY OF REGISTERS ASSOCIATED WITH ASYNCHRONOUS RECEPTION

Name	Bit 7	Bit 6	Bit 5	Bit 4	Bit 3	Bit 2	Bit 1	Bit 0	Register on Page
APFCON0	RXDTSEL	SDOSEL(2)	SSSEL(2)	—	T1GSEL	TXCKSEL	—	—	117
BAUDCON	ABDOVF	RCIDL	—	SCKP	BRG16	—	WUE	ABDEN	296
INLVLA(3)	—	—	INLVLA5	INLVLA4	INLVLA3	INLVLA2	INLVLA1	INLVLA0	123
INLVLB(1)	INLVLB7	INLVLB6	INLVLB5	INLVLB4	—	—	—	—	128
INLVLC	INLVLC7(1)	INLVLC6(1)	INLVLC5	INLVLC4	INLVLC3	INLVLC2	INLVLC1	INLVLC0	134
INTCON	GIE	PEIE	TMR0IE	INTE	IOCIE	TMR0IF	INTF	IOCIF	89
PIE1	TMR1GIE	ADIE	RCIE	TXIE	SSP1IE	CCP1IE	TMR2IE	TMR1IE	90
PIR1	TMR1GIF	ADIF	RCIF	TXIF	SSP1IF	CCP1IF	TMR2IF	TMR1IF	93
RCREG	EUSART Receive Data Register								290*
RCSTA	SPEN	RX9	SREN	CREN	ADDEN	FERR	OERR	RX9D	295
SPBRGL	BRG7	BRG6	BRG5	BRG4	BRG3	BRG2	BRG1	BRG0	297*
SPBRGH	BRG15	BRG14	BRG13	BRG12	BRG11	BRG10	BRG9	BRG8	297*
TRISA(3)	—	—	TRISA5	TRISA4	TRISA3	TRISA2	TRISA1	TRISA0	121
TRISB(1)	TRISB7	TRISB6	TRISB5	TRISB4	—	—	—	—	127
TRISC	TRISC7(1)	TRISC6(1)	TRISC5	TRISC4	TRISC3	TRISC2	TRISC1	TRISC0	127
TXSTA	CSRC	TX9	TXEN	SYNC	SENDB	BRGH	TRMT	TX9D	294

Legend: — = unimplemented location, read as '0'. Shaded cells are not used for asynchronous reception.

* Page provides register information.

Note 1: PIC16(L)F1828 only.

2: PIC16(L)F1824 only.

3: Unshaded cells apply to PIC16(L)F1828 only.

26.2 Clock Accuracy with Asynchronous Operation

The factory calibrates the internal oscillator block output (INTOSC). However, the INTOSC frequency may drift as VDD or temperature changes, and this directly affects the asynchronous baud rate. Two methods may be used to adjust the baud rate clock, but both require a reference clock source of some kind.

The first (preferred) method uses the OSCTUNE register to adjust the INTOSC output. Adjusting the value in the OSCTUNE register allows for fine resolution changes to the system clock source. See **Section 5.2.2 "Internal Clock Sources"** for more information.

The other method adjusts the value in the Baud Rate Generator. This can be done automatically with the Auto-Baud Detect feature (see **Section 26.3.1 "Auto-Baud Detect"**). There may not be fine enough resolution when adjusting the Baud Rate Generator to compensate for a gradual change in the peripheral clock frequency.

REGISTER 26-1: TXSTA: TRANSMIT STATUS AND CONTROL REGISTER

R/W-/0	R/W-0/0	R/W-0/0	R/W-0/0	R/W-0/0	R/W-0/0	R-1/1	R/W-0/0
CSRC	TX9	TXEN(1)	SYNC	SENDB	BRGH	TRMT	TX9D
bit 7							bit 0

Legend:		
R = Readable bit	W = Writable bit	U = Unimplemented bit, read as '0'
u = Bit is unchanged	x = Bit is unknown	-n/n = Value at POR and BOR/Value at all other Resets
'1' = Bit is set	'0' = Bit is cleared	

bit 7 **CSRC:** Clock Source Select bit
Asynchronous mode:
Don't care
Synchronous mode:
1 = Master mode (clock generated internally from BRG)
0 = Slave mode (clock from external source)

bit 6 **TX9:** 9-bit Transmit Enable bit
1 = Selects 9-bit transmission
0 = Selects 8-bit transmission

bit 5 **TXEN:** Transmit Enable bit(1)
1 = Transmit enabled
0 = Transmit disabled

bit 4 **SYNC:** EUSART Mode Select bit
1 = Synchronous mode
0 = Asynchronous mode

bit 3 **SENDB:** Send Break Character bit
Asynchronous mode:
1 = Send Sync Break on next transmission (cleared by hardware upon completion)
0 = Sync Break transmission completed
Synchronous mode:
Don't care

bit 2 **BRGH:** High Baud Rate Select bit
Asynchronous mode:
1 = High speed
0 = Low speed
Synchronous mode:
Unused in this mode

bit 1 **TRMT:** Transmit Shift Register Status bit
1 = TSR empty
0 = TSR full

bit 0 **TX9D:** Ninth bit of Transmit Data
Can be address/data bit or a parity bit.

Note 1: SREN/CREN overrides TXEN in Sync mode.

© 2010-2015 Microchip Technology Inc.

REGISTER 26-2: RCSTA: RECEIVE STATUS AND CONTROL REGISTER(1)

R/W-0/0	R/W-0/0	R/W-0/0	R/W-0/0	R/W-0/0	R-0/0	R-0/0	R-x/x
SPEN	RX9	SREN	CREN	ADDEN	FERR	OERR	RX9D
bit 7							bit 0

Legend:		
R = Readable bit	W = Writable bit	U = Unimplemented bit, read as '0'
u = Bit is unchanged	x = Bit is unknown	-n/n = Value at POR and BOR/Value at all other Resets
'1' = Bit is set	'0' = Bit is cleared	

bit 7 **SPEN:** Serial Port Enable bit
1 = Serial port enabled (configures RX/DT and TX/CK pins as serial port pins)
0 = Serial port disabled (held in Reset)

bit 6 **RX9:** 9-bit Receive Enable bit
1 = Selects 9-bit reception
0 = Selects 8-bit reception

bit 5 **SREN:** Single Receive Enable bit
Asynchronous mode:
Don't care
Synchronous mode – Master:
1 = Enables single receive
0 = Disables single receive
This bit is cleared after reception is complete.
Synchronous mode – Slave
Don't care

bit 4 **CREN:** Continuous Receive Enable bit
Asynchronous mode:
1 = Enables receiver
0 = Disables receiver
Synchronous mode:
1 = Enables continuous receive until enable bit CREN is cleared (CREN overrides SREN)
0 = Disables continuous receive

bit 3 **ADDEN:** Address Detect Enable bit
Asynchronous mode 9-bit (RX9 = 1):
1 = Enables address detection, enable interrupt and load the receive buffer when RSR<8> is set
0 = Disables address detection, all bytes are received and ninth bit can be used as parity bit
Asynchronous mode 8-bit (RX9 = 0):
Don't care

bit 2 **FERR:** Framing Error bit
1 = Framing error (can be updated by reading RCREG register and receive next valid byte)
0 = No framing error

bit 1 **OERR:** Overrun Error bit
1 = Overrun error (can be cleared by clearing bit CREN)
0 = No overrun error

bit 0 **RX9D:** Ninth bit of Received Data
This can be address/data bit or a parity bit and must be calculated by user firmware.

REGISTER 26-3: BAUDCON: BAUD RATE CONTROL REGISTER

R-0/0	R-1/1	U-0	R/W-0/0	R/W-0/0	U-0	R/W-0/0	R/W-0/0
ABDOVF	RCIDL	—	SCKP	BRG16	—	WUE	ABDEN
bit 7							bit 0

Legend:		
R = Readable bit	W = Writable bit	U = Unimplemented bit, read as '0'
u = Bit is unchanged	x = Bit is unknown	-n/n = Value at POR and BOR/Value at all other Resets
'1' = Bit is set	'0' = Bit is cleared	

bit 7 **ABDOVF:** Auto-Baud Detect Overflow bit
Asynchronous mode:
1 = Auto-baud timer overflowed
0 = Auto-baud timer did not overflow
Synchronous mode:
Don't care

bit 6 **RCIDL**: Receive Idle Flag bit
Asynchronous mode:
1 = Receiver is Idle
0 = Start bit has been received and the receiver is receiving
Synchronous mode:
Don't care

bit 5 **Unimplemented:** Read as '0'

bit 4 **SCKP**: Synchronous Clock Polarity Select bit
Asynchronous mode:
1 = Transmit inverted data to the TX/CK pin
0 = Transmit non-inverted data to the TX/CK pin
Synchronous mode:
1 = Data is clocked on rising edge of the clock
0 = Data is clocked on falling edge of the clock

bit 3 **BRG16:** 16-bit Baud Rate Generator bit
1 = 16-bit Baud Rate Generator is used
0 = 8-bit Baud Rate Generator is used

bit 2 **Unimplemented:** Read as '0'

bit 1 **WUE:** Wake-up Enable bit
Asynchronous mode:
1 = Receiver is waiting for a falling edge. No character will be received, byte RCIF will be set. WUE will automatically clear after RCIF is set.
0 = Receiver is operating normally
Synchronous mode:
Don't care

bit 0 **ABDEN**: Auto-Baud Detect Enable bit
Asynchronous mode:
1 = Auto-Baud Detect mode is enabled (clears when auto-baud is complete)
0 = Auto-Baud Detect mode is disabled
Synchronous mode:
Don't care

© 2010-2015 Microchip Technology Inc.

26.3 EUSART Baud Rate Generator (BRG)

The Baud Rate Generator (BRG) is an 8-bit or 16-bit timer that is dedicated to the support of both the asynchronous and synchronous EUSART operation. By default, the BRG operates in 8-bit mode. Setting the BRG16 bit of the BAUDCON register selects 16-bit mode.

The SPBRGH, SPBRGL register pair determines the period of the free running baud rate timer. In Asynchronous mode the multiplier of the baud rate period is determined by both the BRGH bit of the TXSTA register and the BRG16 bit of the BAUDCON register. In Synchronous mode, the BRGH bit is ignored.

Table 26-3 contains the formulas for determining the baud rate. Example 26-1 provides a sample calculation for determining the baud rate and baud rate error.

Typical baud rates and error values for various asynchronous modes have been computed for your convenience and are shown in Table 26-3. It may be advantageous to use the high baud rate (BRGH = 1), or the 16-bit BRG (BRG16 = 1) to reduce the baud rate error. The 16-bit BRG mode is used to achieve slow baud rates for fast oscillator frequencies.

Writing a new value to the SPBRGH, SPBRGL register pair causes the BRG timer to be reset (or cleared). This ensures that the BRG does not wait for a timer overflow before outputting the new baud rate.

If the system clock is changed during an active receive operation, a receive error or data loss may result. To avoid this problem, check the status of the RCIDL bit to make sure that the receive operation is Idle before changing the system clock.

EXAMPLE 26-1: CALCULATING BAUD RATE ERROR

For a device with FOSC of 16 MHz, desired baud rate of 9600, Asynchronous mode, 8-bit BRG:

$$Desired\ Baud\ Rate = \frac{FOSC}{64([SPBRGH:SPBRGL] + 1)}$$

Solving for SPBRGH:SPBRGL:

$$X = \frac{\frac{FOSC}{Desired\ Baud\ Rate}}{64} - 1$$

$$= \frac{\frac{16000000}{9600}}{64} - 1$$

$$= [25.042] = 25$$

$$Calculated\ Baud\ Rate = \frac{16000000}{64(25 + 1)}$$

$$= 9615$$

$$Error = \frac{Calc.\ Baud\ Rate - Desired\ Baud\ Rate}{Desired\ Baud\ Rate}$$

$$= \frac{(9615 - 9600)}{9600} = 0.16\%$$

TABLE 26-3: BAUD RATE FORMULAS

Configuration Bits			BRG/EUSART Mode	Baud Rate Formula
SYNC	BRG16	BRGH		
0	0	0	8-bit/Asynchronous	FOSC/[64 (n+1)]
0	0	1	8-bit/Asynchronous	FOSC/[16 (n+1)]
0	1	0	16-bit/Asynchronous	
0	1	1	16-bit/Asynchronous	FOSC/[4 (n+1)]
1	0	x	8-bit/Synchronous	
1	1	x	16-bit/Synchronous	

Legend: x = Don't care, n = value of SPBRGH, SPBRGL register pair

TABLE 26-4: SUMMARY OF REGISTERS ASSOCIATED WITH THE BAUD RATE GENERATOR

Name	Bit 7	Bit 6	Bit 5	Bit 4	Bit 3	Bit 2	Bit 1	Bit 0	Register on Page
BAUDCON	ABDOVF	RCIDL	—	SCKP	BRG16	—	WUE	ABDEN	296
RCSTA	SPEN	RX9	SREN	CREN	ADDEN	FERR	OERR	RX9D	295
SPBRGL	BRG7	BRG6	BRG5	BRG4	BRG3	BRG2	BRG1	BRG0	297*
SPBRGH	BRG15	BRG14	BRG13	BRG12	BRG11	BRG10	BRG9	BRG8	297*
TXSTA	CSRC	TX9	TXEN	SYNC	SENDB	BRGH	TRMT	TX9D	294

Legend: — = unimplemented location, read as '0'. Shaded cells are not used for the Baud Rate Generator.

* Page provides register information.

© 2010-2015 Microchip Technology Inc.

TABLE 26-5: BAUD RATES FOR ASYNCHRONOUS MODES

BAUD RATE	SYNC = 0, BRGH = 0, BRG16 = 0											
	Fosc = 32.000 MHz			Fosc = 20.000 MHz			Fosc = 18.432 MHz			Fosc = 11.0592 MHz		
	Actual Rate	% Error	SPBRG value (decimal)	Actual Rate	% Error	SPBRG value (decimal)	Actual Rate	% Error	SPBRG value (decimal)	Actual Rate	% Error	SPBRG value (decimal)
300	—	—	—	—	—	—	—	—	—	—	—	—
1200	—	—	—	1221	1.73	255	1200	0.00	239	1200	0.00	143
2400	2404	0.16	207	2404	0.16	129	2400	0.00	119	2400	0.00	71
9600	9615	0.16	51	9470	-1.36	32	9600	0.00	29	9600	0.00	17
10417	10417	0.00	47	10417	0.00	29	10286	-1.26	27	10165	-2.42	16
19.2k	19.23k	0.16	25	19.53k	1.73	15	19.20k	0.00	14	19.20k	0.00	8
57.6k	55.55k	-3.55	3	—	—	—	57.60k	0.00	7	57.60k	0.00	2
115.2k	—	—	—	—	—	—	—	—	—	—	—	—

BAUD RATE	SYNC = 0, BRGH = 0, BRG16 = 0											
	Fosc = 8.000 MHz			Fosc = 4.000 MHz			Fosc = 3.6864 MHz			Fosc = 1.000 MHz		
	Actual Rate	% Error	SPBRG value (decimal)	Actual Rate	% Error	SPBRG value (decimal)	Actual Rate	% Error	SPBRG value (decimal)	Actual Rate	% Error	SPBRG value (decimal)
300	—	—	—	300	0.16	207	300	0.00	191	300	0.16	51
1200	1202	0.16	103	1202	0.16	51	1200	0.00	47	1202	0.16	12
2400	2404	0.16	51	2404	0.16	25	2400	0.00	23	—	—	—
9600	9615	0.16	12	—	—	—	9600	0.00	5	—	—	—
10417	10417	0.00	11	10417	0.00	5	—	—	—	—	—	—
19.2k	—	—	—	—	—	—	19.20k	0.00	2	—	—	—
57.6k	—	—	—	—	—	—	57.60k	0.00	0	—	—	—
115.2k	—	—	—	—	—	—	—	—	—	—	—	—

BAUD RATE	SYNC = 0, BRGH = 1, BRG16 = 0											
	Fosc = 32.000 MHz			Fosc = 20.000 MHz			Fosc = 18.432 MHz			Fosc = 11.0592 MHz		
	Actual Rate	% Error	SPBRG value (decimal)	Actual Rate	% Error	SPBRG value (decimal)	Actual Rate	% Error	SPBRG value (decimal)	Actual Rate	% Error	SPBRG value (decimal)
300	—	—	—	—	—	—	—	—	—	—	—	—
1200	—	—	—	—	—	—	—	—	—	—	—	—
2400	—	—	—	—	—	—	—	—	—	—	—	—
9600	9615	0.16	207	9615	0.16	129	9600	0.00	119	9600	0.00	71
10417	10417	0.00	191	10417	0.00	119	10378	-0.37	110	10473	0.53	65
19.2k	19.23k	0.16	103	19.23k	0.16	64	19.20k	0.00	59	19.20k	0.00	35
57.6k	57.14k	-0.79	34	56.82k	-1.36	21	57.60k	0.00	19	57.60k	0.00	11
115.2k	117.64k	2.12	16	113.64k	-1.36	10	115.2k	0.00	9	115.2k	0.00	5

TABLE 26-5: BAUD RATES FOR ASYNCHRONOUS MODES (CONTINUED)

BAUD RATE	SYNC = 0, BRGH = 1, BRG16 = 0											
	Fosc = 8.000 MHz			Fosc = 4.000 MHz			Fosc = 3.6864 MHz			Fosc = 1.000 MHz		
	Actual Rate	% Error	SPBRG value (decimal)	Actual Rate	% Error	SPBRG value (decimal)	Actual Rate	% Error	SPBRG value (decimal)	Actual Rate	% Error	SPBRG value (decimal)
300	—	—	—	—	—	—	—	—	—	300	0.16	207
1200	—	—	—	1202	0.16	207	1200	0.00	191	1202	0.16	51
2400	2404	0.16	207	2404	0.16	103	2400	0.00	95	2404	0.16	25
9600	9615	0.16	51	9615	0.16	25	9600	0.00	23	—	—	—
10417	10417	0.00	47	10417	0.00	23	10473	0.53	21	10417	0.00	5
19.2k	19231	0.16	25	19.23k	0.16	12	19.2k	0.00	11	—	—	—
57.6k	55556	-3.55	8	—	—	—	57.60k	0.00	3	—	—	—
115.2k	—	—	—	—	—	—	115.2k	0.00	1	—	—	—

BAUD RATE	SYNC = 0, BRGH = 0, BRG16 = 1											
	Fosc = 32.000 MHz			Fosc = 20.000 MHz			Fosc = 18.432 MHz			Fosc = 11.0592 MHz		
	Actual Rate	% Error	SPBRG value (decimal)	Actual Rate	% Error	SPBRG value (decimal)	Actual Rate	% Error	SPBRG value (decimal)	Actual Rate	% Error	SPBRG value (decimal)
300	300.0	0.00	6666	300.0	-0.01	4166	300.0	0.00	3839	300.0	0.00	2303
1200	1200	-0.02	3332	1200	-0.03	1041	1200	0.00	959	1200	0.00	575
2400	2401	-0.04	832	2399	-0.03	520	2400	0.00	479	2400	0.00	287
9600	9615	0.16	207	9615	0.16	129	9600	0.00	119	9600	0.00	71
10417	10417	0.00	191	10417	0.00	119	10378	-0.37	110	10473	0.53	65
19.2k	19.23k	0.16	103	19.23k	0.16	64	19.20k	0.00	59	19.20k	0.00	35
57.6k	57.14k	-0.79	34	56.818	-1.36	21	57.60k	0.00	19	57.60k	0.00	11
115.2k	117.6k	2.12	16	113.636	-1.36	10	115.2k	0.00	9	115.2k	0.00	5

BAUD RATE	SYNC = 0, BRGH = 0, BRG16 = 1											
	Fosc = 8.000 MHz			Fosc = 4.000 MHz			Fosc = 3.6864 MHz			Fosc = 1.000 MHz		
	Actual Rate	% Error	SPBRG value (decimal)	Actual Rate	% Error	SPBRG value (decimal)	Actual Rate	% Error	SPBRG value (decimal)	Actual Rate	% Error	SPBRG value (decimal)
300	299.9	-0.02	1666	300.1	0.04	832	300.0	0.00	767	300.5	0.16	207
1200	1199	-0.08	416	1202	0.16	207	1200	0.00	191	1202	0.16	51
2400	2404	0.16	207	2404	0.16	103	2400	0.00	95	2404	0.16	25
9600	9615	0.16	51	9615	0.16	25	9600	0.00	23	—	—	—
10417	10417	0.00	47	10417	0.00	23	10473	0.53	21	10417	0.00	5
19.2k	19.23k	0.16	25	19.23k	0.16	12	19.20k	0.00	11	—	—	—
57.6k	55556	-3.55	8	—	—	—	57.60k	0.00	3	—	—	—
115.2k	—	—	—	—	—	—	115.2k	0.00	1	—	—	—

© 2010-2015 Microchip Technology Inc.

TABLE 26-5: BAUD RATES FOR ASYNCHRONOUS MODES (CONTINUED)

BAUD RATE	SYNC = 0, BRGH = 1, BRG16 = 1 or SYNC = 1, BRG16 = 1											
	FOSC = 32.000 MHz			FOSC = 20.000 MHz			FOSC = 18.432 MHz			FOSC = 11.0592 MHz		
	Actual Rate	% Error	SPBRG value (decimal)	Actual Rate	% Error	SPBRG value (decimal)	Actual Rate	% Error	SPBRG value (decimal)	Actual Rate	% Error	SPBRG value (decimal)
300	300.0	0.00	26666	300.0	0.00	16665	300.0	0.00	15359	300.0	0.00	9215
1200	1200	0.00	6666	1200	-0.01	4166	1200	0.00	3839	1200	0.00	2303
2400	2400	0.01	3332	2400	0.02	2082	2400	0.00	1919	2400	0.00	1151
9600	9604	0.04	832	9597	-0.03	520	9600	0.00	479	9600	0.00	287
10417	10417	0.00	767	10417	0.00	479	10425	0.08	441	10433	0.16	264
19.2k	19.18k	-0.08	416	19.23k	0.16	259	19.20k	0.00	239	19.20k	0.00	143
57.6k	57.55k	-0.08	138	57.47k	-0.22	86	57.60k	0.00	79	57.60k	0.00	47
115.2k	115.9k	0.64	68	116.3k	0.94	42	115.2k	0.00	39	115.2k	0.00	23

BAUD RATE	SYNC = 0, BRGH = 1, BRG16 = 1 or SYNC = 1, BRG16 = 1											
	FOSC = 8.000 MHz			FOSC = 4.000 MHz			FOSC = 3.6864 MHz			FOSC = 1.000 MHz		
	Actual Rate	% Error	SPBRG value (decimal)	Actual Rate	% Error	SPBRG value (decimal)	Actual Rate	% Error	SPBRG value (decimal)	Actual Rate	% Error	SPBRG value (decimal)
300	300.0	0.00	6666	300.0	0.01	3332	300.0	0.00	3071	300.1	0.04	832
1200	1200	-0.02	1666	1200	0.04	832	1200	0.00	767	1202	0.16	207
2400	2401	0.04	832	2398	0.08	416	2400	0.00	383	2404	0.16	103
9600	9615	0.16	207	9615	0.16	103	9600	0.00	95	9615	0.16	25
10417	10417	0	191	10417	0.00	95	10473	0.53	87	10417	0.00	23
19.2k	19.23k	0.16	103	19.23k	0.16	51	19.20k	0.00	47	19.23k	0.16	12
57.6k	57.14k	-0.79	34	58.82k	2.12	16	57.60k	0.00	15	—	—	—
115.2k	117.6k	2.12	16	111.1k	-3.55	8	115.2k	0.00	7	—	—	—

26.3.1 AUTO-BAUD DETECT

The EUSART module supports automatic detection and calibration of the baud rate.

In the Auto-Baud Detect (ABD) mode, the clock to the BRG is reversed. Rather than the BRG clocking the incoming RX signal, the RX signal is timing the BRG. The Baud Rate Generator is used to time the period of a received 55h (ASCII "U") which is the Sync character for the LIN bus. The unique feature of this character is that it has five rising edges including the Stop bit edge.

Setting the ABDEN bit of the BAUDCON register starts the auto-baud calibration sequence (Figure 26-6). While the ABD sequence takes place, the EUSART state machine is held in Idle. On the first rising edge of the receive line, after the Start bit, the SPBRG begins counting up using the BRG counter clock as shown in Table 26-6. The fifth rising edge will occur on the RX pin at the end of the eighth bit period. At that time, an accumulated value totaling the proper BRG period is left in the SPBRGH, SPBRGL register pair, the ABDEN bit is automatically cleared and the RCIF interrupt flag is set. The value in the RCREG needs to be read to clear the RCIF interrupt. RCREG content should be discarded. When calibrating for modes that do not use the SPBRGH register the user can verify that the SPBRGL register did not overflow by checking for 00h in the SPBRGH register.

The BRG auto-baud clock is determined by the BRG16 and BRGH bits as shown in Table 26-6. During ABD, both the SPBRGH and SPBRGL registers are used as a 16-bit counter, independent of the BRG16 bit setting. While calibrating the baud rate period, the SPBRGH and SPBRGL registers are clocked at 1/8th the BRG base clock rate. The resulting byte measurement is the average bit time when clocked at full speed.

Note 1: If the WUE bit is set with the ABDEN bit, auto-baud detection will occur on the byte following the Break character (see **Section 26.3.3 "Auto-Wake-up on Break"**).

2: It is up to the user to determine that the incoming character baud rate is within the range of the selected BRG clock source. Some combinations of oscillator frequency and EUSART baud rates are not possible.

3: During the auto-baud process, the auto-baud counter starts counting at 1. Upon completion of the auto-baud sequence, to achieve maximum accuracy, subtract 1 from the SPBRGH:SPBRGL register pair.

TABLE 26-6: BRG COUNTER CLOCK RATES

BRG16	BRGH	BRG Base Clock	BRG ABD Clock
0	0	FOSC/64	FOSC/512
0	1	FOSC/16	FOSC/128
1	0	FOSC/16	FOSC/128
1	1	FOSC/4	FOSC/32

Note: During the ABD sequence, SPBRGL and SPBRGH registers are both used as a 16-bit counter, independent of BRG16 setting.

FIGURE 26-6: AUTOMATIC BAUD RATE CALIBRATION

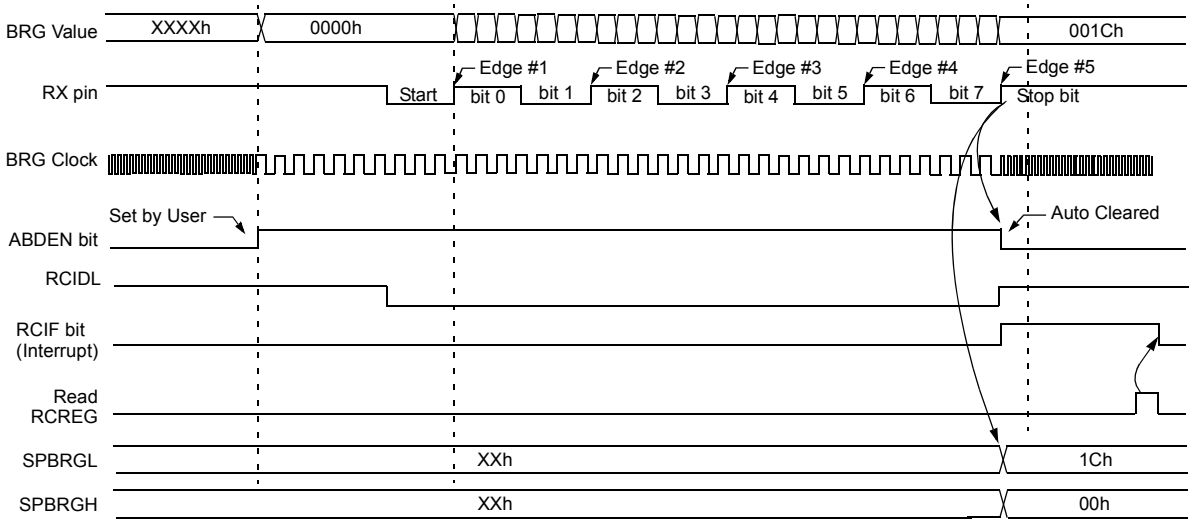

Note 1: The ABD sequence requires the **EUSART** module to be configured in Asynchronous mode.

© 2010-2015 Microchip Technology Inc.

26.3.2 AUTO-BAUD OVERFLOW

During the course of automatic baud detection, the ABDOVF bit of the BAUDCON register will be set if the baud rate counter overflows before the fifth rising edge is detected on the RX pin. The ABDOVF bit indicates that the counter has exceeded the maximum count that can fit in the 16 bits of the SPBRGH:SPBRGL register pair. After the ABDOVF has been set, the counter continues to count until the fifth rising edge is detected on the RX pin. Upon detecting the fifth RX edge, the hardware will set the RCIF interrupt flag and clear the ABDEN bit of the BAUDCON register. The RCIF flag can be subsequently cleared by reading the RCREG register. The ABDOVF flag of the BAUDCON register can be cleared by software directly.

To terminate the auto-baud process before the RCIF flag is set, clear the ABDEN bit then clear the ABDOVF bit of the BAUDCON register. The ABDOVF bit will remain set if the ABDEN bit is not cleared first.

26.3.3 AUTO-WAKE-UP ON BREAK

During Sleep mode, all clocks to the EUSART are suspended. Because of this, the Baud Rate Generator is inactive and a proper character reception cannot be performed. The Auto-Wake-up feature allows the controller to wake-up due to activity on the RX/DT line. This feature is available only in Asynchronous mode.

The Auto-Wake-up feature is enabled by setting the WUE bit of the BAUDCON register. Once set, the normal receive sequence on RX/DT is disabled, and the EUSART remains in an Idle state, monitoring for a wake-up event independent of the CPU mode. A wake-up event consists of a high-to-low transition on the RX/DT line. (This coincides with the start of a Sync Break or a wake-up signal character for the LIN protocol.)

The EUSART module generates an RCIF interrupt coincident with the wake-up event. The interrupt is generated synchronously to the Q clocks in normal CPU operating modes (Figure 26-7), and asynchronously if the device is in Sleep mode (Figure 26-8). The interrupt condition is cleared by reading the RCREG register.

The WUE bit is automatically cleared by the low-to-high transition on the RX line at the end of the Break. This signals to the user that the Break event is over. At this point, the EUSART module is in Idle mode waiting to receive the next character.

26.3.3.1 Special Considerations

Break Character

To avoid character errors or character fragments during a wake-up event, the wake-up character must be all zeros.

When the wake-up is enabled the function works independent of the low time on the data stream. If the WUE bit is set and a valid non-zero character is received, the low time from the Start bit to the first rising edge will be interpreted as the wake-up event. The remaining bits in the character will be received as a fragmented character and subsequent characters can result in framing or overrun errors.

Therefore, the initial character in the transmission must be all ‘0’s. This must be ten or more bit times, 13-bit times recommended for LIN bus, or any number of bit times for standard RS-232 devices.

Oscillator Startup Time

Oscillator start-up time must be considered, especially in applications using oscillators with longer start-up intervals (i.e., LP, XT or HS/PLL mode). The Sync Break (or wake-up signal) character must be of sufficient length, and be followed by a sufficient interval, to allow enough time for the selected oscillator to start and provide proper initialization of the EUSART.

WUE Bit

The wake-up event causes a receive interrupt by setting the RCIF bit. The WUE bit is cleared in hardware by a rising edge on RX/DT. The interrupt condition is then cleared in software by reading the RCREG register and discarding its contents.

To ensure that no actual data is lost, check the RCIDL bit to verify that a receive operation is not in process before setting the WUE bit. If a receive operation is not occurring, the WUE bit may then be set just prior to entering the Sleep mode.

FIGURE 26-7: AUTO-WAKE-UP BIT (WUE) TIMING DURING NORMAL OPERATION

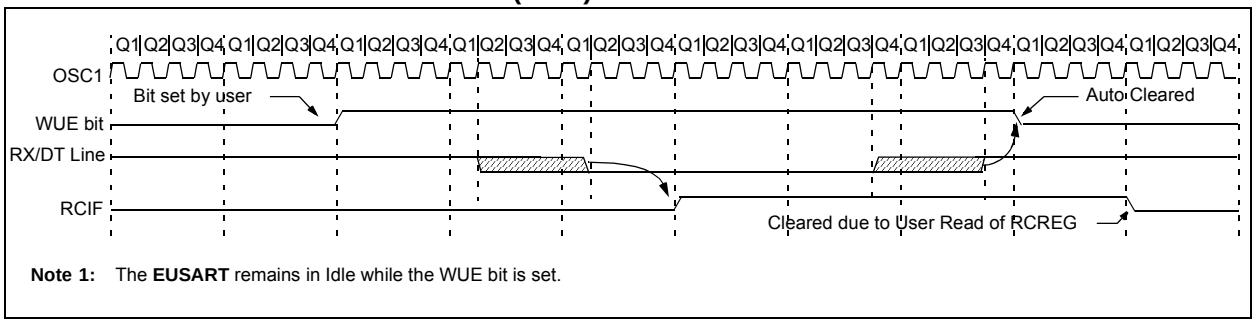

Note 1: The **EUSART** remains in Idle while the WUE bit is set.

FIGURE 26-8: AUTO-WAKE-UP BIT (WUE) TIMINGS DURING SLEEP

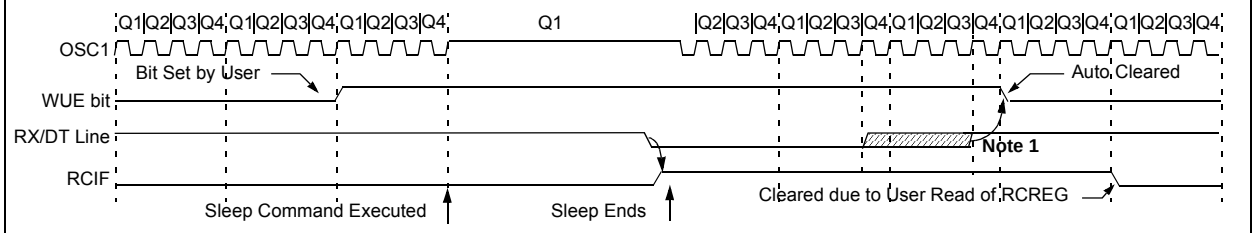

Note 1: If the wake-up event requires long oscillator warm-up time, the automatic clearing of the WUE bit can occur while the `stposc` signal is still active. This sequence should not depend on the presence of Q clocks.

2: The **EUSART** remains in Idle while the WUE bit is set.

© 2010-2015 Microchip Technology Inc.

26.3.4 BREAK CHARACTER SEQUENCE

The EUSART module has the capability of sending the special Break character sequences that are required by the LIN bus standard. A Break character consists of a Start bit, followed by 12 '0' bits and a Stop bit.

To send a Break character, set the SENDB and TXEN bits of the TXSTA register. The Break character transmission is then initiated by a write to the TXREG. The value of data written to TXREG will be ignored and all '0's will be transmitted.

The SENDB bit is automatically reset by hardware after the corresponding Stop bit is sent. This allows the user to preload the transmit FIFO with the next transmit byte following the Break character (typically, the Sync character in the LIN specification).

The TRMT bit of the TXSTA register indicates when the transmit operation is active or Idle, just as it does during normal transmission. See Figure 26-9 for the timing of the Break character sequence.

26.3.4.1 Break and Sync Transmit Sequence

The following sequence will start a message frame header made up of a Break, followed by an auto-baud Sync byte. This sequence is typical of a LIN bus master.

1. Configure the EUSART for the desired mode.
2. Set the TXEN and SENDB bits to enable the Break sequence.
3. Load the TXREG with a dummy character to initiate transmission (the value is ignored).
4. Write '55h' to TXREG to load the Sync character into the transmit FIFO buffer.
5. After the Break has been sent, the SENDB bit is reset by hardware and the Sync character is then transmitted.

When the TXREG becomes empty, as indicated by the TXIF, the next data byte can be written to TXREG.

26.3.5 RECEIVING A BREAK CHARACTER

The Enhanced EUSART module can receive a Break character in two ways.

The first method to detect a Break character uses the FERR bit of the RCSTA register and the Received data as indicated by RCREG. The Baud Rate Generator is assumed to have been initialized to the expected baud rate.

A Break character has been received when;

- RCIF bit is set
- FERR bit is set
- RCREG = 00h

The second method uses the Auto-Wake-up feature described in **Section 26.3.3 "Auto-Wake-up on Break"**. By enabling this feature, the EUSART will sample the next two transitions on RX/DT, cause an RCIF interrupt, and receive the next data byte followed by another interrupt.

Note that following a Break character, the user will typically want to enable the Auto-Baud Detect feature. For both methods, the user can set the ABDEN bit of the BAUDCON register before placing the EUSART in Sleep mode.

FIGURE 26-9: SEND BREAK CHARACTER SEQUENCE

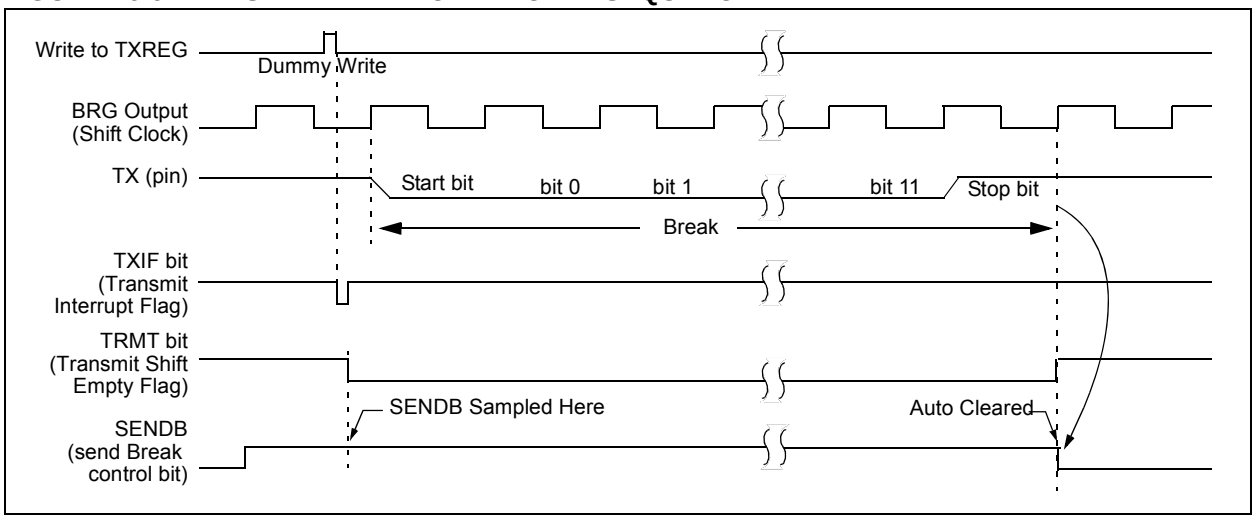

26.4 EUSART Synchronous Mode

Synchronous serial communications are typically used in systems with a single master and one or more slaves. The master device contains the necessary circuitry for baud rate generation and supplies the clock for all devices in the system. Slave devices can take advantage of the master clock by eliminating the internal clock generation circuitry.

There are two signal lines in Synchronous mode: a bidirectional data line and a clock line. Slaves use the external clock supplied by the master to shift the serial data into and out of their respective receive and transmit shift registers. Since the data line is bidirectional, synchronous operation is half-duplex only. Half-duplex refers to the fact that master and slave devices can receive and transmit data but not both simultaneously. The EUSART can operate as either a master or slave device.

Start and Stop bits are not used in synchronous transmissions.

26.4.1 SYNCHRONOUS MASTER MODE

The following bits are used to configure the EUSART for Synchronous Master operation:

- SYNC = 1
- CSRC = 1
- SREN = 0 (for transmit); SREN = 1 (for receive)
- CREN = 0 (for transmit); CREN = 1 (for receive)
- SPEN = 1

Setting the SYNC bit of the TXSTA register configures the device for synchronous operation. Setting the CSRC bit of the TXSTA register configures the device as a master. Clearing the SREN and CREN bits of the RCSTA register ensures that the device is in the Transmit mode, otherwise the device will be configured to receive. Setting the SPEN bit of the RCSTA register enables the EUSART.

26.4.1.1 Master Clock

Synchronous data transfers use a separate clock line, which is synchronous with the data. A device configured as a master transmits the clock on the TX/CK line. The TX/CK pin output driver is automatically enabled when the EUSART is configured for synchronous transmit or receive operation. Serial data bits change on the leading edge to ensure they are valid at the trailing edge of each clock. One clock cycle is generated for each data bit. Only as many clock cycles are generated as there are data bits.

26.4.1.2 Clock Polarity

A clock polarity option is provided for Microwire compatibility. Clock polarity is selected with the SCKP bit of the BAUDCON register. Setting the SCKP bit sets the clock Idle state as high. When the SCKP bit is set, the data changes on the falling edge of each clock. Clearing the SCKP bit sets the Idle state as low. When the SCKP bit is cleared, the data changes on the rising edge of each clock.

26.4.1.3 Synchronous Master Transmission

Data is transferred out of the device on the RX/DT pin. The RX/DT and TX/CK pin output drivers are automatically enabled when the EUSART is configured for synchronous master transmit operation.

A transmission is initiated by writing a character to the TXREG register. If the TSR still contains all or part of a previous character the new character data is held in the TXREG until the last bit of the previous character has been transmitted. If this is the first character, or the previous character has been completely flushed from the TSR, the data in the TXREG is immediately transferred to the TSR. The transmission of the character commences immediately following the transfer of the data to the TSR from the TXREG.

Each data bit changes on the leading edge of the master clock and remains valid until the subsequent leading clock edge.

Note:	The TSR register is not mapped in data memory, so it is not available to the user.

26.4.1.4 Synchronous Master Transmission Setup:

1. Initialize the SPBRGH, SPBRGL register pair and the BRGH and BRG16 bits to achieve the desired baud rate (see **Section 26.3 "EUSART Baud Rate Generator (BRG)"**).
2. Enable the synchronous master serial port by setting bits SYNC, SPEN and CSRC.
3. Disable Receive mode by clearing bits SREN and CREN.
4. Enable Transmit mode by setting the TXEN bit.
5. If 9-bit transmission is desired, set the TX9 bit.
6. If interrupts are desired, set the TXIE bit of the PIE1 register and the GIE and PEIE bits of the INTCON register.
7. If 9-bit transmission is selected, the ninth bit should be loaded in the TX9D bit.
8. Start transmission by loading data to the TXREG register.

© 2010-2015 Microchip Technology Inc.

FIGURE 26-10: SYNCHRONOUS TRANSMISSION

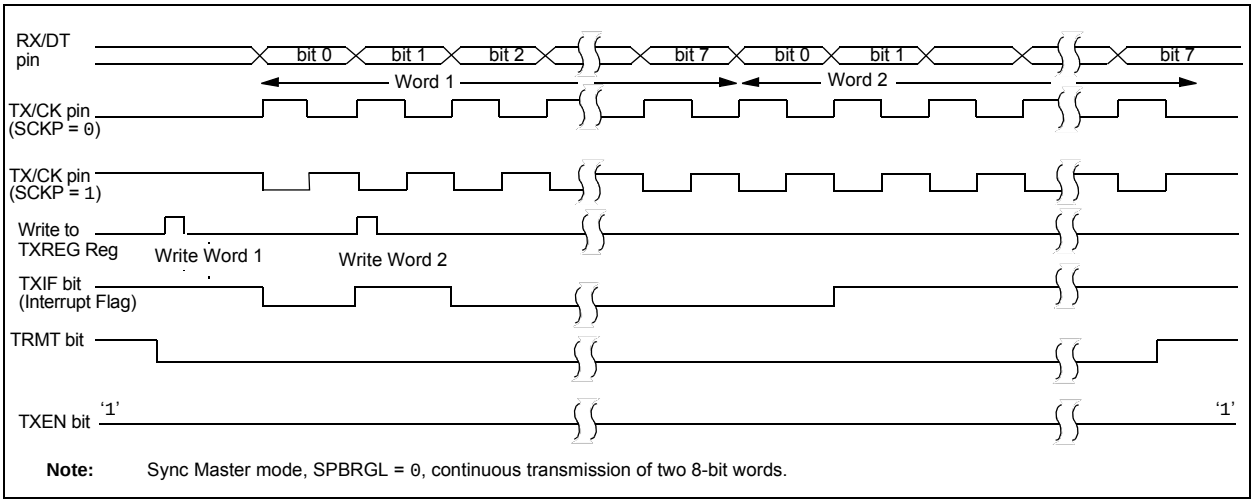

Note: Sync Master mode, SPBRGL = 0, continuous transmission of two 8-bit words.

FIGURE 26-11: SYNCHRONOUS TRANSMISSION (THROUGH TXEN)

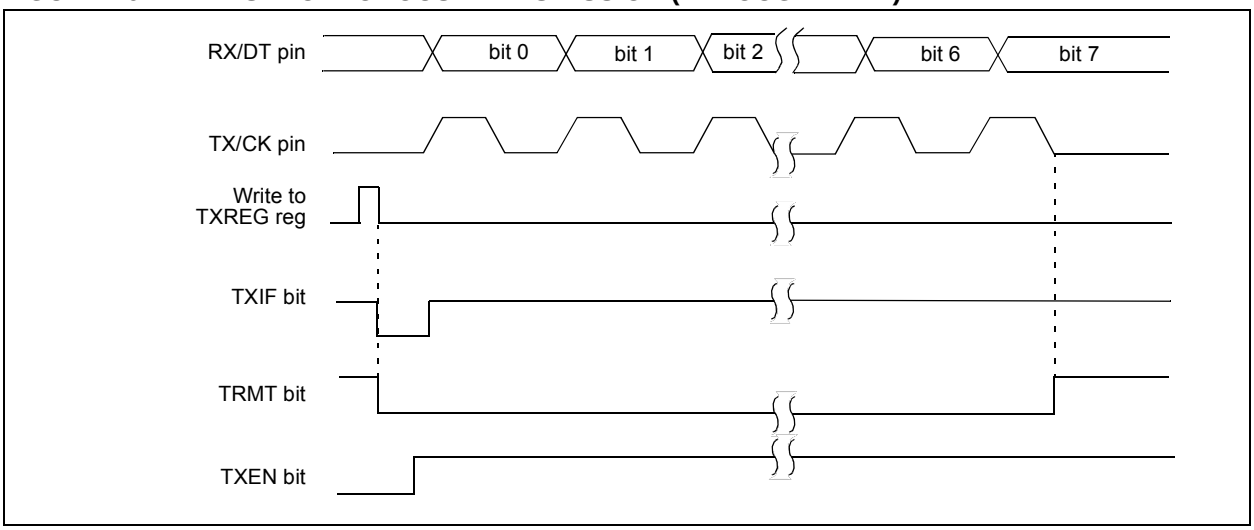

TABLE 26-7: SUMMARY OF REGISTERS ASSOCIATED WITH SYNCHRONOUS MASTER TRANSMISSION

Name	Bit 7	Bit 6	Bit 5	Bit 4	Bit 3	Bit 2	Bit 1	Bit 0	Register on Page
APFCON0	RXDTSEL	SDOSEL(1)	SSSEL(1)	—	T1GSEL	TXCKSEL	—	—	117
BAUDCON	ABDOVF	RCIDL	—	SCKP	BRG16	—	WUE	ABDEN	296
INTCON	GIE	PEIE	TMR0IE	INTE	IOCIE	TMR0IF	INTF	IOCIF	89
PIE1	TMR1GIE	ADIE	RCIE	TXIE	SSP1IE	CCP1IE	TMR2IE	TMR1IE	90
PIR1	TMR1GIF	ADIF	RCIF	TXIF	SSP1IF	CCP1IF	TMR2IF	TMR1IF	93
RCSTA	SPEN	RX9	SREN	CREN	ADDEN	FERR	OERR	RX9D	295
SPBRGL	BRG7	BRG6	BRG5	BRG4	BRG3	BRG2	BRG1	BRG0	297*
SPBRGH	BRG15	BRG14	BRG13	BRG12	BRG11	BRG10	BRG9	BRG8	297*
TXREG	EUSART Transmit Data Register								287*
TXSTA	CSRC	TX9	TXEN	SYNC	SENDB	BRGH	TRMT	TX9D	294

Legend: — = unimplemented location, read as '0'. Shaded cells are not used for synchronous master transmission.
* Page provides register information.
Note 1: PIC16(L)F1824 only.

26.4.1.5 Synchronous Master Reception

Data is received at the RX/DT pin. The RX/DT pin output driver is automatically disabled when the EUSART is configured for synchronous master receive operation.

In Synchronous mode, reception is enabled by setting either the Single Receive Enable bit (SREN of the RCSTA register) or the Continuous Receive Enable bit (CREN of the RCSTA register).

When SREN is set and CREN is clear, only as many clock cycles are generated as there are data bits in a single character. The SREN bit is automatically cleared at the completion of one character. When CREN is set, clocks are continuously generated until CREN is cleared. If CREN is cleared in the middle of a character the CK clock stops immediately and the partial character is discarded. If SREN and CREN are both set, then SREN is cleared at the completion of the first character and CREN takes precedence.

To initiate reception, set either SREN or CREN. Data is sampled at the RX/DT pin on the trailing edge of the TX/CK clock pin and is shifted into the Receive Shift Register (RSR). When a complete character is received into the RSR, the RCIF bit is set and the character is automatically transferred to the two character receive FIFO. The Least Significant eight bits of the top character in the receive FIFO are available in RCREG. The RCIF bit remains set as long as there are unread characters in the receive FIFO.

Note:	If the RX/DT function is on an analog pin, the corresponding ANSEL bit must be cleared for the receiver to function.

26.4.1.6 Slave Clock

Synchronous data transfers use a separate clock line, which is synchronous with the data. A device configured as a slave receives the clock on the TX/CK line. The TX/CK pin output driver is automatically disabled when the device is configured for synchronous slave transmit or receive operation. Serial data bits change on the leading edge to ensure they are valid at the trailing edge of each clock. One data bit is transferred for each clock cycle. Only as many clock cycles should be received as there are data bits.

Note:	If the device is configured as a slave and the TX/CK function is on an analog pin, the corresponding ANSEL bit must be cleared.

26.4.1.7 Receive Overrun Error

The receive FIFO buffer can hold two characters. An overrun error will be generated if a third character, in its entirety, is received before RCREG is read to access the FIFO. When this happens the OERR bit of the RCSTA register is set. Previous data in the FIFO will not be overwritten. The two characters in the FIFO buffer can be read, however, no additional characters will be received until the error is cleared. The OERR bit can only be cleared by clearing the overrun condition. If the overrun error occurred when the SREN bit is set and CREN is clear then the error is cleared by reading RCREG. If the overrun occurred when the CREN bit is set then the error condition is cleared by either clearing the CREN bit of the RCSTA register or by clearing the SPEN bit which resets the EUSART.

26.4.1.8 Receiving 9-bit Characters

The EUSART supports 9-bit character reception. When the RX9 bit of the RCSTA register is set the EUSART will shift 9-bits into the RSR for each character received. The RX9D bit of the RCSTA register is the ninth, and Most Significant, data bit of the top unread character in the receive FIFO. When reading 9-bit data from the receive FIFO buffer, the RX9D data bit must be read before reading the eight Least Significant bits from the RCREG.

26.4.1.9 Synchronous Master Reception Setup:

1. Initialize the SPBRGH, SPBRGL register pair for the appropriate baud rate. Set or clear the BRGH and BRG16 bits, as required, to achieve the desired baud rate.
2. Clear the ANSEL bit for the RX pin (if applicable).
3. Enable the synchronous master serial port by setting bits SYNC, SPEN and CSRC.
4. Ensure bits CREN and SREN are clear.
5. If interrupts are desired, set the RCIE bit of the PIE1 register and the GIE and PEIE bits of the INTCON register.
6. If 9-bit reception is desired, set bit RX9.
7. Start reception by setting the SREN bit or for continuous reception, set the CREN bit.
8. Interrupt flag bit RCIF will be set when reception of a character is complete. An interrupt will be generated if the enable bit RCIE was set.
9. Read the RCSTA register to get the ninth bit (if enabled) and determine if any error occurred during reception.
10. Read the 8-bit received data by reading the RCREG register.
11. If an overrun error occurs, clear the error by either clearing the CREN bit of the RCSTA register or by clearing the SPEN bit which resets the EUSART.

© 2010-2015 Microchip Technology Inc.

FIGURE 26-12: SYNCHRONOUS RECEPTION (MASTER MODE, SREN)

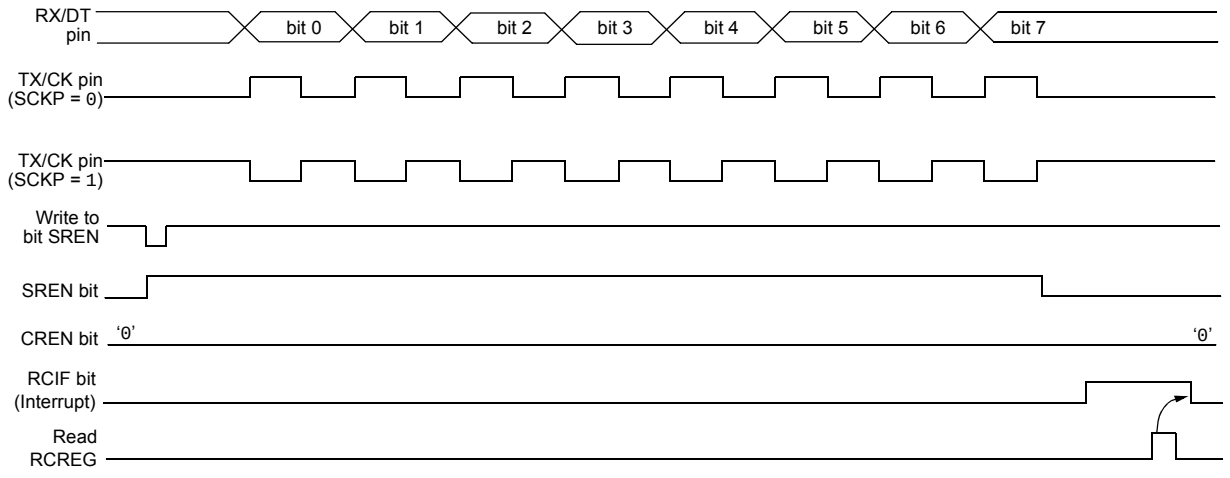

Note: Timing diagram demonstrates Sync Master mode with bit SREN = 1 and bit BRGH = 0.

TABLE 26-8: SUMMARY OF REGISTERS ASSOCIATED WITH SYNCHRONOUS MASTER RECEPTION

Name	Bit 7	Bit 6	Bit 5	Bit 4	Bit 3	Bit 2	Bit 1	Bit 0	Register on Page
APFCON0	RXDTSEL	SDOSEL(1)	SSSEL(1)	—	T1GSEL	TXCKSEL	—	—	117
BAUDCON	ABDOVF	RCIDL	—	SCKP	BRG16	—	WUE	ABDEN	296
INTCON	GIE	PEIE	TMR0IE	INTE	IOCIE	TMR0IF	INTF	IOCIF	89
PIE1	TMR1GIE	ADIE	RCIE	TXIE	SSP1IE	CCP1IE	TMR2IE	TMR1IE	90
PIR1	TMR1GIF	ADIF	RCIF	TXIF	SSP1IF	CCP1IF	TMR2IF	TMR1IF	93
RCREG	EUSART Receive Data Register								290*
RCSTA	SPEN	RX9	SREN	CREN	ADDEN	FERR	OERR	RX9D	295
SPBRGL	BRG7	BRG6	BRG5	BRG4	BRG3	BRG2	BRG1	BRG0	297*
SPBRGH	BRG15	BRG14	BRG13	BRG12	BRG11	BRG10	BRG9	BRG8	297*
TXSTA	CSRC	TX9	TXEN	SYNC	SENDB	BRGH	TRMT	TX9D	294

Legend: — = unimplemented location, read as '0'. Shaded cells are not used for synchronous master reception.

* Page provides register information.

Note 1: PIC16(L)F1824 only.

26.4.2 SYNCHRONOUS SLAVE MODE

The following bits are used to configure the EUSART for Synchronous slave operation:

- SYNC = 1
- CSRC = 0
- SREN = 0 (for transmit); SREN = 1 (for receive)
- CREN = 0 (for transmit); CREN = 1 (for receive)
- SPEN = 1

Setting the SYNC bit of the TXSTA register configures the device for synchronous operation. Clearing the CSRC bit of the TXSTA register configures the device as a slave. Clearing the SREN and CREN bits of the RCSTA register ensures that the device is in the Transmit mode, otherwise the device will be configured to receive. Setting the SPEN bit of the RCSTA register enables the EUSART.

26.4.2.1 EUSART Synchronous Slave Transmit

The operation of the Synchronous Master and Slave modes are identical (see **Section 26.4.1.3 "Synchronous Master Transmission"**), except in the case of the Sleep mode.

If two words are written to the TXREG and then the SLEEP instruction is executed, the following will occur:

1. The first character will immediately transfer to the TSR register and transmit.
2. The second word will remain in the TXREG register.
3. The TXIF bit will not be set.
4. After the first character has been shifted out of TSR, the TXREG register will transfer the second character to the TSR and the TXIF bit will now be set.
5. If the PEIE and TXIE bits are set, the interrupt will wake the device from Sleep and execute the next instruction. If the GIE bit is also set, the program will call the Interrupt Service Routine.

26.4.2.2 Synchronous Slave Transmission Setup:

1. Set the SYNC and SPEN bits and clear the CSRC bit.
2. Clear the ANSEL bit for the CK pin (if applicable).
3. Clear the CREN and SREN bits.
4. If interrupts are desired, set the TXIE bit of the PIE1 register and the GIE and PEIE bits of the INTCON register.
5. If 9-bit transmission is desired, set the TX9 bit.
6. Enable transmission by setting the TXEN bit.
7. If 9-bit transmission is selected, insert the Most Significant bit into the TX9D bit.
8. Start transmission by writing the Least Significant eight bits to the TXREG register.

TABLE 26-9: SUMMARY OF REGISTERS ASSOCIATED WITH SYNCHRONOUS SLAVE TRANSMISSION

Name	Bit 7	Bit 6	Bit 5	Bit 4	Bit 3	Bit 2	Bit 1	Bit 0	Register on Page
APFCON0	RXDTSEL	SDOSEL(1)	SSSEL(1)	—	T1GSEL	TXCKSEL	—	—	117
BAUDCON	ABDOVF	RCIDL	—	SCKP	BRG16	—	WUE	ABDEN	296
INTCON	GIE	PEIE	TMR0IE	INTE	IOCIE	TMR0IF	INTF	IOCIF	89
PIE1	TMR1GIE	ADIE	RCIE	TXIE	SSP1IE	CCP1IE	TMR2IE	TMR1IE	90
PIR1	TMR1GIF	ADIF	RCIF	TXIF	SSP1IF	CCP1IF	TMR2IF	TMR1IF	93
RCSTA	SPEN	RX9	SREN	CREN	ADDEN	FERR	OERR	RX9D	295
TXREG	EUSART Transmit Data Register								287*
TXSTA	CSRC	TX9	TXEN	SYNC	SENDB	BRGH	TRMT	TX9D	294

Legend: — = unimplemented location, read as '0'. Shaded cells are not used for synchronous slave transmission.
* Page provides register information.
Note 1: PIC16(L)F1824 only.

© 2010-2015 Microchip Technology Inc.

26.4.2.3 EUSART Synchronous Slave Reception

The operation of the Synchronous Master and Slave modes is identical (**Section 26.4.1.5 "Synchronous Master Reception"**), with the following exceptions:

- Sleep
- CREN bit is always set, therefore the receiver is never Idle
- SREN bit, which is a "don't care" in Slave mode

A character may be received while in Sleep mode by setting the CREN bit prior to entering Sleep. Once the word is received, the RSR register will transfer the data to the RCREG register. If the RCIE enable bit is set, the interrupt generated will wake the device from Sleep and execute the next instruction. If the GIE bit is also set, the program will branch to the interrupt vector.

26.4.2.4 Synchronous Slave Reception Setup:

1. Set the SYNC and SPEN bits and clear the CSRC bit.
2. Clear the ANSEL bit for both the CK and DT pins (if applicable).
3. If interrupts are desired, set the RCIE bit of the PIE1 register and the GIE and PEIE bits of the INTCON register.
4. If 9-bit reception is desired, set the RX9 bit.
5. Set the CREN bit to enable reception.
6. The RCIF bit will be set when reception is complete. An interrupt will be generated if the RCIE bit was set.
7. If 9-bit mode is enabled, retrieve the Most Significant bit from the RX9D bit of the RCSTA register.
8. Retrieve the eight Least Significant bits from the receive FIFO by reading the RCREG register.
9. If an overrun error occurs, clear the error by either clearing the CREN bit of the RCSTA register or by clearing the SPEN bit which resets the EUSART.

TABLE 26-10: SUMMARY OF REGISTERS ASSOCIATED WITH SYNCHRONOUS SLAVE RECEPTION

Name	Bit 7	Bit 6	Bit 5	Bit 4	Bit 3	Bit 2	Bit 1	Bit 0	Register on Page
APFCON0	RXDTSEL	SDOSEL(1)	SSSEL(1)	—	T1GSEL	TXCKSEL	—	—	117
BAUDCON	ABDOVF	RCIDL	—	SCKP	BRG16	—	WUE	ABDEN	296
INTCON	GIE	PEIE	TMR0IE	INTE	IOCIE	TMR0IF	INTF	IOCIF	89
PIE1	TMR1GIE	ADIE	RCIE	TXIE	SSP1IE	CCP1IE	TMR2IE	TMR1IE	90
PIR1	TMR1GIF	ADIF	RCIF	TXIF	SSP1IF	CCP1IF	TMR2IF	TMR1IF	93
RCREG	EUSART Receive Data Register								290*
RCSTA	SPEN	RX9	SREN	CREN	ADDEN	FERR	OERR	RX9D	295
TXSTA	CSRC	TX9	TXEN	SYNC	SENDB	BRGH	TRMT	TX9D	294

Legend: — = unimplemented location, read as '0'. Shaded cells are not used for synchronous slave reception.

* Page provides register information.

Note 1: PIC16(L)F1824 only.

26.5 EUSART Operation During Sleep

The EUSART will remain active during Sleep only in the Synchronous Slave mode. All other modes require the system clock and therefore cannot generate the necessary signals to run the Transmit or Receive Shift registers during Sleep.

Synchronous Slave mode uses an externally generated clock to run the Transmit and Receive Shift registers.

26.5.1 SYNCHRONOUS RECEIVE DURING SLEEP

To receive during Sleep, all the following conditions must be met before entering Sleep mode:

- RCSTA and TXSTA Control registers must be configured for Synchronous Slave Reception (see **Section 26.4.2.4 "Synchronous Slave Reception Setup:"**).
- If interrupts are desired, set the RCIE bit of the PIE1 register and the GIE and PEIE bits of the INTCON register.
- The RCIF interrupt flag must be cleared by reading RCREG to unload any pending characters in the receive buffer.

Upon entering Sleep mode, the device will be ready to accept data and clocks on the RX/DT and TX/CK pins, respectively. When the data word has been completely clocked in by the external device, the RCIF interrupt flag bit of the PIR1 register will be set. Thereby, waking the processor from Sleep.

Upon waking from Sleep, the instruction following the SLEEP instruction will be executed. If the Global Interrupt Enable (GIE) bit of the INTCON register is also set, then the Interrupt Service Routine at address 004h will be called.

26.5.2 SYNCHRONOUS TRANSMIT DURING SLEEP

To transmit during Sleep, all the following conditions must be met before entering Sleep mode:

- RCSTA and TXSTA Control registers must be configured for Synchronous Slave Transmission (see **Section 26.4.2.2 "Synchronous Slave Transmission Setup:"**).
- The TXIF interrupt flag must be cleared by writing the output data to the TXREG, thereby filling the TSR and transmit buffer.
- If interrupts are desired, set the TXIE bit of the PIE1 register and the PEIE bit of the INTCON register.
- Interrupt enable bits TXIE of the PIE1 register and PEIE of the INTCON register must set.

Upon entering Sleep mode, the device will be ready to accept clocks on the TX/CK pin and transmit data on the RX/DT pin. When the data word in the TSR has been completely clocked out by the external device, the pending byte in the TXREG will transfer to the TSR and the TXIF flag will be set. Thereby, waking the processor from Sleep. At this point, the TXREG is available to accept another character for transmission, which will clear the TXIF flag.

Upon waking from Sleep, the instruction following the SLEEP instruction will be executed. If the Global Interrupt Enable (GIE) bit is also set then the Interrupt Service Routine at address 0004h will be called.

26.5.3 ALTERNATE PIN LOCATIONS

This module incorporates I/O pins that can be moved to other locations with the use of the alternate pin function registers, APFCON0 and APFCON1. To determine which pins can be moved and what their default locations are upon a Reset, see **Section 12.1 "Alternate Pin Function"** for more information.

© 2010-2015 Microchip Technology Inc.

27.0 CAPACITIVE SENSING (CPS) MODULE

The Capacitive Sensing (CPS) module allows for an interaction with an end user without a mechanical interface. In a typical application, the CPS module is attached to a pad on a Printed Circuit Board (PCB), which is electrically isolated from the end user. When the end user places their finger over the PCB pad, a capacitive load is added, causing a frequency shift in the capacitive sensing module. The CPS module requires software and at least one timer resource to determine the change in frequency. Key features of this module include:

- Analog MUX for monitoring multiple inputs
- Capacitive sensing oscillator
- Multiple current ranges
- Multiple voltage reference modes
- Multiple timer resources
- Software control
- Operation during Sleep

FIGURE 27-1: CAPACITIVE SENSING BLOCK DIAGRAM

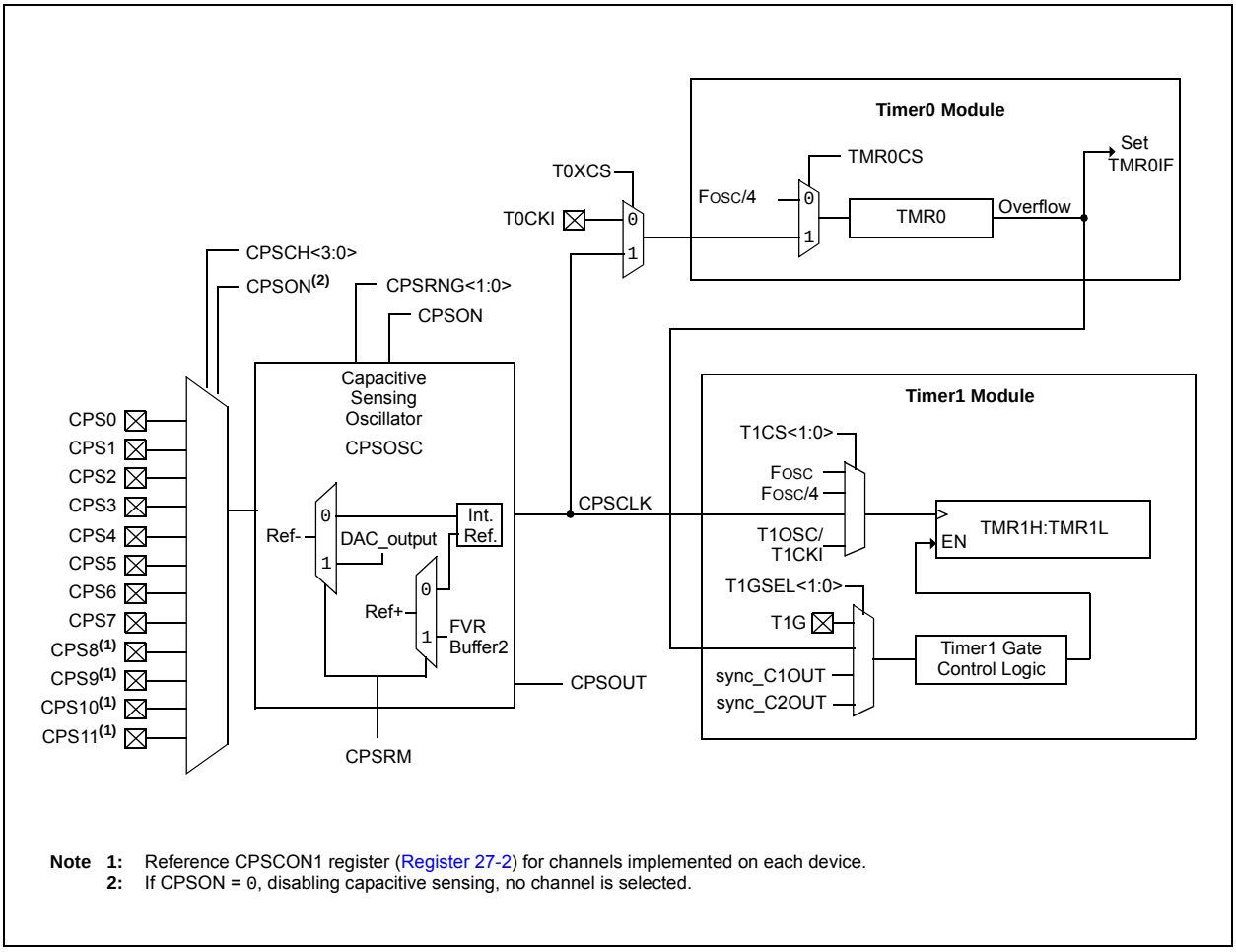

Note 1: Reference CPSCON1 register (Register 27-2) for channels implemented on each device.
2: If CPSON = 0, disabling capacitive sensing, no channel is selected.

FIGURE 27-2: CAPACITIVE SENSING OSCILLATOR BLOCK DIAGRAM

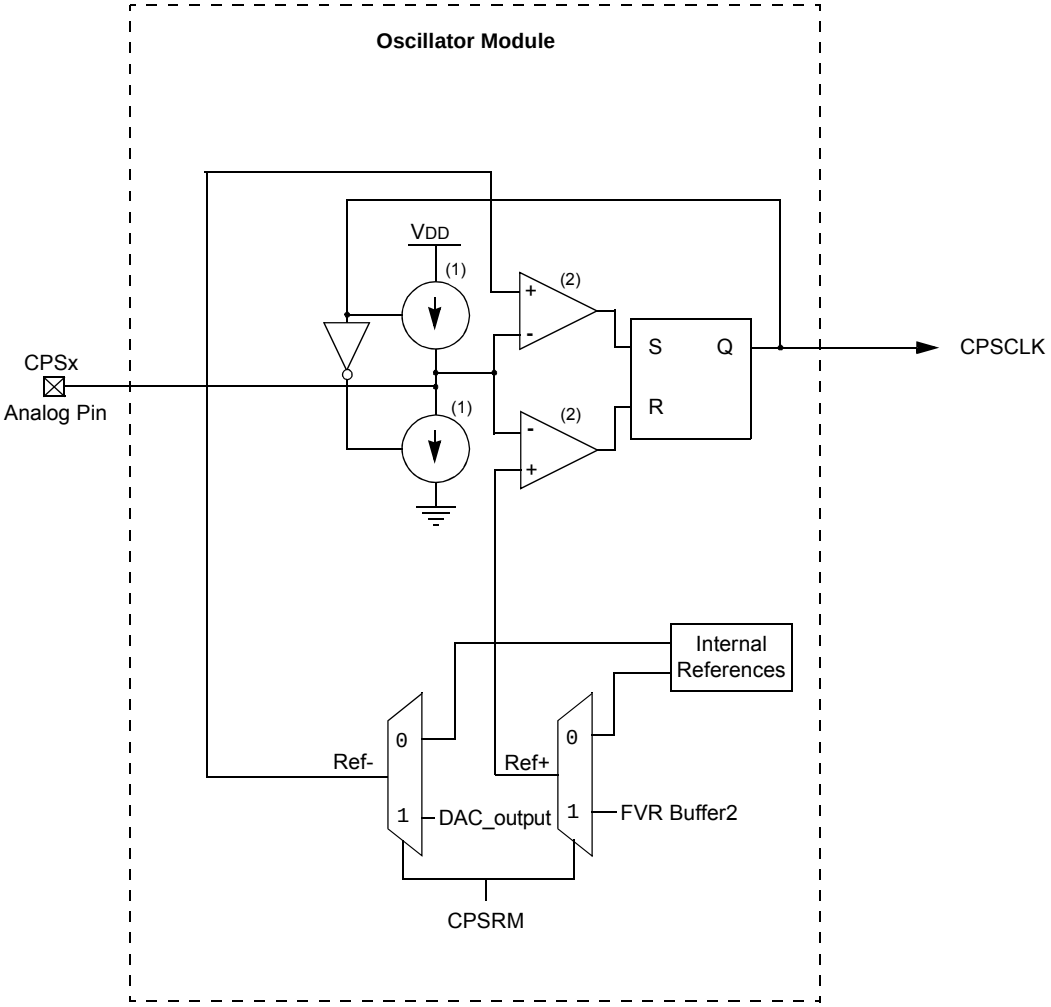

Note 1: Module Enable and Current mode selections are not shown.
2: Comparators remain active in Noise Detection mode.

© 2010-2015 Microchip Technology Inc.

27.1 Analog MUX

The capacitive sensing module can monitor up to eight inputs for the PIC16(L)F1824 (CPSCH<2:0>) and up to 12 inputs for the PIC16(L)F1828 (CPSCH<3:0>). See Register 27-2 for details. To determine if a frequency change has occurred the user must:

- Select the appropriate CPS pin by setting the appropriate CPSCH bits of the CPSCON1 register
- Set the corresponding ANSEL bit
- Set the corresponding TRIS bit
- Run the software algorithm

Selection of the CPSx pin while the module is enabled will cause the capacitive sensing oscillator to be on the CPSx pin. Failure to set the corresponding ANSEL and TRIS bits can cause the capacitive sensing oscillator to stop, leading to false frequency readings.

27.2 Capacitive Sensing Oscillator

The capacitive sensing oscillator consists of a constant current source and a constant current sink, to produce a triangle waveform. The CPSOUT bit of the CPSCON0 register shows the status of the capacitive sensing oscillator, whether it is a sinking or sourcing current. The oscillator is designed to drive a capacitive load (single PCB pad) and at the same time, be a clock source to either Timer0 or Timer1. The oscillator has three different current settings as defined by CPSRNG<1:0> of the CPSCON0 register. The different current settings for the oscillator serve two purposes:

- Maximize the number of counts in a timer for a fixed time base.
- Maximize the count differential in the timer during a change in frequency.

27.3 Voltage Reference Modes

The capacitive sensing oscillator uses voltage references to provide two voltage thresholds for oscillation. The upper voltage threshold is referred to as Ref+ and the lower voltage threshold is referred to as Ref-.

The user can elect to use Fixed Voltage References, which are internal to the capacitive sensing oscillator, or variable voltage references, which are supplied by the Fixed Voltage Reference (FVR) module and the Digital-to-Analog Converter (DAC) module.

When the Fixed Voltage References are used, the V_{SS} voltage determines the lower threshold level (Ref-) and the V_{DD} voltage determines the upper threshold level (Ref+).

When the variable voltage references are used, the DAC voltage determines the lower threshold level (Ref-) and the FVR voltage determines the upper threshold level (Ref+). An advantage of using these reference sources is that oscillation frequency remains constant with changes in V_{DD}.

Different oscillation frequencies can be obtained through the use of these variable voltage references. The more the upper voltage reference level is lowered and the more the lower voltage reference level is raised, the higher the capacitive sensing oscillator frequency becomes.

Selection between the voltage references is controlled by the CPSRM bit of the CPSCON0 register. Setting this bit selects the variable voltage references and clearing this bit selects the Fixed Voltage References.

Please see **Section 14.0 “Fixed Voltage Reference (FVR)”** and **Section 17.0 “Digital-to-Analog Converter (DAC) Module”** for more information on configuring the variable voltage levels.

27.4 Current Ranges

The Capacitive Sensing Oscillator can operate within several different current ranges, depending on the Voltage Reference mode and current range selections. Within each of the two Voltage Reference modes there are four current ranges.

Selection between the Voltage Reference modes is controlled by the CPSRM bit of the CPSCON0 register. Clearing this bit selects the Fixed Voltage References provided by the Capacitive Sensing Oscillator module. Setting this bit selects the variable voltage references supplied by the Fixed Voltage Reference (FVR) module and the Digital-to-Analog Converter (DAC) module. See **Section 27.3 "Voltage Reference Modes"** for more information on configuring the voltage references. Selecting the current range within the voltage reference mode is controlled by configuring the CPSRNG<1:0> bits in the CPSCON0 register. See Table 27-1 for proper current mode selection.

The Noise Detection mode is unique in that it disables the constant current source associated with the selected input pin, but leaves the rest of the oscillator circuitry and pin structure active. This eliminates the oscillation frequency on the analog pin and greatly reduces the current consumed by the Oscillator module. When noise is introduced onto the pin, the oscillator is driven at the frequency determined by the noise. This produces a detectable signal at the comparator stage, indicating the presence of activity on the pin. Figure 27-2 shows a more detailed drawing of the constant current sources and comparators associated with the oscillator and input pin.

TABLE 27-1: CURRENT MODE SELECTION

CPSRM	Voltage Reference Mode	CPSRNG<1:0>	Current Range(1)
0	Fixed	00	Off
		01	Low
		10	Medium
		11	High
1	Variable	00	Noise Detection
		01	Low
		10	Medium
		11	High

Note 1: See Power-Down Currents (IPD) in **Section 30.3 "DC Characteristics: PIC16(L)F1824/8-I/E (Power-Down)"** for more information.

© 2010-2015 Microchip Technology Inc.

27.5 Timer Resources

To measure the change in frequency of the capacitive sensing oscillator, a fixed time base is required. For the period of the fixed time base, the capacitive sensing oscillator is used to clock either Timer0 or Timer1. The frequency of the capacitive sensing oscillator is equal to the number of counts in the timer divided by the period of the fixed time base.

27.6 Fixed Time Base

To measure the frequency of the capacitive sensing oscillator, a fixed time base is required. Any timer resource or software loop can be used to establish the fixed time base. It is up to the end user to determine the method in which the fixed time base is generated.

Note:	The fixed time base can not be generated by the timer resource that the capacitive sensing oscillator is clocking.

27.6.1 TIMER0

To select Timer0 as the timer resource for the capacitive sensing module:

- Set the T0XCS bit of the CPSCON0 register
- Clear the TMR0CS bit of the OPTION_REG register

When Timer0 is chosen as the timer resource, the capacitive sensing oscillator will be the clock source for Timer0. Refer to **Section 20.0 "Timer0 Module"** for additional information.

27.6.2 TIMER1

To select Timer1 as the timer resource for the capacitive sensing module, set the TMR1CS<1:0> of the T1CON register to '11'. When Timer1 is chosen as the timer resource, the capacitive sensing oscillator will be the clock source for Timer1. Because the Timer1 module has a gate control, developing a time base for the frequency measurement can be simplified by using the Timer0 overflow flag.

It is recommend that the Timer0 overflow flag, in conjunction with the Toggle mode of the Timer1 Gate, be used to develop the fixed time base required by the software portion of the capacitive sensing module. Refer to **Section 20.1.2 "8-bit Counter Mode"** for additional information.

TABLE 27-2: TIMER1 ENABLE FUNCTION

TMR1ON	TMR1GE	Timer1 Operation
0	0	Off
0	1	Off
1	0	On
1	1	Count Enabled by input

27.7 Software Control

The software portion of the capacitive sensing module is required to determine the change in frequency of the capacitive sensing oscillator. This is accomplished by the following:

- Setting a fixed time base to acquire counts on Timer0 or Timer1
- Establishing the nominal frequency for the capacitive sensing oscillator
- Establishing the reduced frequency for the capacitive sensing oscillator due to an additional capacitive load
- Set the frequency threshold

27.7.1 NOMINAL FREQUENCY (NO CAPACITIVE LOAD)

To determine the nominal frequency of the capacitive sensing oscillator:

- Remove any extra capacitive load on the selected CPSx pin
- At the start of the fixed time base, clear the timer resource
- At the end of the fixed time base save the value in the timer resource

The value of the timer resource is the number of oscillations of the capacitive sensing oscillator for the given time base. The frequency of the capacitive sensing oscillator is equal to the number of counts on in the timer divided by the period of the fixed time base.

27.7.2 REDUCED FREQUENCY (ADDITIONAL CAPACITIVE LOAD)

The extra capacitive load will cause the frequency of the capacitive sensing oscillator to decrease. To determine the reduced frequency of the capacitive sensing oscillator:

- Add a typical capacitive load on the selected CPSx pin
- Use the same fixed time base as the nominal frequency measurement
- At the start of the fixed time base, clear the timer resource
- At the end of the fixed time base save the value in the timer resource

The value of the timer resource is the number of oscillations of the capacitive sensing oscillator with an additional capacitive load. The frequency of the capacitive sensing oscillator is equal to the number of counts on in the timer divided by the period of the fixed time base. This frequency should be less than the value obtained during the nominal frequency measurement.

27.7.3 FREQUENCY THRESHOLD

The frequency threshold should be placed midway between the value of nominal frequency and the reduced frequency of the capacitive sensing oscillator. Refer to Application Note AN1103, "*Software Handling for Capacitive Sensing*" (DS01103) for more detailed information on the software required for capacitive sensing module.

Note:	For more information on general capacitive sensing refer to Application Notes: • AN1101, "*Introduction to Capacitive Sensing*" (DS01101) • AN1102, "*Layout and Physical Design Guidelines for Capacitive Sensing*" (DS01102)

27.8 Operation during Sleep

The capacitive sensing oscillator will continue to run as long as the module is enabled, independent of the part being in Sleep. In order for the software to determine if a frequency change has occurred, the part must be awake. However, the part does not have to be awake when the timer resource is acquiring counts.

Note:	Timer0 does not operate when in Sleep, and therefore cannot be used for capacitive sense measurements in Sleep.

© 2010-2015 Microchip Technology Inc.

REGISTER 27-1: CPSCON0: CAPACITIVE SENSING CONTROL REGISTER 0

R/W-0/0	R/W-0/0	U-0	U-0	R/W-0/0	R/W-0/0	R-0/0	R/W-0/0
CPSON	CPSRM	—	—	CPSRNG<1:0>		CPSOUT	T0XCS
bit 7							bit 0

Legend:		
R = Readable bit	W = Writable bit	U = Unimplemented bit, read as '0'
u = Bit is unchanged	x = Bit is unknown	-n/n = Value at POR and BOR/Value at all other Resets
'1' = Bit is set	'0' = Bit is cleared	

bit 7 **CPSON:** Capacitive Sensing Module Enable bit
1 = CPS module is enabled
0 = CPS module is disabled

bit 6 **CPSRM:** Capacitive Sensing Reference Mode bit
1 = Capacitive Sensing module is in Variable Voltage Reference mode.
0 = Capacitive Sensing module is in Fixed Voltage Reference mode..

bit 5-4 **Unimplemented:** Read as '0'

bit 3-2 **CPSRNG<1:0>:** Capacitive Sensing Current Range bits
If CPSRM = 0 (Fixed Voltage Reference mode):
00 = Oscillator is off
01 = Oscillator is in low range
10 = Oscillator is in medium range
11 = Oscillator is in high range

If CPSRM = 1 (Variable Voltage Reference mode):
00 = Oscillator is on. Noise Detection mode. No Charge/Discharge current is supplied.
01 = Oscillator is in low range
10 = Oscillator is in medium range
11 = Oscillator is in high range

bit 1 **CPSOUT:** Capacitive Sensing Oscillator Status bit
1 = Oscillator is sourcing current (Current flowing out of the pin)
0 = Oscillator is sinking current (Current flowing into the pin)

bit 0 **T0XCS:** Timer0 External Clock Source Select bit
If TMR0CS = 1:
The T0XCS bit controls which clock external to the core/Timer0 module supplies Timer0:
1 = Timer0 clock source is the capacitive sensing oscillator
0 = Timer0 clock source is the T0CKI pin
If TMR0CS = 0:
Timer0 clock source is controlled by the core/Timer0 module and is FOSC/4

REGISTER 27-2: CPSCON1: CAPACITIVE SENSING CONTROL REGISTER 1

U-0	U-0	U-0	U-0	R/W-0/0[1]	R/W-0/0	R/W-0/0	R/W-0/0
—	—	—	—	CPSCH<3:0>			
bit 7							bit 0

Legend:		
R = Readable bit	W = Writable bit	U = Unimplemented bit, read as '0'
u = Bit is unchanged	x = Bit is unknown	-n/n = Value at POR and BOR/Value at all other Resets
'1' = Bit is set	'0' = Bit is cleared	

bit 7-4 **Unimplemented:** Read as '0'

bit 3-0 **CPSCH<3:0>:** Capacitive Sensing Channel Select bits

If CPSON = 0:

These bits are ignored. No channel is selected.

If CPSON = 1:

0000 = channel 0, (CPS0)
0001 = channel 1, (CPS1)
0010 = channel 2, (CPS2)
0011 = channel 3, (CPS3)
0100 = channel 4, (CPS4)
0101 = channel 5, (CPS5)
0110 = channel 6, (CPS6)
0111 = channel 7, (CPS7)
1000 = channel 8, (CPS8)[1]
1001 = channel 9, (CPS9)[1]
1010 = channel 10, (CPS10)[1]
1011 = channel 11, (CPS11)[1]
1100 = Reserved. Do not use.
•
•
•
1111 = Reserved. Do not use.

Note 1: These channels are only implemented on the PIC16(L)F1828.

TABLE 27-3: SUMMARY OF REGISTERS ASSOCIATED WITH CAPACITIVE SENSING

Name	Bit 7	Bit 6	Bit 5	Bit 4	Bit 3	Bit 2	Bit 1	Bit 0	Register on Page
ANSELA	—	—	—	ANSA4	—	ANSA2	ANSA1	ANSA0	122
ANSELC	ANSC7	ANSC6	—	—	ANSC3	ANSC2	ANSC1	ANSC0	133
CPSCON0	CPSON	CPSRM	—	—	CPSRNG<1:0>		CPSOUT	T0XCS	319
CPSCON1	—	—	—	—	CPSCH<3:0>				320
INLVLA	—	—	INLVLA5	INLVLA4	INLVLA3	INLVLA2	INLVLA1	INLVLA0	123
INLVLB[1]	INLVLB7	INLVLB6	INLVLB5	INLVLB4	—	—	—	—	128
INLVLC	INLVLC7[1]	INLVLC6[1]	INLVLC5	INLVLC4	INLVLC3	INLVLC2	INLVLC1	INLVLC0	134
INTCON	GIE	PEIE	TMR0IE	INTE	IOCIE	TMR0IF	INTF	IOCIF	89
OPTION_REG	$\overline{\text{WPUEN}}$	INTEDG	TMR0CS	TMR0SE	PSA	PS2	PS1	PS0	176
T1CON	TMR1CS1	TMR1CS0	T1CKPS1	T1CKPS0	T1OSCEN	$\overline{\text{T1SYNC}}$	—	TMR1ON	186
TRISA	—	—	TRISA5	TRISA4	TRISA3	TRISA2	TRISA1	TRISA0	121
TRISB[1]	TRISB7	TRISB6	TRISB5	TRISB4	—	—	—	—	127
TRISC	TRISC7[1]	TRISC6[1]	TRISC5	TRISC4	TRISC3	TRISC2	TRISC1	TRISC0	132

Legend: — = Unimplemented locations, read as '0'. Shaded cells are not used by the capacitive sensing module.
Note 1: PIC16(L)F1828 only.

© 2010-2015 Microchip Technology Inc.

28.0 IN-CIRCUIT SERIAL PROGRAMMING™ (ICSP™)

ICSP™ programming allows customers to manufacture circuit boards with unprogrammed devices. Programming can be done after the assembly process allowing the device to be programmed with the most recent firmware or a custom firmware. Five pins are needed for ICSP™ programming:

- ICSPCLK
- ICSPDAT
- $\overline{\text{MCLR}}/V_{PP}$
- V_{DD}
- V_{SS}

In Program/Verify mode the Program Memory, User IDs and the Configuration Words are programmed through serial communications. The ICSPDAT pin is a bidirectional I/O used for transferring the serial data and the ICSPCLK pin is the clock input. For more information on ICSP™ refer to the "*PIC16F/LF182X/PIC12F/LF1822 Memory Programming Specification*" (DS41390).

28.1 High-Voltage Programming Entry Mode

The device is placed into High-Voltage Programming Entry mode by holding the ICSPCLK and ICSPDAT pins low then raising the voltage on $\overline{\text{MCLR}}/V_{PP}$ to V_{IHH}.

Some programmers produce V_{PP} greater than V_{IHH} (9.0V), an external circuit is required to limit the V_{PP} voltage. See Figure 28-1 for example circuit.

FIGURE 28-1: VPP LIMITER EXAMPLE CIRCUIT

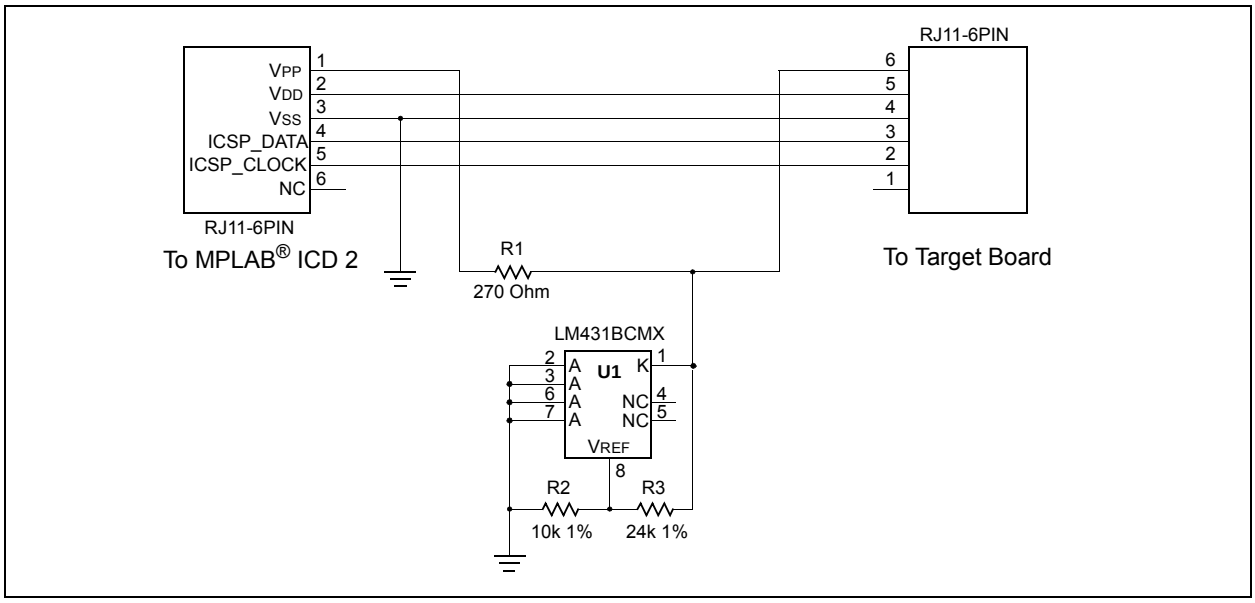

Note: The MPLAB ICD 2 produces a V_{PP} voltage greater than the maximum V_{PP} specification of the PIC16(L)F1824/8.

28.2 Low-Voltage Programming Entry Mode

The Low-Voltage Programming Entry mode allows the PIC16(L)F1824/8 devices to be programmed using VDD only, without high voltage. When the LVP bit of Configuration Word 2 is set to '1', the low-voltage ICSP programming entry is enabled. To disable the Low-Voltage ICSP mode, the LVP bit must be programmed to '0'.

Entry into the Low-Voltage Programming Entry mode requires the following steps:

1. $\overline{MCLR}$ is brought to VIL.
2. A 32-bit key sequence is presented on ICSPDAT, while clocking ICSPCLK.

Once the key sequence is complete, $\overline{MCLR}$ must be held at VIL for as long as Program/Verify mode is to be maintained.

If low-voltage programming is enabled (LVP = 1), the $\overline{MCLR}$ Reset function is automatically enabled and cannot be disabled. See **Section 7.3 "MCLR"** for more information.

The LVP bit can only be reprogrammed to '0' by using the High-Voltage Programming mode.

28.3 Common Programming Interfaces

Connection to a target device is typically done through an ICSP™ header. A commonly found connector on development tools is the RJ-11 in the 6P6C (6 pin, 6 connector) configuration. See Figure 28-2.

FIGURE 28-2: ICD RJ-11 STYLE CONNECTOR INTERFACE

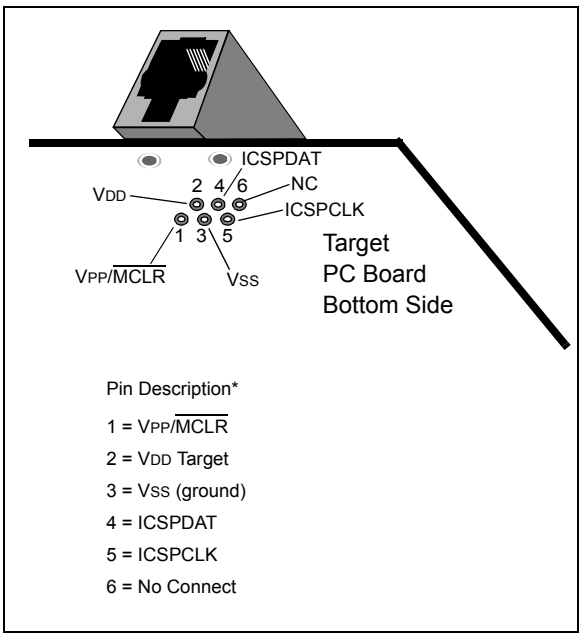

Another connector often found in use with the PICkit™ programmers is a standard 6-pin header with 0.1 inch spacing. Refer to Figure 28-3.

FIGURE 28-3: PICkit™ STYLE CONNECTOR INTERFACE

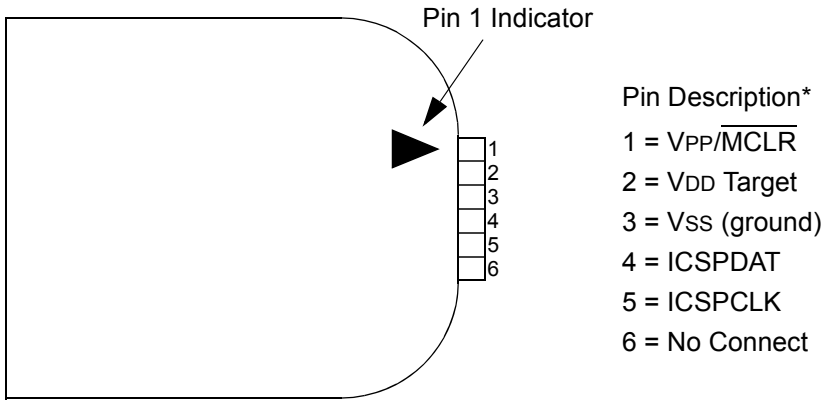

* The 6-pin header (0.100" spacing) accepts 0.025" square pins.

© 2010-2015 Microchip Technology Inc.

For additional interface recommendations, refer to your specific device programmer manual prior to PCB design.

It is recommended that isolation devices be used to separate the programming pins from other circuitry. The type of isolation is highly dependent on the specific application and may include devices such as resistors, diodes, or even jumpers. See Figure 28-4 for more information.

FIGURE 28-4: TYPICAL CONNECTION FOR ICSP™ PROGRAMMING

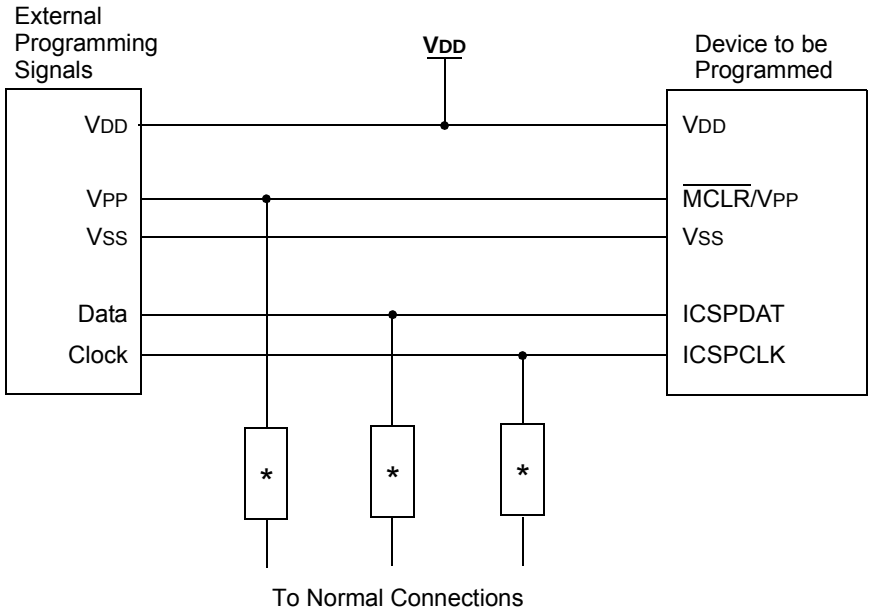

* Isolation devices (as required).

29.0 INSTRUCTION SET SUMMARY

Each PIC16 instruction is a 14-bit word containing the operation code (opcode) and all required operands. The opcodes are broken into three broad categories.

- Byte Oriented
- Bit Oriented
- Literal and Control

The literal and control category contains the most varied instruction word format.

Table 29-3 lists the instructions recognized by the MPASM™ assembler.

All instructions are executed within a single instruction cycle, with the following exceptions, which may take two or three cycles:

- Subroutine takes two cycles (CALL, CALLW)
- Returns from interrupts or subroutines take two cycles (RETURN, RETLW, RETFIE)
- Program branching takes two cycles (GOTO, BRA, BRW, BTFSS, BTFSC, DECFSZ, INCSFZ)
- One additional instruction cycle will be used when any instruction references an indirect file register and the file select register is pointing to program memory.

One instruction cycle consists of 4 oscillator cycles; for an oscillator frequency of 4 MHz, this gives a nominal instruction execution rate of 1 MHz.

All instruction examples use the format '0xhh' to represent a hexadecimal number, where 'h' signifies a hexadecimal digit.

29.1 Read-Modify-Write Operations

Any instruction that specifies a file register as part of the instruction performs a Read-Modify-Write (R-M-W) operation. The register is read, the data is modified, and the result is stored according to either the instruction, or the destination designator 'd'. A read operation is performed on a register even if the instruction writes to that register.

TABLE 29-1: OPCODE FIELD DESCRIPTIONS

Field	Description
f	Register file address (0x00 to 0x7F)
W	Working register (accumulator)
b	Bit address within an 8-bit file register
k	Literal field, constant data or label
x	Don't care location (= 0 or 1). The assembler will generate code with x = 0. It is the recommended form of use for compatibility with all Microchip software tools.
d	Destination select; d = 0: store result in W, d = 1: store result in file register f. Default is d = 1.
n	FSR or INDF number. (0-1)
mm	Pre-post increment-decrement mode selection

TABLE 29-2: ABBREVIATION DESCRIPTIONS

Field	Description
PC	Program Counter
$\overline{TO}$	Time-out bit
C	Carry bit
DC	Digit carry bit
Z	Zero bit
$\overline{PD}$	Power-down bit

© 2010-2015 Microchip Technology Inc.

FIGURE 29-1: GENERAL FORMAT FOR INSTRUCTIONS

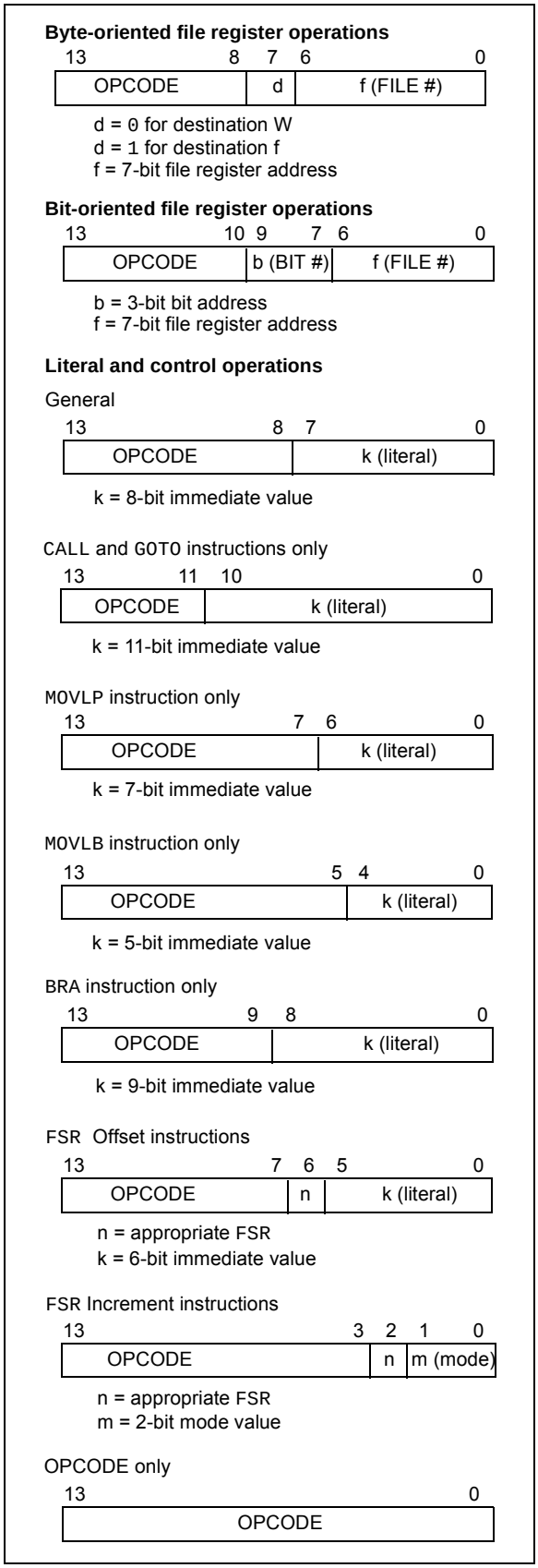

TABLE 29-3: PIC16F/LF1824/1828 ENHANCED INSTRUCTION SET

Mnemonic, Operands		Description	Cycles	14-Bit Opcode MSb			LSb	Status Affected	Notes
BYTE-ORIENTED FILE REGISTER OPERATIONS									
ADDWF	f, d	Add W and f	1	00	0111	dfff	ffff	C, DC, Z	**2**
ADDWFC	f, d	Add with Carry W and f	1	11	1101	dfff	ffff	C, DC, Z	**2**
ANDWF	f, d	AND W with f	1	00	0101	dfff	ffff	Z	**2**
ASRF	f, d	Arithmetic Right Shift	1	11	0111	dfff	ffff	C, Z	**2**
LSLF	f, d	Logical Left Shift	1	11	0101	dfff	ffff	C, Z	**2**
LSRF	f, d	Logical Right Shift	1	11	0110	dfff	ffff	C, Z	**2**
CLRF	f	Clear f	1	00	0001	lfff	ffff	Z	**2**
CLRW	–	Clear W	1	00	0001	0000	00xx	Z	
COMF	f, d	Complement f	1	00	1001	dfff	ffff	Z	**2**
DECF	f, d	Decrement f	1	00	0011	dfff	ffff	Z	**2**
INCF	f, d	Increment f	1	00	1010	dfff	ffff	Z	**2**
IORWF	f, d	Inclusive OR W with f	1	00	0100	dfff	ffff	Z	**2**
MOVF	f, d	Move f	1	00	1000	dfff	ffff	Z	**2**
MOVWF	f	Move W to f	1	00	0000	1fff	ffff		**2**
RLF	f, d	Rotate Left f through Carry	1	00	1101	dfff	ffff	C	**2**
RRF	f, d	Rotate Right f through Carry	1	00	1100	dfff	ffff	C	**2**
SUBWF	f, d	Subtract W from f	1	00	0010	dfff	ffff	C, DC, Z	**2**
SUBWFB	f, d	Subtract with Borrow W from f	1	11	1011	dfff	ffff	C, DC, Z	**2**
SWAPF	f, d	Swap nibbles in f	1	00	1110	dfff	ffff		**2**
XORWF	f, d	Exclusive OR W with f	1	00	0110	dfff	ffff	Z	**2**
BYTE ORIENTED SKIP OPERATIONS									
DECFSZ	f, d	Decrement f, Skip if 0	1(2)	00	1011	dfff	ffff		**1, 2**
INCFSZ	f, d	Increment f, Skip if 0	1(2)	00	1111	dfff	ffff		**1, 2**
BIT-ORIENTED FILE REGISTER OPERATIONS									
BCF	f, b	Bit Clear f	1	01	00bb	bfff	ffff		**2**
BSF	f, b	Bit Set f	1	01	01bb	bfff	ffff		**2**
BIT-ORIENTED SKIP OPERATIONS									
BTFSC	f, b	Bit Test f, Skip if Clear	1 (2)	01	10bb	bfff	ffff		**1, 2**
BTFSS	f, b	Bit Test f, Skip if Set	1 (2)	01	11bb	bfff	ffff		**1, 2**
LITERAL OPERATIONS									
ADDLW	k	Add literal and W	1	11	1110	kkkk	kkkk	C, DC, Z	
ANDLW	k	AND literal with W	1	11	1001	kkkk	kkkk	Z	
IORLW	k	Inclusive OR literal with W	1	11	1000	kkkk	kkkk	Z	
MOVLB	k	Move literal to BSR	1	00	0000	001k	kkkk		
MOVLP	k	Move literal to PCLATH	1	11	0001	1kkk	kkkk		
MOVLW	k	Move literal to W	1	11	0000	kkkk	kkkk		
SUBLW	k	Subtract W from literal	1	11	1100	kkkk	kkkk	C, DC, Z	
XORLW	k	Exclusive OR literal with W	1	11	1010	kkkk	kkkk	Z	

Note 1: If the Program Counter (PC) is modified, or a conditional test is true, the instruction requires two cycles. The second cycle is executed as a NOP.

2: If this instruction addresses an INDF register and the MSb of the corresponding FSR is set, this instruction will require one additional instruction cycle.

© 2010-2015 Microchip Technology Inc.

TABLE 29-3: PIC16F/LF1824/1828 ENHANCED INSTRUCTION SET (CONTINUED)

Mnemonic, Operands		Description	Cycles	14-Bit Opcode MSb LSb	Status Affected	Notes
CONTROL OPERATIONS						
BRA	k	Relative Branch	2	11 001k kkkk kkkk		
BRW	–	Relative Branch with W	2	00 0000 0000 1011		
CALL	k	Call Subroutine	2	10 0kkk kkkk kkkk		
CALLW	–	Call Subroutine with W	2	00 0000 0000 1010		
GOTO	k	Go to address	2	10 1kkk kkkk kkkk		
RETFIE	k	Return from interrupt	2	00 0000 0000 1001		
RETLW	k	Return with literal in W	2	11 0100 kkkk kkkk		
RETURN	–	Return from Subroutine	2	00 0000 0000 1000		
INHERENT OPERATIONS						
CLRWDT	–	Clear Watchdog Timer	1	00 0000 0110 0100	$\overline{TO}$, $\overline{PD}$	
NOP	–	No Operation	1	00 0000 0000 0000		
OPTION	–	Load OPTION_REG register with W	1	00 0000 0110 0010		
RESET	–	Software device Reset	1	00 0000 0000 0001		
SLEEP	–	Go into Standby mode	1	00 0000 0110 0011	$\overline{TO}$, $\overline{PD}$	
TRIS	f	Load TRIS register with W	1	00 0000 0110 0fff		
C-COMPILER OPTIMIZED						
ADDFSR	n, k	Add Literal k to FSRn	1	11 0001 0nkk kkkk		
MOVIW	n mm	Move Indirect FSRn to W with pre/post inc/dec modifier, mm	1	00 0000 0001 0nmm kkkk	Z	**2, 3**
	k[n]	Move INDFn to W, Indexed Indirect.	1	11 1111 0nkk 1nmm	Z	**2**
MOVWI	n mm	Move W to Indirect FSRn with pre/post inc/dec modifier, mm	1	00 0000 0001 kkkk		**2, 3**
	k[n]	Move W to INDFn, Indexed Indirect.	1	11 1111 1nkk		**2**

Note 1: If the Program Counter (PC) is modified, or a conditional test is true, the instruction requires two cycles. The second cycle is executed as a NOP.

2: If this instruction addresses an INDF register and the MSb of the corresponding FSR is set, this instruction will require one additional instruction cycle.

3: See Table in the MOVIW and MOVWI instruction descriptions.

29.2 Instruction Descriptions

ADDFSR — Add Literal to FSRn

Syntax:	[*label*] ADDFSR FSRn, k
Operands:	-32 ≤ k ≤ 31 n ∈ [0, 1]
Operation:	FSR(n) + k → FSR(n)
Status Affected:	None
Description:	The signed 6-bit literal ‘k’ is added to the contents of the FSRnH:FSRnL register pair. FSRn is limited to the range 0000h - FFFFh. Moving beyond these bounds will cause the FSR to wrap-around.

ADDLW — Add literal and W

Syntax:	[*label*] ADDLW k
Operands:	0 ≤ k ≤ 255
Operation:	(W) + k → (W)
Status Affected:	C, DC, Z
Description:	The contents of the W register are added to the 8-bit literal ‘k’ and the result is placed in the W register.

ADDWF — Add W and f

Syntax:	[*label*] ADDWF f,d
Operands:	0 ≤ f ≤ 127 d ∈ [0,1]
Operation:	(W) + (f) → (destination)
Status Affected:	C, DC, Z
Description:	Add the contents of the W register with register ‘f’. If ‘d’ is ‘0’, the result is stored in the W register. If ‘d’ is ‘1’, the result is stored back in register ‘f’.

ADDWFC — ADD W and CARRY bit to f

Syntax:	[*label*] ADDWFC f {,d}
Operands:	0 ≤ f ≤ 127 d ∈ [0,1]
Operation:	(W) + (f) + (C) → dest
Status Affected:	C, DC, Z
Description:	Add W, the Carry flag and data memory location ‘f’. If ‘d’ is ‘0’, the result is placed in W. If ‘d’ is ‘1’, the result is placed in data memory location ‘f’.

ANDLW — AND literal with W

Syntax:	[*label*] ANDLW k
Operands:	0 ≤ k ≤ 255
Operation:	(W) .AND. (k) → (W)
Status Affected:	Z
Description:	The contents of W register are AND’ed with the 8-bit literal ‘k’. The result is placed in the W register.

ANDWF — AND W with f

Syntax:	[*label*] ANDWF f,d
Operands:	0 ≤ f ≤ 127 d ∈ [0,1]
Operation:	(W) .AND. (f) → (destination)
Status Affected:	Z
Description:	AND the W register with register ‘f’. If ‘d’ is ‘0’, the result is stored in the W register. If ‘d’ is ‘1’, the result is stored back in register ‘f’.

ASRF — Arithmetic Right Shift

Syntax:	[*label*] ASRF f {,d}
Operands:	0 ≤ f ≤ 127 d ∈ [0,1]
Operation:	(f<7>)→ dest<7> (f<7:1>) → dest<6:0>, (f<0>) → C,
Status Affected:	C, Z
Description:	The contents of register ‘f’ are shifted one bit to the right through the Carry flag. The MSb remains unchanged. If ‘d’ is ‘0’, the result is placed in W. If ‘d’ is ‘1’, the result is stored back in register ‘f’.

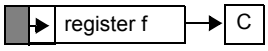

© 2010-2015 Microchip Technology Inc.

BCF **Bit Clear f**

Syntax:	[*label*] BCF f,b
Operands:	0 ≤ f ≤ 127 0 ≤ b ≤ 7
Operation:	0 → (f<b>)
Status Affected:	None
Description:	Bit 'b' in register 'f' is cleared.

BRA **Relative Branch**

Syntax:	[*label*] BRA label [*label*] BRA $+k
Operands:	-256 ≤ label - PC + 1 ≤ 255 -256 ≤ k ≤ 255
Operation:	(PC) + 1 + k → PC
Status Affected:	None
Description:	Add the signed 9-bit literal 'k' to the PC. Since the PC will have incremented to fetch the next instruction, the new address will be PC + 1 + k. This instruction is a 2-cycle instruction. This branch has a limited range.

BRW **Relative Branch with W**

Syntax:	[*label*] BRW
Operands:	None
Operation:	(PC) + (W) → PC
Status Affected:	None
Description:	Add the contents of W (unsigned) to the PC. Since the PC will have incremented to fetch the next instruction, the new address will be PC + 1 + (W). This instruction is a 2-cycle instruction.

BSF **Bit Set f**

Syntax:	[*label*] BSF f,b
Operands:	0 ≤ f ≤ 127 0 ≤ b ≤ 7
Operation:	1 → (f<b>)
Status Affected:	None
Description:	Bit 'b' in register 'f' is set.

BTFSC **Bit Test f, Skip if Clear**

Syntax:	[*label*] BTFSC f,b
Operands:	0 ≤ f ≤ 127 0 ≤ b ≤ 7
Operation:	skip if (f<b>) = 0
Status Affected:	None
Description:	If bit 'b' in register 'f' is '1', the next instruction is executed. If bit 'b', in register 'f', is '0', the next instruction is discarded, and a NOP is executed instead, making this a 2-cycle instruction.

BTFSS **Bit Test f, Skip if Set**

Syntax:	[*label*] BTFSS f,b
Operands:	0 ≤ f ≤ 127 0 ≤ b < 7
Operation:	skip if (f<b>) = 1
Status Affected:	None
Description:	If bit 'b' in register 'f' is '0', the next instruction is executed. If bit 'b' is '1', then the next instruction is discarded and a NOP is executed instead, making this a 2-cycle instruction.

CALL **Call Subroutine**

Syntax:	[*label*] CALL k
Operands:	0 ≤ k ≤ 2047
Operation:	(PC)+ 1→ TOS, k → PC<10:0>, (PCLATH<4:3>) → PC<12:11>
Status Affected:	None
Description:	Call Subroutine. First, return address (PC + 1) is pushed onto the stack. The 11-bit immediate address is loaded into PC bits <10:0>. The upper bits of the PC are loaded from PCLATH. CALL is a 2-cycle instruction.

CALLW **Subroutine Call With W**

Syntax:	[*label*] CALLW
Operands:	None
Operation:	(PC) +1 → TOS, (W) → PC<7:0>, (PCLATH<6:0>) → PC<14:8>
Status Affected:	None
Description:	Subroutine call with W. First, the return address (PC + 1) is pushed onto the return stack. Then, the contents of W is loaded into PC<7:0>, and the contents of PCLATH into PC<14:8>. CALLW is a 2-cycle instruction.

CLRF **Clear f**

Syntax:	[*label*] CLRF f
Operands:	0 ≤ f ≤ 127
Operation:	00h → (f) 1 → Z
Status Affected:	Z
Description:	The contents of register ‘f’ are cleared and the Z bit is set.

CLRW **Clear W**

Syntax:	[*label*] CLRW
Operands:	None
Operation:	00h → (W) 1 → Z
Status Affected:	Z
Description:	W register is cleared. Zero bit (Z) is set.

CLRWDT **Clear Watchdog Timer**

Syntax:	[*label*] CLRWDT
Operands:	None
Operation:	00h → WDT 0 → WDT prescaler, 1 → $\overline{TO}$ 1 → $\overline{PD}$
Status Affected:	$\overline{TO}$, $\overline{PD}$
Description:	CLRWDT instruction resets the Watchdog Timer. It also resets the prescaler of the WDT. Status bits $\overline{TO}$ and $\overline{PD}$ are set.

COMF **Complement f**

Syntax:	[*label*] COMF f,d
Operands:	0 ≤ f ≤ 127 d ∈ [0,1]
Operation:	($\bar{f}$) → (destination)
Status Affected:	Z
Description:	The contents of register ‘f’ are complemented. If ‘d’ is ‘0’, the result is stored in W. If ‘d’ is ‘1’, the result is stored back in register ‘f’.

DECF **Decrement f**

Syntax:	[*label*] DECF f,d
Operands:	0 ≤ f ≤ 127 d ∈ [0,1]
Operation:	(f) - 1 → (destination)
Status Affected:	Z
Description:	Decrement register ‘f’. If ‘d’ is ‘0’, the result is stored in the W register. If ‘d’ is ‘1’, the result is stored back in register ‘f’.

© 2010-2015 Microchip Technology Inc.

DECFSZ **Decrement f, Skip if 0**

Syntax:	[*label*] DECFSZ f,d
Operands:	$0 \le f \le 127$ $d \in [0,1]$
Operation:	(f) - 1 → (destination); skip if result = 0
Status Affected:	None
Description:	The contents of register 'f' are decremented. If 'd' is '0', the result is placed in the W register. If 'd' is '1', the result is placed back in register 'f'. If the result is '1', the next instruction is executed. If the result is '0', then a NOP is executed instead, making it a 2-cycle instruction.

GOTO **Unconditional Branch**

Syntax:	[*label*] GOTO k
Operands:	$0 \le k \le 2047$
Operation:	k → PC<10:0> PCLATH<4:3> → PC<12:11>
Status Affected:	None
Description:	GOTO is an unconditional branch. The 11-bit immediate value is loaded into PC bits <10:0>. The upper bits of PC are loaded from PCLATH<4:3>. GOTO is a 2-cycle instruction.

INCF **Increment f**

Syntax:	[*label*] INCF f,d
Operands:	$0 \le f \le 127$ $d \in [0,1]$
Operation:	(f) + 1 → (destination)
Status Affected:	Z
Description:	The contents of register 'f' are incremented. If 'd' is '0', the result is placed in the W register. If 'd' is '1', the result is placed back in register 'f'.

INCFSZ **Increment f, Skip if 0**

Syntax:	[*label*] INCFSZ f,d
Operands:	$0 \le f \le 127$ $d \in [0,1]$
Operation:	(f) + 1 → (destination), skip if result = 0
Status Affected:	None
Description:	The contents of register 'f' are incremented. If 'd' is '0', the result is placed in the W register. If 'd' is '1', the result is placed back in register 'f'. If the result is '1', the next instruction is executed. If the result is '0', a NOP is executed instead, making it a 2-cycle instruction.

IORLW **Inclusive OR literal with W**

Syntax:	[*label*] IORLW k
Operands:	$0 \le k \le 255$
Operation:	(W) .OR. k → (W)
Status Affected:	Z
Description:	The contents of the W register are OR'ed with the 8-bit literal 'k'. The result is placed in the W register.

IORWF **Inclusive OR W with f**

Syntax:	[*label*] IORWF f,d
Operands:	$0 \le f \le 127$ $d \in [0,1]$
Operation:	(W) .OR. (f) → (destination)
Status Affected:	Z
Description:	Inclusive OR the W register with register 'f'. If 'd' is '0', the result is placed in the W register. If 'd' is '1', the result is placed back in register 'f'.

LSLF **Logical Left Shift**

Syntax: [*label*] LSLF f {,d}

Operands: $0 \le f \le 127$
$d \in [0,1]$

Operation: (f<7>) → C
(f<6:0>) → dest<7:1>
0 → dest<0>

Status Affected: C, Z

Description: The contents of register 'f' are shifted one bit to the left through the Carry flag. A '0' is shifted into the LSb. If 'd' is '0', the result is placed in W. If 'd' is '1', the result is stored back in register 'f'.



LSRF **Logical Right Shift**

Syntax: [*label*] LSRF f {,d}

Operands: $0 \le f \le 127$
$d \in [0,1]$

Operation: 0 → dest<7>
(f<7:1>) → dest<6:0>,
(f<0>) → C,

Status Affected: C, Z

Description: The contents of register 'f' are shifted one bit to the right through the Carry flag. A '0' is shifted into the MSb. If 'd' is '0', the result is placed in W. If 'd' is '1', the result is stored back in register 'f'.

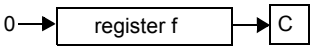

MOVF **Move f**

Syntax: [*label*] MOVF f,d

Operands: $0 \le f \le 127$
$d \in [0,1]$

Operation: (f) → (dest)

Status Affected: Z

Description: The contents of register f is moved to a destination dependent upon the status of d. If d = 0, destination is W register. If d = 1, the destination is file register f itself. d = 1 is useful to test a file register since status flag Z is affected.

Words: 1

Cycles: 1

Example:

```
MOVF    FSR, 0
```

After Instruction
W = value in FSR register
Z = 1

© 2010-2015 Microchip Technology Inc.

MOVIW **Move INDFn to W**

Syntax: [*label*] MOVIW ++FSRn
[*label*] MOVIW --FSRn
[*label*] MOVIW FSRn++
[*label*] MOVIW FSRn--
[*label*] MOVIW k[FSRn]

Operands: $n \in [0,1]$
$-32 \le k \le 31$

Operation: INDFn → W
Effective address is determined by
- FSR + 1 (preincrement)
- FSR - 1 (predecrement)
- FSR + k (relative offset)

After the Move, the FSR value will be either:
- FSR + 1 (all increments)
- FSR - 1 (all decrements)
- Unchanged

Status Affected: Z

Mode	Syntax	mm
Preincrement	++FSRn	00
Predecrement	--FSRn	01
Postincrement	FSRn++	10
Postdecrement	FSRn--	11

Description: This instruction is used to move data between W and one of the indirect registers (INDFn). Before/after this move, the pointer (FSRn) is updated by pre/post incrementing/decrementing it.

Note: The INDFn registers are not physical registers. Any instruction that accesses an INDFn register actually accesses the register at the address specified by the FSRn.

FSRn is limited to the range 0000h - FFFFh. Incrementing/decrementing it beyond these bounds will cause it to wrap-around.

MOVLB **Move literal to BSR**

Syntax: [*label*] MOVLB k

Operands: $0 \le k \le 15$

Operation: k → BSR

Status Affected: None

Description: The 5-bit literal 'k' is loaded into the Bank Select Register (BSR).

MOVLP **Move literal to PCLATH**

Syntax: [*label*] MOVLP k

Operands: $0 \le k \le 127$

Operation: k → PCLATH

Status Affected: None

Description: The 7-bit literal 'k' is loaded into the PCLATH register.

MOVLW **Move literal to W**

Syntax: [*label*] MOVLW k

Operands: $0 \le k \le 255$

Operation: k → (W)

Status Affected: None

Description: The 8-bit literal 'k' is loaded into W register. The "don't cares" will assemble as '0's.

Words: 1

Cycles: 1

Example:
```
MOVLW   0x5A
```
After Instruction
W = 0x5A

MOVWF **Move W to f**

Syntax: [*label*] MOVWF f

Operands: $0 \le f \le 127$

Operation: (W) → (f)

Status Affected: None

Description: Move data from W register to register 'f'.

Words: 1

Cycles: 1

Example:
```
MOVWF   OPTION
```
Before Instruction
OPTION = 0xFF
W = 0x4F
After Instruction
OPTION = 0x4F
W = 0x4F

MOVWI **Move W to INDFn**

Syntax: [*label*] MOVWI ++INDFn
[*label*] MOVWI --INDFn
[*label*] MOVWI INDFn++
[*label*] MOVWI INDFn--
[*label*] MOVWI k[FSRn]

Operands: $n \in [0,1]$
$-32 \leq k \leq 31$

Operation: $W \rightarrow INDFn$
Effective address is determined by
- FSR + 1 (preincrement)
- FSR - 1 (predecrement)
- FSR + k (relative offset)

After the Move, the FSR value will be either:
- FSR + 1 (all increments)
- FSR - 1 (all decrements)

Unchanged

Status Affected: None

Mode	Syntax	mm
Preincrement	++FSRn	00
Predecrement	--FSRn	01
Postincrement	FSRn++	10
Postdecrement	FSRn--	11

Description: This instruction is used to move data between W and one of the indirect registers (INDFn). Before/after this move, the pointer (FSRn) is updated by pre/post incrementing/decrementing it.

Note: The INDFn registers are not physical registers. Any instruction that accesses an INDFn register actually accesses the register at the address specified by the FSRn.

FSRn is limited to the range 0000h - FFFFh. Incrementing/decrementing it beyond these bounds will cause it to wrap-around.

The increment/decrement operation on FSRn WILL NOT affect any Status bits.

NOP **No Operation**

Syntax: [*label*] NOP

Operands: None

Operation: No operation

Status Affected: None

Description: No operation.

Words: 1

Cycles: 1

Example:
```
NOP
```

OPTION **Load OPTION_REG Register with W**

Syntax: [*label*] OPTION

Operands: None

Operation: $(W) \rightarrow OPTION_REG$

Status Affected: None

Description: Move data from W register to OPTION_REG register.

RESET **Software Reset**

Syntax: [*label*] RESET

Operands: None

Operation: Execute a device Reset. Resets the nRI flag of the PCON register.

Status Affected: None

Description: This instruction provides a way to execute a hardware Reset by software.

© 2010-2015 Microchip Technology Inc.

RETFIE **Return from Interrupt**

Syntax:	[*label*] RETFIE
Operands:	None
Operation:	TOS → PC, 1 → GIE
Status Affected:	None
Description:	Return from Interrupt. Stack is POPed and Top-of-Stack (TOS) is loaded in the PC. Interrupts are enabled by setting Global Interrupt Enable bit, GIE (INTCON<7>). This is a 2-cycle instruction.
Words:	1
Cycles:	2
Example:	`RETFIE` After Interrupt PC = TOS GIE = 1

RETLW **Return with literal in W**

Syntax:	[*label*] RETLW k
Operands:	0 ≤ k ≤ 255
Operation:	k → (W); TOS → PC
Status Affected:	None
Description:	The W register is loaded with the 8-bit literal 'k'. The program counter is loaded from the top of the stack (the return address). This is a 2-cycle instruction.
Words:	1
Cycles:	2

Example:	`CALL TABLE;W contains table`
	`;offset value`
	`;W now has table value`
	`TABLE`
	`ADDWF PC ;W = offset`
	`RETLW k1 ;Begin table`
	`RETLW k2 ;`
	`RETLW kn ; End of table`
	Before Instruction
	W = 0x07
	After Instruction
	W = value of k8

RETURN **Return from Subroutine**

Syntax:	[*label*] RETURN
Operands:	None
Operation:	TOS → PC
Status Affected:	None
Description:	Return from subroutine. The stack is POPed and the top of the stack (TOS) is loaded into the program counter. This is a 2-cycle instruction.

RLF **Rotate Left f through Carry**

Syntax:	[*label*] RLF f,d
Operands:	0 ≤ f ≤ 127 d ∈ [0,1]
Operation:	See description below
Status Affected:	C
Description:	The contents of register 'f' are rotated one bit to the left through the Carry flag. If 'd' is '0', the result is placed in the W register. If 'd' is '1', the result is stored back in register 'f'.
Words:	1
Cycles:	1
Example:	`RLF REG1,0` Before Instruction REG1 = 1110 0110 C = 0 After Instruction REG1 = 1110 0110 W = 1100 1100 C = 1

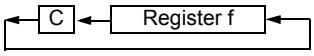

RRF **Rotate Right f through Carry**

Syntax: [*label*] RRF f,d

Operands: $0 \le f \le 127$
$d \in [0,1]$

Operation: See description below

Status Affected: C

Description: The contents of register 'f' are rotated one bit to the right through the Carry flag. If 'd' is '0', the result is placed in the W register. If 'd' is '1', the result is placed back in register 'f'.

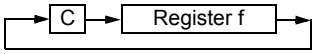

SLEEP **Enter Sleep mode**

Syntax: [*label*] SLEEP

Operands: None

Operation: 00h → WDT,
0 → WDT prescaler,
1 → $\overline{TO}$,
0 → $\overline{PD}$

Status Affected: $\overline{TO}$, $\overline{PD}$

Description: The power-down Status bit, $\overline{PD}$ is cleared. Time-out Status bit, $\overline{TO}$ is set. Watchdog Timer and its prescaler are cleared.
The processor is put into Sleep mode with the oscillator stopped.

SUBLW **Subtract W from literal**

Syntax: [*label*] SUBLW k

Operands: $0 \le k \le 255$

Operation: k - (W) → (W)

Status Affected: C, DC, Z

Description: The W register is subtracted (2's complement method) from the 8-bit literal 'k'. The result is placed in the W register.

C = 0	W > k
C = 1	W ≤ k
DC = 0	W<3:0> > k<3:0>
DC = 1	W<3:0> ≤ k<3:0>

SUBWF **Subtract W from f**

Syntax: [*label*] SUBWF f,d

Operands: $0 \le f \le 127$
$d \in [0,1]$

Operation: (f) - (W) → (destination)

Status Affected: C, DC, Z

Description: Subtract (2's complement method) W register from register 'f'. If 'd' is '0', the result is stored in the W register. If 'd' is '1', the result is stored back in register 'f.

C = 0	W > f
C = 1	W ≤ f
DC = 0	W<3:0> > f<3:0>
DC = 1	W<3:0> ≤ f<3:0>

SUBWFB **Subtract W from f with Borrow**

Syntax: SUBWFB f {,d}

Operands: $0 \le f \le 127$
$d \in [0,1]$

Operation: (f) – (W) – ($\overline{B}$) → dest

Status Affected: C, DC, Z

Description: Subtract W and the BORROW flag (CARRY) from register 'f' (2's complement method). If 'd' is '0', the result is stored in W. If 'd' is '1', the result is stored back in register 'f'.

© 2010-2015 Microchip Technology Inc.

SWAPF **Swap Nibbles in f**

Syntax:	[*label*] SWAPF f,d
Operands:	$0 \le f \le 127$ $d \in [0,1]$
Operation:	(f<3:0>) → (destination<7:4>), (f<7:4>) → (destination<3:0>)
Status Affected:	None
Description:	The upper and lower nibbles of register ‘f’ are exchanged. If ‘d’ is ‘0’, the result is placed in the W register. If ‘d’ is ‘1’, the result is placed in register ‘f’.

TRIS **Load TRIS Register with W**

Syntax:	[*label*] TRIS f
Operands:	$5 \le f \le 7$
Operation:	(W) → TRIS register ‘f’
Status Affected:	None
Description:	Move data from W register to TRIS register. When ‘f’ = 5, TRISA is loaded. When ‘f’ = 6, TRISB is loaded. When ‘f’ = 7, TRISC is loaded.

XORLW **Exclusive OR literal with W**

Syntax:	[*label*] XORLW k
Operands:	$0 \le k \le 255$
Operation:	(W) .XOR. k → (W)
Status Affected:	Z
Description:	The contents of the W register are XOR’ed with the 8-bit literal ‘k’. The result is placed in the W register.

XORWF **Exclusive OR W with f**

Syntax:	[*label*] XORWF f,d
Operands:	$0 \le f \le 127$ $d \in [0,1]$
Operation:	(W) .XOR. (f) → (destination)
Status Affected:	Z
Description:	Exclusive OR the contents of the W register with register ‘f’. If ‘d’ is ‘0’, the result is stored in the W register. If ‘d’ is ‘1’, the result is stored back in register ‘f’.

30.0 ELECTRICAL SPECIFICATIONS

Absolute Maximum Ratings(†)

Ambient temperature under bias ..... -40°C to +125°C
Storage temperature ..... -65°C to +150°C
Voltage on V_{DD} with respect to V_{SS}, PIC16F1824/8 ..... -0.3V to +6.5V
Voltage on V_{DD} with respect to V_{SS}, PIC16LF1824/8 ..... -0.3V to +4.0V
Voltage on $\overline{MCLR}$ with respect to Vss ..... -0.3V to +9.0V
Voltage on all other pins with respect to V_{SS} ..... -0.3V to (V_{DD} + 0.3V)
Total power dissipation(1) ..... 800 mW
Maximum current out of V_{SS} pin, -40°C ≤ T_A ≤ +85°C for industrial ..... 210 mA
Maximum current out of V_{SS} pin, -40°C ≤ T_A ≤ +125°C for extended ..... 95 mA
Maximum current into V_{DD} pin, -40°C ≤ T_A ≤ +85°C for industrial ..... 170 mA
Maximum current into V_{DD} pin, -40°C ≤ T_A ≤ +125°C for extended ..... 70 mA
Clamp current, I_K (V_{PIN} < 0 or V_{PIN} > V_{DD}) ..... ± 20 mA
Maximum output current sunk by any I/O pin ..... 25 mA
Maximum output current sourced by any I/O pin ..... 25 mA

Note 1: Power dissipation is calculated as follows: $P_{DIS} = V_{DD} \times \{I_{DD} - \sum I_{OH}\} + \sum \{(V_{DD} - V_{OH}) \times I_{OH}\} + \sum (V_{OI} \times I_{OL})$.

† **NOTICE:** Stresses above those listed under “Absolute Maximum Ratings” may cause permanent damage to the device. This is a stress rating only and functional operation of the device at those or any other conditions above those indicated in the operation listings of this specification is not implied. Exposure to maximum rating conditions for extended periods may affect device reliability.

© 2010-2015 Microchip Technology Inc.

FIGURE 30-1: PIC16F1824/8 VOLTAGE FREQUENCY GRAPH, -40°C ≤ TA ≤ +125°C

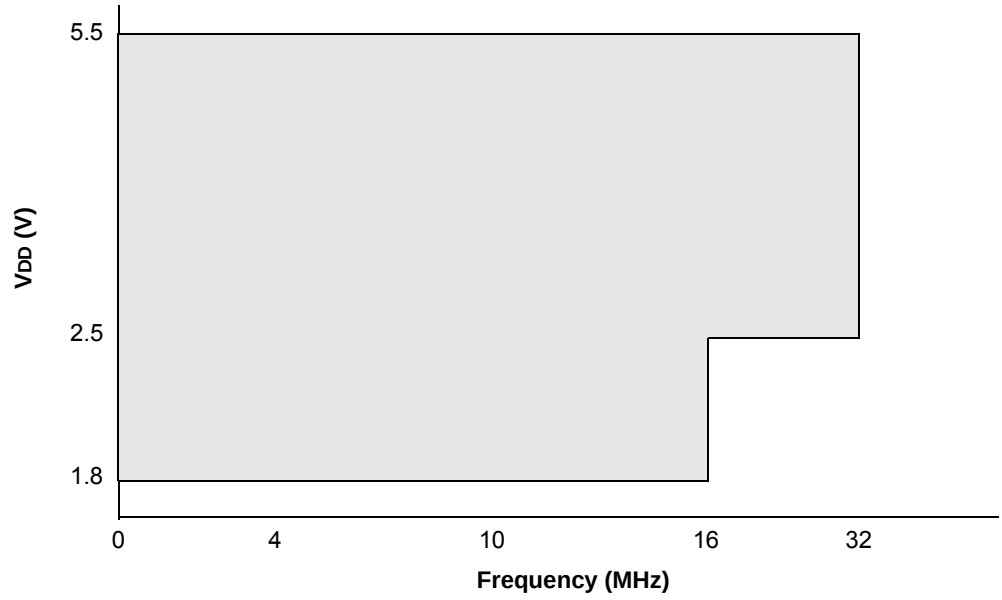

Note 1: The shaded region indicates the permissible combinations of voltage and frequency.
2: Refer to Table 30-1 for each Oscillator mode's supported frequencies.

FIGURE 30-2: PIC16LF1824/8 VOLTAGE FREQUENCY GRAPH, -40°C ≤ TA ≤ +125°C

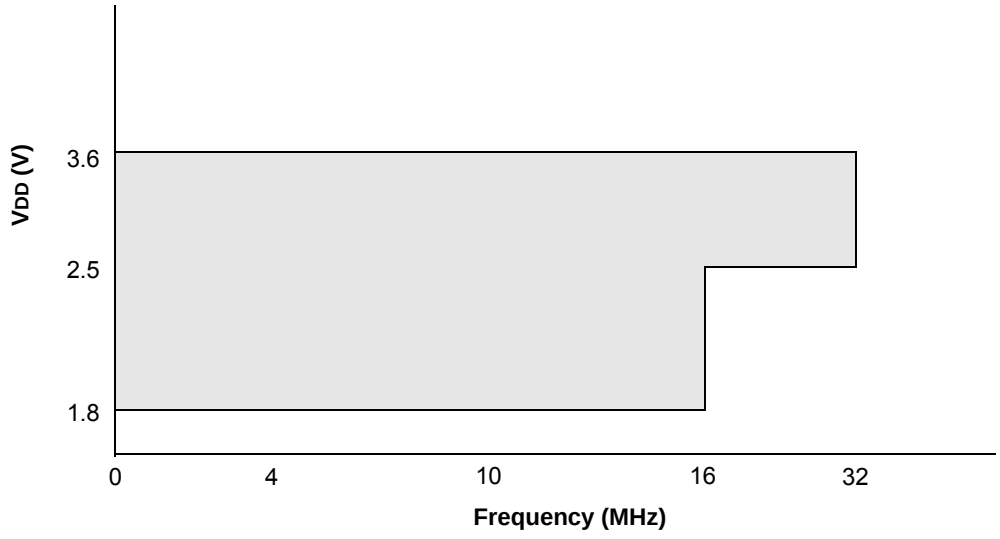

Note 1: The shaded region indicates the permissible combinations of voltage and frequency.
2: Refer to Table 30-1 for each Oscillator mode's supported frequencies.

FIGURE 30-3: HFINTOSC FREQUENCY ACCURACY OVER DEVICE V_{DD} AND TEMPERATURE

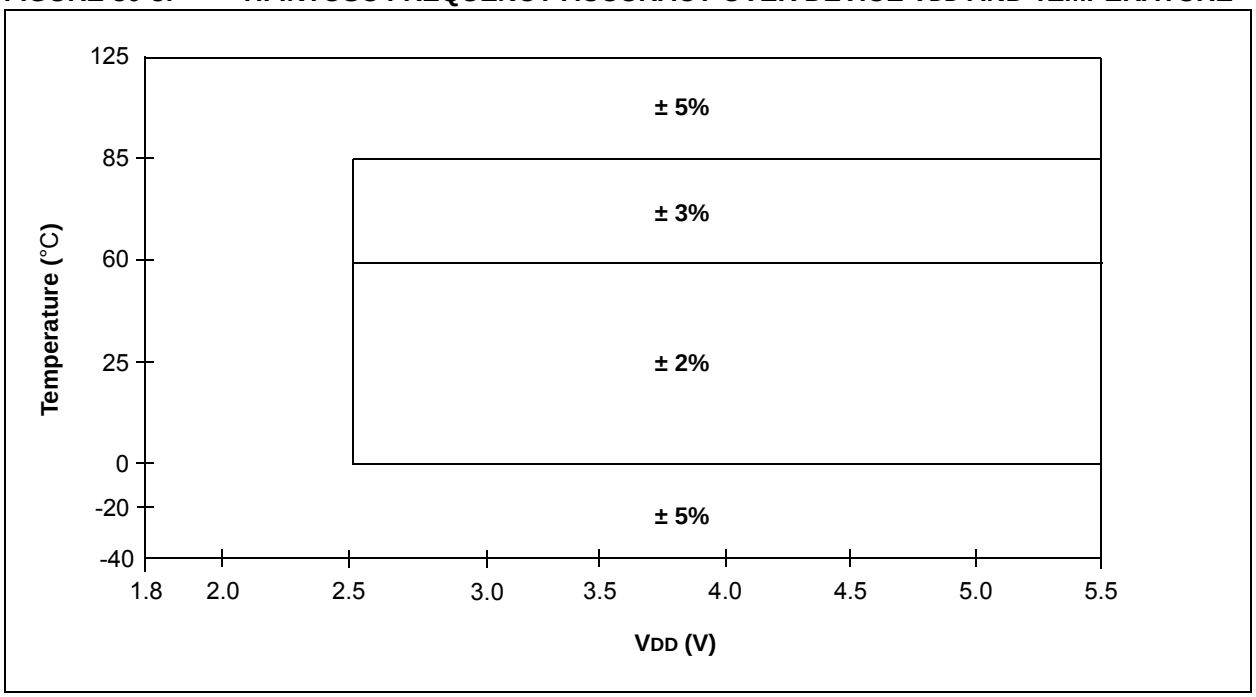

© 2010-2015 Microchip Technology Inc.

30.1 DC Characteristics: PIC16(L)F1824/8-I/E (Industrial, Extended)

PIC16LF1824/8			Standard Operating Conditions (unless otherwise stated) Operating temperature -40°C ≤ TA ≤ +85°C for industrial -40°C ≤ TA ≤ +125°C for extended				
PIC16F1824/8			**Standard Operating Conditions (unless otherwise stated)** Operating temperature -40°C ≤ TA ≤ +85°C for industrial -40°C ≤ TA ≤ +125°C for extended				
Param. No.	**Sym.**	**Characteristic**	**Min.**	**Typ†**	**Max.**	**Units**	**Conditions**
D001	VDD	**Supply Voltage (VDDMIN, VDDMAX)**					
		PIC16LF1824/8	1.8 2.5	— —	3.6 3.6	V V	FOSC ≤ 16 MHz: FOSC ≤ 32 MHz **(Note 2)**
D001		PIC16F1824/8	1.8 2.5	— —	5.5 5.5	V V	FOSC ≤ 16 MHz: FOSC ≤ 32 MHz **(Note 2)**
D002*	VDR	**RAM Data Retention Voltage(1)**					
		PIC16LF1824/8	1.5	—	—	V	Device in Sleep mode
D002*		PIC16F1824/8	1.7	—	—	V	Device in Sleep mode
D002A*	VPOR	**Power-on Reset Release Voltage**	—	1.6	—	V	
D002B*	VPORR	**Power-on Reset Rearm Voltage**					
		PIC16LF1824/8	—	0.8	—	V	Device in Sleep mode
D002B*		PIC16F1824/8	—	1.4	—	V	Device in Sleep mode
D003	VADFVR	**Fixed Voltage Reference Voltage for ADC**	-8	—	6	%	1.024V, VDD ≥ 2.5V 2.048V, VDD ≥ 2.5V 4.096V, VDD ≥ 4.75V
D003A	VCDAFVR	**Fixed Voltage Reference Voltage for Comparator and DAC**	-11	—	7	%	1.024V, VDD ≥ 2.5V 2.048V, VDD ≥ 2.5V 4.096V, VDD ≥ 4.75V
D004*	SVDD	**VDD Rise Rate** to ensure internal Power-on Reset signal	0.05	—	—	V/ms	See **Section 7.1 "Power-on Reset (POR)"** for details.

* These parameters are characterized but not tested.

† Data in "Typ" column is at 3.0V, 25°C unless otherwise stated. These parameters are for design guidance only and are not tested.

Note 1: This is the limit to which VDD can be lowered in Sleep mode without losing RAM data.

2: PLL required for 32 MHz operation.

FIGURE 30-4: POR AND POR REARM WITH SLOW RISING VDD

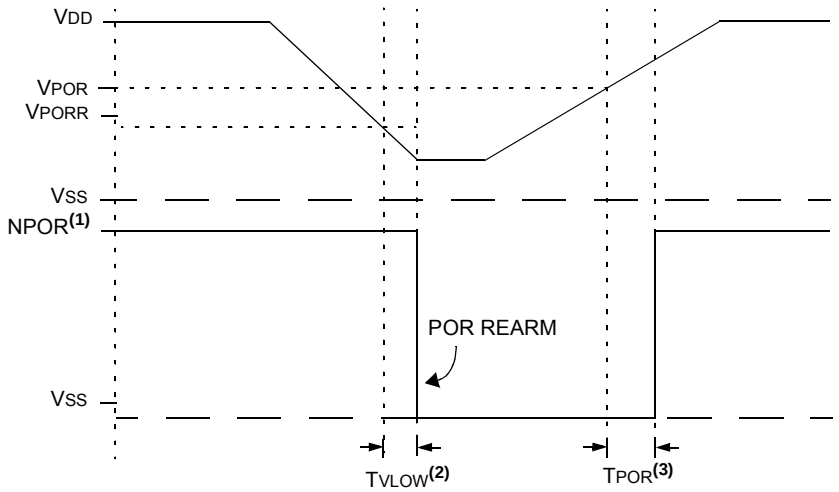

Note 1: When NPOR is low, the device is held in Reset.
2: TPOR 1 μs typical.
3: TVLOW 2.7 μs typical.

© 2010-2015 Microchip Technology Inc.

30.2 DC Characteristics: PIC16(L)F1824/8-I/E (Industrial, Extended)

PIC16LF1824/8			Standard Operating Conditions (unless otherwise stated) Operating temperature -40°C ≤ TA ≤ +85°C for industrial -40°C ≤ TA ≤ +125°C for extended				
PIC16F1824/8			**Standard Operating Conditions (unless otherwise stated)** Operating temperature -40°C ≤ TA ≤ +85°C for industrial -40°C ≤ TA ≤ +125°C for extended				
Param No.	**Device Characteristics**	**Min.**	**Typ†**	**Max.**	**Units**	**Conditions**	
						VDD	**Note**
	Supply Current (IDD)(1, 2)						
D010		—	5.0	10	µA	1.8	FOSC = 32 kHz LP Oscillator mode, -40°C ≤ TA ≤ +85°C
		—	7.5	12	µA	3.0	
D010		—	24	50	µA	1.8	FOSC = 32 kHz LP Oscillator mode, -40°C ≤ TA ≤ +85°C
		—	30	55	µA	3.0	
		—	32	60	µA	5.0	
D010A		—	5.0	13	µA	1.8	FOSC = 32 kHz LP Oscillator mode, -40°C ≤ TA ≤ +125°C
		—	7.5	15	µA	3.0	
D010A		—	24	55	µA	1.8	FOSC = 32 kHz LP Oscillator mode, -40°C ≤ TA ≤ +125°C
		—	30	60	µA	3.0	
		—	32	65	µA	5.0	
D011		—	88	110	µA	1.8	FOSC = 1 MHz XT Oscillator mode
		—	133	190	µA	3.0	
D011		—	110	130	µA	1.8	FOSC = 1 MHz XT Oscillator mode
		—	155	220	µA	3.0	
		—	180	290	µA	5.0	
D012		—	220	290	µA	1.8	FOSC = 4 MHz XT Oscillator mode
		—	370	480	µA	3.0	
D012		—	238	300	µA	1.8	FOSC = 4 MHz XT Oscillator mode
		—	390	500	µA	3.0	
		—	447	700	µA	5.0	
D013		—	55	160	µA	1.8	FOSC = 1 MHz EC Oscillator mode, Medium-Power mode
		—	90	230	µA	3.0	
D013		—	75	180	µA	1.8	FOSC = 1 MHz EC Oscillator mode Medium-Power mode
		—	116	240	µA	3.0	
		—	145	320	µA	5.0	

* These parameters are characterized but not tested.

† Data in "Typ" column is at 3.0V, 25°C unless otherwise stated. These parameters are for design guidance only and are not tested.

Note 1: The test conditions for all IDD measurements in active operation mode are: OSC1 = external square wave, from rail-to-rail; all I/O pins tri-stated, pulled to VDD; MCLR = VDD; WDT disabled.

2: The supply current is mainly a function of the operating voltage and frequency. Other factors, such as I/O pin loading and switching rate, oscillator type, internal code execution pattern and temperature, also have an impact on the current consumption.

3: 8 MHz internal oscillator with 4xPLL enabled.

4: 8 MHz crystal oscillator with 4xPLL enabled.

5: For RC oscillator configurations, current through REXT is not included. The current through the resistor can be extended by the formula IR = VDD/2REXT (mA) with REXT in kΩ..

30.2 DC Characteristics: PIC16(L)F1824/8-I/E (Industrial, Extended) (Continued)

PIC16LF1824/8			Standard Operating Conditions (unless otherwise stated) Operating temperature -40°C ≤ TA ≤ +85°C for industrial -40°C ≤ TA ≤ +125°C for extended				
PIC16F1824/8			**Standard Operating Conditions (unless otherwise stated)** Operating temperature -40°C ≤ TA ≤ +85°C for industrial -40°C ≤ TA ≤ +125°C for extended				
Param No.	**Device Characteristics**	**Min.**	**Typ†**	**Max.**	**Units**	**Conditions**	
						VDD	**Note**
	Supply Current (IDD)(1, 2)						
D014		—	187	250	µA	1.8	FOSC = 4 MHz EC Oscillator mode, Medium-Power mode
		—	324	430	µA	3.0	
D014		—	206	275	µA	1.8	FOSC = 4 MHz EC Oscillator mode Medium-Power mode
		—	350	450	µA	3.0	
		—	410	650	µA	5.0	
D015		—	6	18	µA	1.8	FOSC = 31 kHz LFINTOSC mode, -40°C ≤ TA ≤ +85°C
		—	8	20	µA	3.0	
D015		—	21	58	µA	1.8	FOSC = 31 kHz LFINTOSC mode, -40°C ≤ TA ≤ +85°C
		—	27	65	µA	3.0	
		—	28	70	µA	5.0	
D016		—	113	165	µA	1.8	FOSC = 500 kHz MFINTOSC mode
		—	140	190	µA	3.0	
D016		—	124	180	µA	1.8	FOSC = 500 kHz MFINTOSC mode
		—	150	210	µA	3.0	
		—	190	270	µA	5.0	
D017*		—	0.44	0.70	mA	1.8	FOSC = 8 MHz HFINTOSC mode
		—	0.70	1.10	mA	3.0	
D017*		—	0.48	0.75	mA	1.8	FOSC = 8 MHz HFINTOSC mode
		—	0.74	1.15	mA	3.0	
		—	0.82	1.35	mA	5.0	
D018		—	0.70	1.20	mA	1.8	FOSC = 16 MHz HFINTOSC mode
		—	1.10	1.80	mA	3.0	
D018		—	0.70	1.20	mA	1.8	FOSC = 16 MHz HFINTOSC mode
		—	1.10	1.80	mA	3.0	
		—	1.40	2.00	mA	5.0	
D019		—	2.10	3.30	mA	3.0	FOSC = 32 MHz HFINTOSC mode **(NOTE 3)**
		—	3.20	3.60	mA	3.6	

* These parameters are characterized but not tested.

† Data in "Typ" column is at 3.0V, 25°C unless otherwise stated. These parameters are for design guidance only and are not tested.

Note 1: The test conditions for all IDD measurements in active operation mode are: OSC1 = external square wave, from rail-to-rail; all I/O pins tri-stated, pulled to VDD; $\overline{MCLR}$ = VDD; WDT disabled.

2: The supply current is mainly a function of the operating voltage and frequency. Other factors, such as I/O pin loading and switching rate, oscillator type, internal code execution pattern and temperature, also have an impact on the current consumption.

3: 8 MHz internal oscillator with 4xPLL enabled.

4: 8 MHz crystal oscillator with 4xPLL enabled.

5: For RC oscillator configurations, current through REXT is not included. The current through the resistor can be extended by the formula IR = VDD/2REXT (mA) with REXT in kΩ..

© 2010-2015 Microchip Technology Inc.

30.2 DC Characteristics: PIC16(L)F1824/8-I/E (Industrial, Extended) (Continued)

PIC16LF1824/8			Standard Operating Conditions (unless otherwise stated) Operating temperature -40°C ≤ TA ≤ +85°C for industrial -40°C ≤ TA ≤ +125°C for extended				
PIC16F1824/8			**Standard Operating Conditions (unless otherwise stated)** Operating temperature -40°C ≤ TA ≤ +85°C for industrial -40°C ≤ TA ≤ +125°C for extended				
Param No.	**Device Characteristics**	**Min.**	**Typ†**	**Max.**	**Units**	**Conditions**	
						VDD	**Note**
	Supply Current (IDD)(1, 2)						
D019		—	2.20	3.40	mA	3.0	FOSC = 32 MHz HFINTOSC mode **(Note 3)**
		—	3.20	3.60	mA	5.0	
D020		—	2.50	3.30	mA	3.0	FOSC = 32 MHz HS Oscillator mode **(Note 4)**
		—	3.00	3.60	mA	3.6	
D020		—	2.50	3.30	mA	3.0	FOSC = 32 MHz HS Oscillator mode **(Note 4)**
		—	3.00	3.60	mA	5.0	
D021		—	210	350	μA	1.8	FOSC = 4 MHz EXTRC mode **(Note 5)**
		—	362	680	μA	3.0	
D021		—	252	350	μA	1.8	FOSC = 4 MHz EXTRC mode **(Note 5)**
		—	406	680	μA	3.0	
		—	462	830	μA	5.0	

* These parameters are characterized but not tested.

† Data in "Typ" column is at 3.0V, 25°C unless otherwise stated. These parameters are for design guidance only and are not tested.

Note 1: The test conditions for all IDD measurements in active operation mode are: OSC1 = external square wave, from rail-to-rail; all I/O pins tri-stated, pulled to VDD; $\overline{MCLR}$ = VDD; WDT disabled.

2: The supply current is mainly a function of the operating voltage and frequency. Other factors, such as I/O pin loading and switching rate, oscillator type, internal code execution pattern and temperature, also have an impact on the current consumption.

3: 8 MHz internal oscillator with 4xPLL enabled.

4: 8 MHz crystal oscillator with 4xPLL enabled.

5: For RC oscillator configurations, current through REXT is not included. The current through the resistor can be extended by the formula IR = VDD/2REXT (mA) with REXT in kΩ..

30.3 DC Characteristics: PIC16(L)F1824/8-I/E (Power-Down)

PIC16LF1824/8			**Standard Operating Conditions (unless otherwise stated)** Operating temperature -40°C ≤ TA ≤ +85°C for industrial -40°C ≤ TA ≤ +125°C for extended					
PIC16F1824/8			**Standard Operating Conditions (unless otherwise stated)** Operating temperature -40°C ≤ TA ≤ +85°C for industrial -40°C ≤ TA ≤ +125°C for extended					
Param No.	**Device Characteristics**	**Min.**	**Typ†**	**Max. +85°C**	**Max. +125°C**	**Units**	**Conditions**	
							VDD	**Note**
	Power-down Base Current (IPD)(2)							
D022		—	0.02	1.0	2.4	µA	1.8	WDT, BOR, FVR, and T1OSC disabled, all Peripherals Inactive
		—	0.03	1.5	3.0	µA	3.0	
D022		—	18	37	44	µA	1.8	WDT, BOR, FVR, and T1OSC disabled, all Peripherals Inactive
		—	20	42	48	µA	3.0	
		—	22	45	65	µA	5.0	
D023		—	0.2	2.0	3.0	µA	1.8	LPWDT Current **(Note 1)**
		—	0.5	2.0	4.0	µA	3.0	
D023		—	18	38	44	µA	1.8	LPWDT Current **(Note 1)**
		—	21	43	48	µA	3.0	
		—	22	46	65	µA	5.0	
D023A		—	12	22	25	µA	1.8	FVR current
		—	13	24	27	µA	3.0	
D023A		—	33	62	65	µA	1.8	FVR current
		—	40	72	75	µA	3.0	
		—	68	115	120	µA	5.0	
D024		—	7.0	14	16	µA	3.0	BOR Current **(Note 1)**
D024		—	24	47	50	µA	3.0	BOR Current **(Note 1)**
		—	29	55	70	µA	5.0	
D025		—	0.65	3.5	4.0	µA	1.8	T1OSC Current **(Note 1)**
		—	2.3	4.0	4.5	µA	3.0	
D025		—	19	39	45	µA	1.8	T1OSC Current **(Note 1)**
		—	21	43	59	µA	3.0	
		—	23	55	75	µA	5.0	
D026		—	0.03	1.5	3.0	µA	1.8	A/D Current **(Note 1, 3)**, no conversion in progress
		—	0.04	2.0	3.5	µA	3.0	
D026		—	18	38	45	µA	1.8	A/D Current **(Note 1, 3)**, no conversion in progress
		—	20	43	49	µA	3.0	
		—	22	46	65	µA	5.0	

* These parameters are characterized but not tested.

† Data in "Typ" column is at 3.0V, 25°C unless otherwise stated. These parameters are for design guidance only and are not tested.

Note 1: The peripheral current is the sum of the base IDD or IPD and the additional current consumed when this peripheral is enabled. The peripheral Δ current can be determined by subtracting the base IDD or IPD current from this limit. Max values should be used when calculating total current consumption.

2: The power-down current in Sleep mode does not depend on the oscillator type. Power-down current is measured with the part in Sleep mode, with all I/O pins in high-impedance state and tied to VDD.

3: A/D oscillator source is FRC.

© 2010-2015 Microchip Technology Inc.

30.3 DC Characteristics: PIC16(L)F1824/8-I/E (Power-Down) (Continued)

PIC16LF1824/8			Standard Operating Conditions (unless otherwise stated) Operating temperature -40°C ≤ TA ≤ +85°C for industrial -40°C ≤ TA ≤ +125°C for extended					
PIC16F1824/8			Standard Operating Conditions (unless otherwise stated) Operating temperature -40°C ≤ TA ≤ +85°C for industrial -40°C ≤ TA ≤ +125°C for extended					
Param No.	Device Characteristics	Min.	Typ†	Max. +85°C	Max. +125°C	Units	Conditions	
							VDD	Note
	Power-down Base Current (IPD)(2)							
D026A*		—	250	—	—	µA	1.8	A/D Current **(Note 1, 3)**, conversion in progress
		—	250	—	—	µA	3.0	
D026A*		—	280	—	—	µA	1.8	A/D Current **(Note 1, 3)**, conversion in progress
		—	280	—	—	µA	3.0	
		—	280	—	—	µA	5.0	
D027		—	2.0	5.0	6.0	µA	1.8	Cap Sense, Low Power, CPSRM = 0, CPSRNG = 01 **(Note 1)**
		—	4.0	7.0	9.0	µA	3.0	
D027		—	21	41	45	µA	1.8	Cap Sense, Low Power, CPSRM = 0, CPSRNG = 01 **(Note 1)**
		—	23	47	55	µA	3.0	
		—	24	55	68	µA	5.0	
D027A		—	5.0	8.0	10	µA	1.8	Cap Sense, Medium Power, CPSRM = 0, CPSRNG = 10 **(Note 1)**
		—	8.0	13	14	µA	3.0	
D027A		—	21	44	47	µA	1.8	Cap Sense, Medium Power, CPSRM = 0, CPSRNG = 10 **(Note 1)**
		—	23	53	60	µA	3.0	
		—	24	57	71	µA	5.0	
D027B		—	13	22	24	µA	1.8	Cap Sense, High Power, CPSRM = 0, CPSRNG = 11 **(Note 1)**
		—	35	45	47	µA	3.0	
D027B		—	21	58	65	µA	1.8	Cap Sense, High Power, CPSRM = 0, CPSRNG = 11 **(Note 1)**
		—	23	84	90	µA	3.0	
		—	25	95	110	µA	5.0	
D028		—	7.3	16	17	µA	1.8	Comparator Current, Low-Power mode **(Note 1)**
		—	7.4	18	19	µA	3.0	
D028		—	28	45	50	µA	1.8	Comparator Current, Low-Power mode **(Note 1)**
		—	30	56	61	µA	3.0	
		—	32	60	80	µA	5.0	
D028B		—	28	46	48	µA	1.8	Comparator Current, High-Power mode, **(Note 1)**
		—	29	48	49	µA	3.0	
D028B		—	60	80	85	µA	1.8	Comparator Current, High-Power mode, **(Note 1)**
		—	62	85	90	µA	3.0	
		—	64	90	105	µA	5.0	

* These parameters are characterized but not tested.

† Data in "Typ" column is at 3.0V, 25°C unless otherwise stated. These parameters are for design guidance only and are not tested.

Note 1: The peripheral current is the sum of the base IDD or IPD and the additional current consumed when this peripheral is enabled. The peripheral ∆ current can be determined by subtracting the base IDD or IPD current from this limit. Max values should be used when calculating total current consumption.

2: The power-down current in Sleep mode does not depend on the oscillator type. Power-down current is measured with the part in Sleep mode, with all I/O pins in high-impedance state and tied to VDD.

3: A/D oscillator source is FRC.

30.4 DC Characteristics: PIC16(L)F1824/8-I/E

DC CHARACTERISTICS			Standard Operating Conditions (unless otherwise stated) Operating temperature -40°C ≤ TA ≤ +85°C for industrial -40°C ≤ TA ≤ +125°C for extended				
Param No.	**Sym.**	**Characteristic**	**Min.**	**Typ†**	**Max.**	**Units**	**Conditions**
	VIL	**Input Low Voltage**					
		I/O PORT:					
D030		with TTL buffer	—	—	0.8	V	4.5V ≤ VDD ≤ 5.5V
D030A			—	—	0.15 VDD	V	1.8V ≤ VDD ≤ 4.5V
D031		with Schmitt Trigger buffer	—	—	0.2 VDD	V	2.0V ≤ VDD ≤ 5.5V
		with I²C™ levels	—	—	0.3 VDD	V	
		with SMBus levels	—	—	0.8	V	2.7V ≤ VDD ≤ 5.5V
D032		$\overline{MCLR}$, OSC1 (RC mode)	—	—	0.2 VDD	V	**(Note 1)**
D033		OSC1 (HS mode)	—	—	0.3 VDD	V	
	VIH	**Input High Voltage**					
		I/O PORT:					
D040		with TTL buffer	2.0	—	—	V	4.5V ≤ VDD ≤ 5.5V
D040A			0.25 VDD + 0.8	—	—	V	1.8V ≤ VDD ≤ 4.5V
D041		with Schmitt Trigger buffer	0.8 VDD	—	—	V	2.0V ≤ VDD ≤ 5.5V
		with I²C™ levels	0.7 VDD	—	—	V	
		with SMBus levels	2.1	—	—	V	2.7V ≤ VDD ≤ 5.5V
D042		$\overline{MCLR}$	0.8 VDD	—	—	V	
D043A		OSC1 (HS mode)	0.7 VDD	—	—	V	
D043B		OSC1 (RC mode)	0.9 VDD	—	—	V	VDD > 2.0V **(Note 1)**
	IIL	**Input Leakage Current (2)**					
D060		I/O ports	—	± 5	± 125	nA	VSS ≤ VPIN ≤ VDD, Pin at high-impedance at 85°C
				± 5	± 1000	nA	125°C
D061		$\overline{MCLR}$(3)	—	± 50	± 200	nA	VSS ≤ VPIN ≤ VDD at 85°C
	IPUR	**Weak Pull-up Current**					
D070*			25 25	100 140	200 300	μA	VDD = 3.3V, VPIN = VSS VDD = 5.0V, VPIN = VSS
	VOL	**Output Low Voltage(4)**					
D080		I/O ports	—	—	0.6	V	IOL = 8 mA, VDD = 5V IOL = 6 mA, VDD = 3.3V IOL = 1.8 mA, VDD = 1.8V
	VOH	**Output High Voltage(4)**					
D090		I/O ports	VDD - 0.7	—	—	V	IOH = 3.5 mA, VDD = 5V IOH = 3 mA, VDD = 3.3V IOH = 1 mA, VDD = 1.8V
		Capacitive Loading Specs on Output Pins					
D101*	COSC2	OSC2 pin	—	—	15	pF	In XT, HS and LP modes when external clock is used to drive OSC1
D101A*	CIO	All I/O pins	—	—	50	pF	

* These parameters are characterized but not tested.

† Data in "Typ" column is at 3.0V, 25°C unless otherwise stated. These parameters are for design guidance only and are not tested.

Note 1: In RC oscillator configuration, the OSC1/CLKIN pin is a Schmitt Trigger input. It is not recommended to use an external clock in RC mode.

2: Negative current is defined as current sourced by the pin.

3: The leakage current on the $\overline{MCLR}$ pin is strongly dependent on the applied voltage level. The specified levels represent normal operating conditions. Higher leakage current may be measured at different input voltages.

4: Including OSC2 in CLKOUT mode.

© 2010-2015 Microchip Technology Inc.

30.5 Memory Programming Requirements

DC CHARACTERISTICS			Standard Operating Conditions (unless otherwise stated) Operating temperature -40°C ≤ TA ≤ +125°C				
Param No.	**Sym.**	**Characteristic**	**Min.**	**Typ†**	**Max.**	**Units**	**Conditions**
		Program Memory High Voltage Programming Specifications					
D110	VIHH	Voltage on $\overline{\text{MCLR}}$/VPP/RA5 pin	8.0	—	9.0	V	**(Note 3, 4)**
D111	IDDVPP	Programming/Erase Current on VPP, High Voltage Programming	—	—	10	mA	
D112	VBE	VDD for Bulk Erase	2.7	—	VDDMAX	V	
D113	VPEW	VDD for Write or Row Erase	VDDMIN	—	VDDMAX	V	
D114	IPPPGM	Programming/Erase Current on VPP, Low Voltage Programming	—	1.0	—	mA	
D115	IDDPGM	Programming/Erase Current on VDD, High or Low Voltage Programming	—	5.0	—	mA	
		Data EEPROM Memory					
D116	ED	Byte Endurance	100K	—	—	E/W	-40°C to +85°C
D117	VDRW	VDD for Read/Write	VDDMIN	—	VDDMAX	V	
D118	TDEW	Erase/Write Cycle Time	—	4.0	5.0	ms	
D119	TRETD	Characteristic Retention	—	40	—	Year	Provided no other specifications are violated
D120	TREF	Number of Total Erase/Write Cycles before Refresh(2)	1M	10M	—	E/W	-40°C to +85°C
		Program Flash Memory					
D121	EP	Cell Endurance	10K	—	—	E/W	-40°C to +85°C **(Note 1)**
D122	VPRW	VDD for Read/Write	VDDMIN	—	VDDMAX	V	
D123	TIW	Self-timed Write Cycle Time	—	2	2.5	ms	
D124	TRETD	Characteristic Retention	—	40	—	Year	Provided no other specifications are violated

† Data in "Typ" column is at 3.0V, 25°C unless otherwise stated. These parameters are for design guidance only and are not tested.

Note 1: Self-write and Block Erase.

2: Refer to **Section 11.2 "Using the Data EEPROM"** for a more detailed discussion on data EEPROM endurance.

3: Required only if single-supply programming is disabled.

4: The MPLAB® ICD 2 does not support variable VPP output. Circuitry to limit the ICD 2 VPP voltage must be placed between the ICD 2 and target system when programming or debugging with the ICD 2.

30.6 Thermal Considerations

Standard Operating Conditions (unless otherwise stated) Operating temperature -40°C ≤ TA ≤ +125°C					
Param No.	**Sym.**	**Characteristic**	**Typ.**	**Units**	**Conditions**
TH01	θJA	Thermal Resistance Junction to Ambient	70.0	°C/W	14-pin PDIP package
			95.3	°C/W	14-pin SOIC package
			100.0	°C/W	14-pin TSSOP package
			45.7	°C/W	16-pin QFN (4x4mm) package
			31.8	°C/W	16-pin UQFN (4x4mm) package
			62.2	°C/W	20-pin PDIP package
			77.7	°C/W	20-pin SOIC package
			87.3	°C/W	20-pin SSOP package
			43.0	°C/W	20-pin QFN (4x4mm) package
			32.8	°C/W	20-pin UQFN (4x4mm) package
TH02	θJC	Thermal Resistance Junction to Case	32.8	°C/W	14-pin PDIP package
			31.0	°C/W	14-pin SOIC package
			24.4	°C/W	14-pin TSSOP package
			6.3	°C/W	16-pin QFN (4x4mm) package
			24.4	°C/W	16-pin UQFN (4x4mm) package
			27.5	°C/W	20-pin PDIP package
			23.1	°C/W	20-pin SOIC package
			31.1	°C/W	20-pin SSOP package
			5.3	°C/W	20-pin QFN (4x4mm) package
			27.4	°C/W	20-pin UQFN (4x4mm) package
TH03	TJMAX	Maximum Junction Temperature	150	°C	
TH04	PD	Power Dissipation	—	W	PD = PINTERNAL + PI/O
TH05	PINTERNAL	Internal Power Dissipation	—	W	PINTERNAL = IDD x VDD **(Note 1)**
TH06	PI/O	I/O Power Dissipation	—	W	PI/O = Σ (IOL * VOL) + Σ (IOH * (VDD - VOH))
TH07	PDER	Derated Power	—	W	PDER = PDMAX (TJ - TA)/θJA **(Note 2)**

Note 1: IDD is current to run the chip alone without driving any load on the output pins.
2: TA = Ambient Temperature, TJ = Junction Temperature

© 2010-2015 Microchip Technology Inc.

30.7 Timing Parameter Symbology

The timing parameter symbols have been created with one of the following formats:

1. TppS2ppS
2. TppS

T			
F	Frequency	T	Time

Lowercase letters (pp) and their meanings:

pp			
cc	CCP1	osc	OSC1
ck	CLKOUT	rd	$\overline{RD}$
cs	$\overline{CS}$	rw	$\overline{RD}$ or $\overline{WR}$
di	SDIx	sc	SCKx
do	SDO	ss	$\overline{SS}$
dt	Data in	t0	T0CKI
io	I/O PORT	t1	T1CKI
mc	$\overline{MCLR}$	wr	$\overline{WR}$

Uppercase letters and their meanings:

S			
F	Fall	P	Period
H	High	R	Rise
I	Invalid (High-impedance)	V	Valid
L	Low	Z	High-impedance

FIGURE 30-5: LOAD CONDITIONS

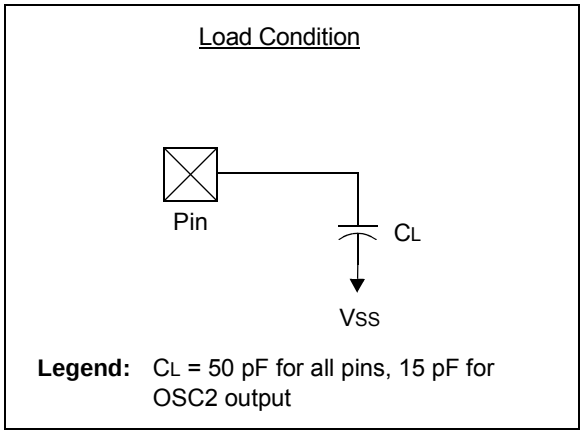

Legend: CL = 50 pF for all pins, 15 pF for OSC2 output

30.8 AC Characteristics: PIC16(L)F1824/8-I/E

FIGURE 30-6: CLOCK TIMING

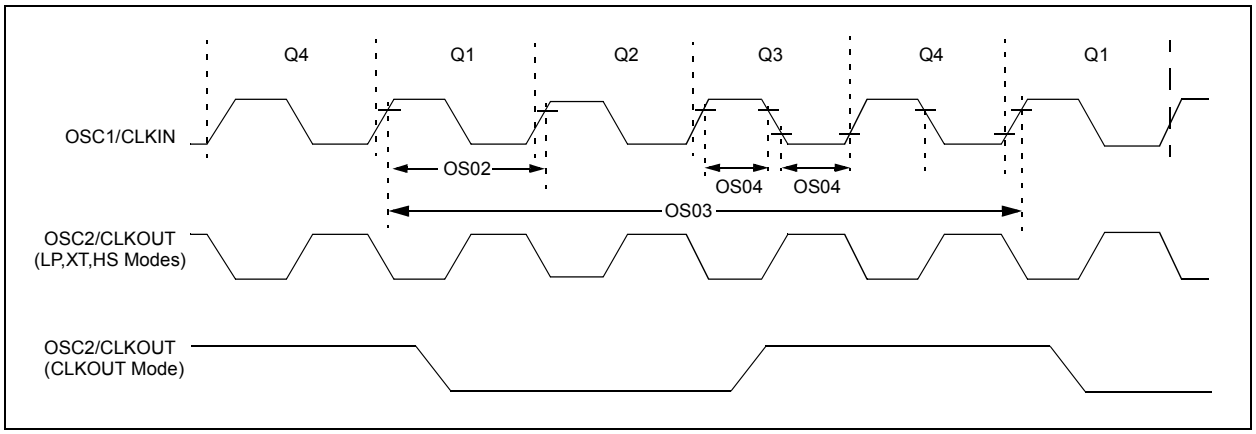

TABLE 30-1: CLOCK OSCILLATOR TIMING REQUIREMENTS

Standard Operating Conditions (unless otherwise stated) Operating temperature -40°C ≤ TA ≤ +125°C							
Param No.	**Sym.**	**Characteristic**	**Min.**	**Typ†**	**Max.**	**Units**	**Conditions**
OS01	FOSC	External CLKIN Frequency(1)	DC	—	0.5	MHz	EC Oscillator mode (low)
			DC	—	4	MHz	EC Oscillator mode (medium)
			DC	—	32	MHz	EC Oscillator mode (high)
		Oscillator Frequency(1)	—	32.768	—	kHz	LP Oscillator mode
			0.1	—	4	MHz	XT Oscillator mode
			1	—	4	MHz	HS Oscillator mode, VDD ≤ 2.7V
			1	—	20	MHz	HS Oscillator mode, VDD > 2.7V
			DC	—	4	MHz	RC Oscillator mode
OS02	TOSC	External CLKIN Period(1)	27	—	∞	μs	LP Oscillator mode
			250	—	∞	ns	XT Oscillator mode
			50	—	∞	ns	HS Oscillator mode
			50	—	∞	ns	EC Oscillator mode
		Oscillator Period(1)	—	30.5	—	μs	LP Oscillator mode
			250	—	10,000	ns	XT Oscillator mode
			50	—	1,000	ns	HS Oscillator mode
			250	—	—	ns	RC Oscillator mode
OS03	TCY	Instruction Cycle Time(1)	200	—	DC	ns	TCY = FOSC/4
OS04*	TosH, TosL	External CLKIN High, External CLKIN Low	2	—	—	μs	LP oscillator
			100	—	—	ns	XT oscillator
			20	—	—	ns	HS oscillator
OS05*	TosR, TosF	External CLKIN Rise, External CLKIN Fall	0	—	∞	ns	LP oscillator
			0	—	∞	ns	XT oscillator
			0	—	∞	ns	HS oscillator

* These parameters are characterized but not tested.

† Data in "Typ" column is at 3.0V, 25°C unless otherwise stated. These parameters are for design guidance only and are not tested.

Note 1: Instruction cycle period (TCY) equals four times the input oscillator time base period. All specified values are based on characterization data for that particular oscillator type under standard operating conditions with the device executing code. Exceeding these specified limits may result in an unstable oscillator operation and/or higher than expected current consumption. All devices are tested to operate at "min" values with an external clock applied to OSC1 pin. When an external clock input is used, the "max" cycle time limit is "DC" (no clock) for all devices.

© 2010-2015 Microchip Technology Inc.

TABLE 30-2: OSCILLATOR PARAMETERS

Standard Operating Conditions (unless otherwise stated) Operating Temperature -40°C ≤ TA ≤ +125°C								
Param No.	**Sym.**	**Characteristic**	**Freq. Tolerance**	**Min.**	**Typ†**	**Max.**	**Units**	**Conditions**
OS08	HFOSC	Internal Calibrated HFINTOSC Frequency(1)	±2%	—	16.0	—	MHz	0°C ≤ TA ≤ +60°C, VDD ≥ 2.5V
			±3%	—	16.0	—	MHz	60°C ≤ TA ≤ +85°C, VDD ≥ 2.5V
			±5%	—	16.0	—	MHz	-40°C ≤ TA ≤ +125°C
OS08A	MFOSC	Internal Calibrated MFINTOSC Frequency(1)	±2%	—	500	—	kHz	0°C ≤ TA ≤ +60°C, VDD ≥ 2.5V
			±3%	—	500	—	kHz	60°C ≤ TA ≤ +85°C, VDD ≥ 2.5V
			±5%	—	500	—	kHz	-40°C ≤ TA ≤ +125°C
OS09	LFOSC	Internal LFINTOSC Frequency	±25%	—	31	—	kHz	-40°C ≤ TA ≤ +125°C
OS10*	TIOSC ST	HFINTOSC Wake-up from Sleep Start-up Time	—	—	5	8	µs	
		MFINTOSC Wake-up from Sleep Start-up Time	—	—	20	30	µs	

* These parameters are characterized but not tested.

† Data in "Typ" column is at 3.0V, 25°C unless otherwise stated. These parameters are for design guidance only and are not tested.

Note 1: To ensure these oscillator frequency tolerances, VDD and VSS must be capacitively decoupled as close to the device as possible. 0.1 µF and 0.01 µF values in parallel are recommended.

TABLE 30-3: PLL CLOCK TIMING SPECIFICATIONS (VDD = 2.7V to 5.5V)

Param No.	**Sym.**	**Characteristic**	**Min.**	**Typ†**	**Max.**	**Units**	**Conditions**
F10	FOSC	Oscillator Frequency Range	4	—	8	MHz	
F11	FSYS	On-Chip VCO System Frequency	16	—	32	MHz	
F12	TRC	PLL Start-up Time (Lock Time)	—	—	2	ms	
F13*	ΔCLK	CLKOUT Stability (Jitter)	-0.25%	—	+0.25%	%	

* These parameters are characterized but not tested.

† Data in "Typ" column is at 3V, 25°C unless otherwise stated. These parameters are for design guidance only and are not tested.

FIGURE 30-7: CLKOUT AND I/O TIMING

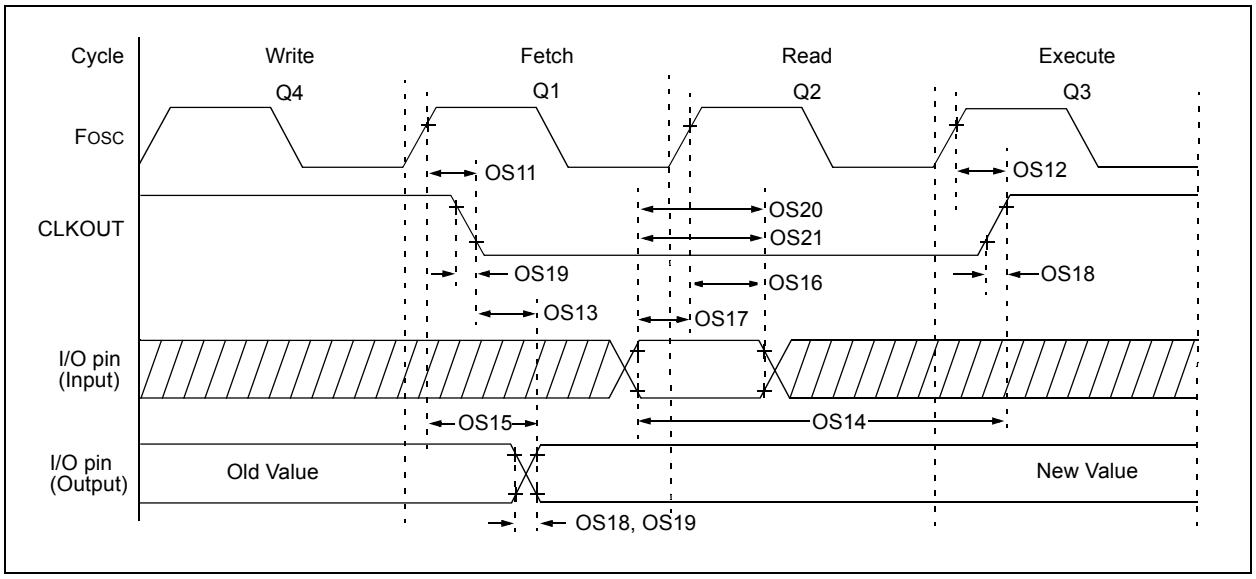

© 2010-2015 Microchip Technology Inc.

TABLE 30-4: CLKOUT AND I/O TIMING PARAMETERS

Standard Operating Conditions (unless otherwise stated) Operating Temperature -40°C ≤ TA ≤ +125°C							
Param No.	**Sym.**	**Characteristic**	**Min.**	**Typ†**	**Max.**	**Units**	**Conditions**
OS11	TosH2ckL	FOSC↑ to CLKOUT↓(1)	—	—	70	ns	VDD = 3.0-5.0V
OS12	TosH2ckH	FOSC↑ to CLKOUT↑(1)	—	—	72	ns	VDD = 3.0-5.0V
OS13	TckL2ioV	CLKOUT↓ to Port out valid(1)	—	—	20	ns	
OS14	TioV2ckH	Port input valid before CLKOUT↑(1)	TOSC + 200 ns	—	—	ns	
OS15	TosH2ioV	Fosc↑ (Q1 cycle) to Port out valid	—	50	70*	ns	VDD = 3.0-5.0V
OS16	TosH2ioI	Fosc↑ (Q2 cycle) to Port input invalid (I/O in hold time)	50	—	—	ns	VDD = 3.0-5.0V
OS17	TioV2osH	Port input valid to Fosc↑ (Q2 cycle) (I/O in setup time)	20	—	—	ns	
OS18*	TioR	Port output rise time	— —	40 15	72 32	ns	VDD = 1.8V VDD = 3.0-5.0V
OS19*	TioF	Port output fall time	— —	28 15	55 30	ns	VDD = 1.8V VDD = 3.0-5.0V
OS20*	Tinp	INT pin input high or low time	25	—	—	ns	
OS21*	Tioc	Interrupt-on-change new input level time	25	—	—	ns	

* These parameters are characterized but not tested.

† Data in "Typ" column is at 3.0V, 25°C unless otherwise stated.

Note 1: Measurements are taken in RC mode where CLKOUT output is 4 x TOSC.

FIGURE 30-8: RESET, WATCHDOG TIMER, OSCILLATOR START-UP TIMER AND POWER-UP TIMER TIMING

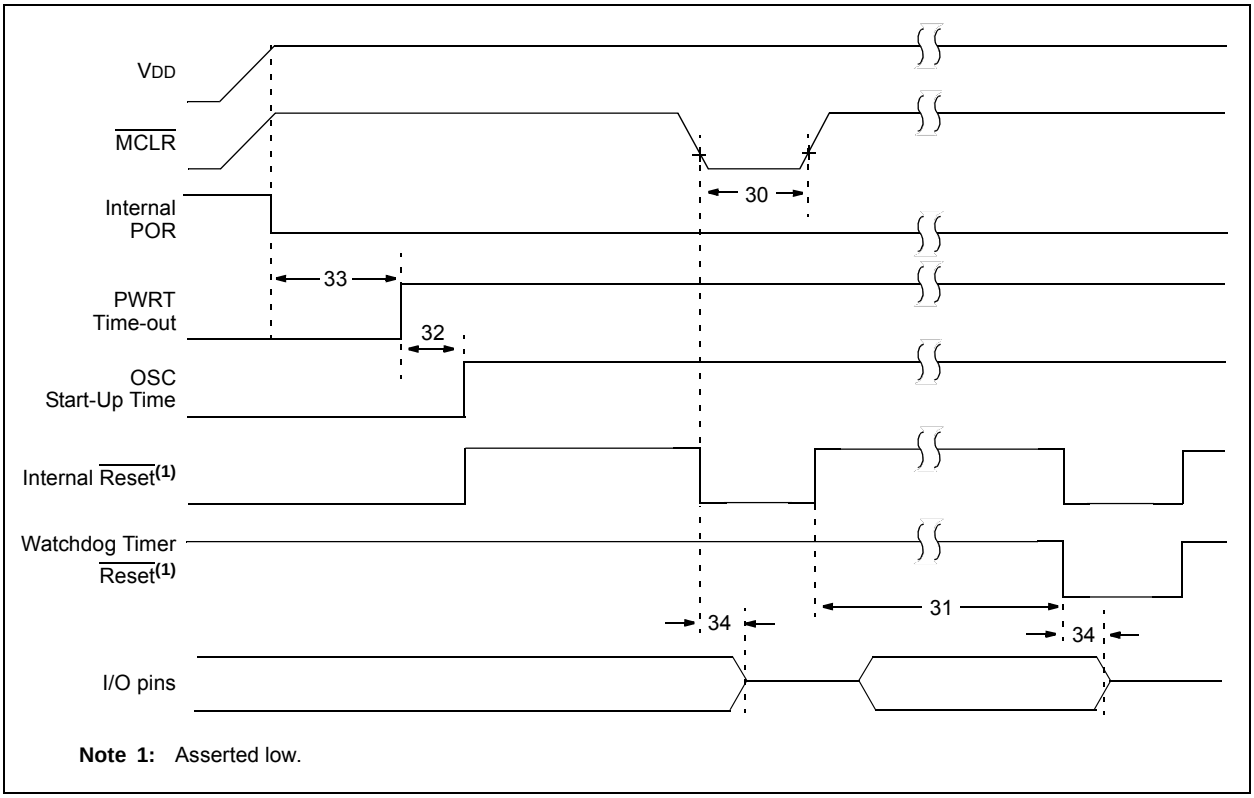

Note 1: Asserted low.

FIGURE 30-9: BROWN-OUT RESET TIMING AND CHARACTERISTICS

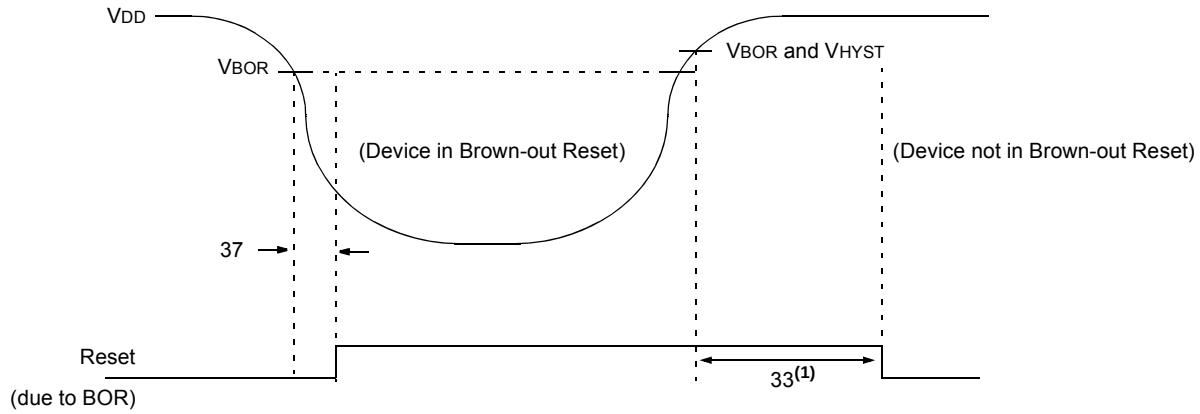

Note 1: 64 ms delay only if $\overline{\text{PWRTE}}$ bit in the Configuration Word 1 is programmed to '0'.
2 ms delay if $\overline{\text{PWRTE}}$ = 0.

© 2010-2015 Microchip Technology Inc.

TABLE 30-5: RESET, WATCHDOG TIMER, OSCILLATOR START-UP TIMER, POWER-UP TIMER AND BROWN-OUT RESET PARAMETERS

Standard Operating Conditions (unless otherwise stated) Operating Temperature -40°C ≤ TA ≤ +125°C							
Param No.	**Sym.**	**Characteristic**	**Min.**	**Typ†**	**Max.**	**Units**	**Conditions**
30	TMCL	$\overline{\text{MCLR}}$ Pulse Width (low)	2	—	—	μs	
31	TWDTLP	Watchdog Timer Time-out Period (No Prescaler)	12	16	20	ms	VDD = 3.3V-5V
32	TOST	Oscillator Start-up Timer Period(1)	—	1024	—	Tosc	
33*	TPWRT	Power-up Timer Period, $\overline{\text{PWRTE}}$ = 0	40	65	140	ms	
34*	TIOZ	I/O high-impedance from $\overline{\text{MCLR}}$ Low or Watchdog Timer Reset	—	—	2.0	μs	
35	VBOR	Brown-out Reset Voltage(2)	2.55 1.80	2.70 1.9	2.85 2.05	V V	BORV = 0 BORV = 1
36*	VHYST	Brown-out Reset Hysteresis	20	35	75	mV	-40°C to +85°C
37*	TBORDC	Brown-out Reset DC Response Time	0	1	35	μs	VDD ≤ VBOR

* These parameters are characterized but not tested.

† Data in "Typ" column is at 3.0V, 25°C unless otherwise stated. These parameters are for design guidance only and are not tested.

Note 1: By design, the Oscillator Start-up (OST) counts the first 1.024 cycles, independent of frequency.

2: To ensure these voltage tolerances, VDD and VSS must be capacitively decoupled as close to the device as possible. 0.1 μF and 0.01 μF values in parallel are recommended.

FIGURE 30-10: TIMER0 AND TIMER1 EXTERNAL CLOCK TIMINGS

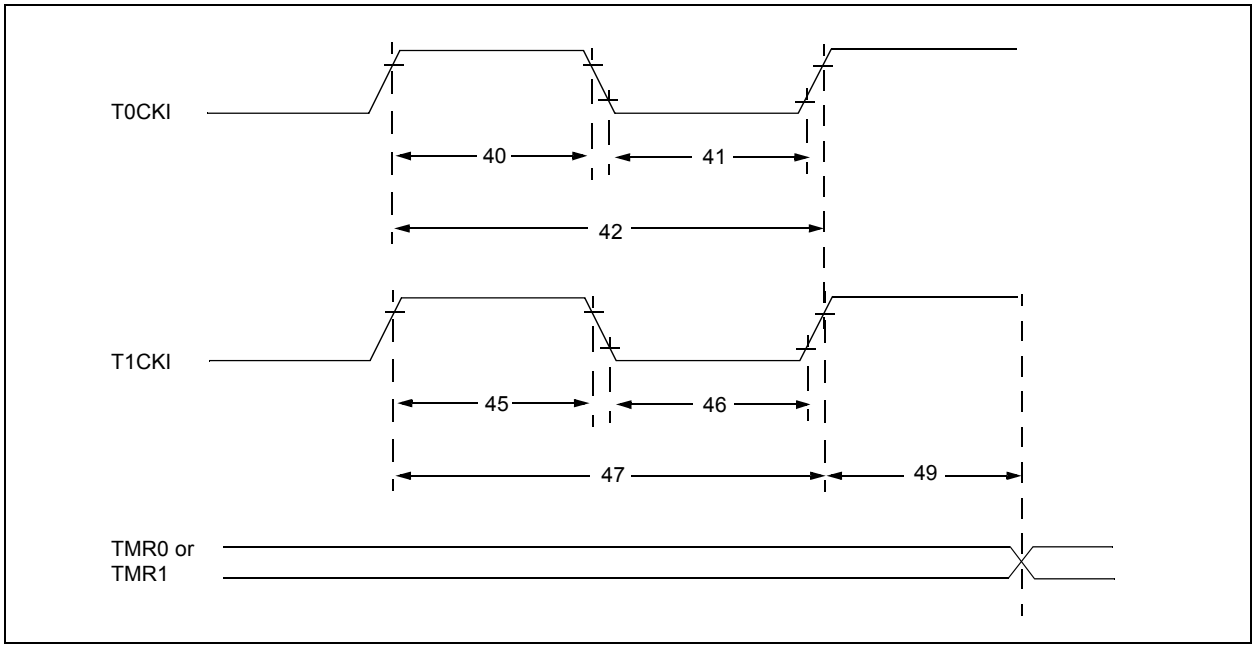

TABLE 30-6: TIMER0 AND TIMER1 EXTERNAL CLOCK REQUIREMENTS

Standard Operating Conditions (unless otherwise stated) Operating Temperature -40°C ≤ TA ≤ +125°C								
Param No.	**Sym.**	**Characteristic**		**Min.**	**Typ†**	**Max.**	**Units**	**Conditions**
40*	TT0H	T0CKI High Pulse Width	No Prescaler	0.5 TCY + 20	—	—	ns	
			With Prescaler	10	—	—	ns	
41*	TT0L	T0CKI Low Pulse Width	No Prescaler	0.5 TCY + 20	—	—	ns	
			With Prescaler	10	—	—	ns	
42*	TT0P	T0CKI Period		Greater of: 20 or TCY + 40 / N	—	—	ns	N = prescale value (2, 4, ..., 256)
45*	TT1H	T1CKI High Time	Synchronous, No Prescaler	0.5 TCY + 20	—	—	ns	
			Synchronous, with Prescaler	15	—	—	ns	
			Asynchronous	30	—	—	ns	
46*	TT1L	T1CKI Low Time	Synchronous, No Prescaler	0.5 TCY + 20	—	—	ns	
			Synchronous, with Prescaler	15	—	—	ns	
			Asynchronous	30	—	—	ns	
47*	TT1P	T1CKI Input Period	Synchronous	Greater of: 30 or TCY + 40 / N	—	—	ns	N = prescale value (1, 2, 4, 8)
			Asynchronous	60	—	—	ns	
48	FT1	Timer1 Oscillator Input Frequency Range (oscillator enabled by setting bit T1OSCEN)		32.4	32.768	33.1	kHz	
49*	TCKEZTMR1	Delay from External Clock Edge to Timer Increment		2 TOSC	—	7 TOSC	—	Timers in Sync mode

* These parameters are characterized but not tested.

† Data in "Typ" column is at 3.0V, 25°C unless otherwise stated. These parameters are for design guidance only and are not tested.

FIGURE 30-11: CAPTURE/COMPARE/PWM TIMINGS (CCP)

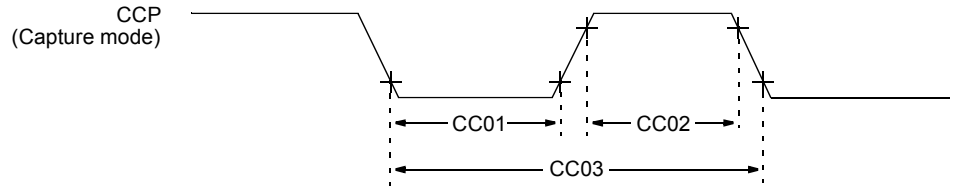

Note: Refer to Figure 30.5 for load conditions.

TABLE 30-7: CAPTURE/COMPARE/PWM REQUIREMENTS (CCP)

Standard Operating Conditions (unless otherwise stated) Operating Temperature -40°C ≤ TA ≤ +125°C								
Param No.	**Sym.**	**Characteristic**		**Min.**	**Typ†**	**Max.**	**Units**	**Conditions**
CC01*	TccL	CCP Input Low Time	No Prescaler	0.5TCY + 20	—	—	ns	
			With Prescaler	20	—	—	ns	
CC02*	TccH	CCP Input High Time	No Prescaler	0.5TCY + 20	—	—	ns	
			With Prescaler	20	—	—	ns	
CC03*	TccP	CCP Input Period		3TCY + 40 / N	—	—	ns	N = prescale value

* These parameters are characterized but not tested.

† Data in "Typ" column is at 3.0V, 25°C unless otherwise stated. These parameters are for design guidance only and are not tested.

© 2010-2015 Microchip Technology Inc.

TABLE 30-8: PIC16(L)F1824/8 A/D CONVERTER (ADC) CHARACTERISTICS (NOTE 1, 2, 3)

Operating Conditions (unless otherwise stated) V_{DD} = 3.0V, T_A = 25°C							
Param No.	**Sym.**	**Characteristic**	**Min.**	**Typ†**	**Max.**	**Units**	**Conditions**
AD01	NR	Resolution	—	—	10	bit	
AD02	EIL	Integral Error	—	—	±1.7	LSb	VREF = 3.0V
AD03	EDL	Differential Error	—	—	±1	LSb	No missing codes VREF = 3.0V
AD04	EOFF	Offset Error	—	—	±2.5	LSb	VREF = 3.0V
AD05	EGN	Gain Error	—	—	±2.0	LSb	VREF = 3.0V
AD06	VREF	Reference Voltage(4)	1.8	—	VDD	V	VREF = (VREF+ minus VREF-)
AD07	VAIN	Full-Scale Range	VSS	—	VREF	V	
AD08	ZAIN	Recommended Impedance of Analog Voltage Source	—	—	10	kΩ	Can go higher if external 0.01µF capacitor is present on input pin.

* These parameters are characterized but not tested.

† Data in "Typ" column is at 3.0V, 25°C unless otherwise stated. These parameters are for design guidance only and are not tested.

Note 1: Total Absolute Error includes integral, differential, offset and gain errors.

2: The A/D conversion result never decreases with an increase in the input voltage and has no missing codes.

3: ADC VREF is from external VREF, VDD pin or FVR, whichever is selected as reference input.

4: ADC Reference Voltage (REF+) is the selected input, VREF+ pin, VDD pin or the FVR Buffer1. When the FVR is selected as the reference input, the FVR Buffer1 output selection must be 2.048 or 4.096V (ADFVR<1:0> = 1x).

TABLE 30-9: PIC16(L)F1824/8 A/D CONVERSION REQUIREMENTS

Operating Conditions (unless otherwise stated) V_{DD} = 3.0V, T_A = 25°C							
Param No.	**Sym.**	**Characteristic**	**Min.**	**Typ†**	**Max.**	**Units**	**Conditions**
AD130*	TAD	A/D Clock Period	1.0	—	9.0	µs	TOSC-based
		A/D Internal RC Oscillator Period	1.0	2.5	6.0	µs	ADCS<1:0> = 11 (ADRC mode)
AD131	TCNV	Conversion Time (not including Acquisition Time)(1)	—	11	—	TAD	Set GO/$\overline{\text{DONE}}$ bit to conversion complete
AD132*	TACQ	Acquisition Time	—	5.0	—	µs	

* These parameters are characterized but not tested.

† Data in "Typ" column is at 3.0V, 25°C unless otherwise stated. These parameters are for design guidance only and are not tested.

Note 1: The ADRES register may be read on the following TCY cycle.

FIGURE 30-12: PIC16(L)F1824/8 A/D CONVERSION TIMING (NORMAL MODE)

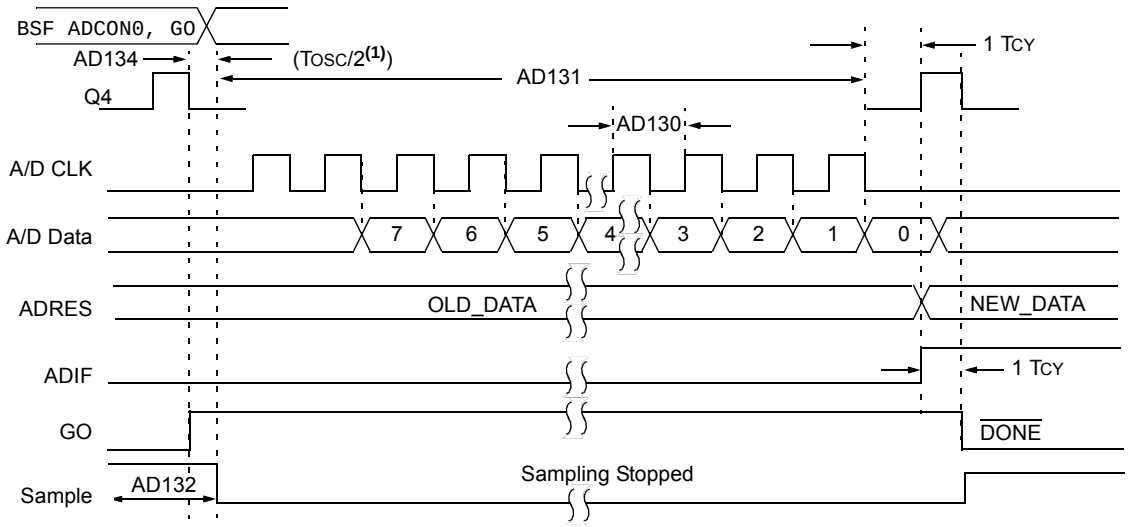

Note 1: If the A/D clock source is selected as RC, a time of TCY is added before the A/D clock starts. This allows the SLEEP instruction to be executed.

FIGURE 30-13: PIC16(L)F1824/8 A/D CONVERSION TIMING (SLEEP MODE)

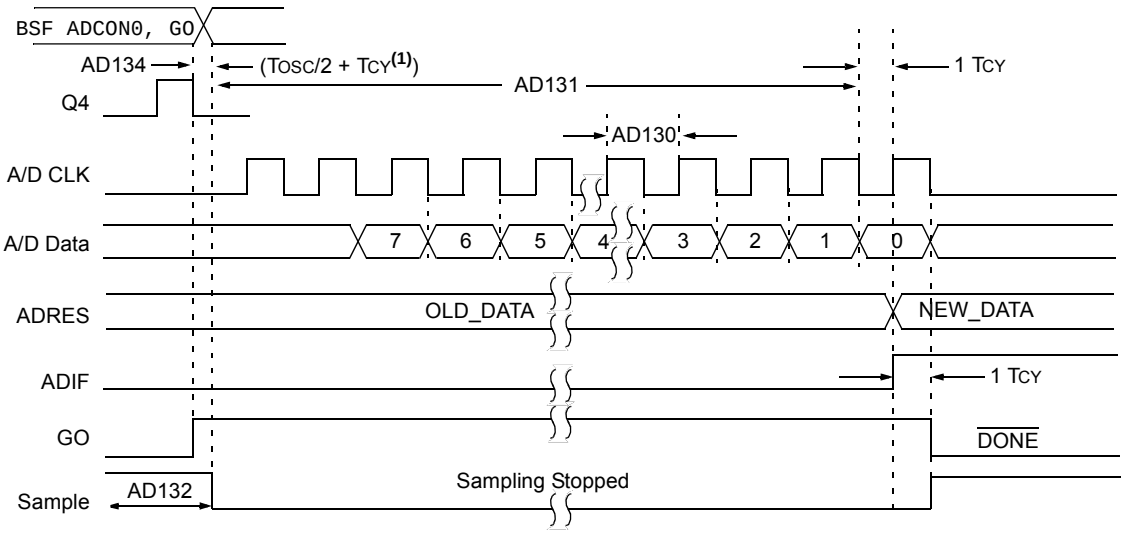

Note 1: If the A/D clock source is selected as RC, a time of TCY is added before the A/D clock starts. This allows the SLEEP instruction to be executed.

© 2010-2015 Microchip Technology Inc.

TABLE 30-10: COMPARATOR SPECIFICATIONS

Operating Conditions (unless otherwise stated) VDD = 3.0V, TA = 25°C							
Param No.	**Sym.**	**Characteristics**	**Min.**	**Typ.**	**Max.**	**Units**	**Comments**
CM01	VIOFF(1)	Input Offset Voltage	—	±7.5	±60	mV	High-Power mode, VICM = VDD/2
CM02	VICM	Input Common Mode Voltage	0	—	VDD	V	
CM03	CMRR	Common Mode Rejection Ratio	—	50	—	dB	
CM04A	TRESP(1)	Response Time Rising Edge	—	400	800	ns	High-Power mode
CM04B		Response Time Falling Edge	—	200	400	ns	High-Power mode
CM04C		Response Time Rising Edge	—	1200	—	ns	Low-Power mode
CM04D		Response Time Falling Edge	—	550	—	ns	Low-Power mode
CM05	TMC2OV	Comparator Mode Change to Output Valid*	—	—	10	µs	
CM06	CHYSTER	Comparator Hysteresis(2)	—	45	—	mV	CxHYS = 1

* These parameters are characterized but not tested.

Note 1: High-Power mode only.

2: Comparator Hysteresis is available when the CxHYS bit of the CMxCON0 register is enabled.

TABLE 30-11: DIGITAL-TO-ANALOG CONVERTER (DAC) SPECIFICATIONS

Operating Conditions (unless otherwise stated) VDD = 3.0V, TA = 25°C							
Param No.	**Sym.**	**Characteristics**	**Min.**	**Typ.**	**Max.**	**Units**	**Comments**
DAC01*	CLSB	Step Size	—	VDD/32	—	V	
DAC02*	CACC	Absolute Accuracy	—	—	± 1/2	LSb	
DAC03*	CR	Unit Resistor Value (R)	—	5K	—	Ω	
DAC04*	CST	Settling Time(1)	—	—	10	µs	

* These parameters are characterized but not tested.

Note 1: Settling time measured while DACR<4:0> transitions from '0000' to '1111'.

FIGURE 30-14: USART SYNCHRONOUS TRANSMISSION (MASTER/SLAVE) TIMING

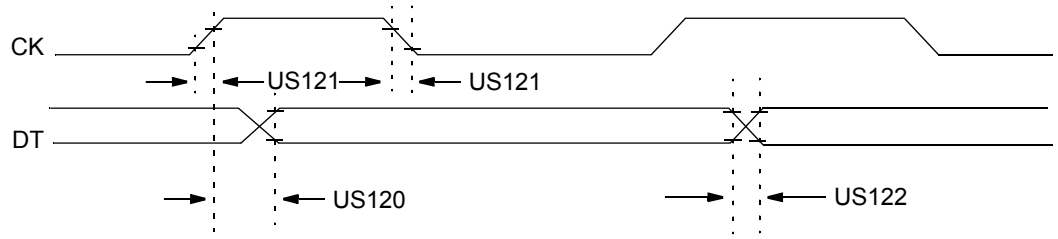

Note: Refer to Figure 30-5 for load conditions.

TABLE 30-12: USART SYNCHRONOUS TRANSMISSION REQUIREMENTS

Standard Operating Conditions (unless otherwise stated) Operating Temperature -40°C ≤ TA ≤ +125°C							
Param. No.	**Symbol**	**Characteristic**		**Min.**	**Max.**	**Units**	**Conditions**
US120	TCKH2DTV	SYNC XMIT (Master and Slave) Clock high to data-out valid	3.0-5.5V	—	80	ns	
			1.8-5.5V	—	100	ns	
US121	TCKRF	Clock out rise time and fall time (Master mode)	3.0-5.5V	—	45	ns	
			1.8-5.5V	—	50	ns	
US122	TDTRF	Data-out rise time and fall time	3.0-5.5V	—	45	ns	
			1.8-5.5V	—	50	ns	

FIGURE 30-15: USART SYNCHRONOUS RECEIVE (MASTER/SLAVE) TIMING

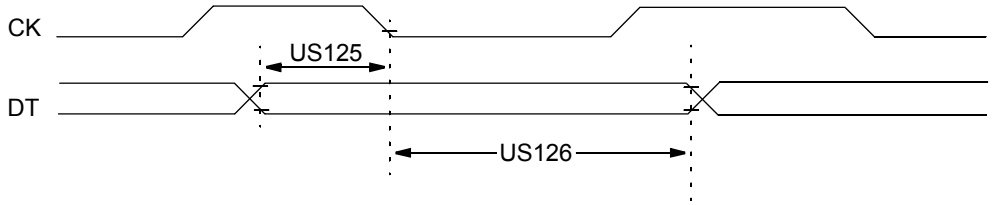

Note: Refer to Figure 30-5 for load conditions.

TABLE 30-13: USART SYNCHRONOUS RECEIVE REQUIREMENTS

Standard Operating Conditions (unless otherwise stated) Operating Temperature -40°C ≤ TA ≤ +125°C						
Param. No.	**Symbol**	**Characteristic**	**Min.**	**Max.**	**Units**	**Conditions**
US125	TDTV2CKL	SYNC RCV (Master and Slave) Data-hold before CK ↓ (DT hold time)	10	—	ns	
US126	TCKL2DTL	Data-hold after CK ↓ (DT hold time)	15	—	ns	

© 2010-2015 Microchip Technology Inc.

FIGURE 30-16: SPI MASTER MODE TIMING (CKE = 0, SMP = 0)

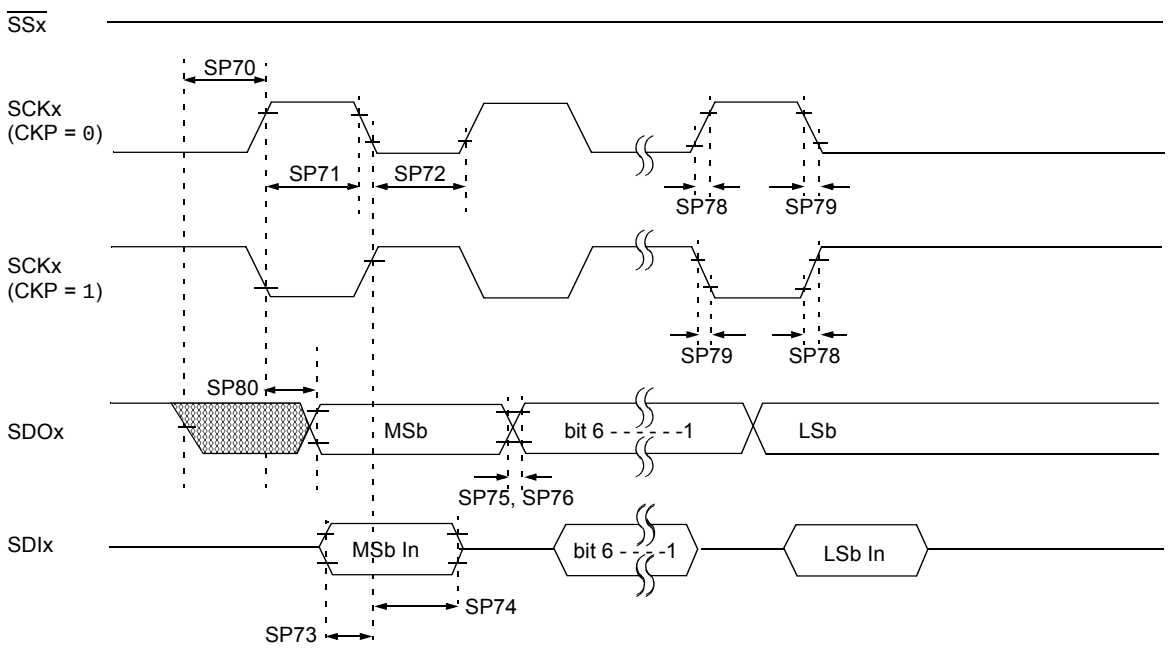

Note: Refer to Figure 30-5 for load conditions.

FIGURE 30-17: SPI MASTER MODE TIMING (CKE = 1, SMP = 1)

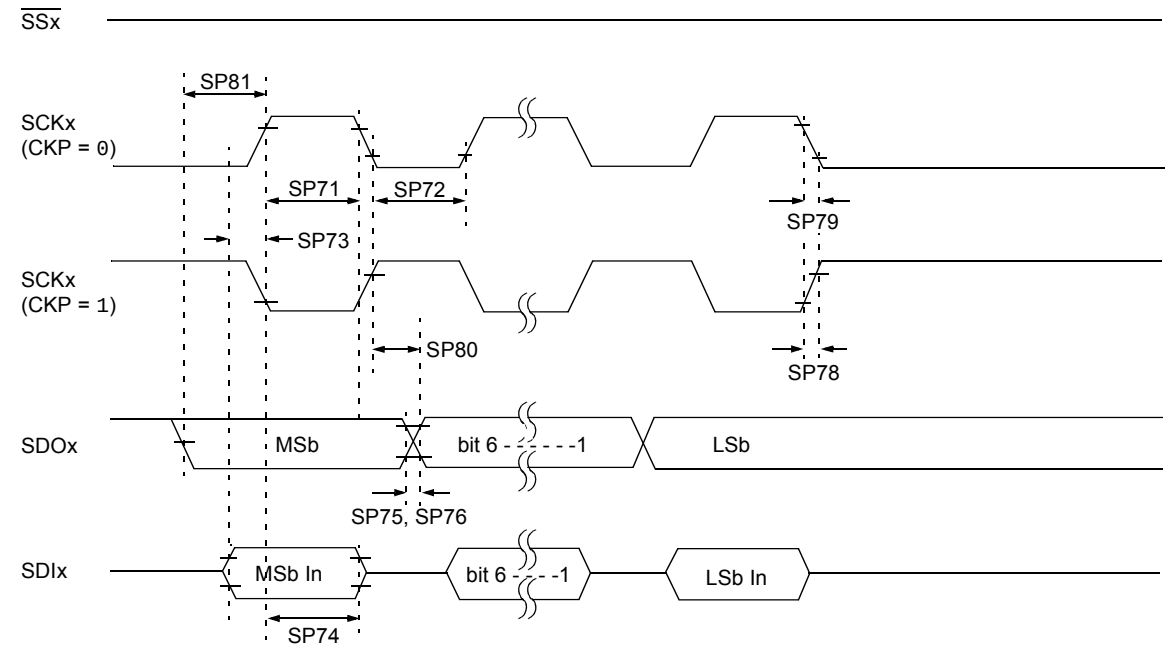

Note: Refer to Figure 30-5 for load conditions.

FIGURE 30-18: SPI SLAVE MODE TIMING (CKE = 0)

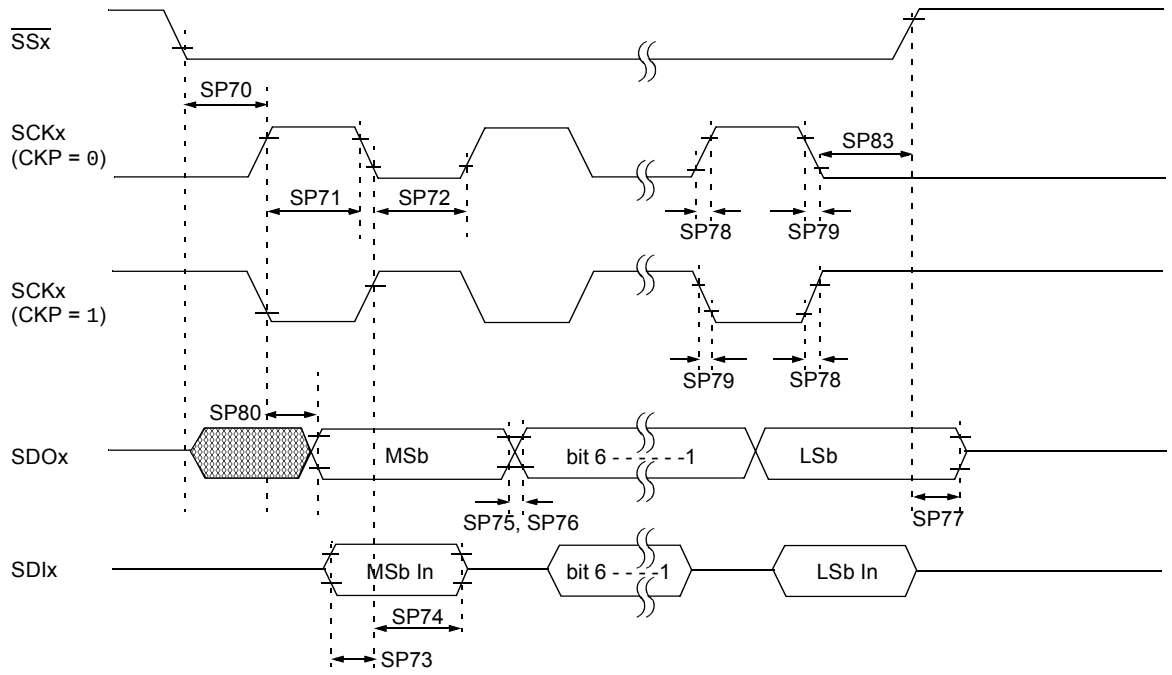

Note: Refer to Figure 30-5 for load conditions.

FIGURE 30-19: SPI SLAVE MODE TIMING (CKE = 1)

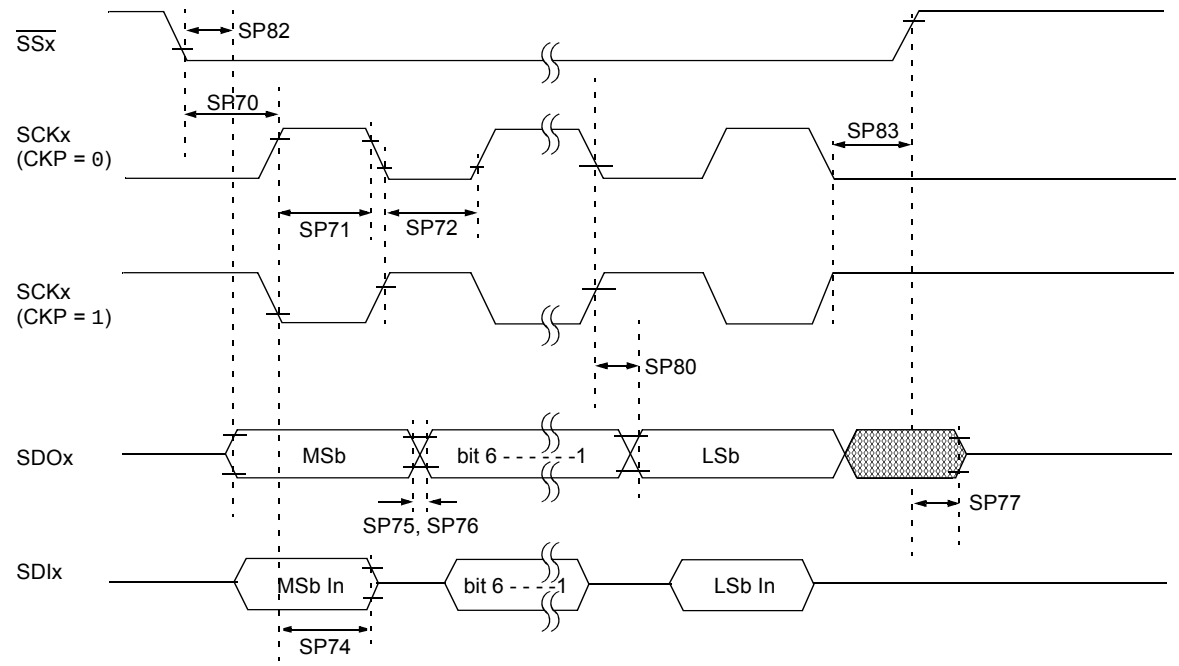

Note: Refer to Figure 30-5 for load conditions.

© 2010-2015 Microchip Technology Inc.

TABLE 30-14: SPI MODE REQUIREMENTS

Param No.	Symbol	Characteristic		Min.	Typ†	Max.	Units	Conditions
SP70*	TssL2scH, TssL2scL	$\overline{SSx}\downarrow$ to SCKx$\downarrow$ or SCKx$\uparrow$ input		2.25 Tcy	—	—	ns	
SP71*	TscH	SCKx input high time (Slave mode)		Tcy + 20	—	—	ns	
SP72*	TscL	SCKx input low time (Slave mode)		Tcy + 20	—	—	ns	
SP73*	TdiV2scH, TdiV2scL	Setup time of SDIx data input to SCKx edge		100	—	—	ns	
SP74*	TscH2diL, TscL2diL	Hold time of SDIx data input to SCKx edge		100	—	—	ns	
SP75*	TdoR	SDO data output rise time	3.0-5.5V	—	10	25	ns	
			1.8-5.5V	—	25	50	ns	
SP76*	TdoF	SDOx data output fall time		—	10	25	ns	
SP77*	TssH2doZ	$\overline{SSx}\uparrow$ to SDOx output high-impedance		10	—	50	ns	
SP78*	TscR	SCKx output rise time (Master mode)	3.0-5.5V	—	10	25	ns	
			1.8-5.5V	—	25	50	ns	
SP79*	TscF	SCKx output fall time (Master mode)		—	10	25	ns	
SP80*	TscH2doV, TscL2doV	SDOx data output valid after SCKx edge	3.0-5.5V	—	—	50	ns	
			1.8-5.5V	—	—	145	ns	
SP81*	TdoV2scH, TdoV2scL	SDOx data output setup to SCKx edge		Tcy	—	—	ns	
SP82*	TssL2doV	SDOx data output valid after $\overline{SS}\downarrow$ edge		—	—	50	ns	
SP83*	TscH2ssH, TscL2ssH	$\overline{SSx}\uparrow$ after SCKx edge		1.5Tcy + 40	—	—	ns	

* These parameters are characterized but not tested.

† Data in “Typ” column is at 3.0V, 25°C unless otherwise stated. These parameters are for design guidance only and are not tested.

FIGURE 30-20: I²C™ BUS START/STOP BITS TIMING

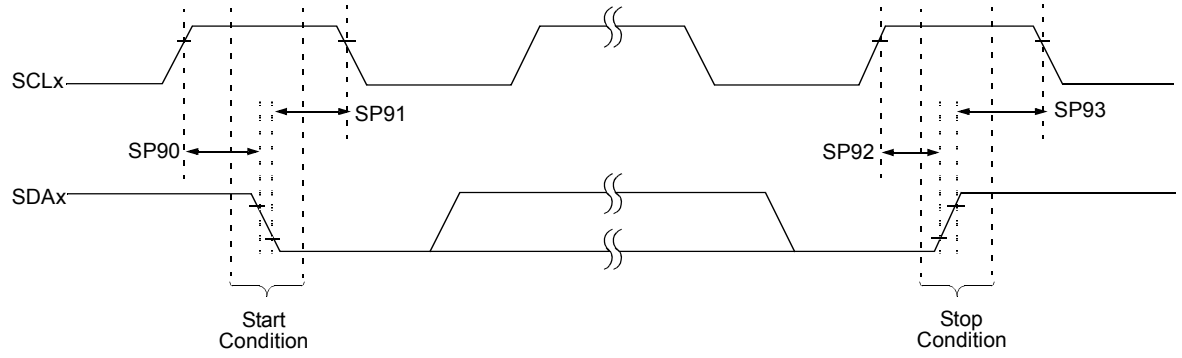

Note: Refer to Figure 30-5 for load conditions.

TABLE 30-15: I²C™ BUS START/STOP BITS REQUIREMENTS

Param No.	Symbol	Characteristic		Min.	Typ	Max.	Units	Conditions
SP90*	TSU:STA	Start condition Setup time	100 kHz mode	4700	—	—	ns	Only relevant for Repeated Start Condition
			400 kHz mode	600	—	—		
SP91*	THD:STA	Start condition Hold time	100 kHz mode	4000	—	—	ns	After this period, the first clock pulse is generated
			400 kHz mode	600	—	—		
SP92*	TSU:STO	Stop condition Setup time	100 kHz mode	4700	—	—	ns	
			400 kHz mode	600	10	25		
SP93	THD:STO	Stop condition Hold time	100 kHz mode	4000	25	50	ns	
			400 kHz mode	600	10	25		

* These parameters are characterized but not tested.

FIGURE 30-21: I²C™ BUS DATA TIMING

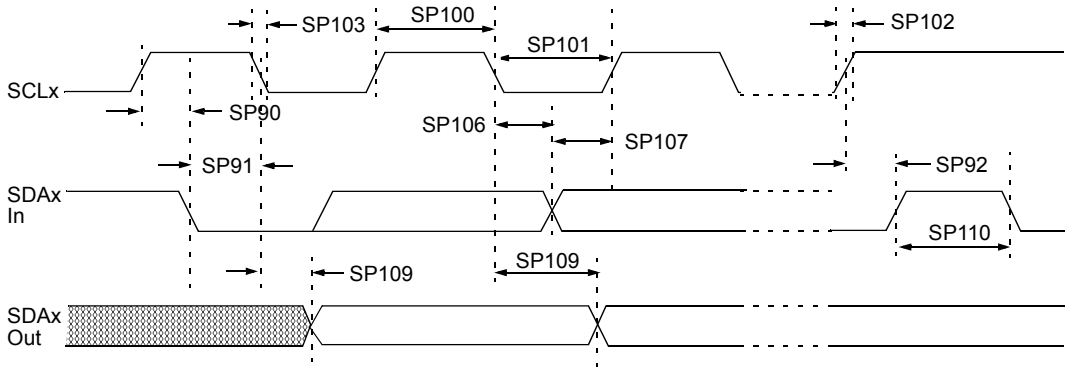

Note: Refer to Figure 30-5 for load conditions.

© 2010-2015 Microchip Technology Inc.

TABLE 30-16: I²C™ BUS DATA REQUIREMENTS

Param. No.	Symbol	Characteristic		Min.	Max.	Units	Conditions
SP100*	THIGH	Clock high time	100 kHz mode	4.0	—	µs	Device must operate at a minimum of 1.5 MHz
			400 kHz mode	0.6	—	µs	Device must operate at a minimum of 10 MHz
			SSPx module	1.5TCY	—	—	
SP101*	TLOW	Clock low time	100 kHz mode	4.7	—	µs	Device must operate at a minimum of 1.5 MHz
			400 kHz mode	1.3	—	µs	Device must operate at a minimum of 10 MHz
			SSPx module	1.5TCY	—	—	
SP102*	TR	SDAx and SCLx rise time	100 kHz mode	—	1000	ns	
			400 kHz mode	20 + 0.1CB	300	ns	CB is specified to be from 10-400 pF
SP103*	TF	SDAx and SCLx fall time	100 kHz mode	—	250	ns	
			400 kHz mode	20 + 0.1CB	250	ns	CB is specified to be from 10-400 pF
SP106*	THD:DAT	Data input hold time	100 kHz mode	0	—	ns	
			400 kHz mode	0	0.9	µs	
SP107*	TSU:DAT	Data input setup time	100 kHz mode	250	—	ns	**(Note 2)**
			400 kHz mode	100	—	ns	
SP109*	TAA	Output valid from clock	100 kHz mode	—	3500	ns	**(Note 1)**
			400 kHz mode	—	—	ns	
SP110*	TBUF	Bus free time	100 kHz mode	4.7	—	µs	Time the bus must be free before a new transmission can start
			400 kHz mode	1.3	—	µs	
SP111	CB	Bus capacitive loading		—	400	pF	

* These parameters are characterized but not tested.

Note 1: As a transmitter, the device must provide this internal minimum delay time to bridge the undefined region (min. 300 ns) of the falling edge of SCLx to avoid unintended generation of Start or Stop conditions.

2: A Fast mode (400 kHz) I²C™ bus device can be used in a Standard mode (100 kHz) I²C bus system, but the requirement TSU:DAT ≥ 250 ns must then be met. This will automatically be the case if the device does not stretch the low period of the SCLx signal. If such a device does stretch the low period of the SCLx signal, it must output the next data bit to the SDAx line TR max. + TSU:DAT = 1000 + 250 = 1250 ns (according to the Standard mode I²C bus specification), before the SCLx line is released.

TABLE 30-17: CAP SENSE OSCILLATOR SPECIFICATIONS

Param. No.	Symbol	Characteristic		Min.	Typ†	Max.	Units	Conditions
CS01	ISRC	Current Source	High	—	-8	—	μA	
			Medium	—	-1.5	—	μA	
			Low	—	-0.3	—	μA	
CS02	ISNK	Current Sink	High	—	7.5	—	μA	
			Medium	—	1.5	—	μA	
			Low	—	0.25	—	μA	
CS03	VCTH	Cap Threshold		—	0.8	—	V	
CS04	VCTL	Cap Threshold		—	0.4	—	V	
CS05	VCHYST	Cap Hysteresis (VCTH - VCTL)	High	—	525	—	mV	
			Medium	—	375	—	mV	
			Low	—	300	—	mV	

† Data in “Typ” column is at 3.0V, 25°C unless otherwise stated. These parameters are for design guidance only and are not tested.

FIGURE 30-22: CAP SENSE OSCILLATOR

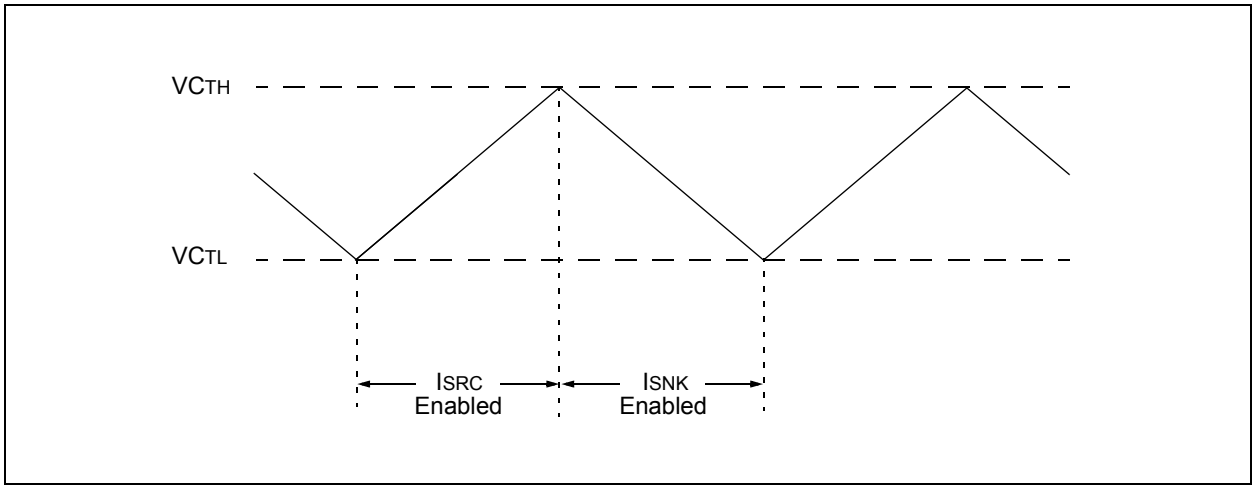

© 2010-2015 Microchip Technology Inc.

30.9 High Temperature Operation

This section outlines the specifications for the following devices operating in the high temperature range between -40°C and 150°C.(2)

- PIC16F1824(4)
- PIC16F1828(4)

When the value of any parameter is identical for both the 125°C Extended and the 150°C High Temp. temperature ranges, then that value will be found in the standard specification tables shown earlier in this chapter, under the fields listed for the 125°C Extended temperature range. If the value of any parameter is unique to the 150°C High Temp. temperature range, then it will be listed here, in this section of the data sheet.

If a Silicon Errata exists for the product and it lists a modification to the 125°C Extended temperature range value, one that is also shared at the 150°C High Temp. temperature range, then that modified value will apply to both temperature ranges.

Note 1: Writes are **not allowed** for Flash program memory above 125°C.

2: AEC-Q100 reliability testing for devices intended to operate at 150°C is 1,000 hours. Any design in which the total operating time from 125°C to 150°C will be greater than 1,000 hours is not warranted without prior written approval from Microchip Technology Inc.

3: The temperature range indicator in the catalog part number and device marking is “H” for -40°C to 150°C.

Example: PIC16F1824T-H/SL indicates the device is shipped in a Tape and Reel configuration, in the SOIC package, and is rated for operation from -40°C to 150°C.

4: The low voltage versions of these devices, PIC16LF1824 and PIC16LF1828, are not released for operation above +125°C.

5: Errata Sheet DS80510 lists various mask revisions. 150°C operation applies only to revisions A5 and later.

6: The Capacitive Sensing module (CPS) should not be used in high temperature devices. Function and its parametrics are not warranted.

7: Only SOIC (SL), TSSOP (ST), SSOP (SS) and QFN (ML) packages will be offered, not PDIP or UQFN.

TABLE 30-18: ABSOLUTE MAXIMUM RATINGS

Parameter	Condition	Value
Max. Current: V_{DD}	Source	15 mA
Max. Current: V_{SS}	Sink	15 mA
Max. Current: Pin	Source	5 mA
Max. Current: Pin	Sink	5 mA
Max. Storage Temperature	—	-65°C to 155°C
Max. Junction Temperature	—	+155°C
Ambient Temperature under Bias	—	-40°C to +150°C

Note: Stresses above those listed under *Absolute Maximum Ratings* may cause permanent damage to the device. This is a stress rating only, and functional operation of the device at those or any other conditions above those indicated in the operation listings of this specification is not implied. Exposure above maximum rating conditions for extended periods may affect device reliability.

FIGURE 30-23: PIC16F1824/8 VOLTAGE FREQUENCY GRAPH, -40°C ≤ TA ≤ +150°C

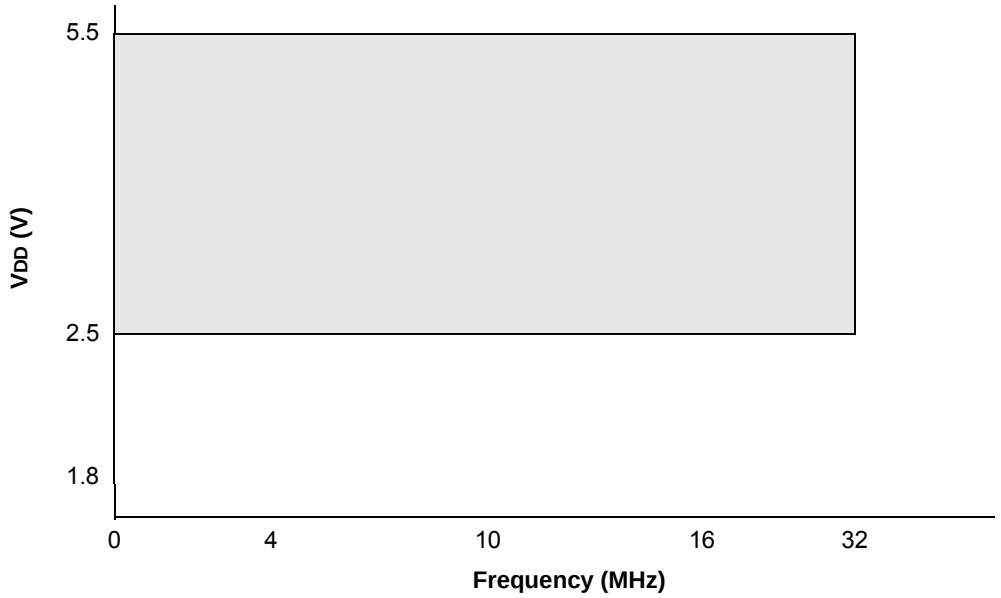

Note 1: The shaded region indicates the permissible combinations of voltage and frequency.
2: Refer to Table 30-1 for each Oscillator mode's supported frequencies.

FIGURE 30-24: HFINTOSC FREQUENCY ACCURACY OVER DEVICE VDD AND TEMPERATURE

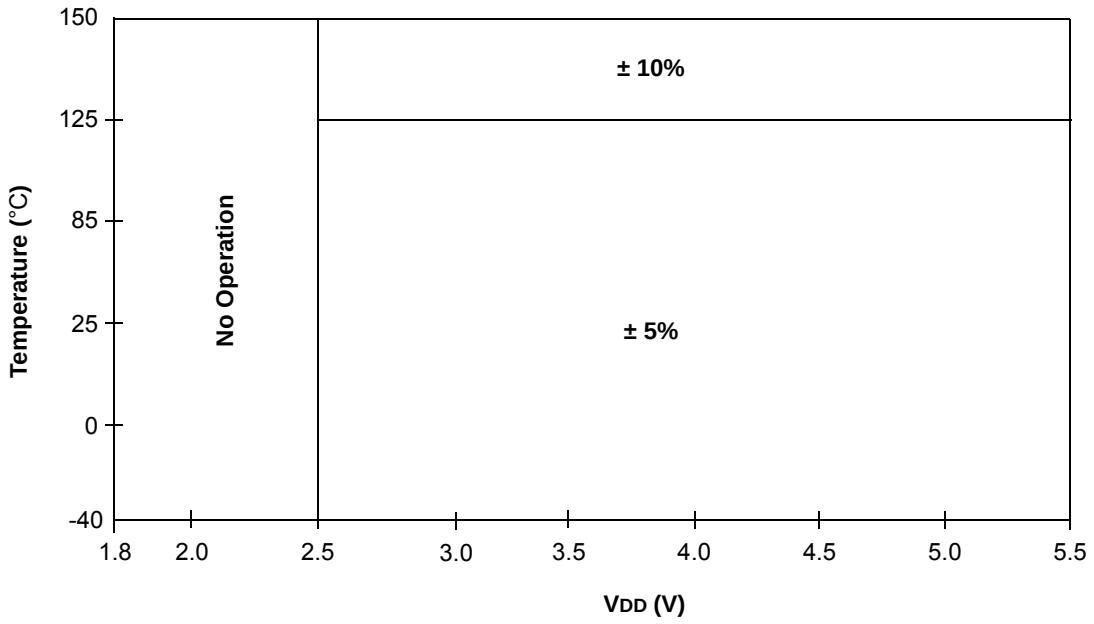

© 2010-2015 Microchip Technology Inc.

TABLE 30-19: DC CHARACTERISTICS FOR PIC16F1824/8-H (High Temp.)

PIC16F1824/8			Standard Operating Conditions: (unless otherwise stated) Operating Temperature: -40°C ≤ TA ≤ +150°C for High Temperature				
Param No.	**Sym.**	**Characteristics**	**Min.**	**Typ.**	**Max.**	**Units**	**Condition**
D001	VDD	Supply Voltage	2.5	—	5.5	V	FOSC ≤ 32 MHz **(Note 2)**
D002*	VDR	RAM Data Retention Voltage(1)	2.1	—	5.5	V	Device in Sleep mode
D003	VADFVR	Fixed Voltage Reference Voltage for ADC	-10	—	8	%	1.024V, VDD ≥ 2.5V 2.048V, VDD ≥ 2.5V 4.096V, VDD ≥ 4.75V
D003A	VCDAFVR	Fixed Voltage Reference Voltage for ADC	-13	—	9	%	1.024V, VDD ≥ 2.5V 2.048V, VDD ≥ 2.5V 4.096V, VDD ≥ 4.75V

* These parameters are characterized but not tested.

† Data in "Typ" column is at 3.0V, 25°C unless otherwise stated. These parameters are for design guidance only and are not tested.

Note 1: This is the limit to which VDD can be lowered in Sleep mode without losing RAM data.

2: PLL required for 32 MHz operation.

TABLE 30-20: DC CHARACTERISTICS FOR IDD SPECIFICATIONS FOR PIC16F1824/8-H (High Temp.)

PIC16F1824/8		Standard Operating Conditions: (unless otherwise stated) Operating Temperature: -40°C ≤ TA ≤ +150°C for High Temperature					
Param No.	**Device Characteristics**	**Min.**	**Typ.**	**Max.**	**Units**	**Condition**	
						VDD	**Note**
	Supply Voltage (IDD)(1,2)						
D010A		—	—	70	μA	3.0	FOSC ≤ 32 kHz LP Oscillator mode
		—	—	75	μA	5.0	
D015		—	—	75	μA	3.0	FOSC ≤ 31 kHz LFINTOSC mode
		—	—	80	μA	5.0	

† Data in "Typ" column is at 3.0V, 25°C unless otherwise stated. These parameters are for design guidance only and are not tested.

Note 1: The test conditions for all IDD measurements in active operation mode are: OSC1 = external square wave, from rail-to-rail; all I/O pins tri-stated, pulled to VDD; $\overline{MCLR}$ = VDD; WDT disabled.

2: The supply current is mainly a function of the operating voltage and frequency. Other factors, such as I/O pin loading and switching rage, oscillator type, internal code execution pattern, and temperature, also have an impact on the current consumption.

TABLE 30-21: DC CHARACTERISTICS FOR IPD SPECIFICATIONS FOR PIC16F1824/8-H (High Temp.)

PIC16F1824/8		Standard Operating Conditions: (unless otherwise stated) Operating Temperature: -40°C ≤ TA ≤ +150°C for High Temperature					
Param No.	Device Characteristics	Min.	Typ.	Max.	Units	Condition	
						VDD	Note
	Power-Down Base Current (IPD)(2)						
D022		—	—	60	µA	3.0	WDT, BOR, FVR, and T1OSC disabled, all Peripherals Inactive
		—	—	75	µA	5.0	
D023		—	—	60	µA	3.0	LPWDT Current **(Note 1)**
		—	—	75	µA	5.0	
D023A		—	—	75	µA	3.0	FVR current **(Note 1)**
		—	—	120	µA	5.0	
D024		—	—	55	µA	3.0	BOR Current **(Note 1)**
		—	—	75	µA	5.0	
D025		—	—	65	µA	3.0	T1OSC Current **(Note 1)**
		—	—	80	µA	5.0	
D026		—	—	55	µA	3.0	A/D Current **(Note 1, Note 3)**, no conversion in progress
		—	—	70	µA	5.0	
D027		—	—	—	—	—	Cap Sense module is not intended for use in high temperature devices
D028		—	—	70	µA	3.0	Comparator Current, Low-Power mode **(Note 1)**
		—	—	90	µA	5.0	
D028B		—	—	100	µA	3.0	Comparator Current, High-Power mode **(Note 1)**
		—	—	115	µA	5.0	

† Data in "Typ" column is at 3.0V, 25°C unless otherwise stated. These parameters are for design guidance only and are not tested.

Note 1: The peripheral current is the sum of the base IDD or IPD and the additional current consumed when this peripheral is enabled. The peripheral ∆ current can be determined by subtracting the base IDD or IPD current from this limit. Max values should be used when calculating total current consumption.

2: The power-down current in Sleep mode does not depend on the oscillator type. Power-down current is measured with the part in Sleep mode, with all I/O pins set to inputs state and tied to VDD.

3: A/D oscillator source is FRC.

© 2010-2015 Microchip Technology Inc.

TABLE 30-22: MEMORY PROGRAMMING REQUIREMENTS FOR PIC16F1824/8-H (High Temp.)

PIC16F1824/8		Standard Operating Conditions: (unless otherwise stated) Operating Temperature: -40°C ≤ TA ≤ +150°C for High Temperature					
Param No.	**Sym.**	**Characteristic**	**Min.**	**Typ.**	**Max.**	**Units**	**Conditions**
		Data EEPROM Memory					
D116	ED	Byte Endurance	50K	—	—	E/W	-40°C to +150°C
D118	TDEW	Erase/Write Cycle Time	—	—	6.0	ms	-40°C to +150°C
D119	TRETD	Data Retention	—	20	—	Years	≤ 50K Programming cycles
		Program Flash Memory					
D121	EP	Cell Endurance	—	—	—	—	Programming the Flash memory above +125°C is not permitted
D124	TRETD	Data Retention	—	20	—	Years	

TABLE 30-23: OSCILLATOR PARAMETERS FOR PIC16F1824/8-H (High Temp.)

PIC16F1824/8			Standard Operating Conditions: (unless otherwise stated) Operating Temperature: -40°C ≤ TA ≤ +150°C for High Temperature					
Param No.	**Sym.**	**Characteristic**	**Frequency Tolerance**	**Min.**	**Typ.**	**Max.**	**Units**	**Conditions**
OS08	HFOSC	Int. Calibrated HFINTOSC Freq.(1)	±5%	—	16.0	—	MHz	-40°C ≤ TA ≤ 125°C VDD ≥ 2.5V
			±10%	—	16.0	—	MHz	-40°C ≤ TA ≤ 150°C VDD ≥ 2.5V
OS08A	MFOSC	Int. Calibrated MFINTOSC Freq.(1)	±5%	—	500	—	kHz	-40°C ≤ TA ≤ 125°C VDD ≥ 2.5V
			±10%	—	500	—	kHz	-40°C ≤ TA ≤ 150°C VDD ≥ 2.5V
OS09	LFOSC	Internal LFINTOSC Freq.	±35%	—	31	—	kHz	-40°C ≤ TA ≤ 150°C VDD ≥ 2.5V

† Data in "Typ" column is at 3.0V, 25°C unless otherwise stated. These parameters are for design guidance only and are not tested.

Note 1: To ensure these oscillator frequency tolerances, VDD and VSS must be capacitively decoupled as close to the device as possible. 0.1 µF and 0.01 µF values in parallel are recommended.

TABLE 30-24: RESET, WATCHDOG TIMER, OSCILLATOR START-UP TIMER, POWER-UP TIMER AND BROWN-OUT RESET PARAMETERS FOR PIC16F1824/8-H (High Temp.)

PIC16F1824/8			Standard Operating Conditions: (unless otherwise stated) Operating Temperature: -40°C ≤ TA ≤ +150°C for High Temperature				
Param No.	**Sym.**	**Characteristic**	**Min.**	**Typ.**	**Max.**	**Units**	**Conditions**
31	TWDTLP	Low-Power Watchdog Timer Time-out Period (No Prescaler)	10	16	24	ms	VDD = 3.3V-5V 1:16 Prescaler used
35	VBOR	Brown-out Reset Voltage(1)	2.50 —	2.70 —	2.90 —	V —	BORV = 0 BORV = 1

† Data in "Typ" column is at 3.0V, 25°C unless otherwise stated. These parameters are for design guidance only and are not tested.

Note 1: To ensure these voltage tolerances, VDD and VSS must be capacitively decoupled as close to the device as possible. 0.1 µF and 0.01 µF values in parallel are recommended.

TABLE 30-25: A/D CONVERTER (ADC) CHARACTERISTICS FOR PIC16F1824/8-H (High Temp.)

PIC16F1824/8			Standard Operating Conditions: (unless otherwise stated) Operating Temperature: -40°C ≤ TA ≤ +150°C for High Temperature				
Param No.	**Sym.**	**Characteristic**	**Min.**	**Typ.**	**Max.**	**Units**	**Conditions**
AD04	EOFF	Offset Error	—	—	3.5	LSB	No missing codes VREF = 3.0V

† Data in "Typ" column is at 3.0V, 25°C unless otherwise stated. These parameters are for design guidance only and are not tested.

Note 1: Total Absolute Error includes integral, differential, offset and gain errors.

2: The A/D conversion result never decreases with an increase in the input voltage and has no missing codes.

3: ADC VREF is from external VREF, VDD pin or FVR, whichever is selected as reference input.

TABLE 30-26: COMPARATOR SPECIFICATIONS FOR PIC16F1824/8-H (High Temp.)

PIC16F1824/8			Standard Operating Conditions: (unless otherwise stated) Operating Temperature: -40°C ≤ TA ≤ +150°C for High Temperature				
Param No.	**Sym.**	**Characteristic**	**Min.**	**Typ.**	**Max.**	**Units**	**Conditions**
CM01	VIOFF	Input Offset Voltage	—	—	±70	mV	High-Power mode, VICM = VDD/2

TABLE 30-27: CAP SENSE OSCILLATOR SPECIFICATIONS FOR PIC16F1824/8-H (High Temp.)

PIC16F1824/8			Standard Operating Conditions: (unless otherwise stated) Operating Temperature: -40°C ≤ TA ≤ +150°C for High Temperature				
Param No.	**Sym.**	**Characteristic**	**Min.**	**Typ.**	**Max.**	**Units**	**Conditions**
All	All	All	—	—	—	—	This module is not intended for use in high temperature devices.

© 2010-2015 Microchip Technology Inc.

31.0 DC AND AC CHARACTERISTICS GRAPHS AND CHARTS

The graphs and tables provided in this section are for **design guidance** and are **not tested**.

In some graphs or tables, the data presented are **outside specified operating range** (i.e., outside specified VDD range). This is for **information only** and devices are ensured to operate properly only within the specified range.

Note:	The graphs and tables provided following this note are a statistical summary based on a limited number of samples and are provided for informational purposes only. The performance characteristics listed herein are not tested or guaranteed. In some graphs or tables, the data presented may be outside the specified operating range (e.g., outside specified power supply range) and therefore, outside the warranted range.

"Typical" represents the mean of the distribution at 25°C. "MAXIMUM", "Max.", "MINIMUM" or "Min." represents (mean + 3σ) or (mean - 3σ) respectively, where σ is a standard deviation, over each temperature range.

FIGURE 31-1: IDD, LP OSCILLATOR MODE (FOSC = 32 kHz), PIC16LF1824/8 ONLY

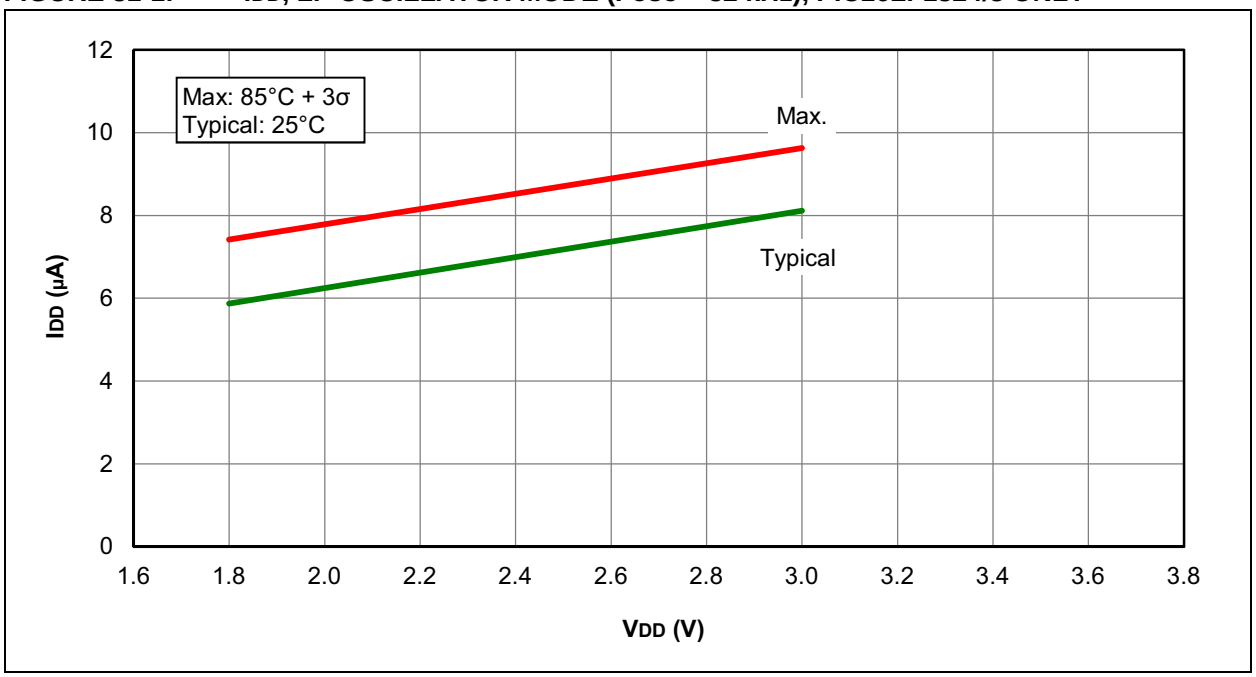

FIGURE 31-2: IDD, LP OSCILLATOR MODE (FOSC = 32 kHz), PIC16F1824/8 ONLY

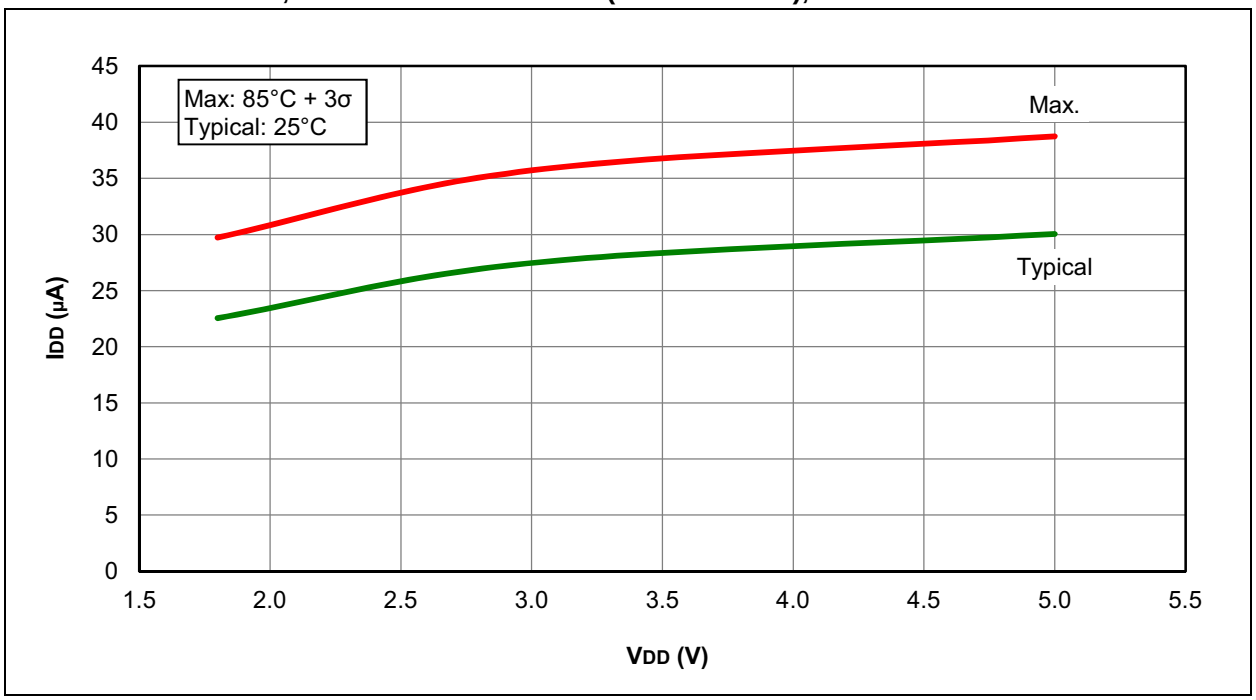

© 2010-2015 Microchip Technology Inc.

FIGURE 31-3: IDD TYPICAL, XT AND EXTRC OSCILLATOR, PIC16LF1824/8 ONLY

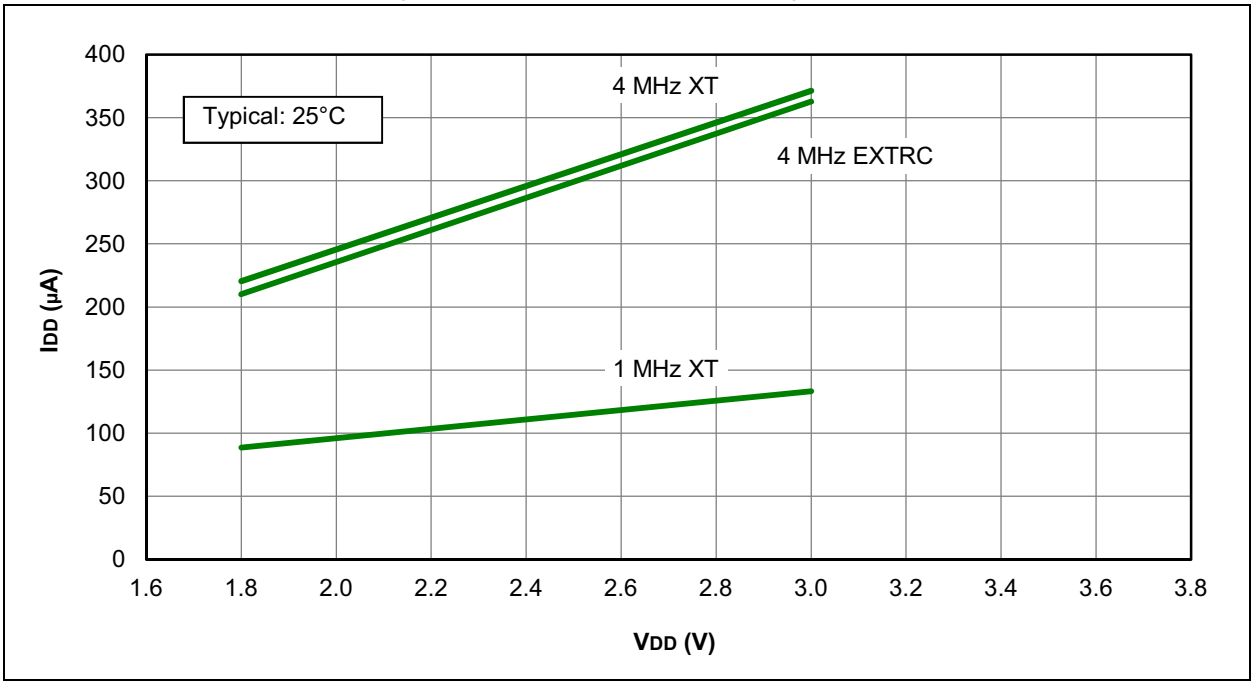

FIGURE 31-4: IDD MAXIMUM, XT AND EXTRC OSCILLATOR, PIC16LF1824/8 ONLY

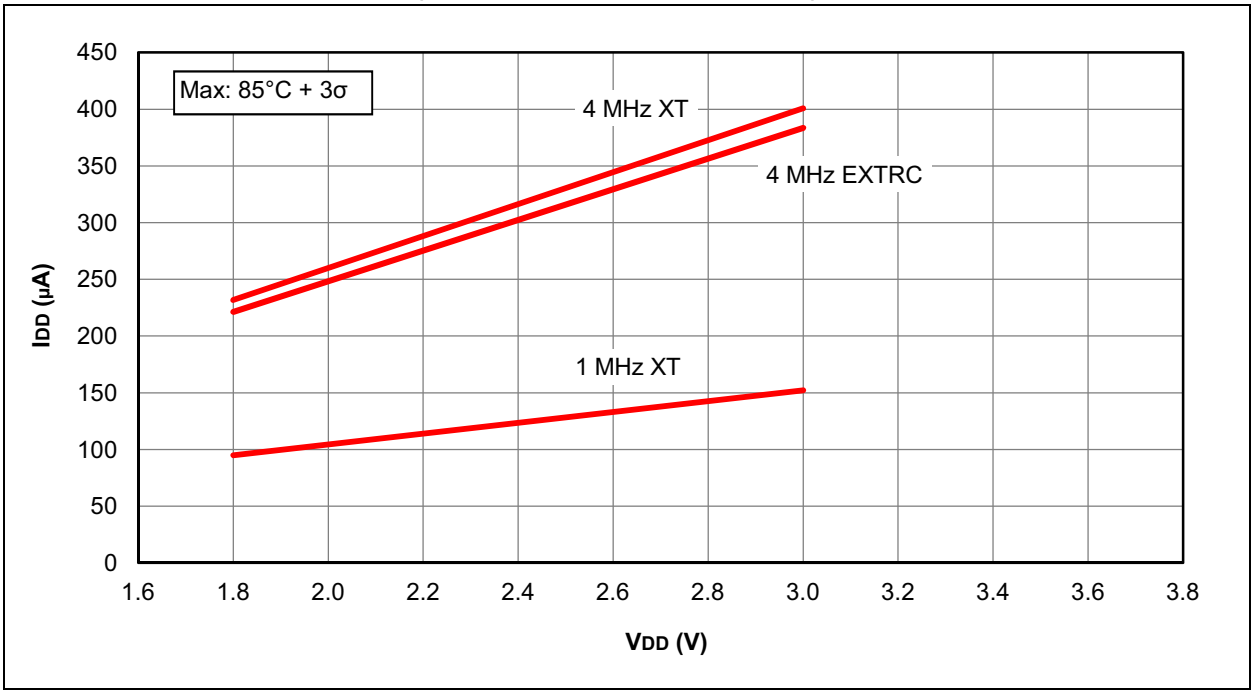

FIGURE 31-5: IDD TYPICAL, XT AND EXTRC OSCILLATOR, PIC16F1824/8 ONLY

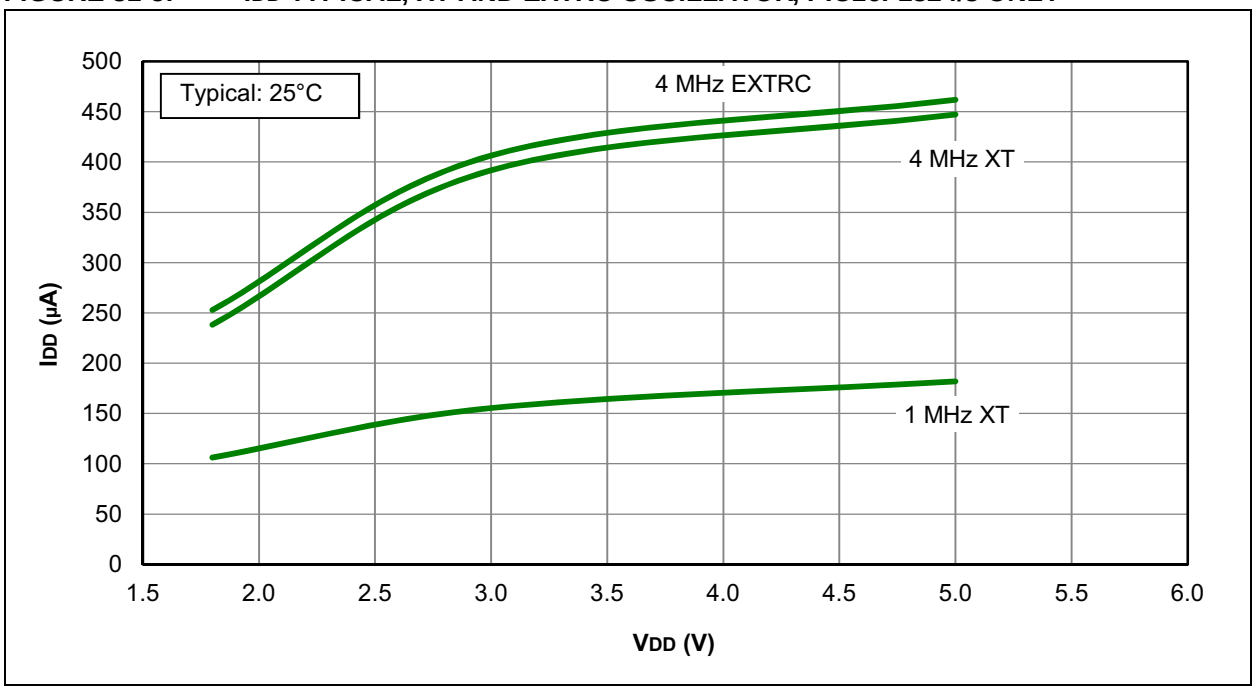

FIGURE 31-6: IDD MAXIMUM, XT AND EXTRC OSCILLATOR, PIC16F1824/8 ONLY

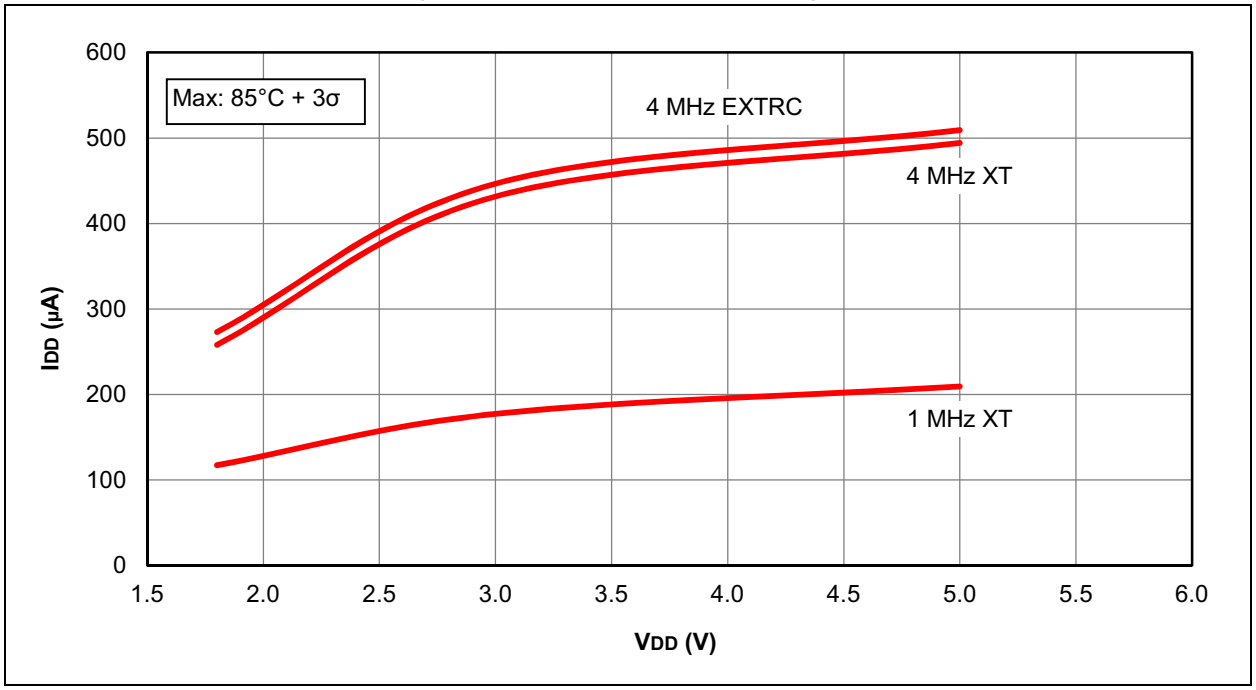

© 2010-2015 Microchip Technology Inc.

FIGURE 31-7: IDD TYPICAL, EC OSCILLATOR, MEDIUM-POWER MODE, PIC16LF1824/8 ONLY

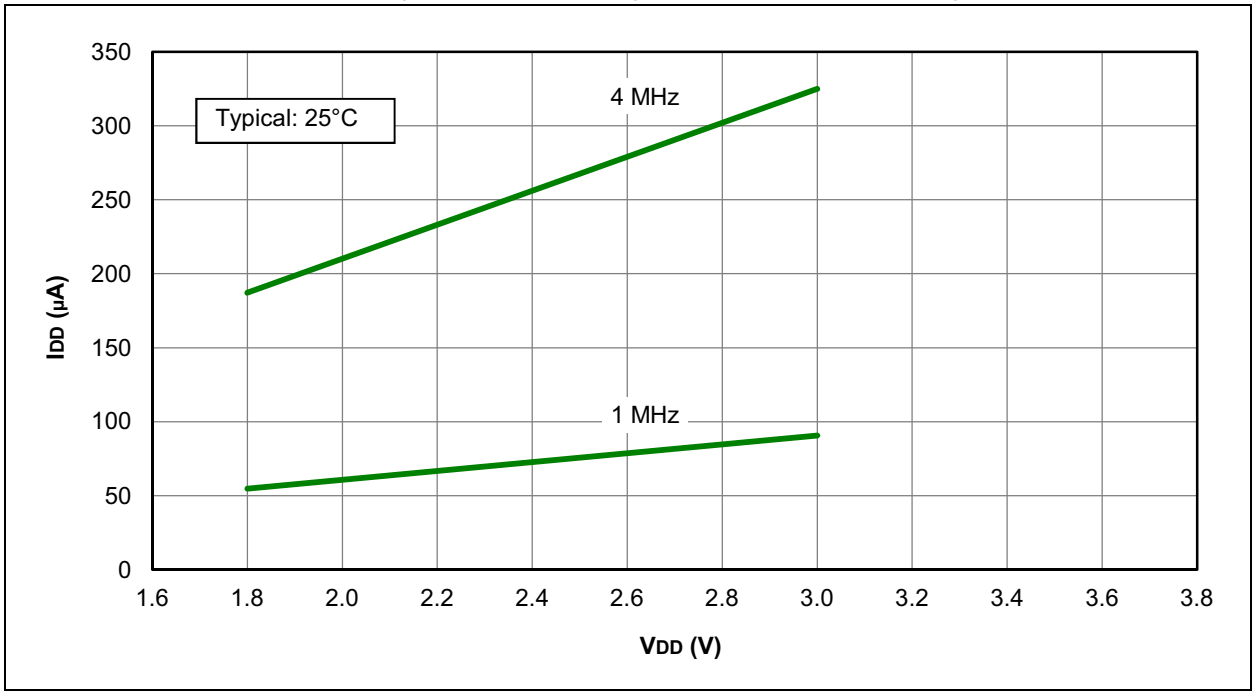

FIGURE 31-8: IDD MAXIMUM, EC OSCILLATOR, MEDIUM-POWER MODE, PIC16LF1824/8 ONLY

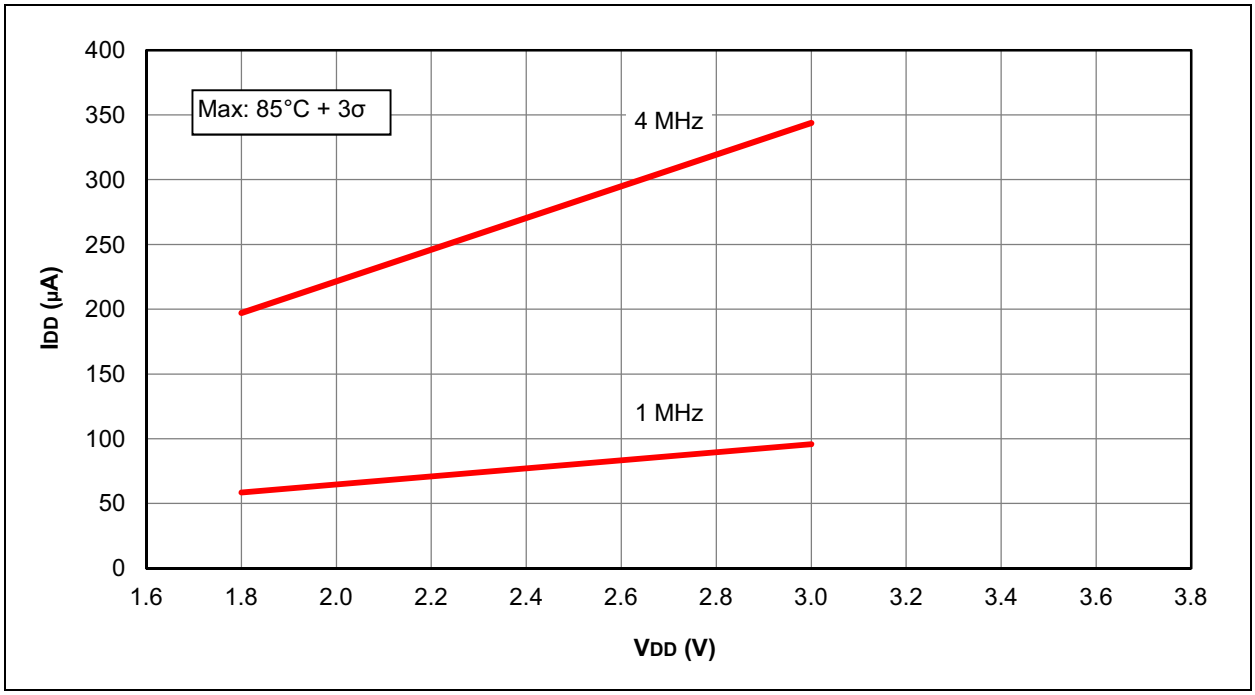

FIGURE 31-9: IDD TYPICAL, EC OSCILLATOR, MEDIUM-POWER MODE, PIC16F1824/8 ONLY

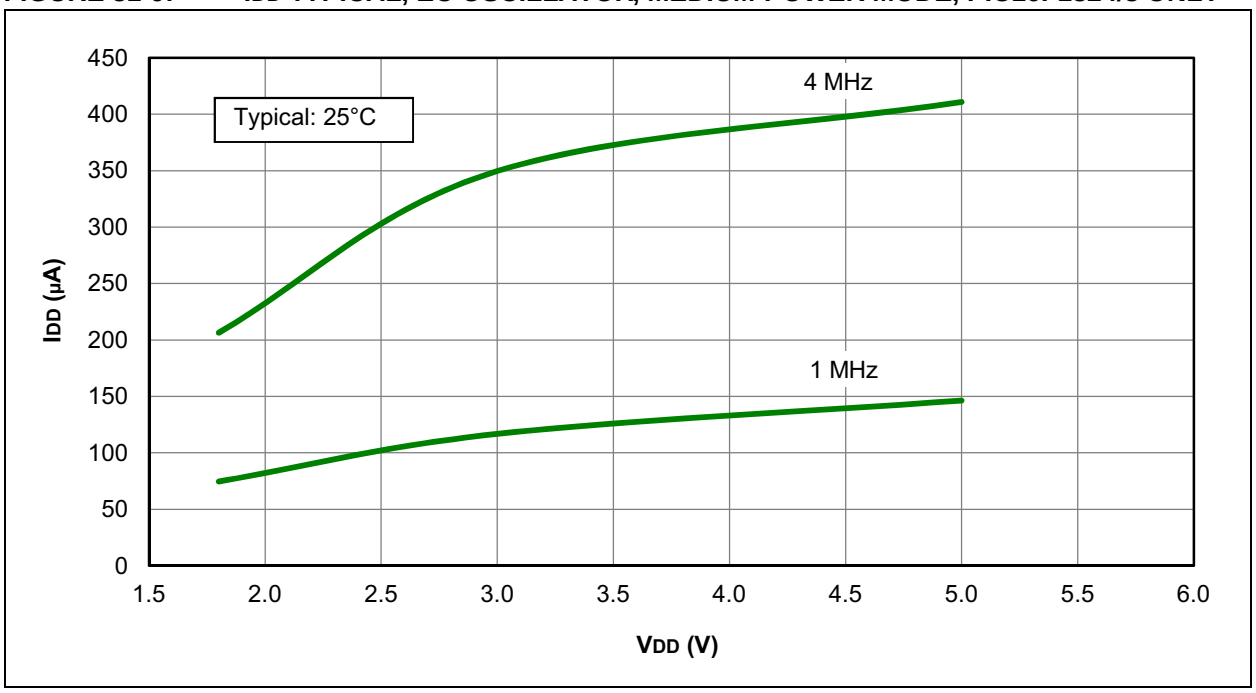

FIGURE 31-10: IDD MAXIMUM, EC OSCILLATOR, MEDIUM-POWER MODE, PIC16F1824/8 ONLY

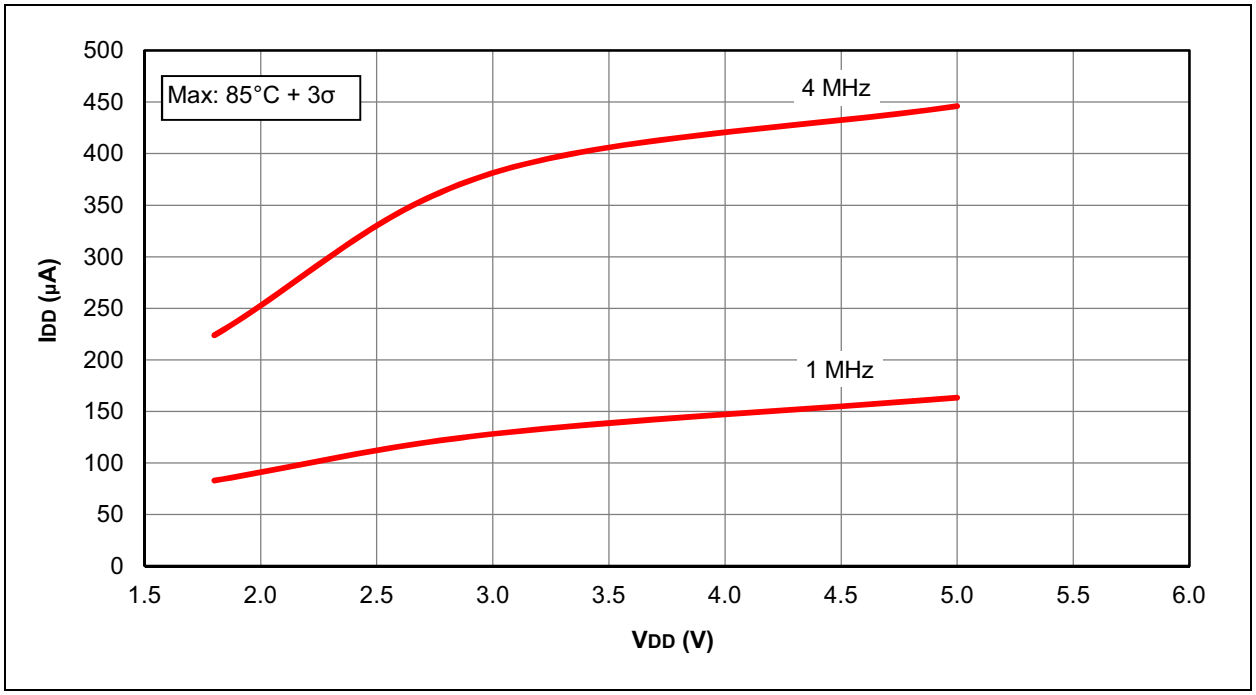

© 2010-2015 Microchip Technology Inc.

FIGURE 31-11: IDD, LFINTOSC MODE (FOSC = 31 kHz), PIC16LF1824/8 ONLY

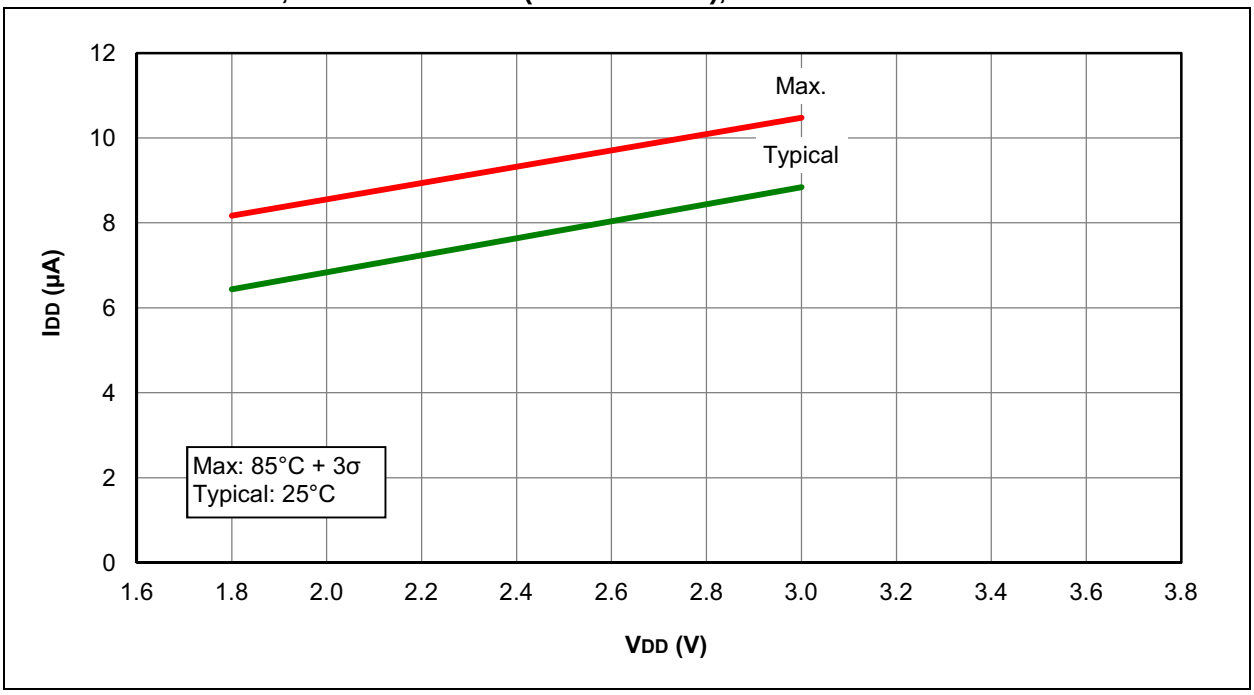

FIGURE 31-12: IDD, LFINTOSC MODE (FOSC = 31 kHz), PIC16F1824/8 ONLY

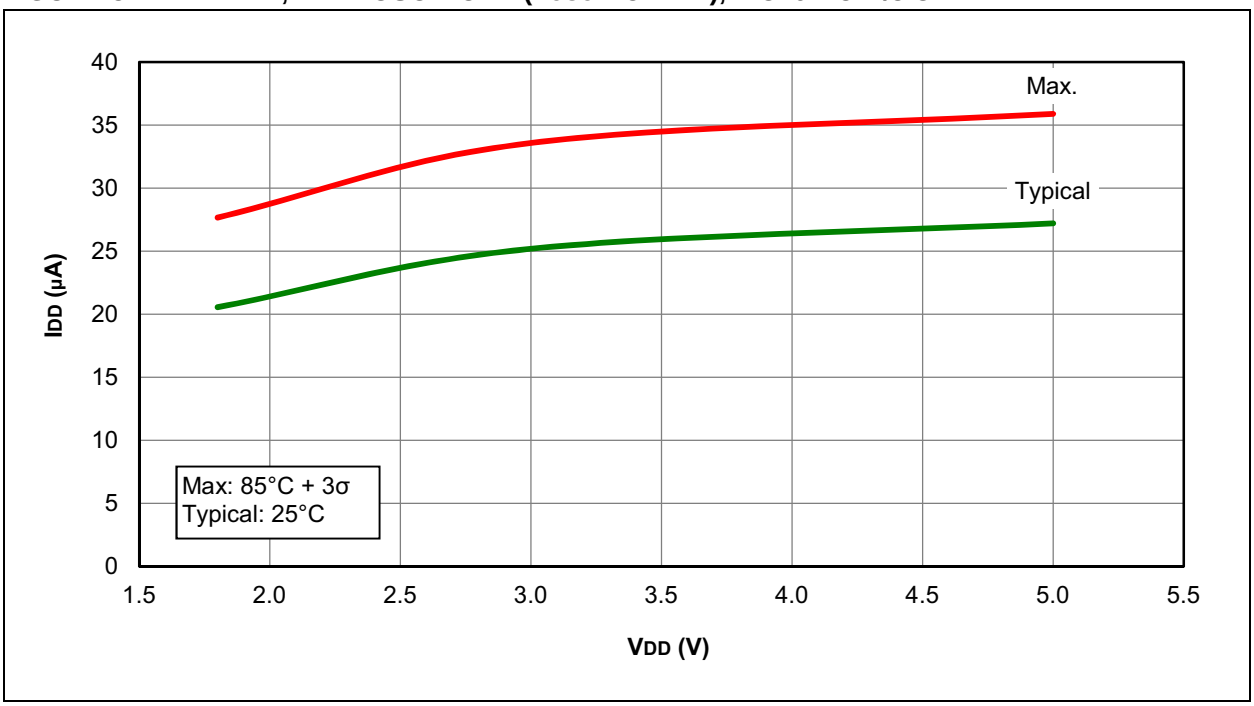

FIGURE 31-13: IDD, MFINTOSC MODE (FOSC = 500 kHz), PIC16LF1824/8 ONLY

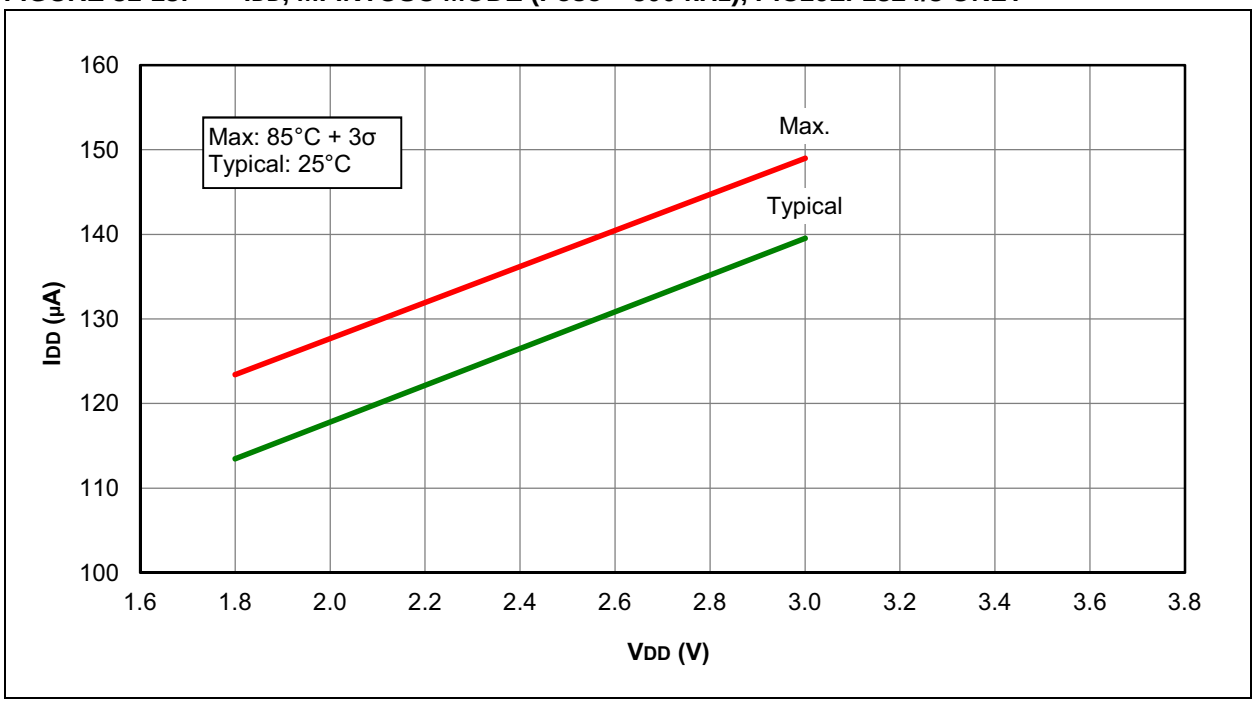

FIGURE 31-14: IDD, MFINTOSC MODE (FOSC = 500 kHz), PIC16F1824/8 ONLY

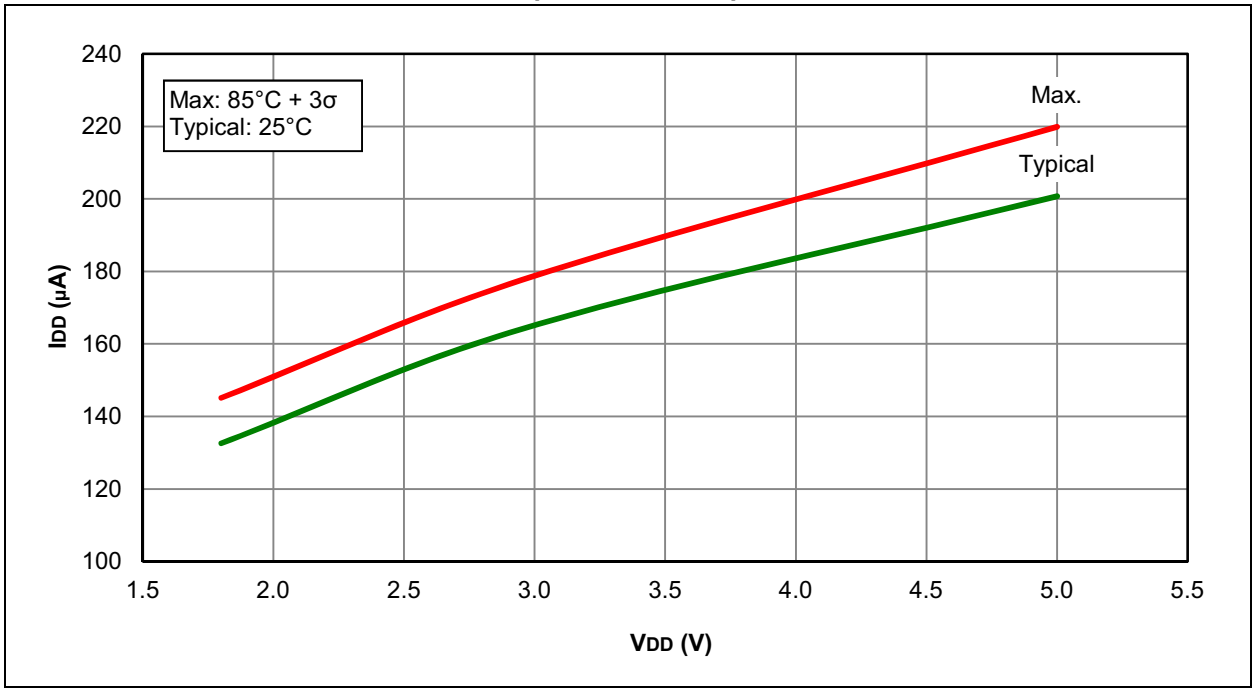

© 2010-2015 Microchip Technology Inc.

FIGURE 31-15: IDD TYPICAL, HFINTOSC MODE, PIC16LF1824/8 ONLY

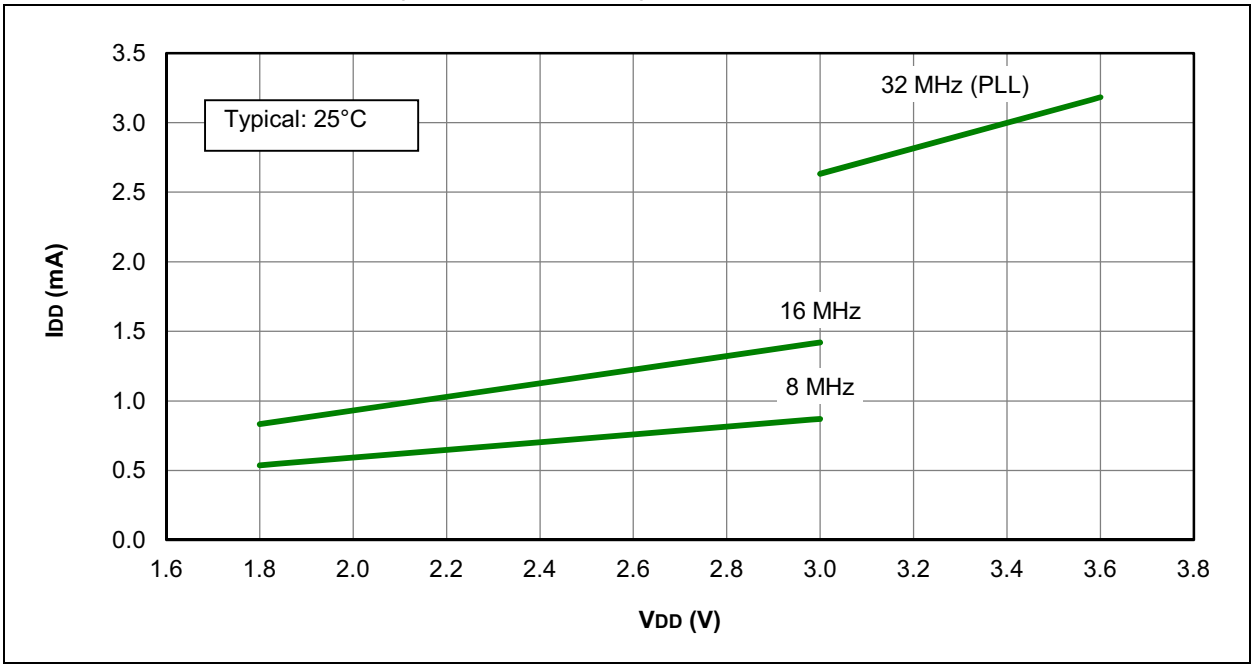

FIGURE 31-16: IDD MAXIMUM, HFINTOSC MODE, PIC16LF1824/8 ONLY

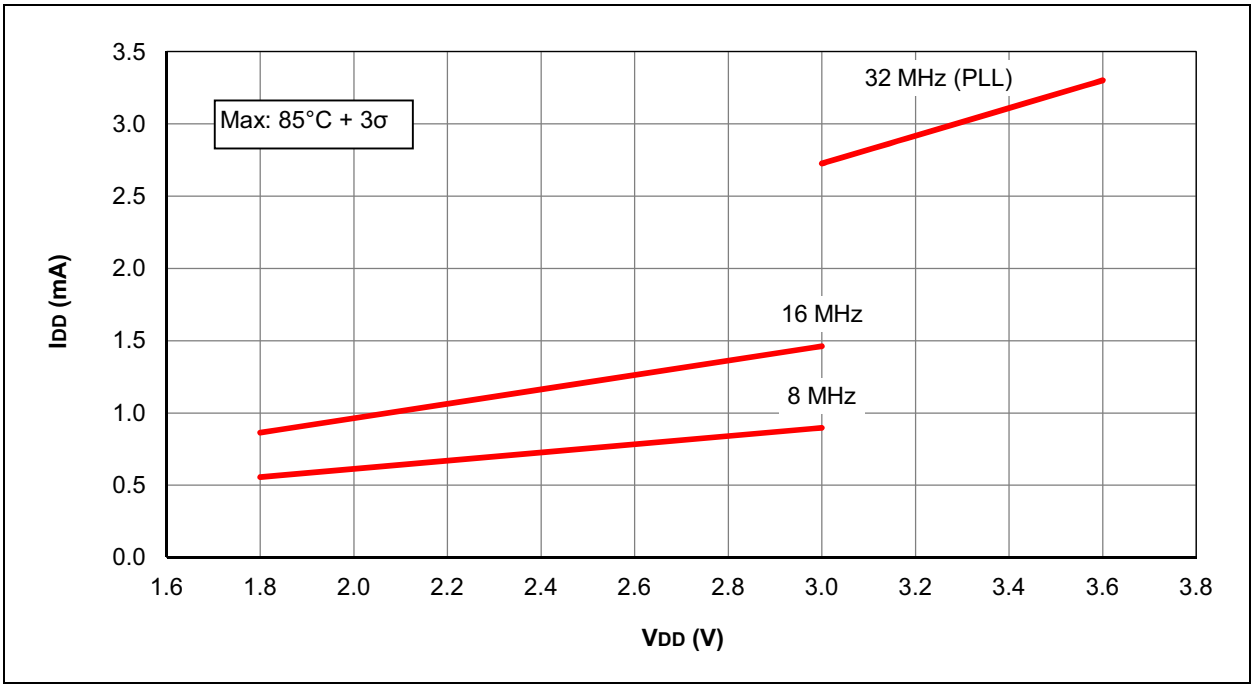

FIGURE 31-17: IDD TYPICAL, HFINTOSC MODE, PIC16F1824/8 ONLY

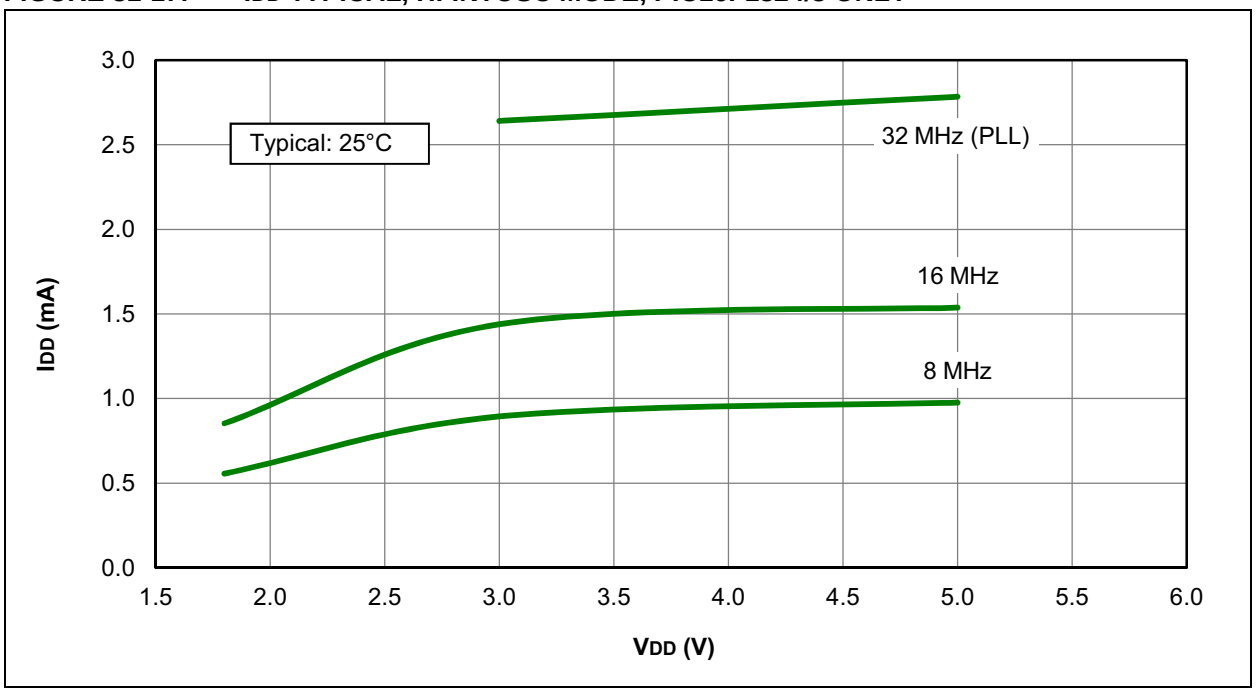

FIGURE 31-18: IDD MAXIMUM, HFINTOSC MODE, PIC16F1824/8 ONLY

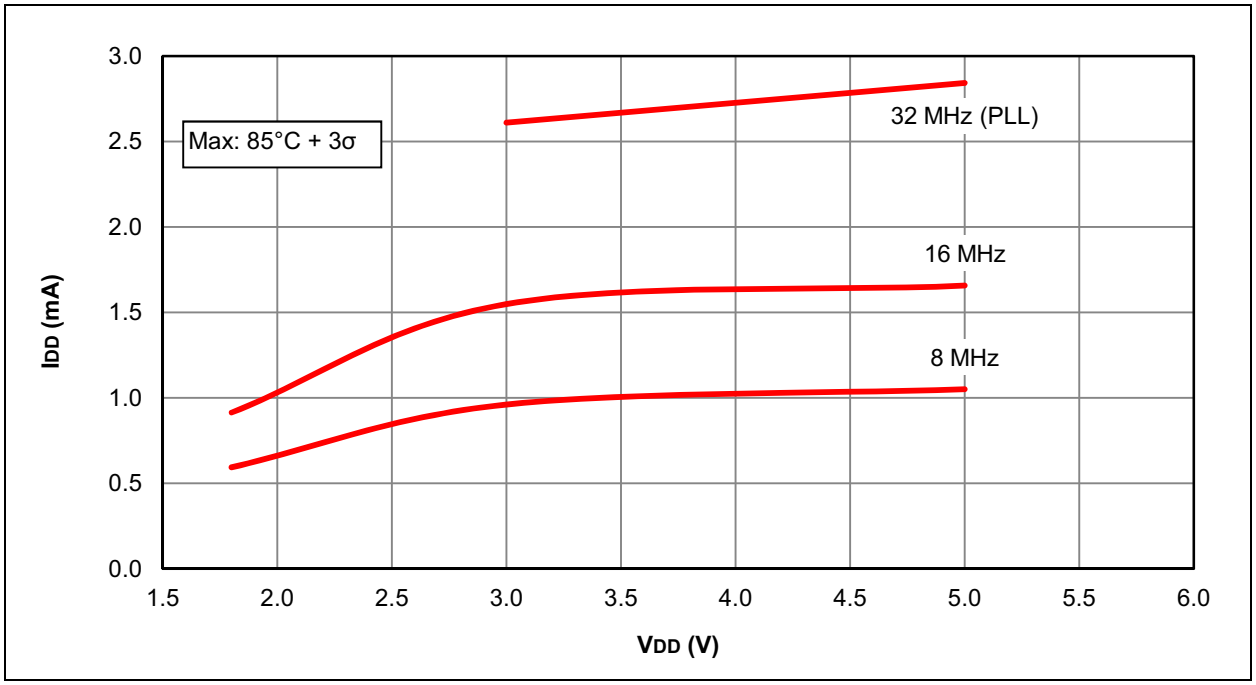

© 2010-2015 Microchip Technology Inc.

FIGURE 31-19: IDD, HS OSCILLATOR, 32 MHz (8 MHz + 4xPLL), PIC16LF1824/8 ONLY

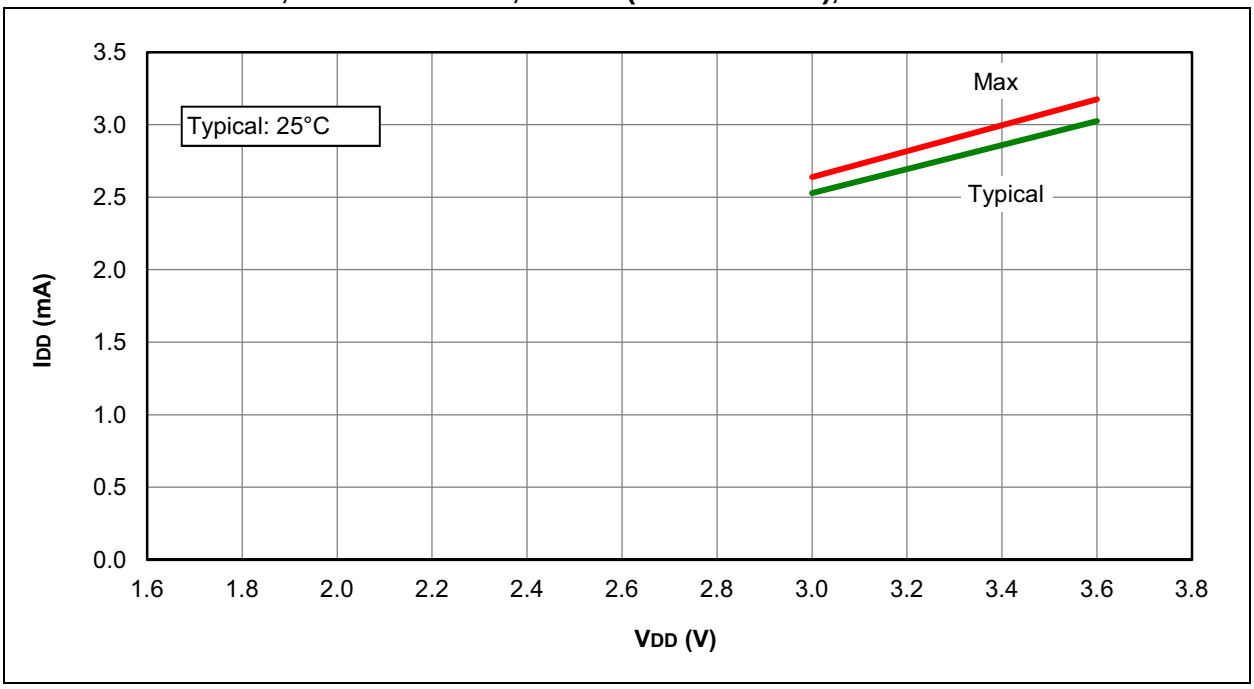

FIGURE 31-20: IDD, HS OSCILLATOR, 32 MHz (8 MHz + 4xPLL), PIC16F1824/8 ONLY

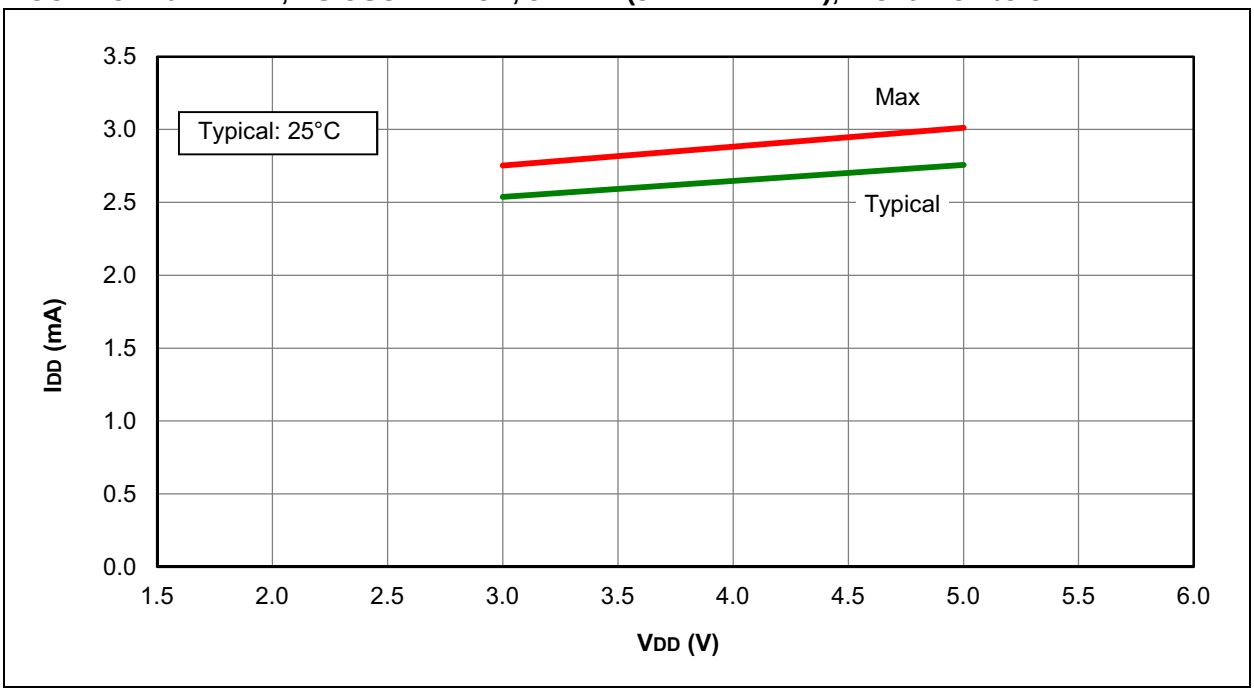

FIGURE 31-21: IPD BASE, LOW-POWER SLEEP MODE, PIC16LF1824/8 ONLY

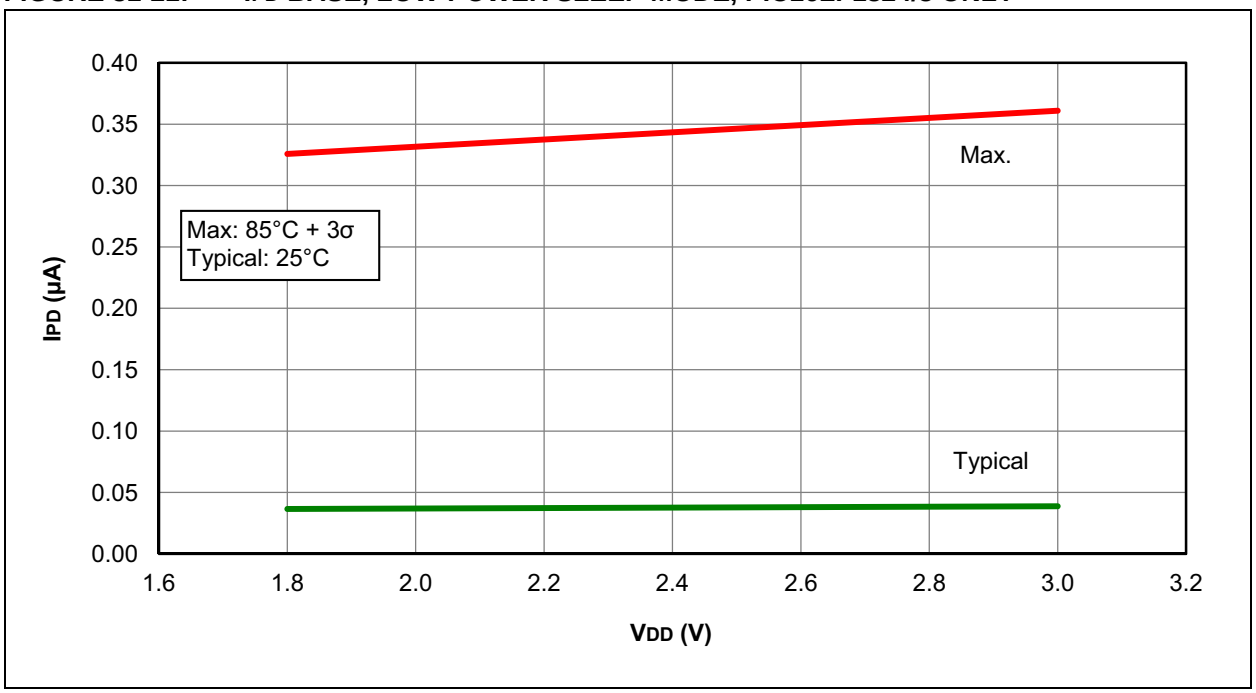

FIGURE 31-22: IPD BASE, LOW-POWER SLEEP MODE, PIC16F1824/8 ONLY

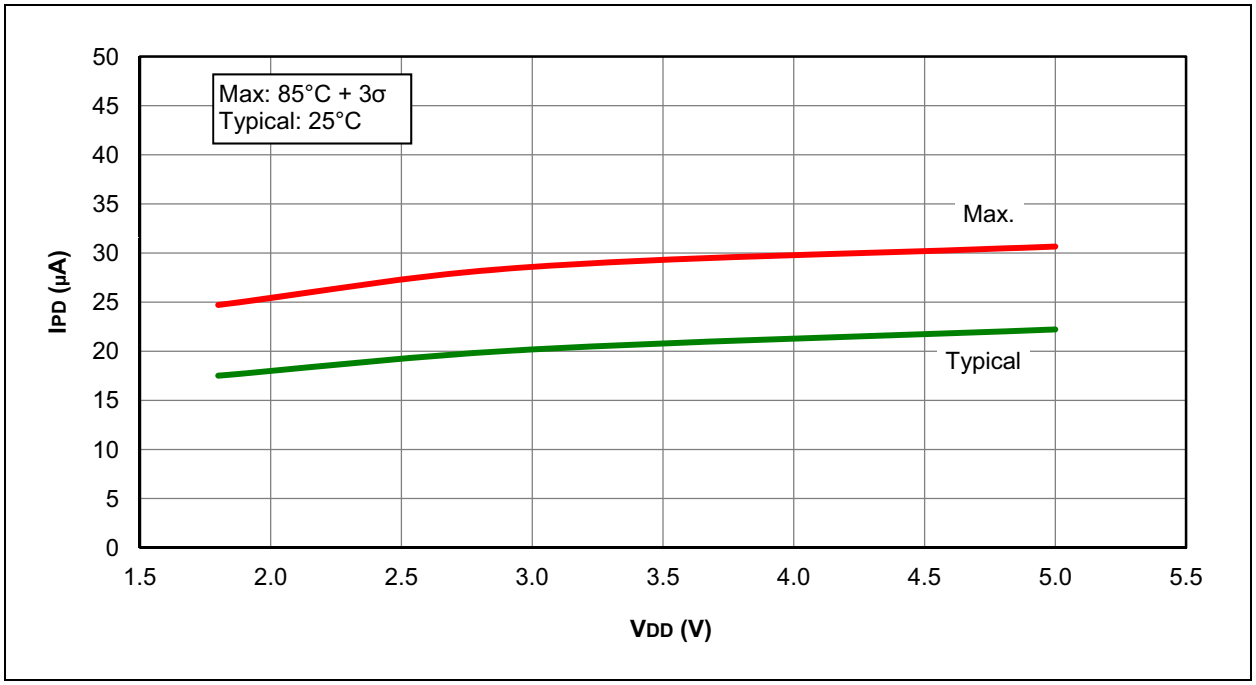

© 2010-2015 Microchip Technology Inc.

FIGURE 31-23: IPD, WATCHDOG TIMER (WDT), PIC16LF1824/8 ONLY

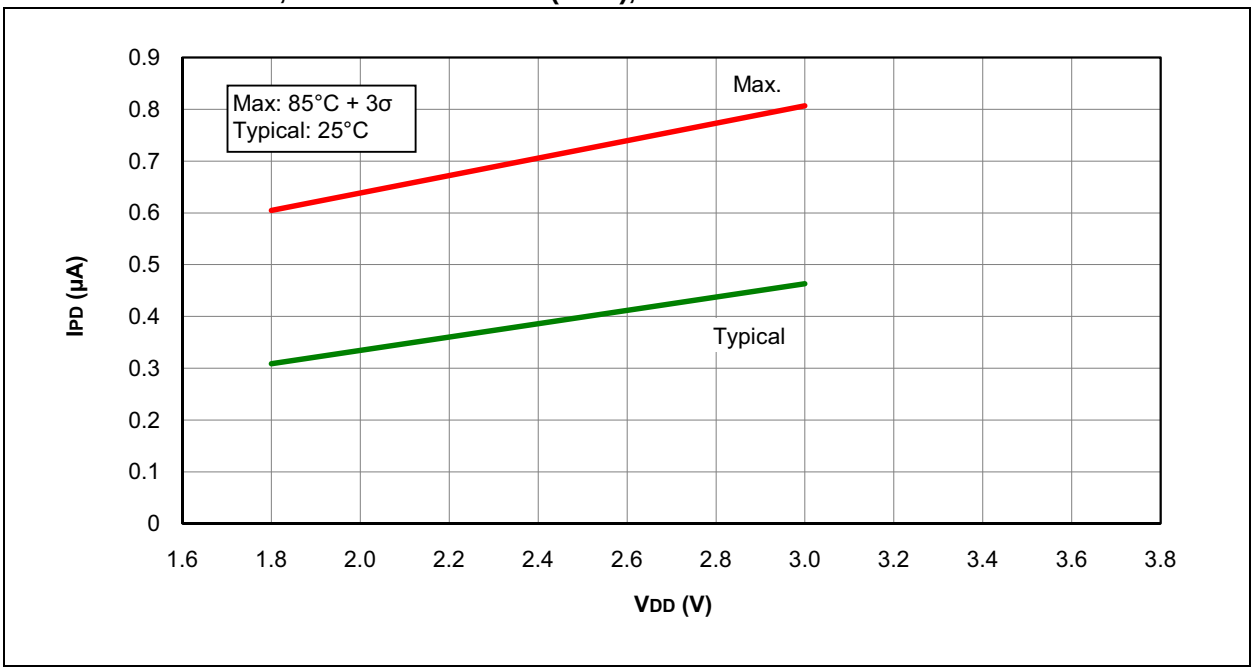

FIGURE 31-24: IPD, WATCHDOG TIMER (WDT), PIC16F1824/8 ONLY

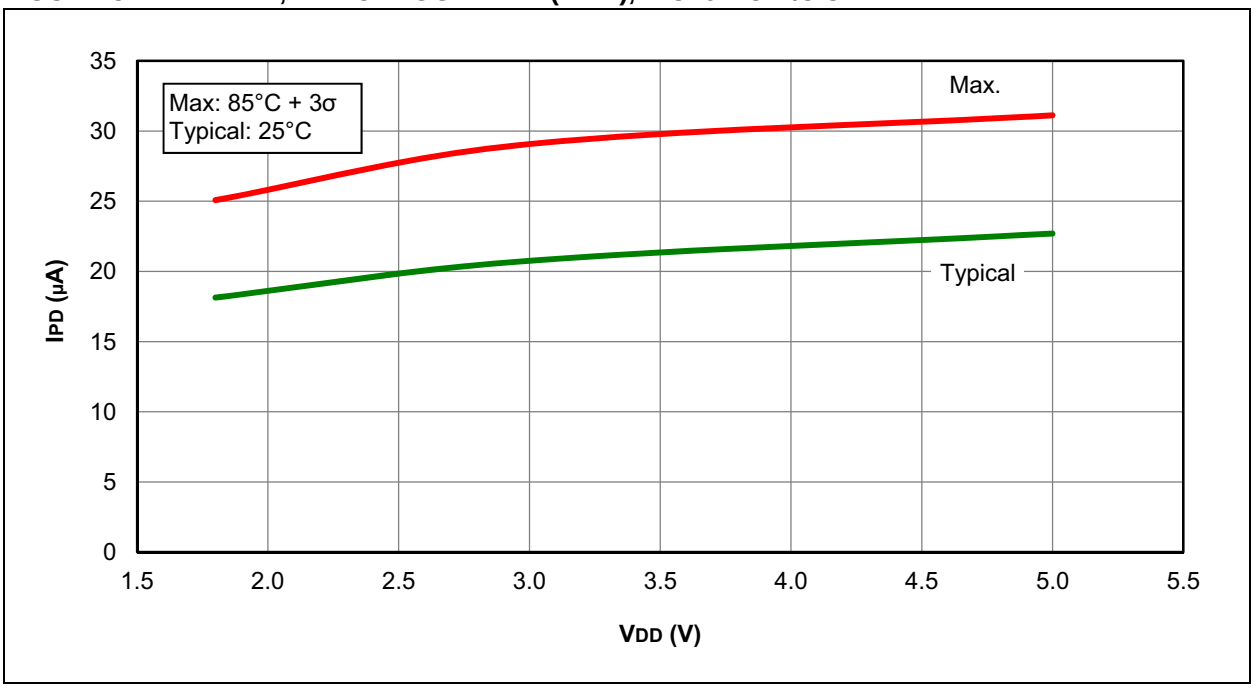

FIGURE 31-25: IPD, FIXED VOLTAGE REFERENCE (FVR), PIC16LF1824/8 ONLY

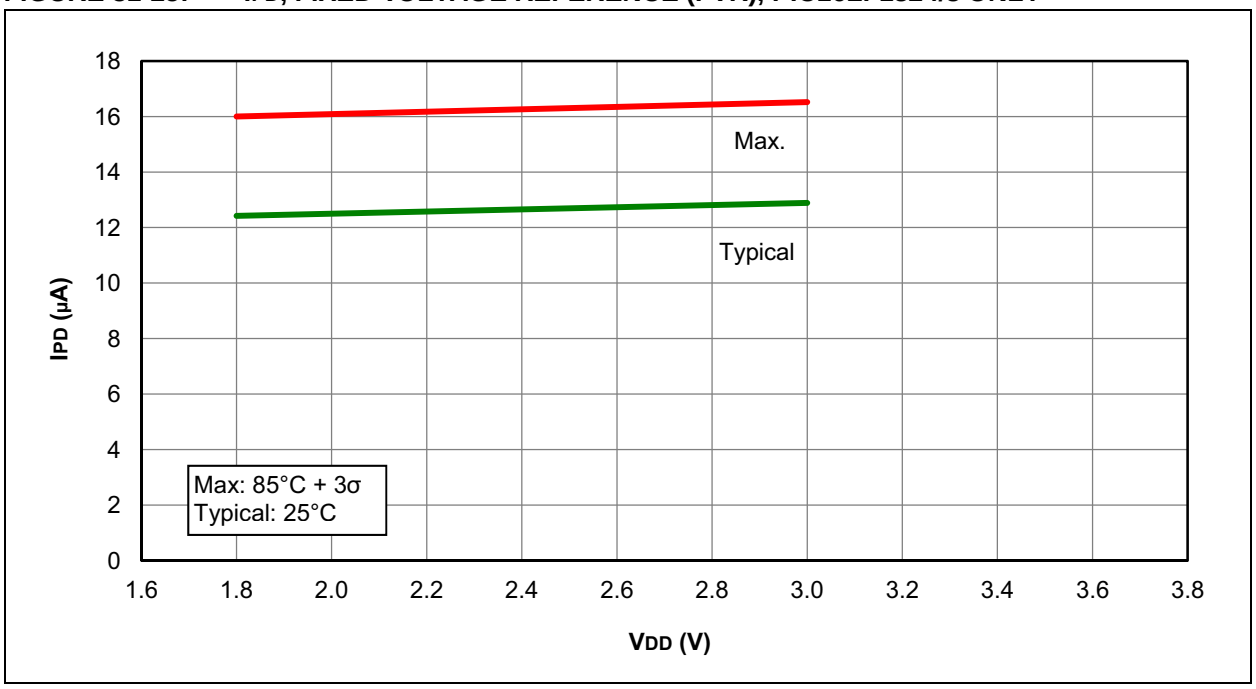

FIGURE 31-26: IPD, FIXED VOLTAGE REFERENCE (FVR), PIC16F1824/8 ONLY

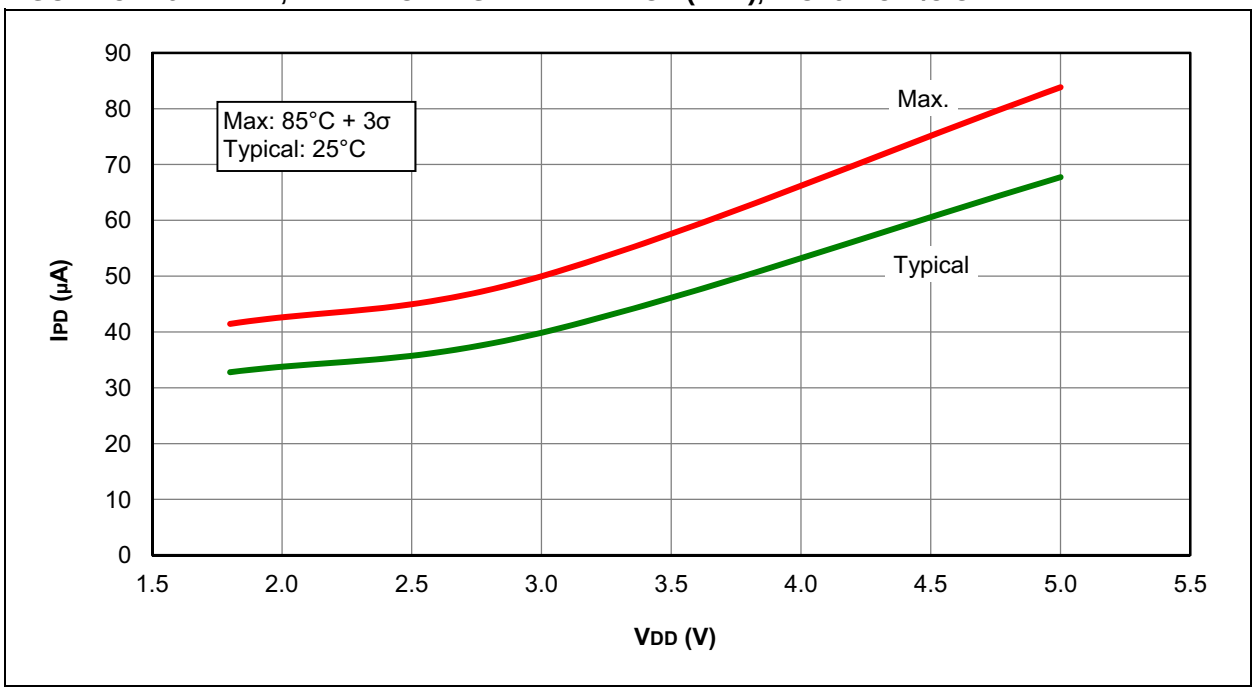

© 2010-2015 Microchip Technology Inc.

FIGURE 31-27: IPD, BROWN-OUT RESET (BOR), PIC16LF1824/8 ONLY

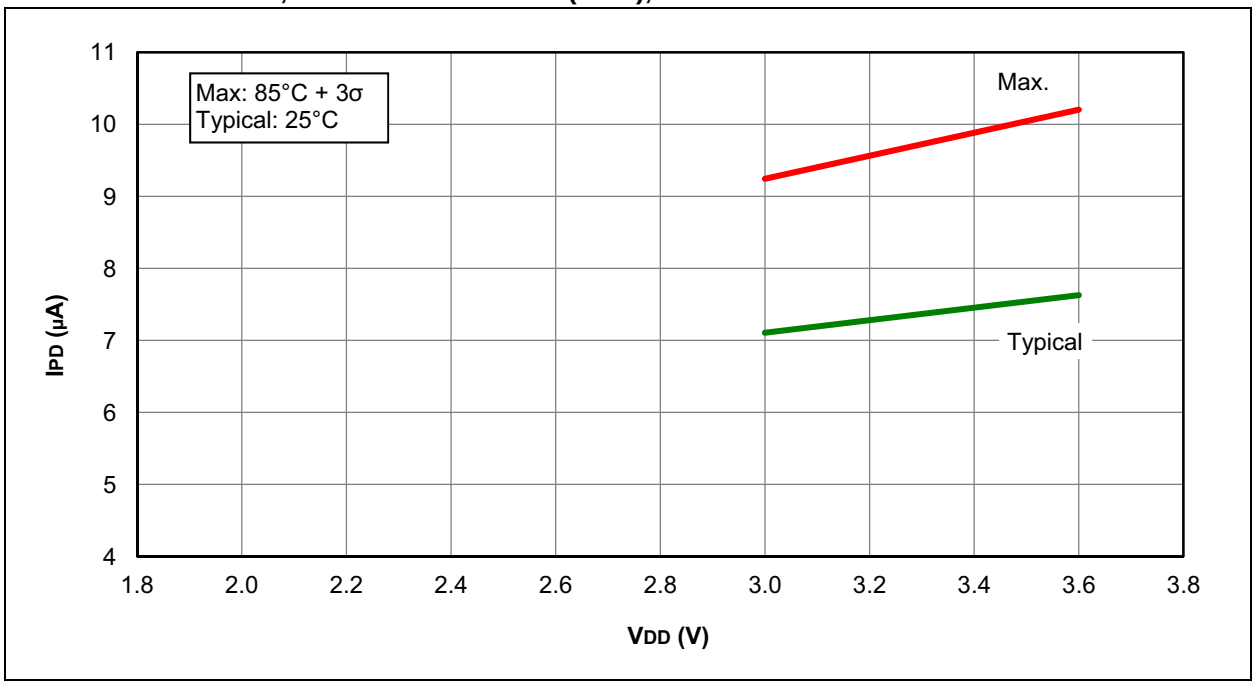

FIGURE 31-28: IPD, BROWN-OUT RESET (BOR), PIC16F1824/8 ONLY

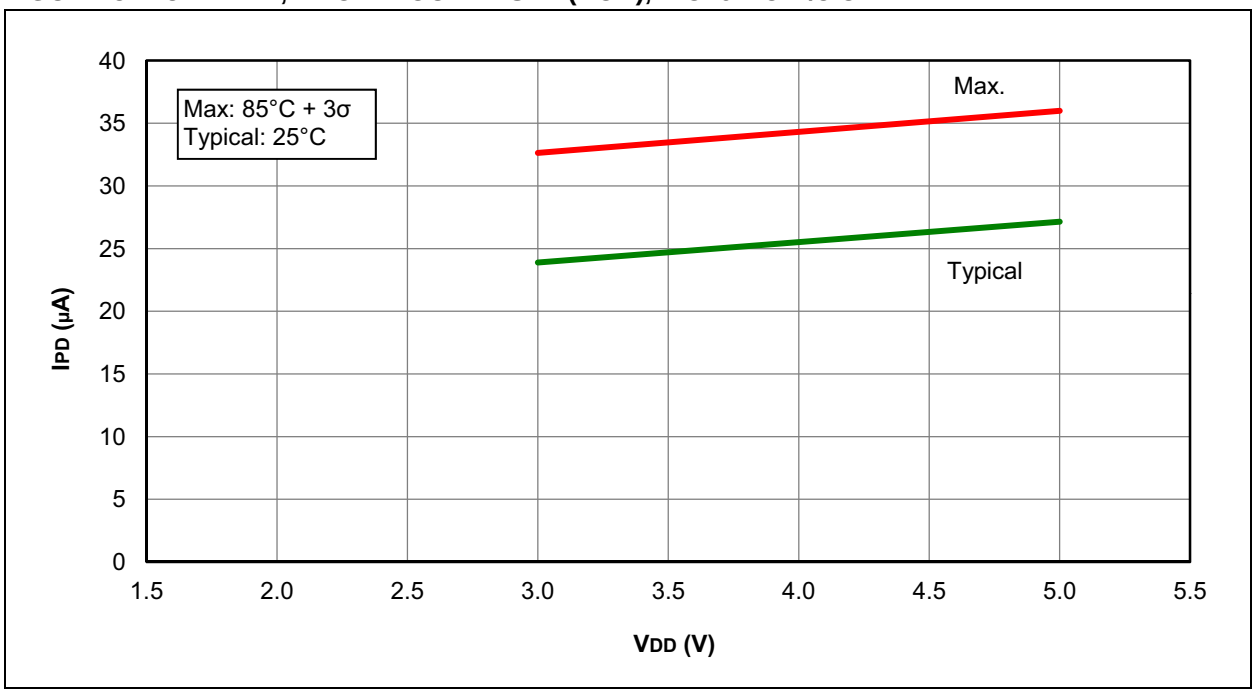

FIGURE 31-29: IPD, TIMER1 OSCILLATOR (FOSC = 32 kHz), PIC16LF1824/8 ONLY

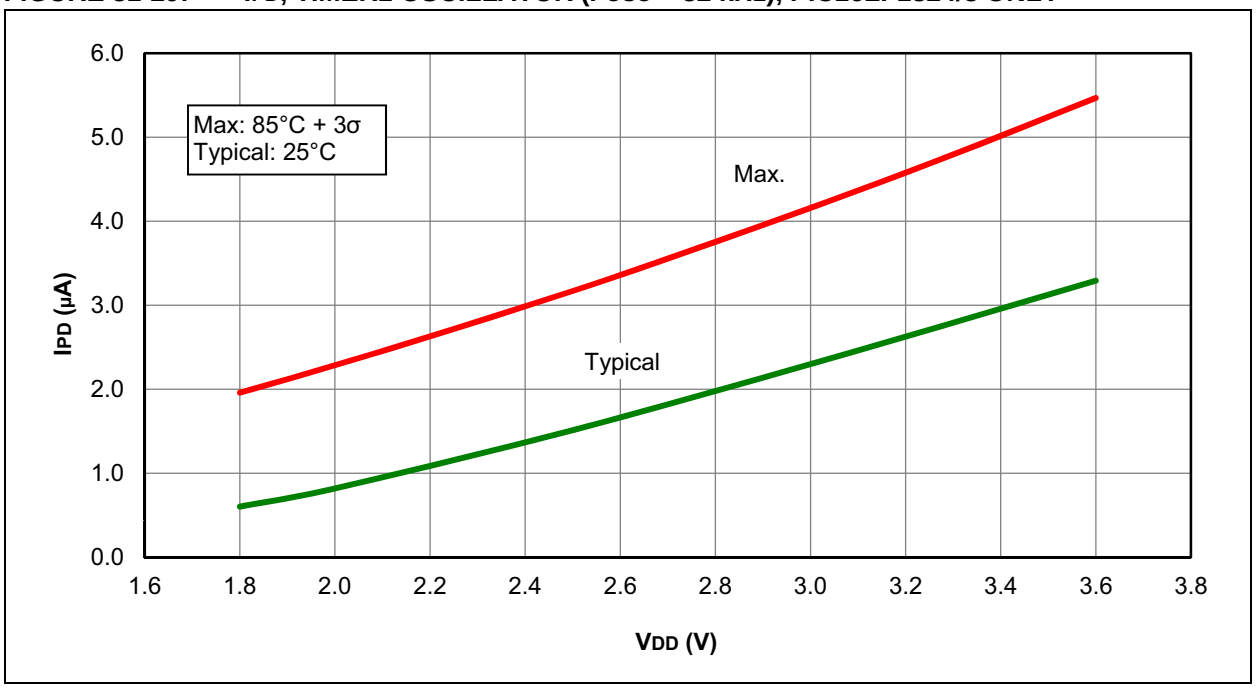

FIGURE 31-30: IPD, TIMER1 OSCILLATOR (FOSC = 32 kHz), PIC16F1824/8 ONLY

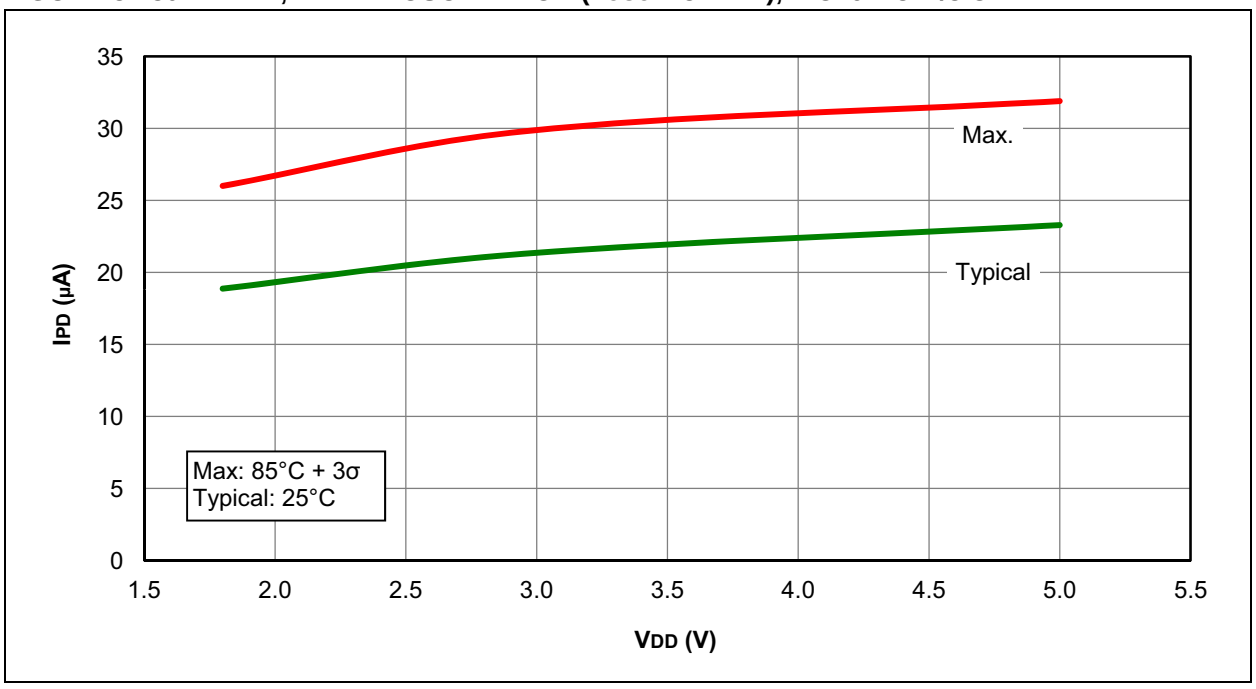

© 2010-2015 Microchip Technology Inc.

FIGURE 31-31: IPD, CAPACITIVE SENSING (CPS) MODULE, LOW-CURRENT RANGE, CPSRM = 0, PIC16LF1824/8 ONLY

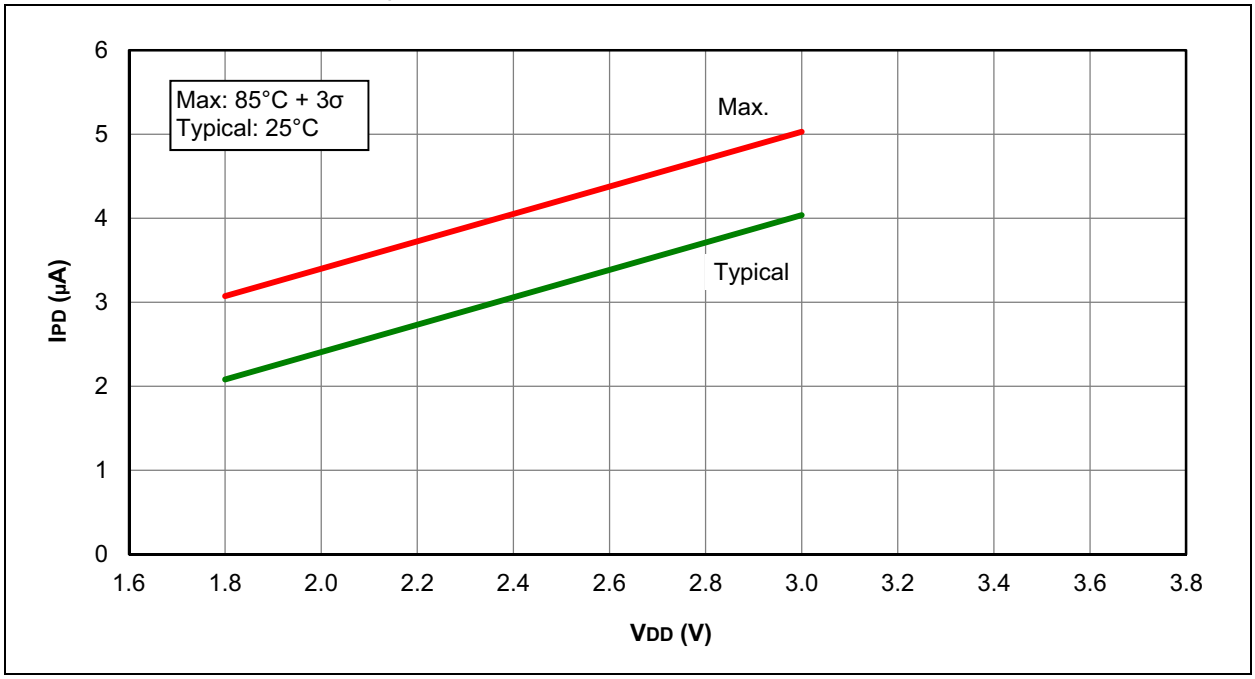

FIGURE 31-32: IPD, CAPACITIVE SENSING (CPS) MODULE, LOW-CURRENT RANGE, CPSRM = 0, PIC16F1824/8 ONLY

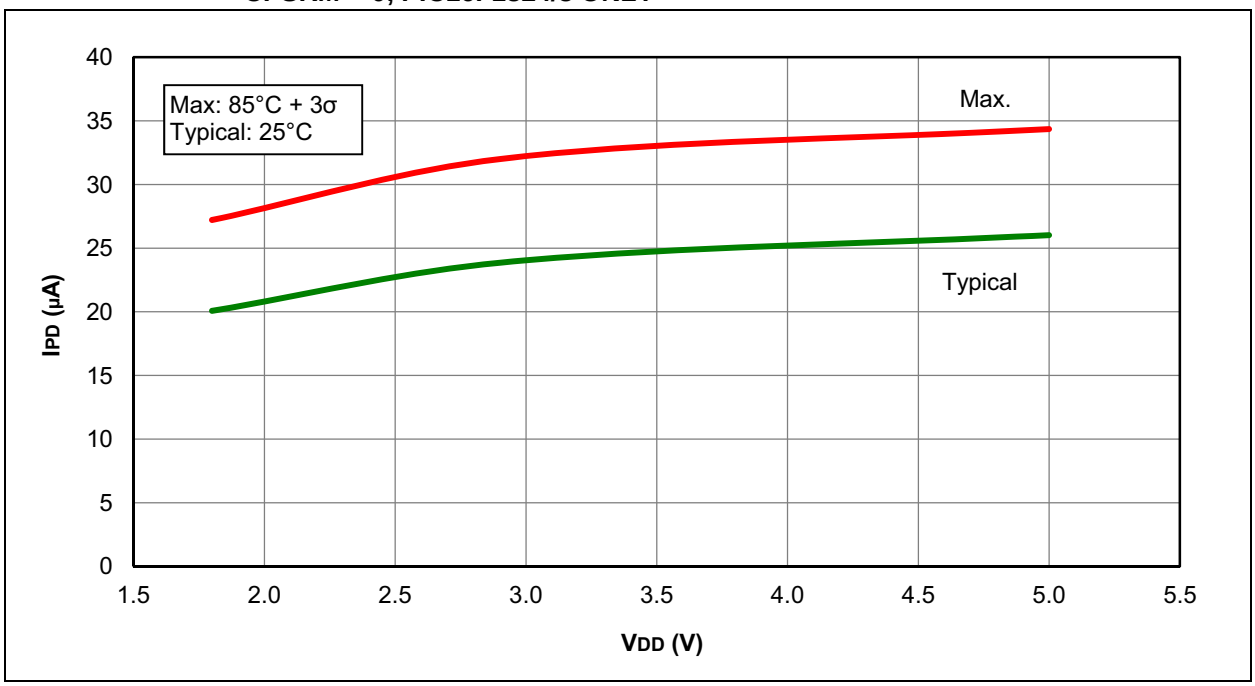

FIGURE 31-33: IPD, CAPACITIVE SENSING (CPS) MODULE, MEDIUM-CURRENT RANGE, CPSRM = 0, PIC16LF1824/8 ONLY

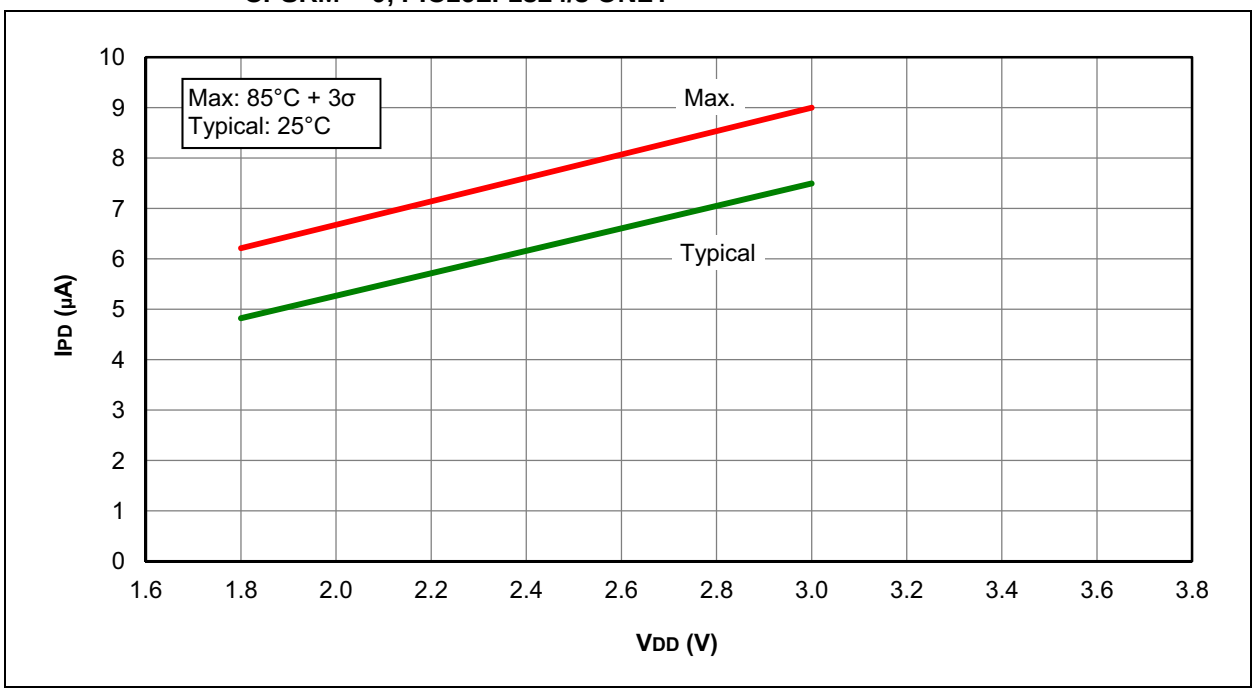

FIGURE 31-34: IPD, CAPACITIVE SENSING (CPS) MODULE, MEDIUM-CURRENT RANGE, CPSRM = 0, PIC16F1824/8 ONLY

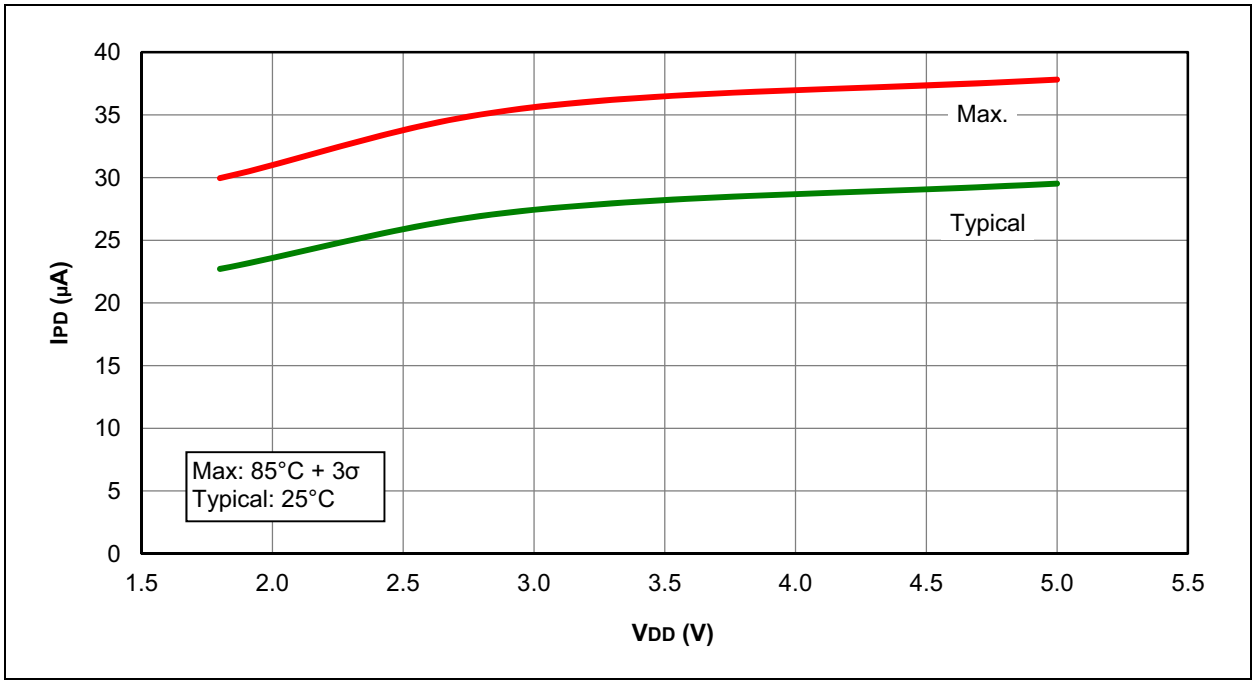

© 2010-2015 Microchip Technology Inc.

FIGURE 31-35: IPD, CAPACITIVE SENSING (CPS) MODULE, HIGH-CURRENT RANGE, CPSRM = 0, PIC16LF1824/8 ONLY

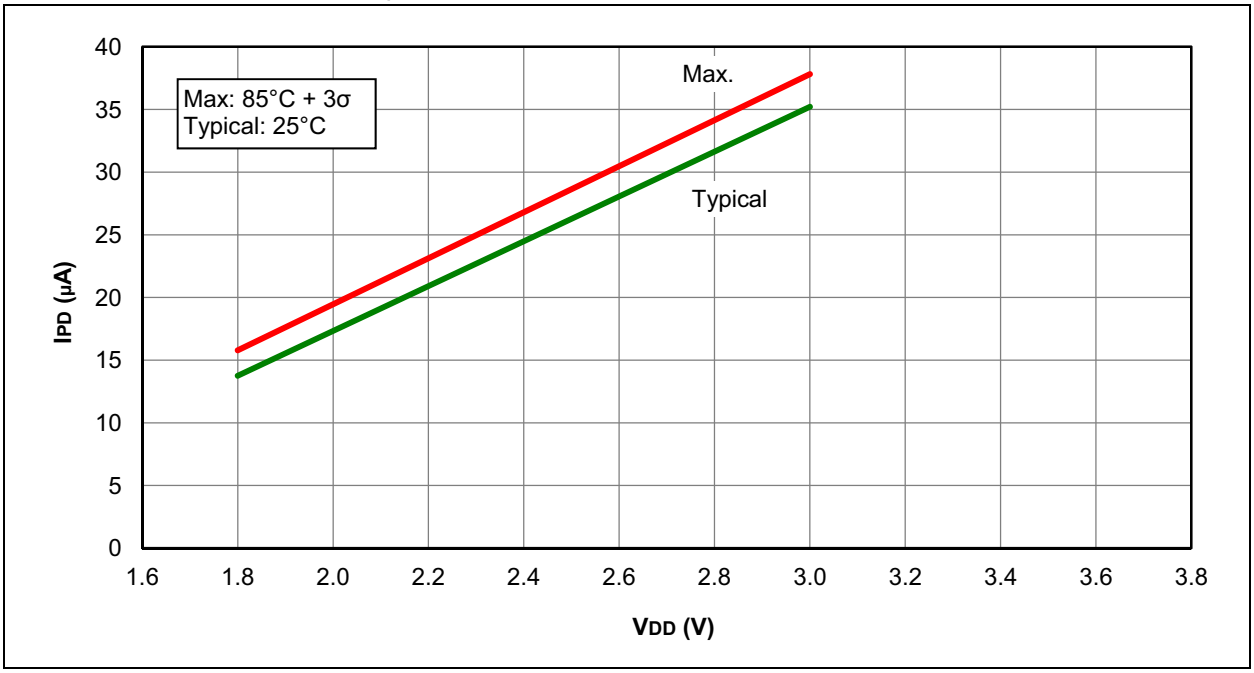

FIGURE 31-36: IPD, CAPACITIVE SENSING (CPS) MODULE, HIGH-CURRENT RANGE, CPSRM = 0, PIC16F1824/8 ONLY

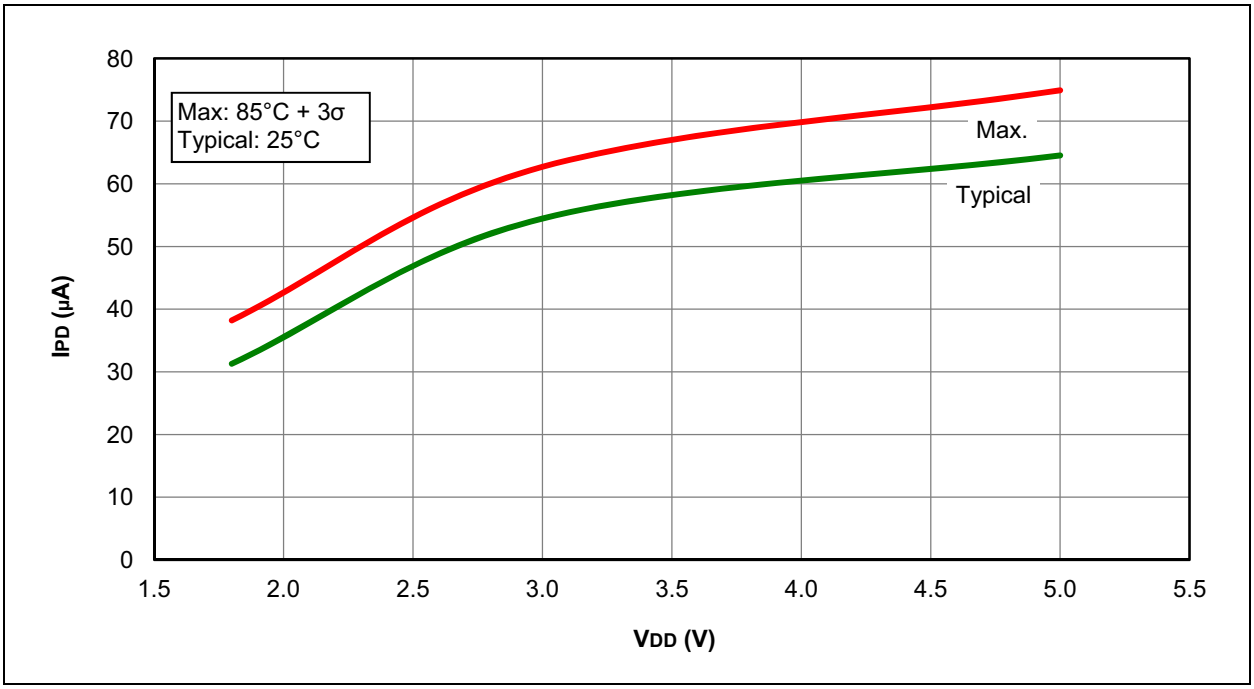

FIGURE 31-37: IPD, COMPARATOR, LOW-POWER MODE (CxSP = 0), PIC16LF1824/8 ONLY

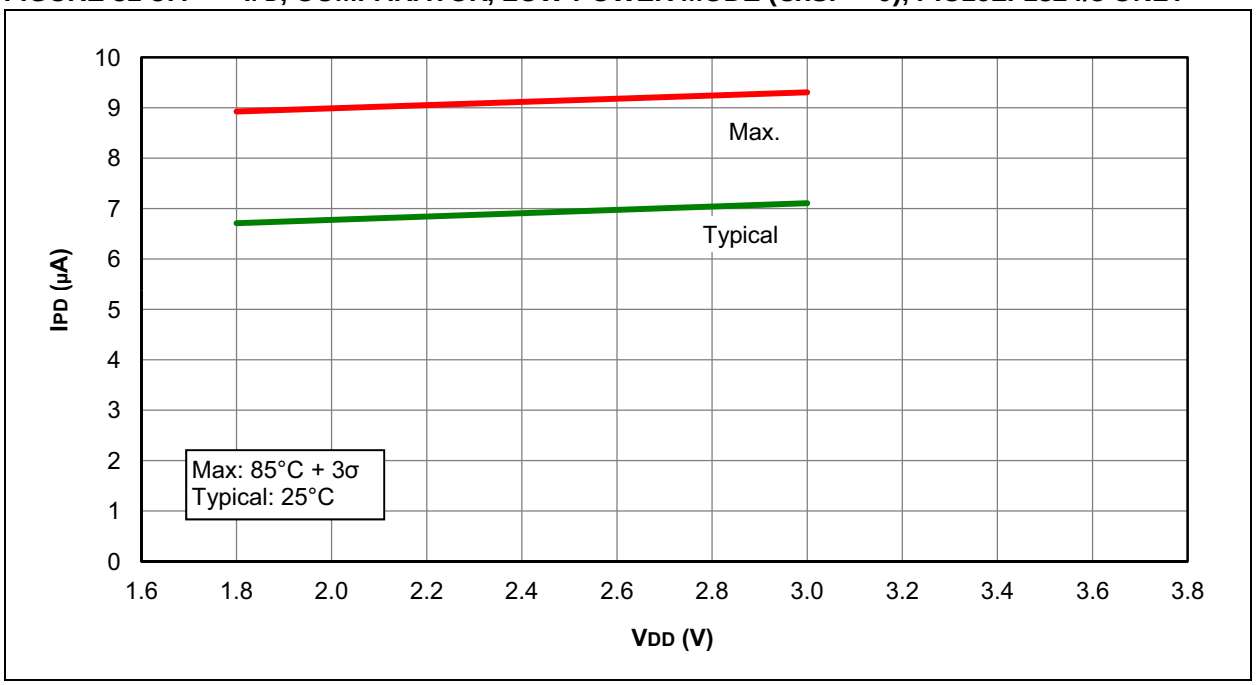

FIGURE 31-38: IPD, COMPARATOR, LOW-POWER MODE (CxSP = 0), PIC16F1824/8 ONLY

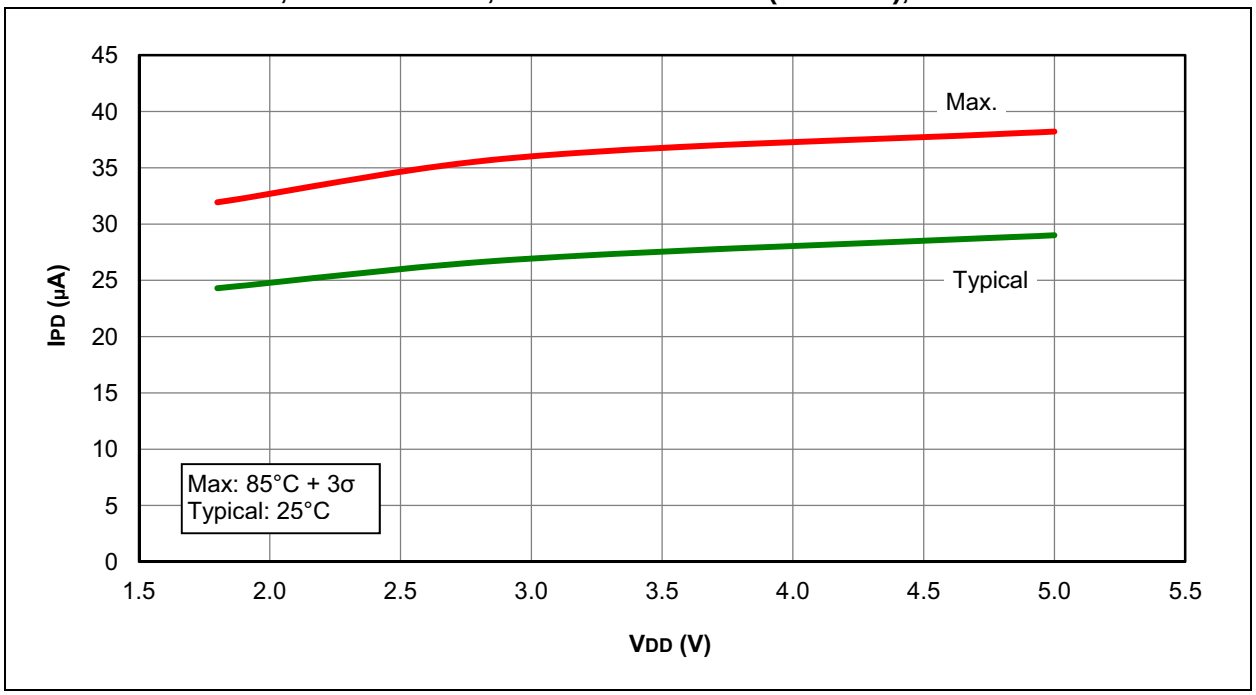

© 2010-2015 Microchip Technology Inc.

FIGURE 31-39: IPD, COMPARATOR, NORMAL-POWER MODE (CxSP = 1), PIC16LF1824/8 ONLY

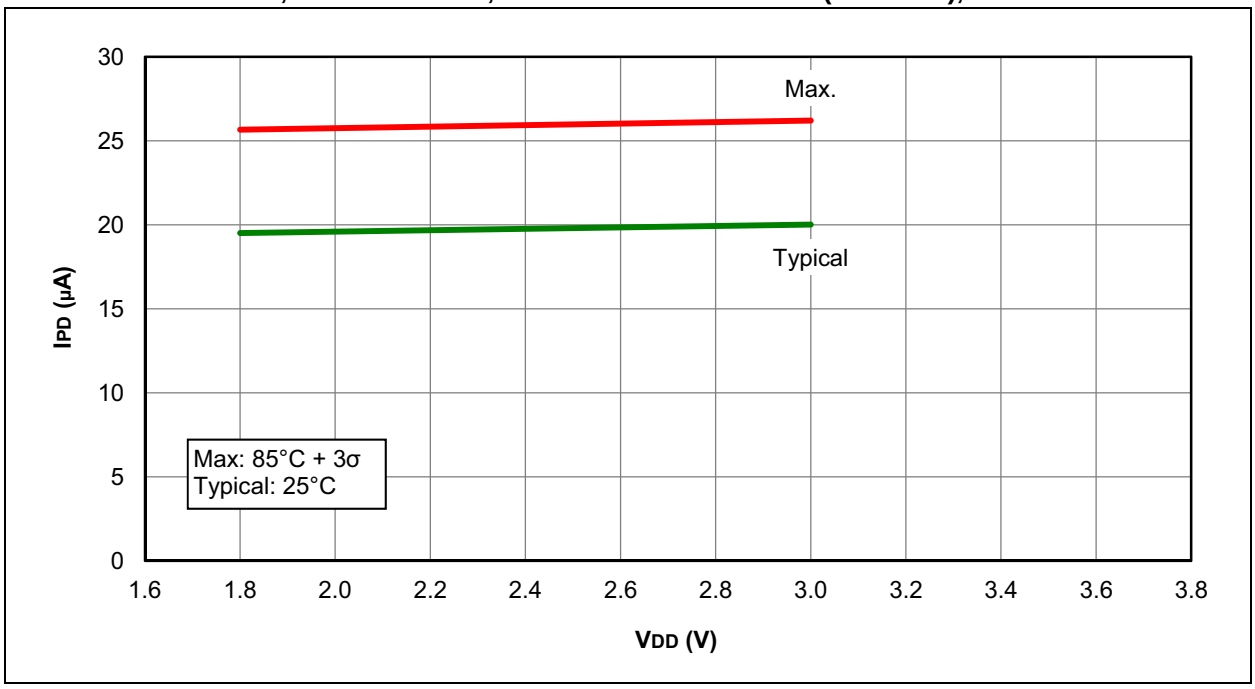

FIGURE 31-40: IPD, COMPARATOR, NORMAL-POWER MODE (CxSP = 1), PIC16F1824/8 ONLY

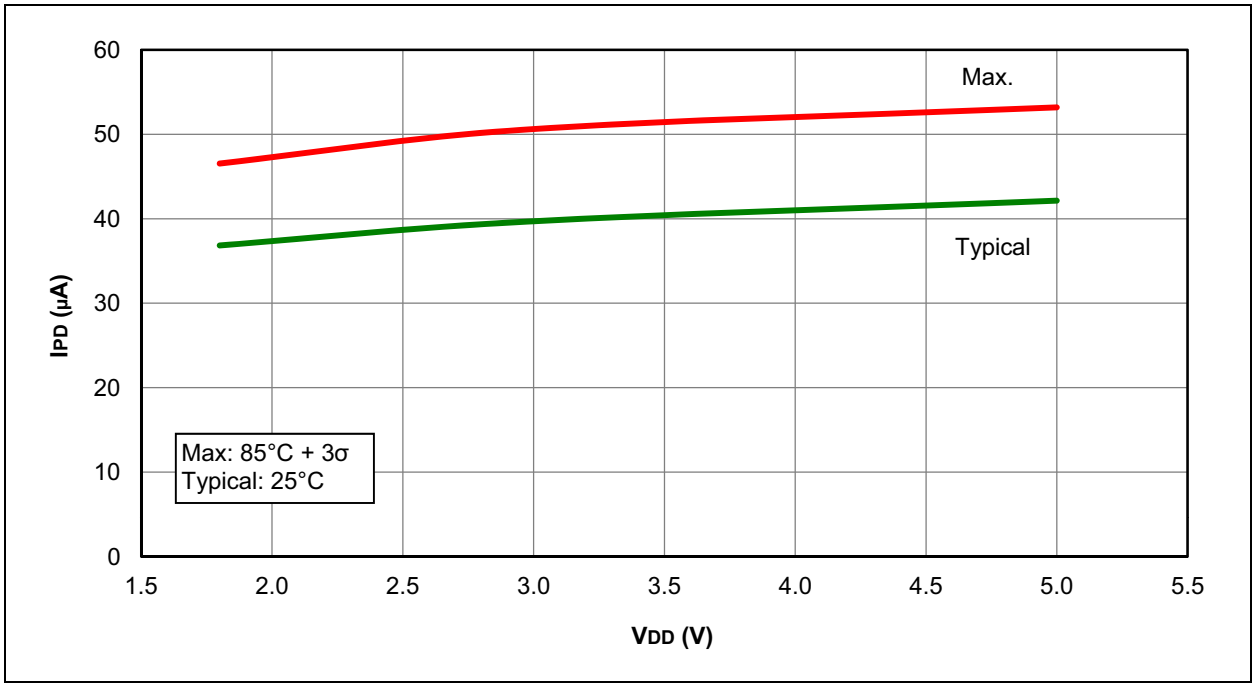

FIGURE 31-41: V_{OH} vs. I_{OH} OVER TEMPERATURE (V_{DD} = 5.0V), PIC16F1824/8 ONLY

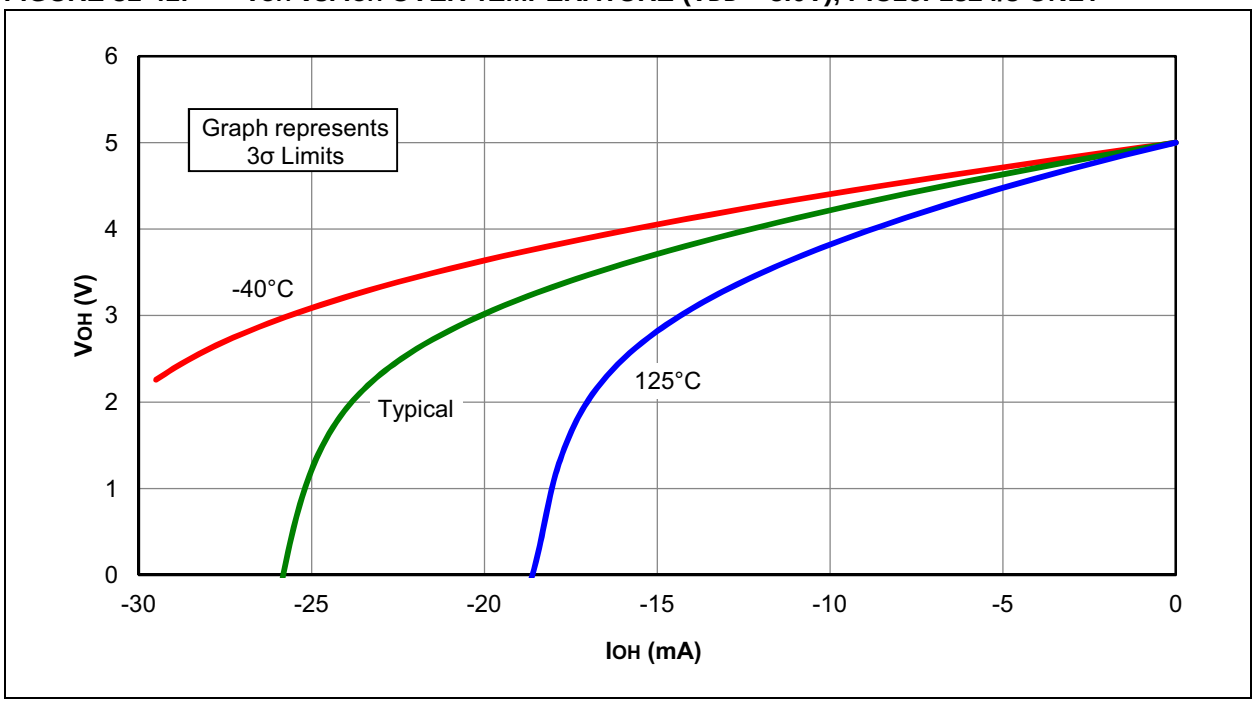

FIGURE 31-42: V_{OL} vs. I_{OL} OVER TEMPERATURE (V_{DD} = 5.0V), PIC16F1824/8 ONLY

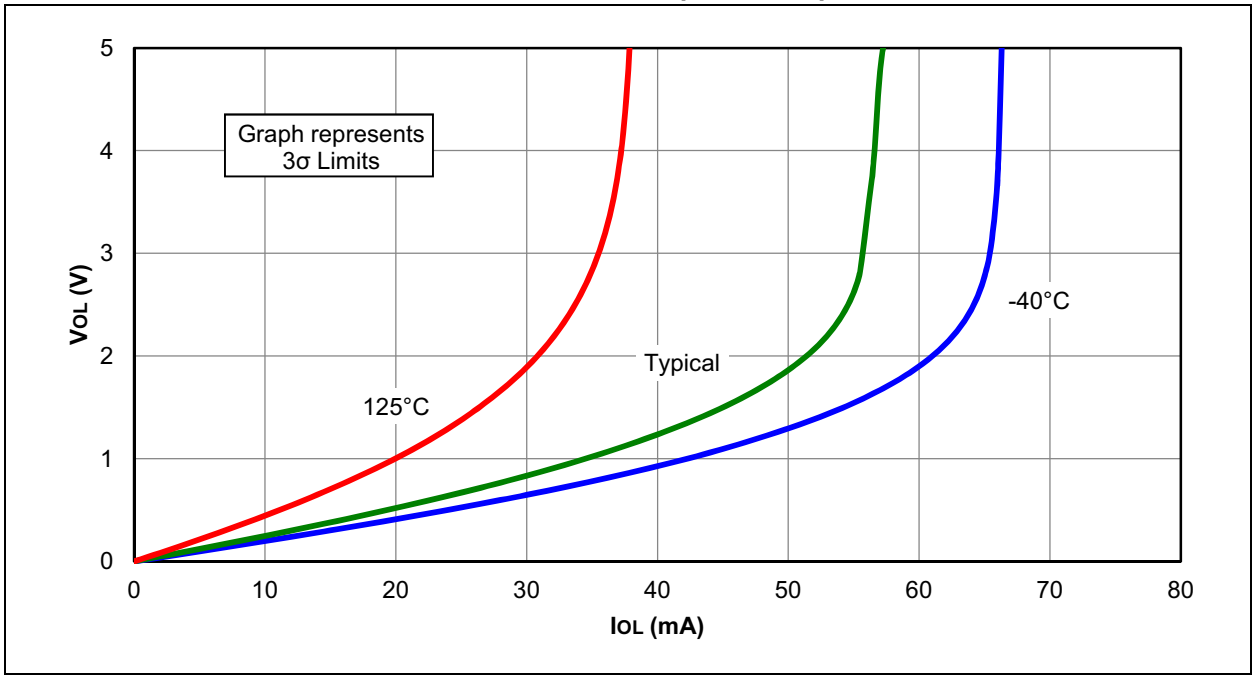

© 2010-2015 Microchip Technology Inc.

FIGURE 31-43: VOH vs. IOH OVER TEMPERATURE (VDD = 3.0V)

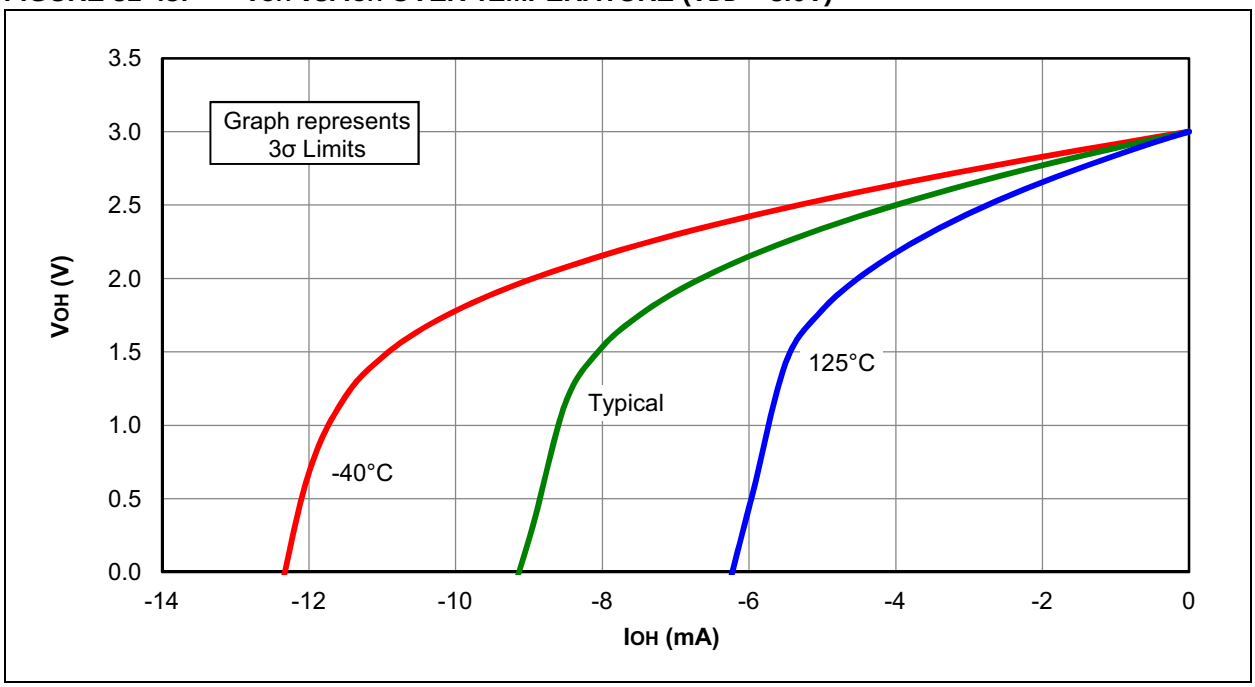

FIGURE 31-44: VOL vs. IOL OVER TEMPERATURE (VDD = 3.0V)

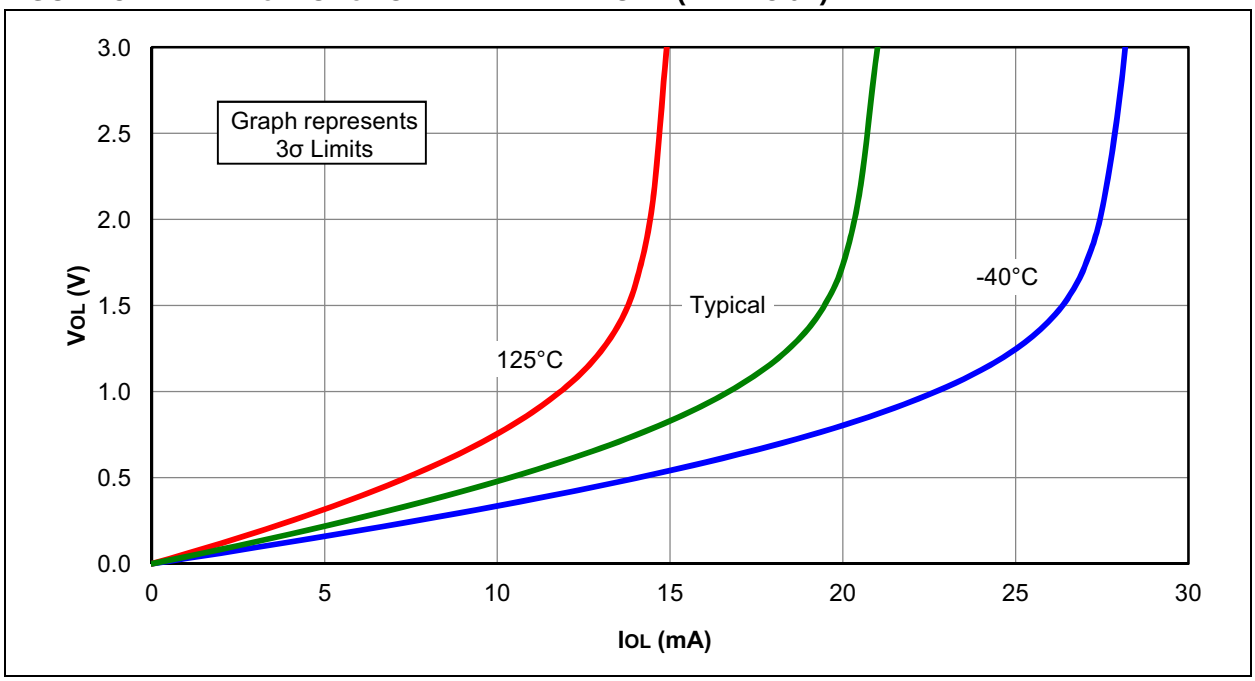

FIGURE 31-45: VOH vs. IOH OVER TEMPERATURE (VDD = 1.8V)

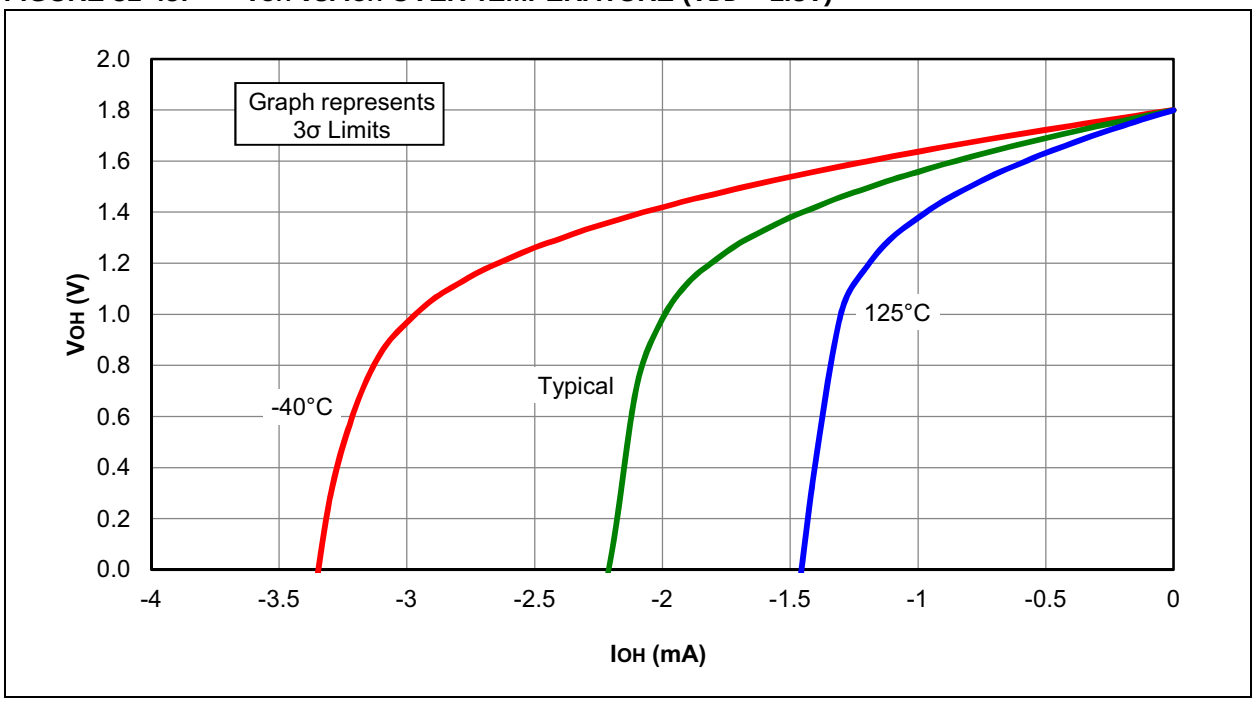

FIGURE 31-46: VOL vs. IOL OVER TEMPERATURE (VDD = 1.8V)

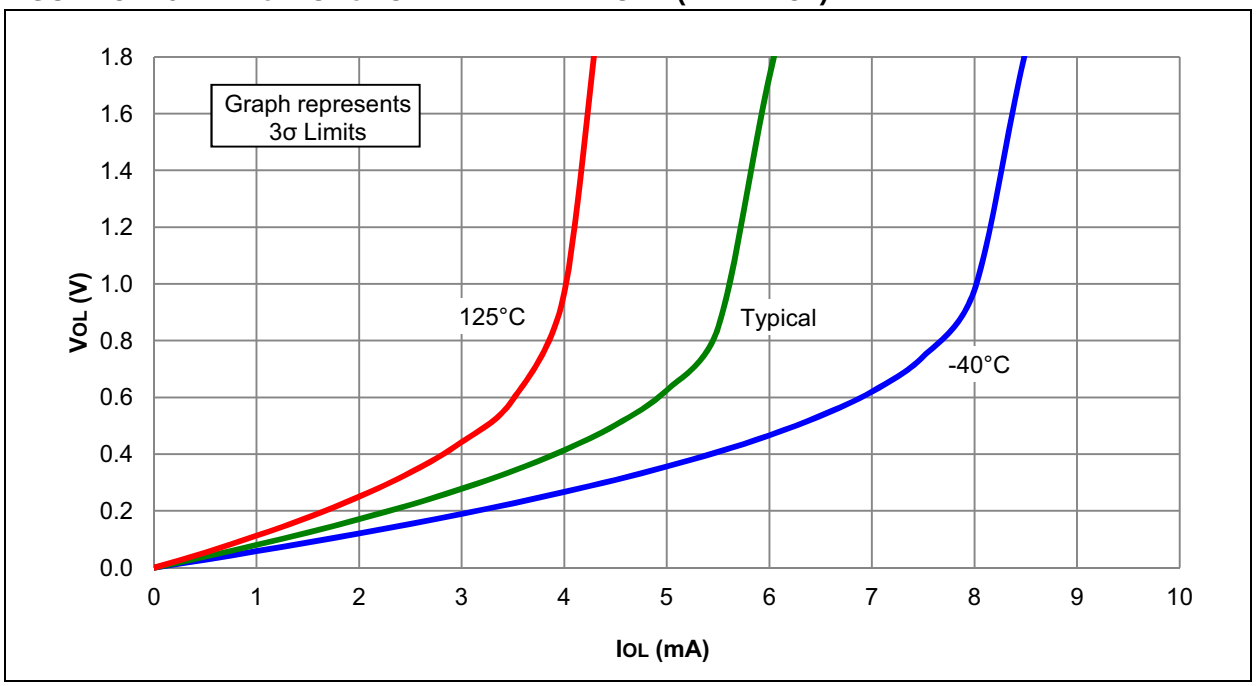

© 2010-2015 Microchip Technology Inc.

FIGURE 31-47: POR RELEASE VOLTAGE

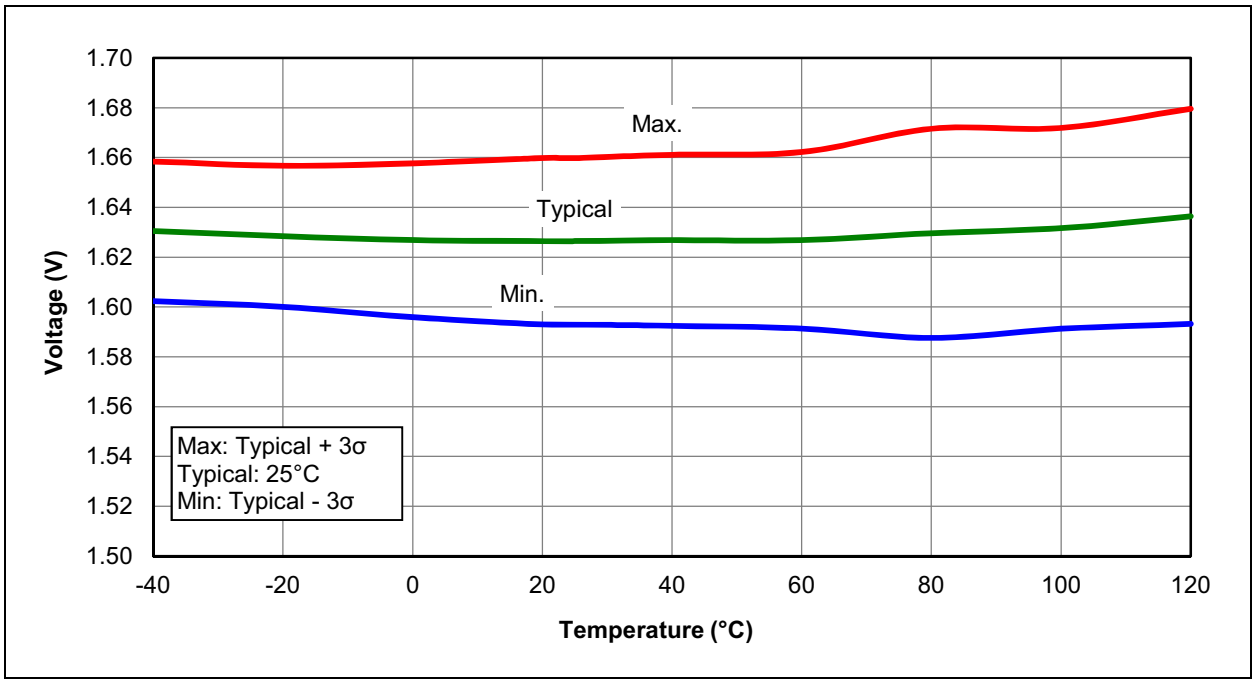

FIGURE 31-48: POR REARM VOLTAGE, PIC16F1824/8 ONLY

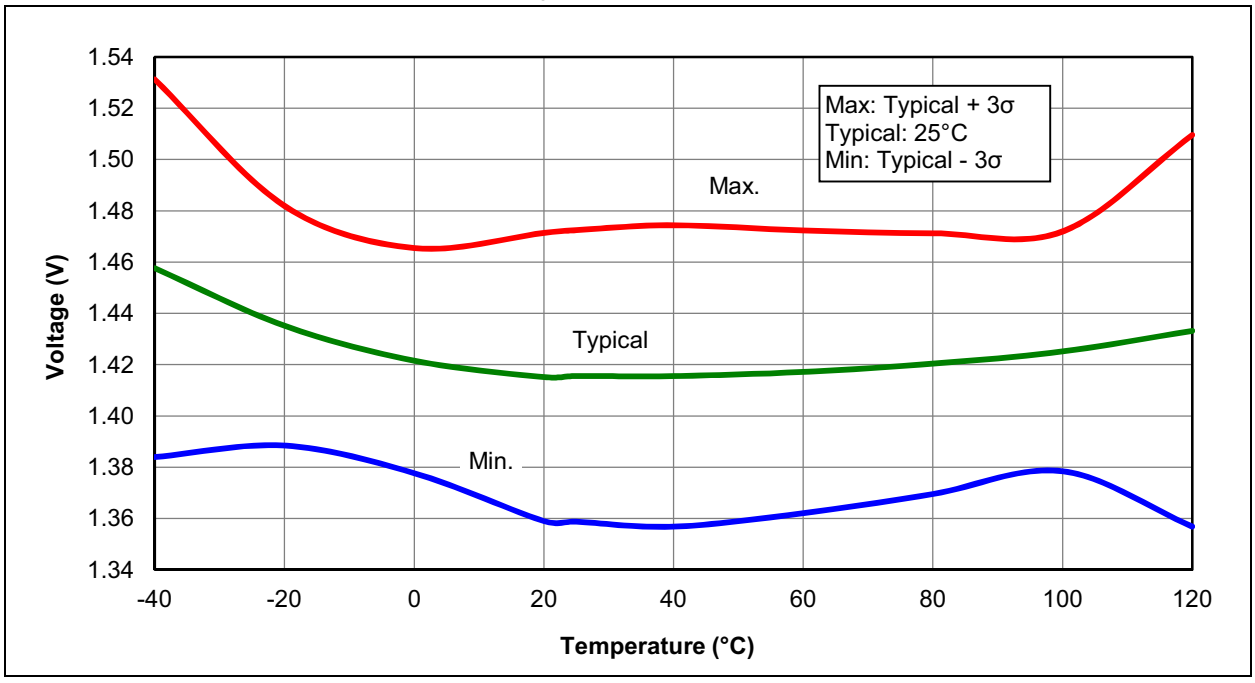

FIGURE 31-49: BROWN-OUT RESET VOLTAGE, BORV = 1

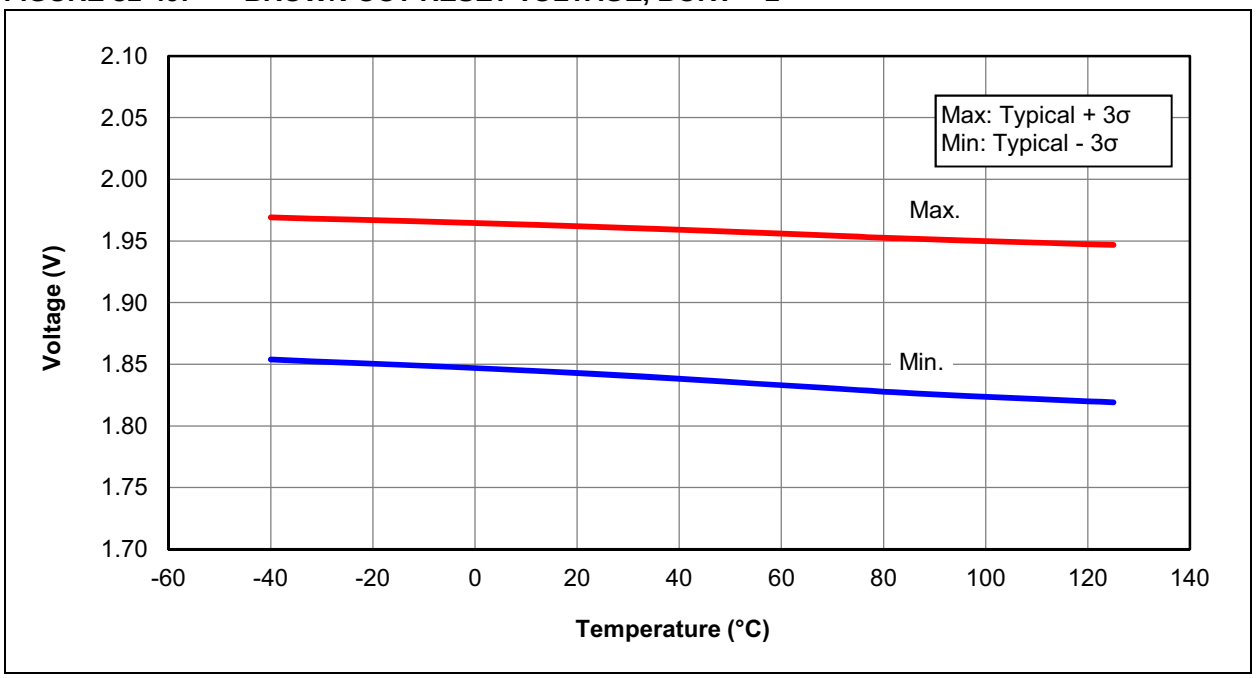

FIGURE 31-50: BROWN-OUT RESET HYSTERESIS, BORV = 1

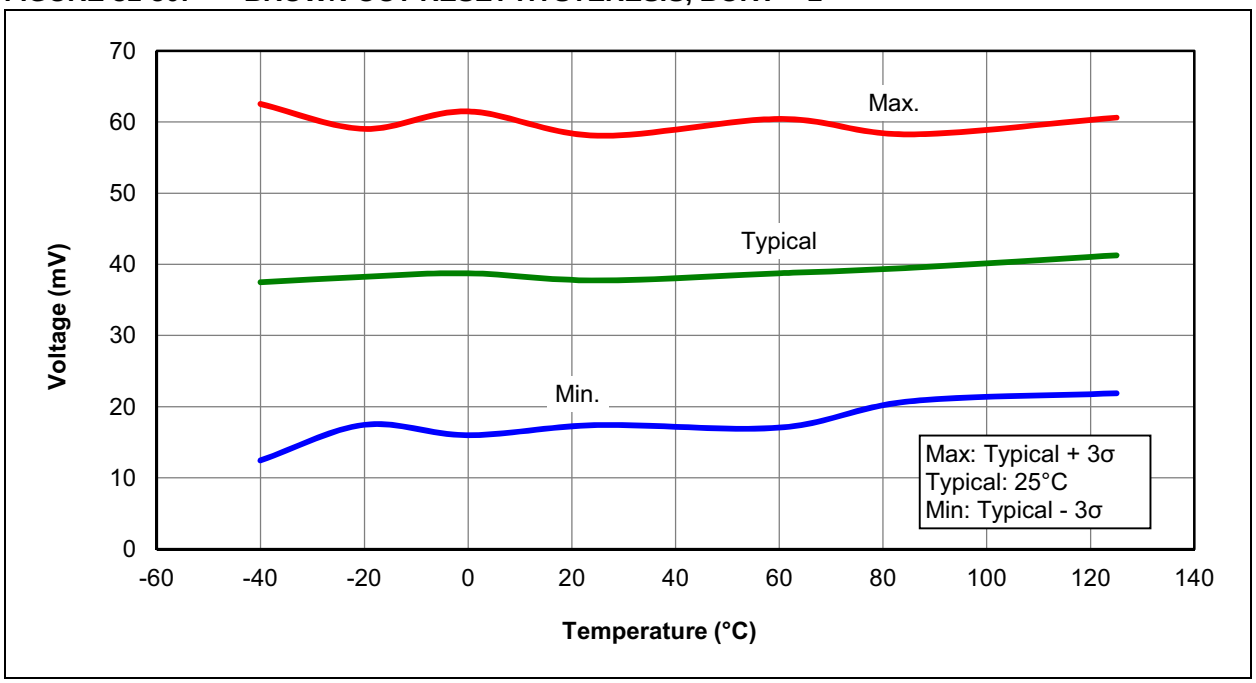

© 2010-2015 Microchip Technology Inc.

FIGURE 31-51: BROWN-OUT RESET VOLTAGE, BORV = 0

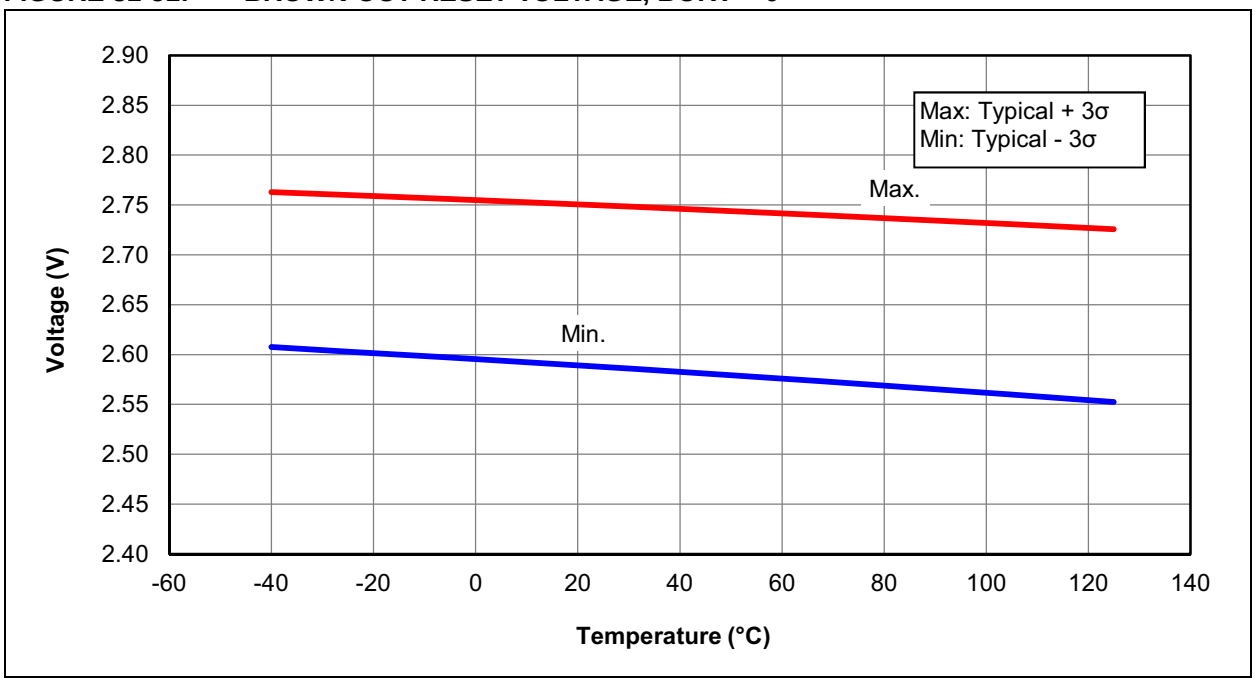

FIGURE 31-52: WDT TIME-OUT PERIOD

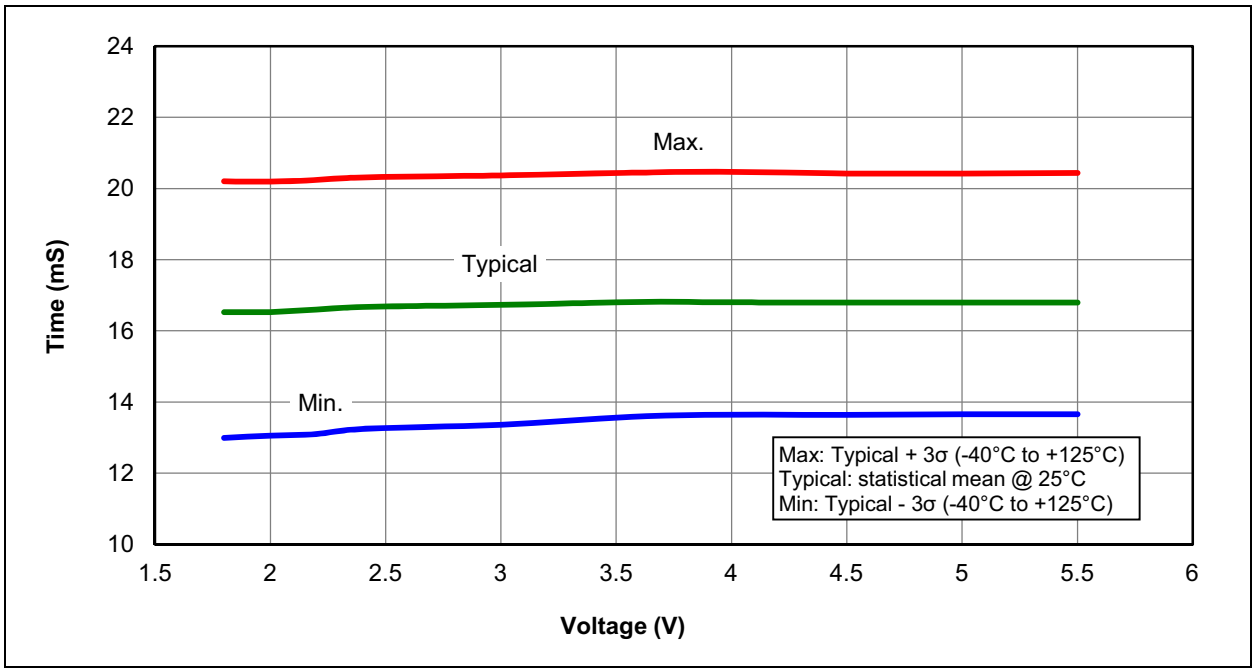

FIGURE 31-53: PWRT PERIOD

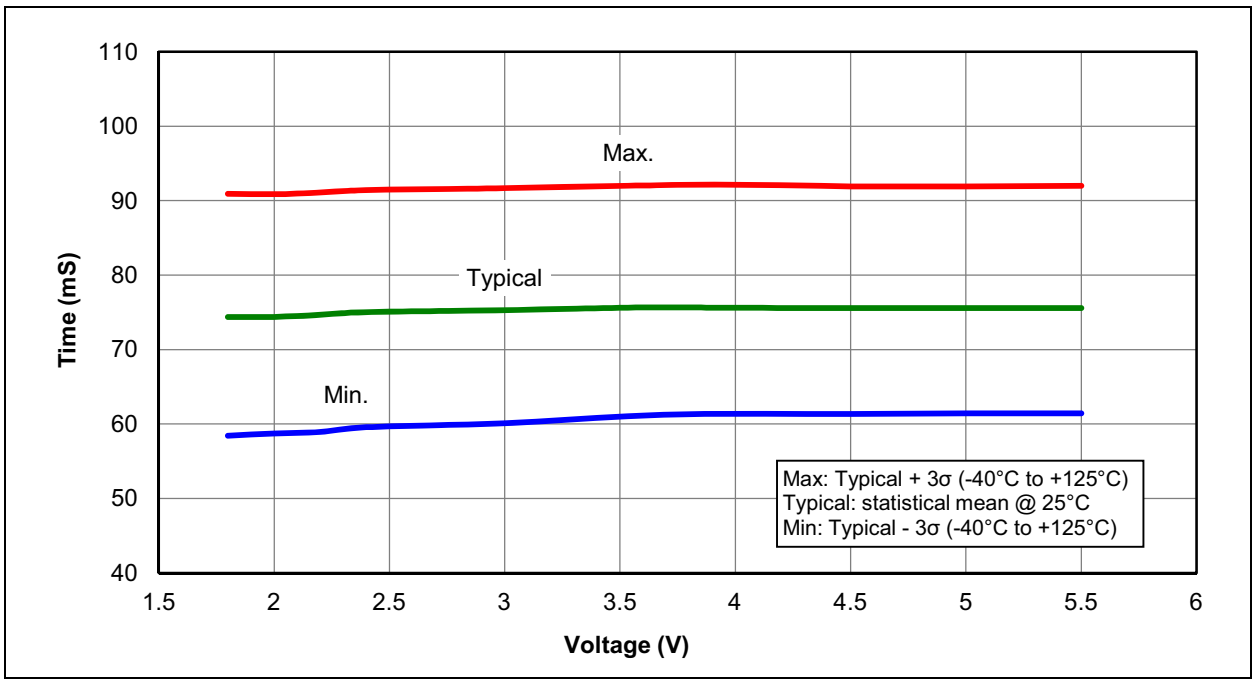

© 2010-2015 Microchip Technology Inc.

FIGURE 31-54: COMPARATOR HYSTERESIS, NORMAL-POWER MODE (CxSP = 1, CxHYS = 1)

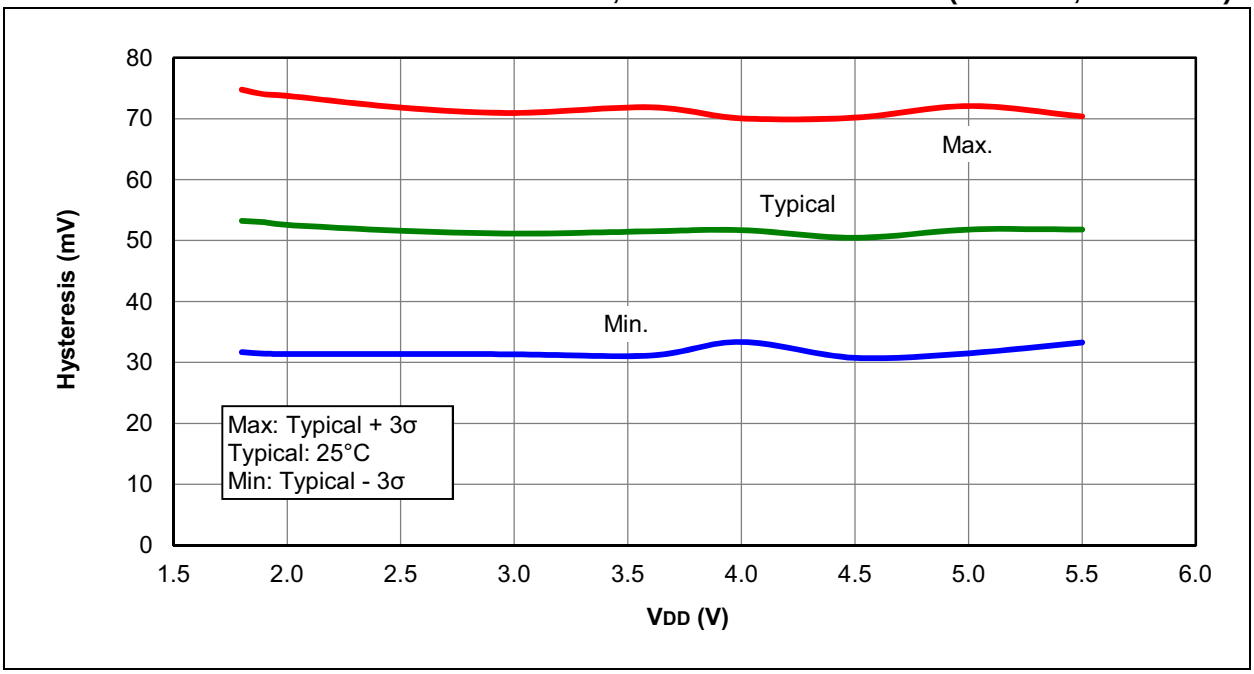

FIGURE 31-55: COMPARATOR HYSTERESIS, LOW-POWER MODE (CxSP = 0, CxHYS = 1)

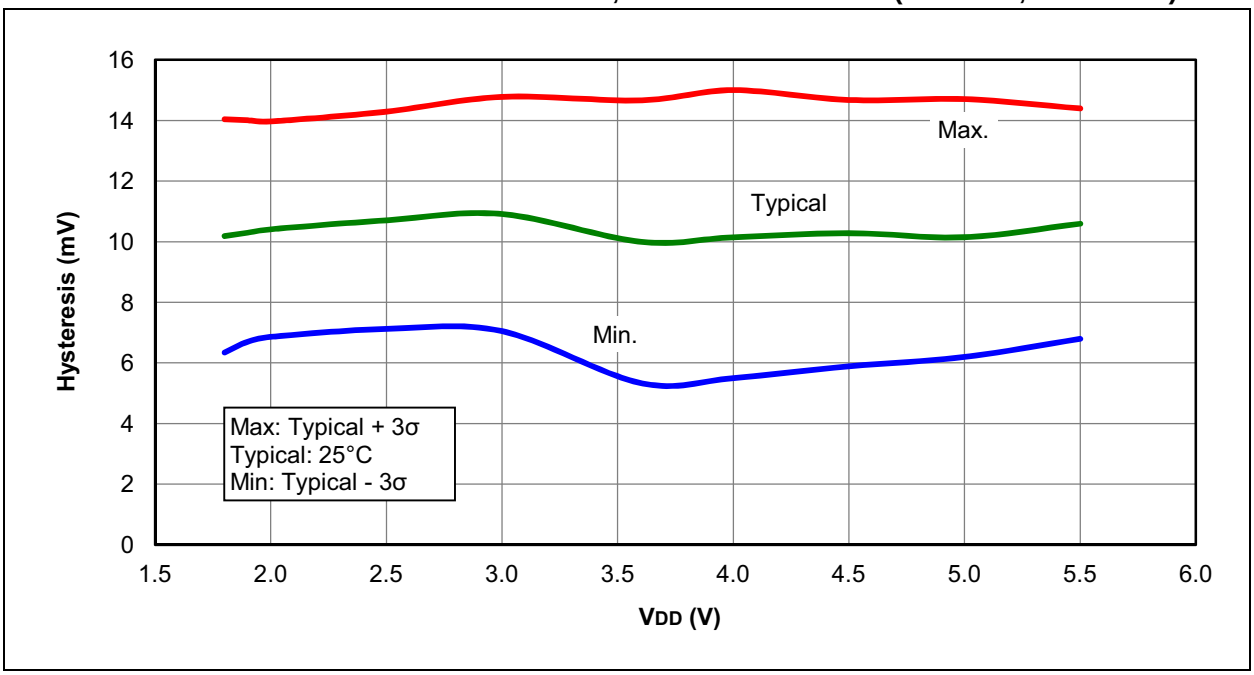

FIGURE 31-56: COMPARATOR RESPONSE TIME, NORMAL-POWER MODE (CxSP = 1)

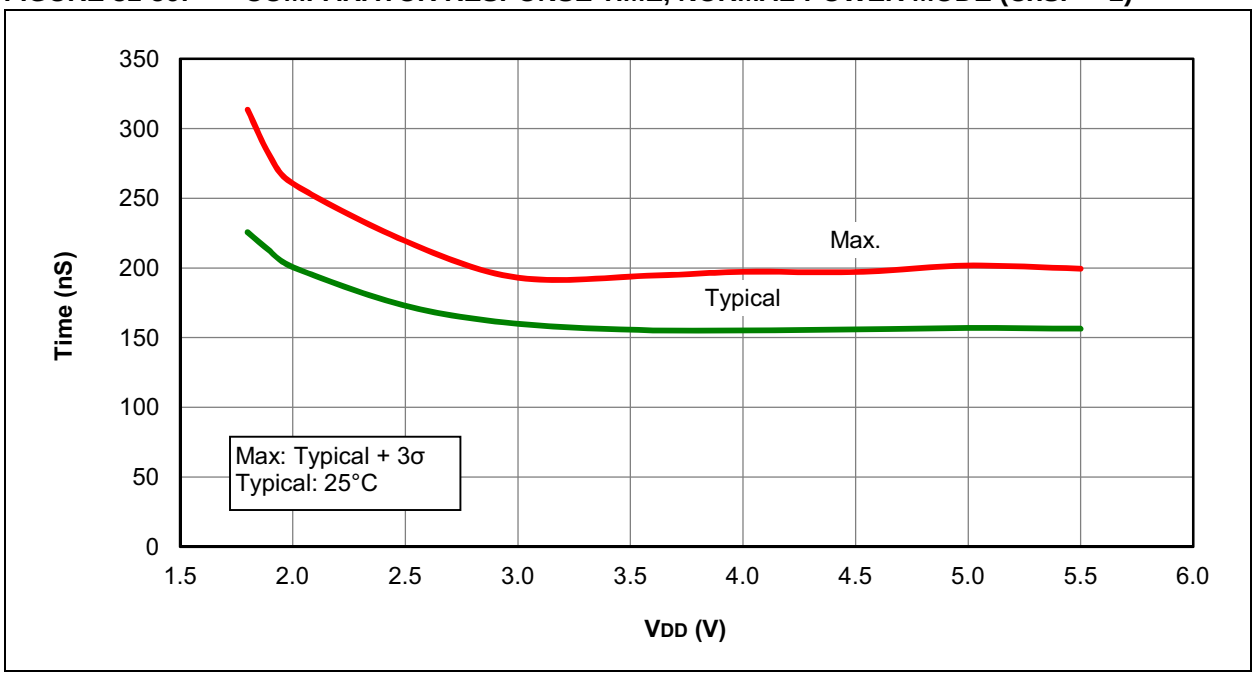

FIGURE 31-57: COMPARATOR RESPONSE TIME OVER TEMPERATURE, NORMAL-POWER MODE (CxSP = 1)

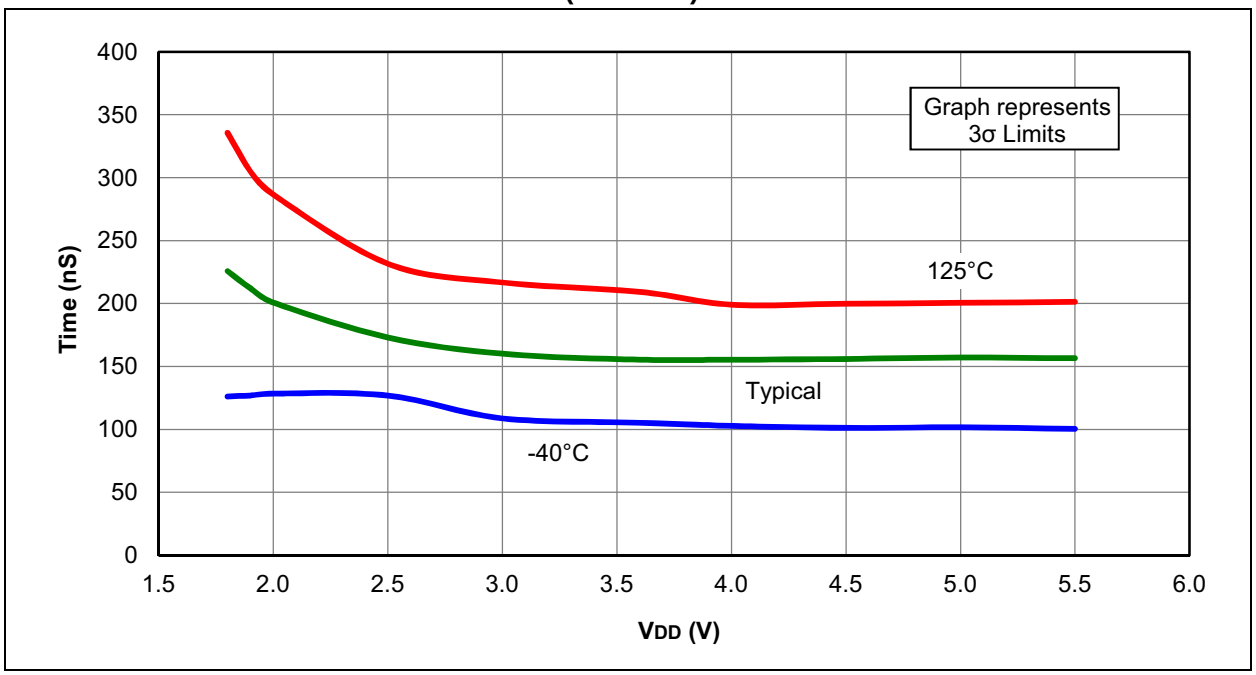

© 2010-2015 Microchip Technology Inc.

FIGURE 31-58: COMPARATOR INPUT OFFSET AT 25°C, NORMAL-POWER MODE (CxSP = 1), PIC16F1824/8 ONLY

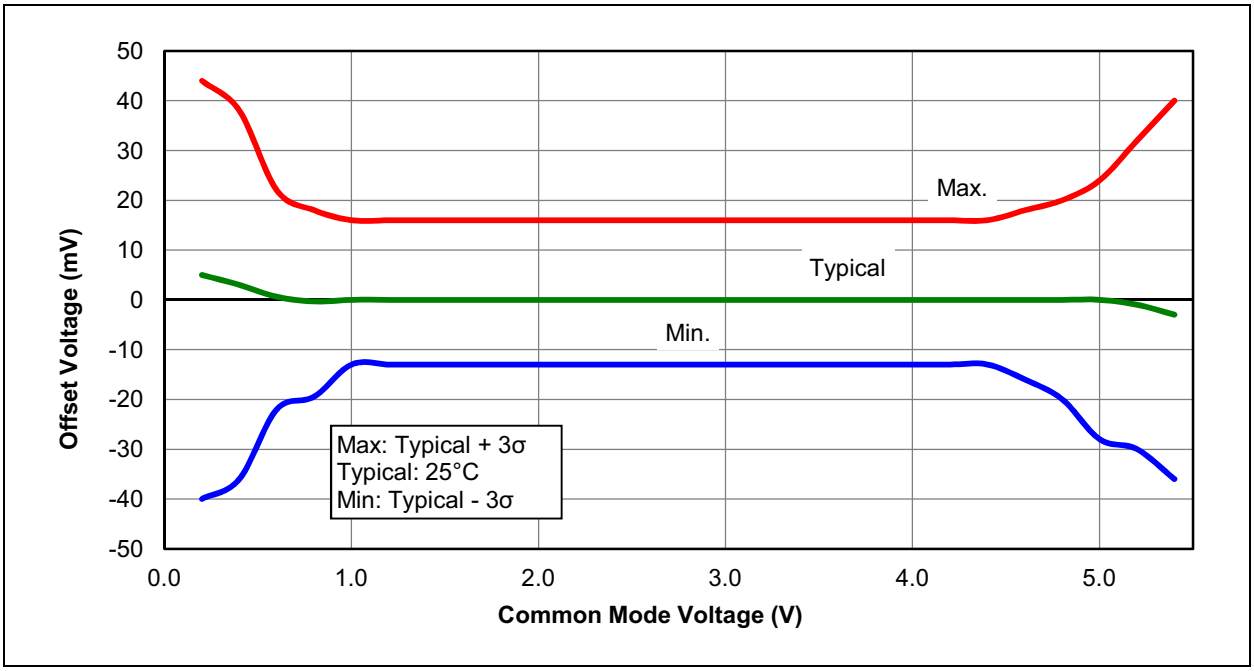

32.0 DEVELOPMENT SUPPORT

The PIC® microcontrollers (MCU) and dsPIC® digital signal controllers (DSC) are supported with a full range of software and hardware development tools:

- Integrated Development Environment
  - MPLAB® X IDE Software
- Compilers/Assemblers/Linkers
  - MPLAB XC Compiler
  - MPASM™ Assembler
  - MPLINK™ Object Linker/ MPLIB™ Object Librarian
  - MPLAB Assembler/Linker/Librarian for Various Device Families
- Simulators
  - MPLAB X SIM Software Simulator
- Emulators
  - MPLAB REAL ICE™ In-Circuit Emulator
- In-Circuit Debuggers/Programmers
  - MPLAB ICD 3
  - PICkit™ 3
- Device Programmers
  - MPLAB PM3 Device Programmer
- Low-Cost Demonstration/Development Boards, Evaluation Kits and Starter Kits
- Third-party development tools

32.1 MPLAB X Integrated Development Environment Software

The MPLAB X IDE is a single, unified graphical user interface for Microchip and third-party software, and hardware development tool that runs on Windows®, Linux and Mac OS® X. Based on the NetBeans IDE, MPLAB X IDE is an entirely new IDE with a host of free software components and plug-ins for high-performance application development and debugging. Moving between tools and upgrading from software simulators to hardware debugging and programming tools is simple with the seamless user interface.

With complete project management, visual call graphs, a configurable watch window and a feature-rich editor that includes code completion and context menus, MPLAB X IDE is flexible and friendly enough for new users. With the ability to support multiple tools on multiple projects with simultaneous debugging, MPLAB X IDE is also suitable for the needs of experienced users.

Feature-Rich Editor:

- Color syntax highlighting
- Smart code completion makes suggestions and provides hints as you type
- Automatic code formatting based on user-defined rules
- Live parsing

User-Friendly, Customizable Interface:

- Fully customizable interface: toolbars, toolbar buttons, windows, window placement, etc.
- Call graph window

Project-Based Workspaces:

- Multiple projects
- Multiple tools
- Multiple configurations
- Simultaneous debugging sessions

File History and Bug Tracking:

- Local file history feature
- Built-in support for Bugzilla issue tracker

© 2010-2015 Microchip Technology Inc.

32.2 MPLAB XC Compilers

The MPLAB XC Compilers are complete ANSI C compilers for all of Microchip's 8, 16, and 32-bit MCU and DSC devices. These compilers provide powerful integration capabilities, superior code optimization and ease of use. MPLAB XC Compilers run on Windows, Linux or MAC OS X.

For easy source level debugging, the compilers provide debug information that is optimized to the MPLAB X IDE.

The free MPLAB XC Compiler editions support all devices and commands, with no time or memory restrictions, and offer sufficient code optimization for most applications.

MPLAB XC Compilers include an assembler, linker and utilities. The assembler generates relocatable object files that can then be archived or linked with other relocatable object files and archives to create an executable file. MPLAB XC Compiler uses the assembler to produce its object file. Notable features of the assembler include:

- Support for the entire device instruction set
- Support for fixed-point and floating-point data
- Command-line interface
- Rich directive set
- Flexible macro language
- MPLAB X IDE compatibility

32.3 MPASM Assembler

The MPASM Assembler is a full-featured, universal macro assembler for PIC10/12/16/18 MCUs.

The MPASM Assembler generates relocatable object files for the MPLINK Object Linker, Intel® standard HEX files, MAP files to detail memory usage and symbol reference, absolute LST files that contain source lines and generated machine code, and COFF files for debugging.

The MPASM Assembler features include:

- Integration into MPLAB X IDE projects
- User-defined macros to streamline assembly code
- Conditional assembly for multipurpose source files
- Directives that allow complete control over the assembly process

32.4 MPLINK Object Linker/ MPLIB Object Librarian

The MPLINK Object Linker combines relocatable objects created by the MPASM Assembler. It can link relocatable objects from precompiled libraries, using directives from a linker script.

The MPLIB Object Librarian manages the creation and modification of library files of precompiled code. When a routine from a library is called from a source file, only the modules that contain that routine will be linked in with the application. This allows large libraries to be used efficiently in many different applications.

The object linker/library features include:

- Efficient linking of single libraries instead of many smaller files
- Enhanced code maintainability by grouping related modules together
- Flexible creation of libraries with easy module listing, replacement, deletion and extraction

32.5 MPLAB Assembler, Linker and Librarian for Various Device Families

MPLAB Assembler produces relocatable machine code from symbolic assembly language for PIC24, PIC32 and dsPIC DSC devices. MPLAB XC Compiler uses the assembler to produce its object file. The assembler generates relocatable object files that can then be archived or linked with other relocatable object files and archives to create an executable file. Notable features of the assembler include:

- Support for the entire device instruction set
- Support for fixed-point and floating-point data
- Command-line interface
- Rich directive set
- Flexible macro language
- MPLAB X IDE compatibility

32.6 MPLAB X SIM Software Simulator

The MPLAB X SIM Software Simulator allows code development in a PC-hosted environment by simulating the PIC MCUs and dsPIC DSCs on an instruction level. On any given instruction, the data areas can be examined or modified and stimuli can be applied from a comprehensive stimulus controller. Registers can be logged to files for further run-time analysis. The trace buffer and logic analyzer display extend the power of the simulator to record and track program execution, actions on I/O, most peripherals and internal registers.

The MPLAB X SIM Software Simulator fully supports symbolic debugging using the MPLAB XC Compilers, and the MPASM and MPLAB Assemblers. The software simulator offers the flexibility to develop and debug code outside of the hardware laboratory environment, making it an excellent, economical software development tool.

32.7 MPLAB REAL ICE In-Circuit Emulator System

The MPLAB REAL ICE In-Circuit Emulator System is Microchip's next generation high-speed emulator for Microchip Flash DSC and MCU devices. It debugs and programs all 8, 16 and 32-bit MCU, and DSC devices with the easy-to-use, powerful graphical user interface of the MPLAB X IDE.

The emulator is connected to the design engineer's PC using a high-speed USB 2.0 interface and is connected to the target with either a connector compatible with in-circuit debugger systems (RJ-11) or with the new high-speed, noise tolerant, Low-Voltage Differential Signal (LVDS) interconnection (CAT5).

The emulator is field upgradable through future firmware downloads in MPLAB X IDE. MPLAB REAL ICE offers significant advantages over competitive emulators including full-speed emulation, run-time variable watches, trace analysis, complex breakpoints, logic probes, a ruggedized probe interface and long (up to three meters) interconnection cables.

32.8 MPLAB ICD 3 In-Circuit Debugger System

The MPLAB ICD 3 In-Circuit Debugger System is Microchip's most cost-effective, high-speed hardware debugger/programmer for Microchip Flash DSC and MCU devices. It debugs and programs PIC Flash microcontrollers and dsPIC DSCs with the powerful, yet easy-to-use graphical user interface of the MPLAB IDE.

The MPLAB ICD 3 In-Circuit Debugger probe is connected to the design engineer's PC using a high-speed USB 2.0 interface and is connected to the target with a connector compatible with the MPLAB ICD 2 or MPLAB REAL ICE systems (RJ-11). MPLAB ICD 3 supports all MPLAB ICD 2 headers.

32.9 PICkit 3 In-Circuit Debugger/ Programmer

The MPLAB PICkit 3 allows debugging and programming of PIC and dsPIC Flash microcontrollers at a most affordable price point using the powerful graphical user interface of the MPLAB IDE. The MPLAB PICkit 3 is connected to the design engineer's PC using a full-speed USB interface and can be connected to the target via a Microchip debug (RJ-11) connector (compatible with MPLAB ICD 3 and MPLAB REAL ICE). The connector uses two device I/O pins and the Reset line to implement in-circuit debugging and In-Circuit Serial Programming™ (ICSP™).

32.10 MPLAB PM3 Device Programmer

The MPLAB PM3 Device Programmer is a universal, CE compliant device programmer with programmable voltage verification at V_{DDMIN} and V_{DDMAX} for maximum reliability. It features a large LCD display (128 x 64) for menus and error messages, and a modular, detachable socket assembly to support various package types. The ICSP cable assembly is included as a standard item. In Stand-Alone mode, the MPLAB PM3 Device Programmer can read, verify and program PIC devices without a PC connection. It can also set code protection in this mode. The MPLAB PM3 connects to the host PC via an RS-232 or USB cable. The MPLAB PM3 has high-speed communications and optimized algorithms for quick programming of large memory devices, and incorporates an MMC card for file storage and data applications.

© 2010-2015 Microchip Technology Inc.

32.11 Demonstration/Development Boards, Evaluation Kits, and Starter Kits

A wide variety of demonstration, development and evaluation boards for various PIC MCUs and dsPIC DSCs allows quick application development on fully functional systems. Most boards include prototyping areas for adding custom circuitry and provide application firmware and source code for examination and modification.

The boards support a variety of features, including LEDs, temperature sensors, switches, speakers, RS-232 interfaces, LCD displays, potentiometers and additional EEPROM memory.

The demonstration and development boards can be used in teaching environments, for prototyping custom circuits and for learning about various microcontroller applications.

In addition to the PICDEM™ and dsPICDEM™ demonstration/development board series of circuits, Microchip has a line of evaluation kits and demonstration software for analog filter design, KEELOQ® security ICs, CAN, IrDA®, PowerSmart battery management, SEEVAL® evaluation system, Sigma-Delta ADC, flow rate sensing, plus many more.

Also available are starter kits that contain everything needed to experience the specified device. This usually includes a single application and debug capability, all on one board.

Check the Microchip web page (www.microchip.com) for the complete list of demonstration, development and evaluation kits.

32.12 Third-Party Development Tools

Microchip also offers a great collection of tools from third-party vendors. These tools are carefully selected to offer good value and unique functionality.

- Device Programmers and Gang Programmers from companies, such as SoftLog and CCS
- Software Tools from companies, such as Gimpel and Trace Systems
- Protocol Analyzers from companies, such as Saleae and Total Phase
- Demonstration Boards from companies, such as MikroElektronika, Digilent® and Olimex
- Embedded Ethernet Solutions from companies, such as EZ Web Lynx, WIZnet and IPLogika®

33.0 PACKAGING INFORMATION

33.1 Package Marking Information

14-Lead PDIP (300 mil)

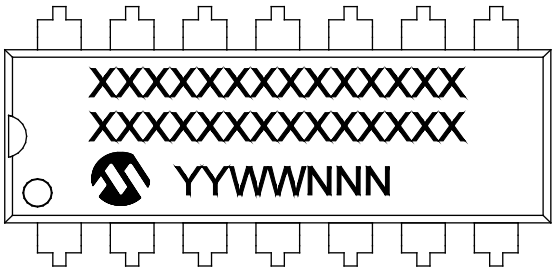

Example

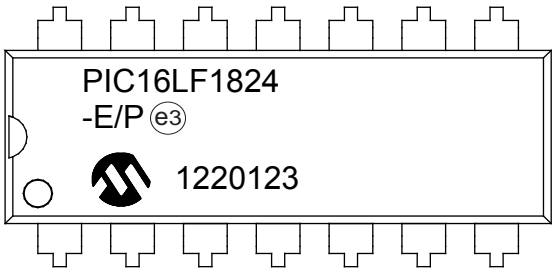

14-Lead SOIC (3.90 mm)

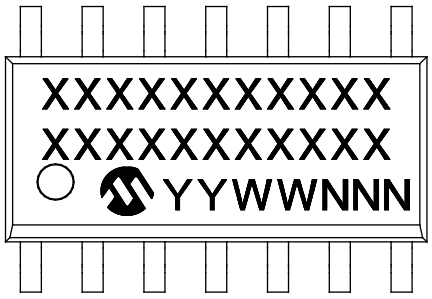

Example

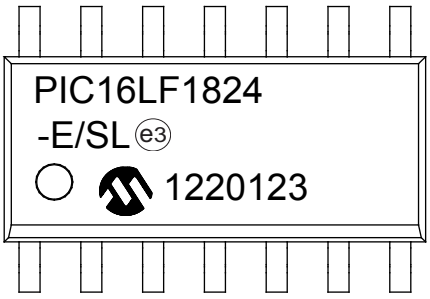

14-Lead TSSOP (4.4 mm)

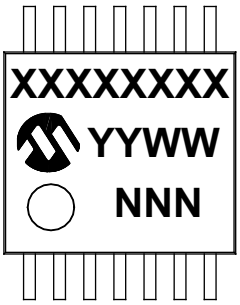

Example

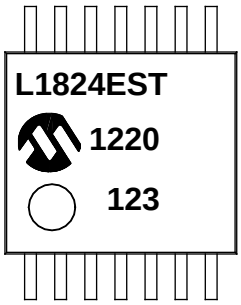

Legend:	XX...X	Customer-specific information
	Y	Year code (last digit of calendar year)
	YY	Year code (last 2 digits of calendar year)
	WW	Week code (week of January 1 is week '01')
	NNN	Alphanumeric traceability code
	(e3)	Pb-free JEDEC® designator for Matte Tin (Sn)
	*	This package is Pb-free. The Pb-free JEDEC designator ((e3)) can be found on the outer packaging for this package.

Note: In the event the full Microchip part number cannot be marked on one line, it will be carried over to the next line, thus limiting the number of available characters for customer-specific information.

© 2010-2015 Microchip Technology Inc.

33.2 Package Marking Information (Continued)

16-Lead QFN (4x4x0.9 mm)
16-Lead UQFN (4x4x0.5mm)

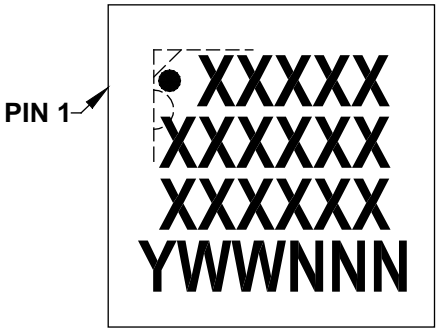

Example

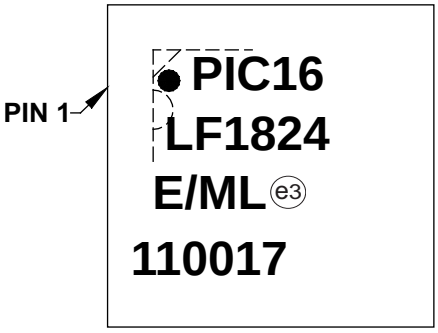

20-Lead PDIP (300 mil)

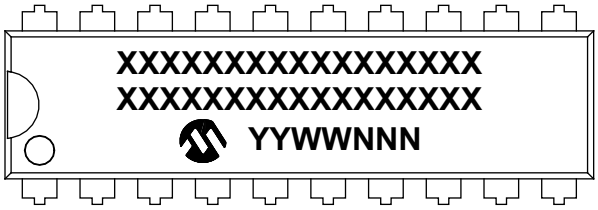

Example

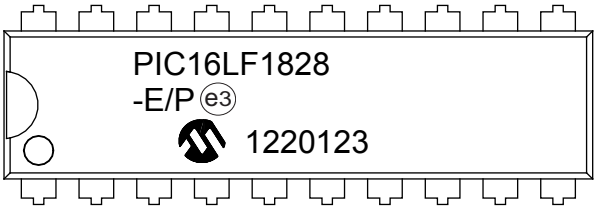

20-Lead SOIC (7.50 mm)

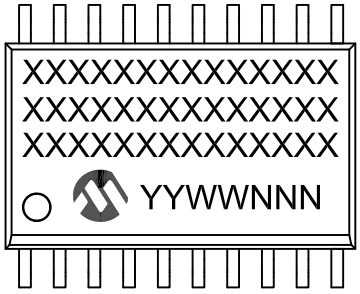

Example

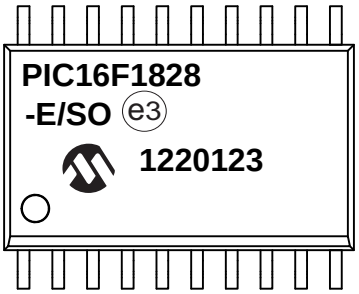

33.3 Package Marking Information (Continued)

20-Lead SSOP (5.30 mm)

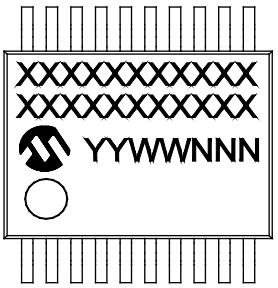

Example

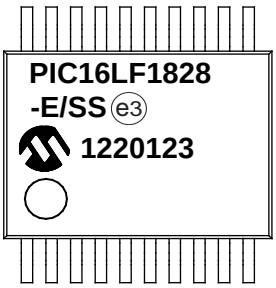

20-Lead QFN (4x4x0.9 mm)
20-Lead UQFN (4x4x0.5mm)

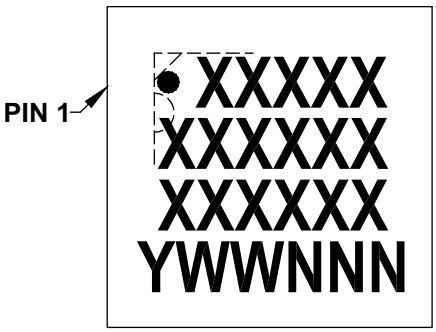

Example

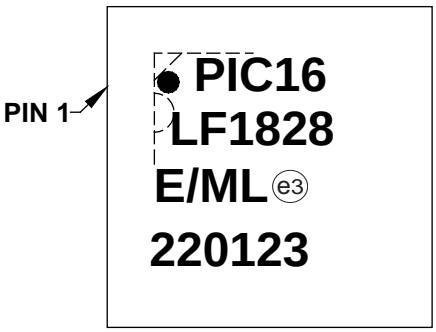

© 2010-2015 Microchip Technology Inc.

33.4 Package Details

The following sections give the technical details of the packages.

14-Lead Plastic Dual In-Line (P) – 300 mil Body [PDIP]

Note: For the most current package drawings, please see the Microchip Packaging Specification located at http://www.microchip.com/packaging

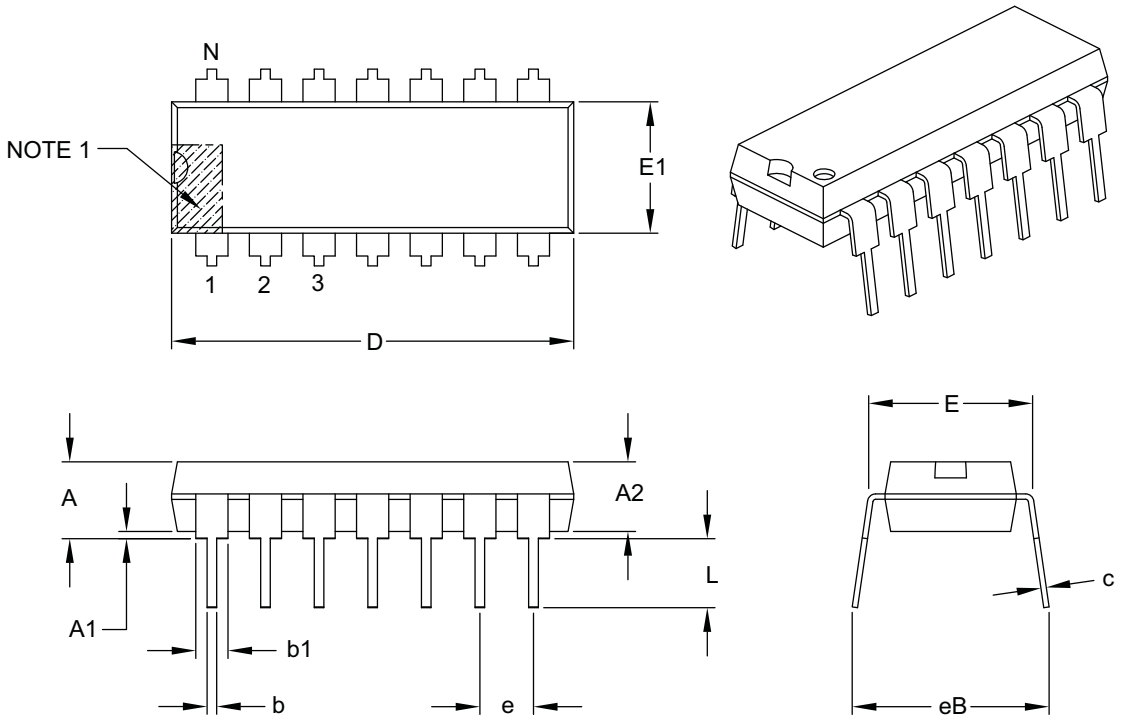

Units		INCHES		
Dimension Limits		MIN	NOM	MAX
Number of Pins	N		14	
Pitch	e		.100 BSC	
Top to Seating Plane	A	–	–	.210
Molded Package Thickness	A2	.115	.130	.195
Base to Seating Plane	A1	.015	–	–
Shoulder to Shoulder Width	E	.290	.310	.325
Molded Package Width	E1	.240	.250	.280
Overall Length	D	.735	.750	.775
Tip to Seating Plane	L	.115	.130	.150
Lead Thickness	c	.008	.010	.015
Upper Lead Width	b1	.045	.060	.070
Lower Lead Width	b	.014	.018	.022
Overall Row Spacing §	eB	–	–	.430

Notes:

1. Pin 1 visual index feature may vary, but must be located with the hatched area.
2. § Significant Characteristic.
3. Dimensions D and E1 do not include mold flash or protrusions. Mold flash or protrusions shall not exceed .010" per side.
4. Dimensioning and tolerancing per ASME Y14.5M.

   BSC: Basic Dimension. Theoretically exact value shown without tolerances.

Microchip Technology Drawing C04-005B

14-Lead Plastic Small Outline (SL) - Narrow, 3.90 mm Body [SOIC]

Note: For the most current package drawings, please see the Microchip Packaging Specification located at http://www.microchip.com/packaging

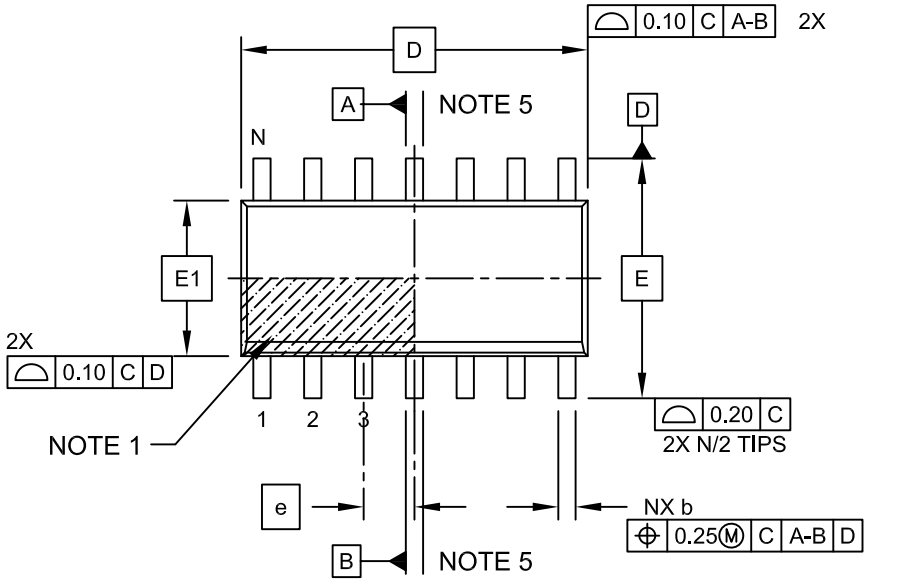

TOP VIEW

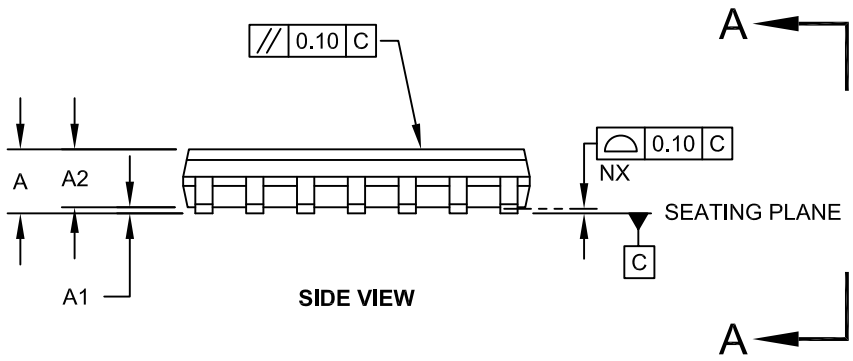

SIDE VIEW

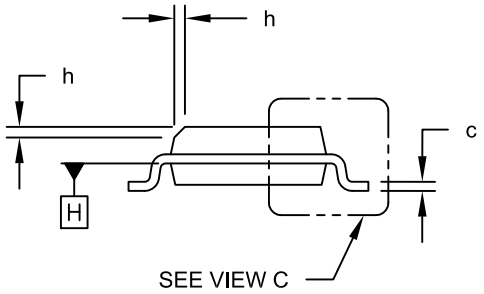

VIEW A-A

Microchip Technology Drawing No. C04-065C Sheet 1 of 2

© 2010-2015 Microchip Technology Inc.

14-Lead Plastic Small Outline (SL) - Narrow, 3.90 mm Body [SOIC]

Note: For the most current package drawings, please see the Microchip Packaging Specification located at http://www.microchip.com/packaging

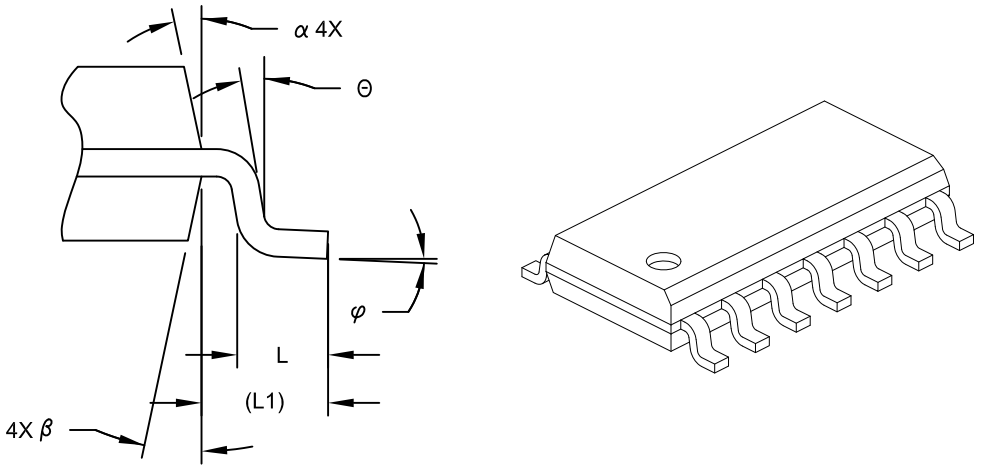

VIEW C

Units		MILLIMETERS		
Dimension Limits		MIN	NOM	MAX
Number of Pins	N		14	
Pitch	e		1.27 BSC	
Overall Height	A	-	-	1.75
Molded Package Thickness	A2	1.25	-	-
Standoff §	A1	0.10	-	0.25
Overall Width	E		6.00 BSC	
Molded Package Width	E1		3.90 BSC	
Overall Length	D		8.65 BSC	
Chamfer (Optional)	h	0.25	-	0.50
Foot Length	L	0.40	-	1.27
Footprint	L1		1.04 REF	
Lead Angle	Θ	0°	-	-
Foot Angle	φ	0°	-	8°
Lead Thickness	c	0.10	-	0.25
Lead Width	b	0.31	-	0.51
Mold Draft Angle Top	α	5°	-	15°
Mold Draft Angle Bottom	β	5°	-	15°

Notes:

1. Pin 1 visual index feature may vary, but must be located within the hatched area.
2. § Significant Characteristic
3. Dimension D does not include mold flash, protrusions or gate burrs, which shall not exceed 0.15 mm per end. Dimension E1 does not include interlead flash or protrusion, which shall not exceed 0.25 mm per side.
4. Dimensioning and tolerancing per ASME Y14.5M

   BSC: Basic Dimension. Theoretically exact value shown without tolerances.

   REF: Reference Dimension, usually without tolerance, for information purposes only.
5. Datums A & B to be determined at Datum H.

Microchip Technology Drawing No. C04-065C Sheet 2 of 2

14-Lead Plastic Small Outline (SL) - Narrow, 3.90 mm Body [SOIC]

Note: For the most current package drawings, please see the Microchip Packaging Specification located at http://www.microchip.com/packaging

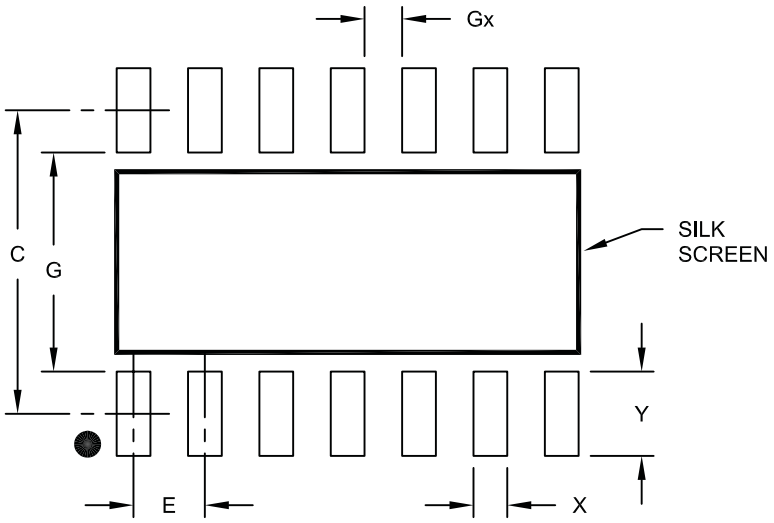

RECOMMENDED LAND PATTERN

Units		MILLIMETERS		
Dimension Limits		MIN	NOM	MAX
Contact Pitch	E	1.27 BSC		
Contact Pad Spacing	C		5.40	
Contact Pad Width	X			0.60
Contact Pad Length	Y			1.50
Distance Between Pads	Gx	0.67		
Distance Between Pads	G	3.90		

Notes:

1. Dimensioning and tolerancing per ASME Y14.5M

BSC: Basic Dimension. Theoretically exact value shown without tolerances.

Microchip Technology Drawing No. C04-2065A

© 2010-2015 Microchip Technology Inc.

14-Lead Plastic Thin Shrink Small Outline (ST) - 4.4 mm Body [TSSOP]

Note: For the most current package drawings, please see the Microchip Packaging Specification located at http://www.microchip.com/packaging

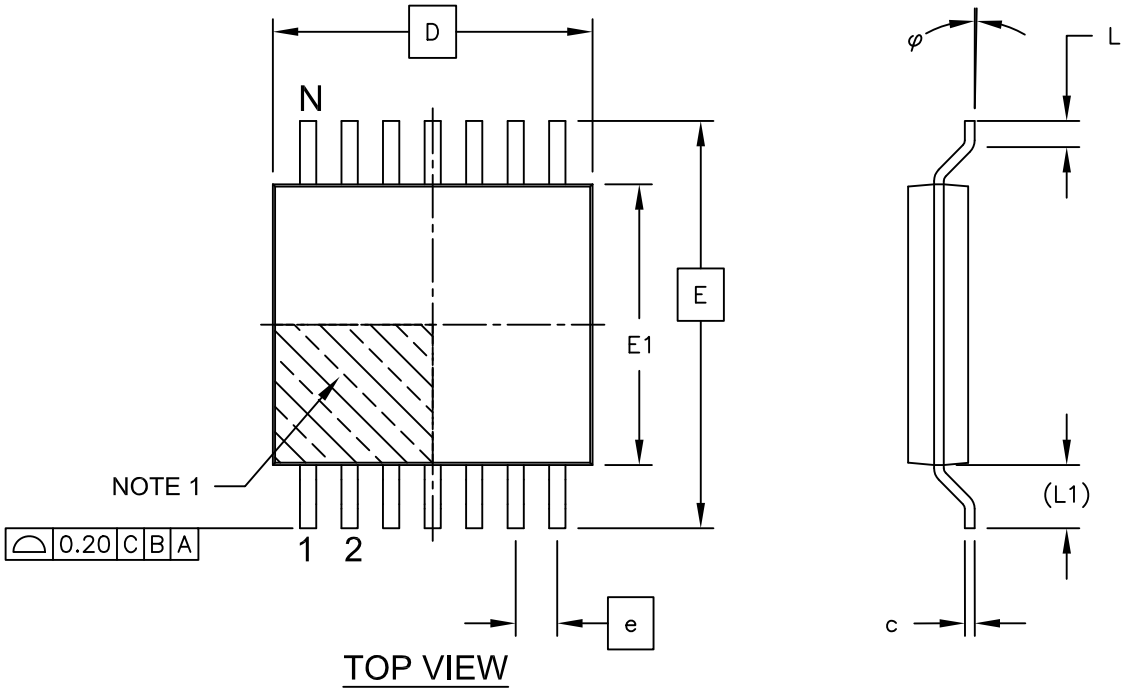

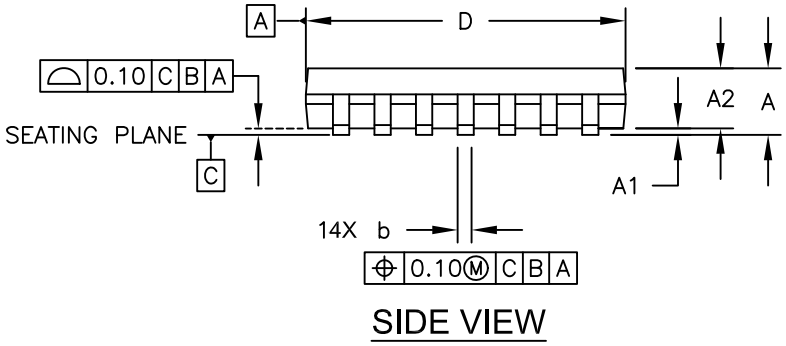

Microchip Technology Drawing C04-087C Sheet 1 of 2

14-Lead Plastic Thin Shrink Small Outline (ST) - 4.4 mm Body [TSSOP]

Note: For the most current package drawings, please see the Microchip Packaging Specification located at http://www.microchip.com/packaging

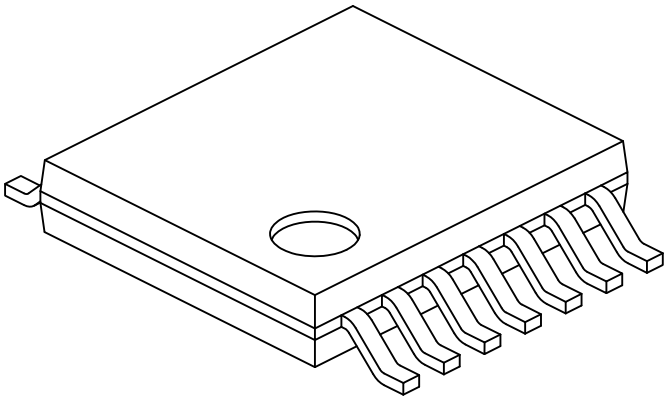

Units		MILLIMETERS		
Dimension Limits		MIN	NOM	MAX
Number of Pins	N		14	
Pitch	e		0.65 BSC	
Overall Height	A	-	-	1.20
Molded Package Thickness	A2	0.80	1.00	1.05
Standoff	A1	0.05	-	0.15
Overall Width	E		6.40 BSC	
Molded Package Width	E1	4.30	4.40	4.50
Molded Package Length	D	4.90	5.00	5.10
Foot Length	L	0.45	0.60	0.75
Footprint	(L1)		1.00 REF	
Foot Angle	φ	0°	-	8°
Lead Thickness	c	0.09	-	0.20
Lead Width	b	0.19	-	0.30

Notes:

1. Pin 1 visual index feature may vary, but must be located within the hatched area.
2. Dimensions D and E1 do not include mold flash or protrusions. Mold flash or protrusions shall not exceed 0.15mm per side.
3. Dimensioning and tolerancing per ASME Y14.5M

BSC: Basic Dimension. Theoretically exact value shown without tolerances.
REF: Reference Dimension, usually without tolerance, for information purposes only.

Microchip Technology Drawing No. C04-087C Sheet 2 of 2

© 2010-2015 Microchip Technology Inc.

14-Lead Plastic Thin Shrink Small Outline (ST) - 4.4 mm Body [TSSOP]

Note: For the most current package drawings, please see the Microchip Packaging Specification located at http://www.microchip.com/packaging

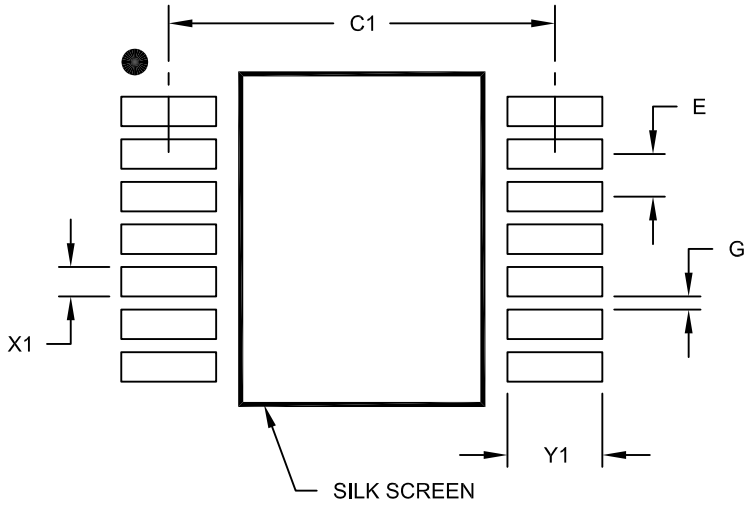

RECOMMENDED LAND PATTERN

Units		MILLIMETERS		
Dimension Limits		MIN	NOM	MAX
Contact Pitch	E		0.65 BSC	
Contact Pad Spacing	C1		5.90	
Contact Pad Width (X14)	X1			0.45
Contact Pad Length (X14)	Y1			1.45
Distance Between Pads	G	0.20		

Notes:

1. Dimensioning and tolerancing per ASME Y14.5M

BSC: Basic Dimension. Theoretically exact value shown without tolerances.

Microchip Technology Drawing No. C04-2087A

16-Lead Plastic Quad Flat, No Lead Package (ML) – 4x4x0.9 mm Body [QFN]

Note: For the most current package drawings, please see the Microchip Packaging Specification located at http://www.microchip.com/packaging

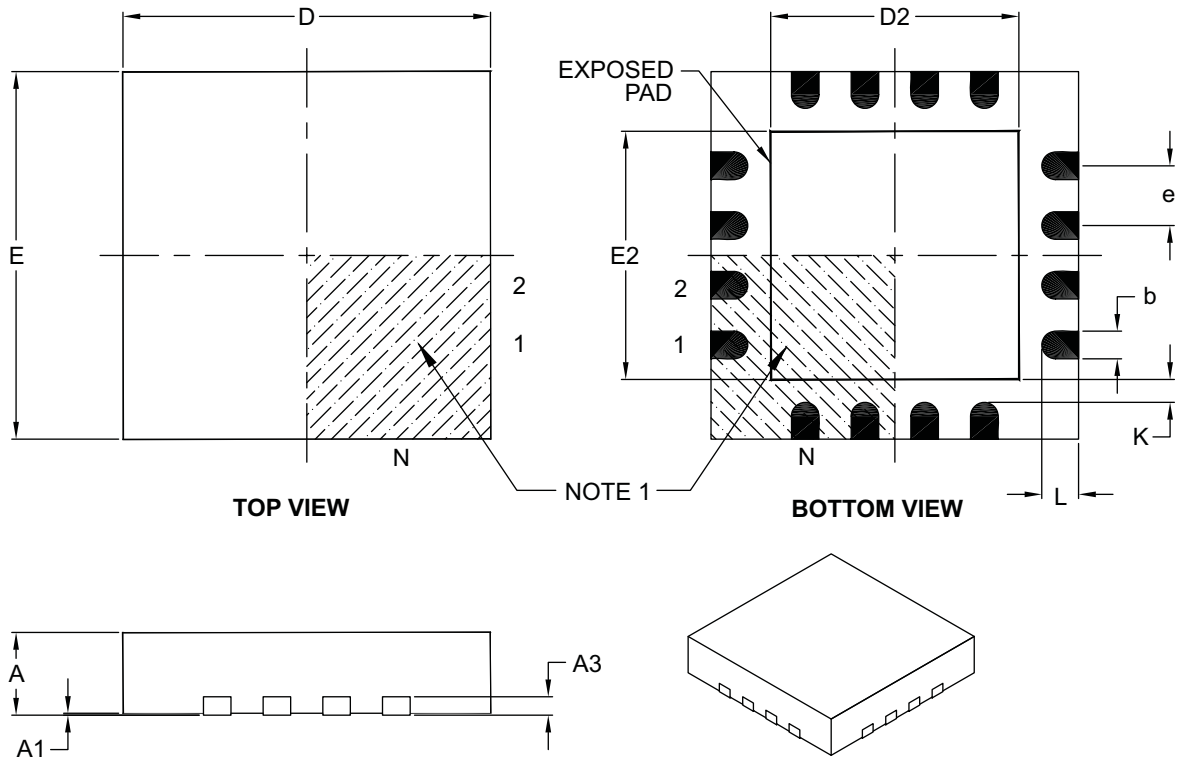

Units		MILLIMETERS		
Dimension Limits		MIN	NOM	MAX
Number of Pins	N		16	
Pitch	e		0.65 BSC	
Overall Height	A	0.80	0.90	1.00
Standoff	A1	0.00	0.02	0.05
Contact Thickness	A3		0.20 REF	
Overall Width	E		4.00 BSC	
Exposed Pad Width	E2	2.50	2.65	2.80
Overall Length	D		4.00 BSC	
Exposed Pad Length	D2	2.50	2.65	2.80
Contact Width	b	0.25	0.30	0.35
Contact Length	L	0.30	0.40	0.50
Contact-to-Exposed Pad	K	0.20	–	–

Notes:

1. Pin 1 visual index feature may vary, but must be located within the hatched area.
2. Package is saw singulated.
3. Dimensioning and tolerancing per ASME Y14.5M.

BSC: Basic Dimension. Theoretically exact value shown without tolerances.
REF: Reference Dimension, usually without tolerance, for information purposes only.

Microchip Technology Drawing C04-127B

© 2010-2015 Microchip Technology Inc.

16-Lead Plastic Quad Flat, No Lead Package (ML) - 4x4x0.9mm Body [QFN]

Note: For the most current package drawings, please see the Microchip Packaging Specification located at http://www.microchip.com/packaging

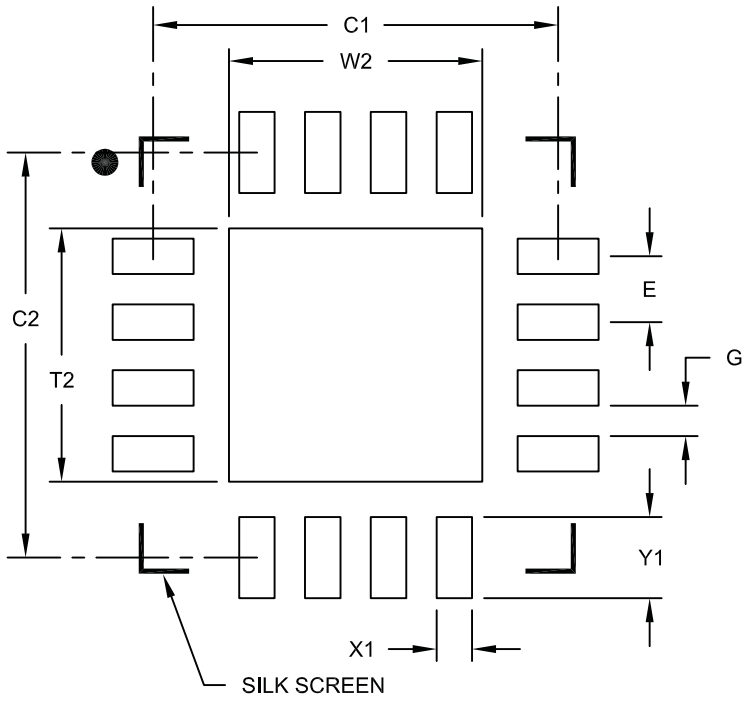

RECOMMENDED LAND PATTERN

Units		MILLIMETERS		
Dimension Limits		MIN	NOM	MAX
Contact Pitch	E	0.65 BSC		
Optional Center Pad Width	W2			2.50
Optional Center Pad Length	T2			2.50
Contact Pad Spacing	C1		4.00	
Contact Pad Spacing	C2		4.00	
Contact Pad Width (X28)	X1			0.35
Contact Pad Length (X28)	Y1			0.80
Distance Between Pads	G	0.30		

Notes:

1. Dimensioning and tolerancing per ASME Y14.5M

BSC: Basic Dimension. Theoretically exact value shown without tolerances.

Microchip Technology Drawing No. C04-2127A

© 2010-2015 Microchip Technology Inc.

16-Lead Ultra Thin Plastic Quad Flat, No Lead Package (JQ) - 4x4x0.5 mm Body [UQFN]

Note: For the most current package drawings, please see the Microchip Packaging Specification located at http://www.microchip.com/packaging

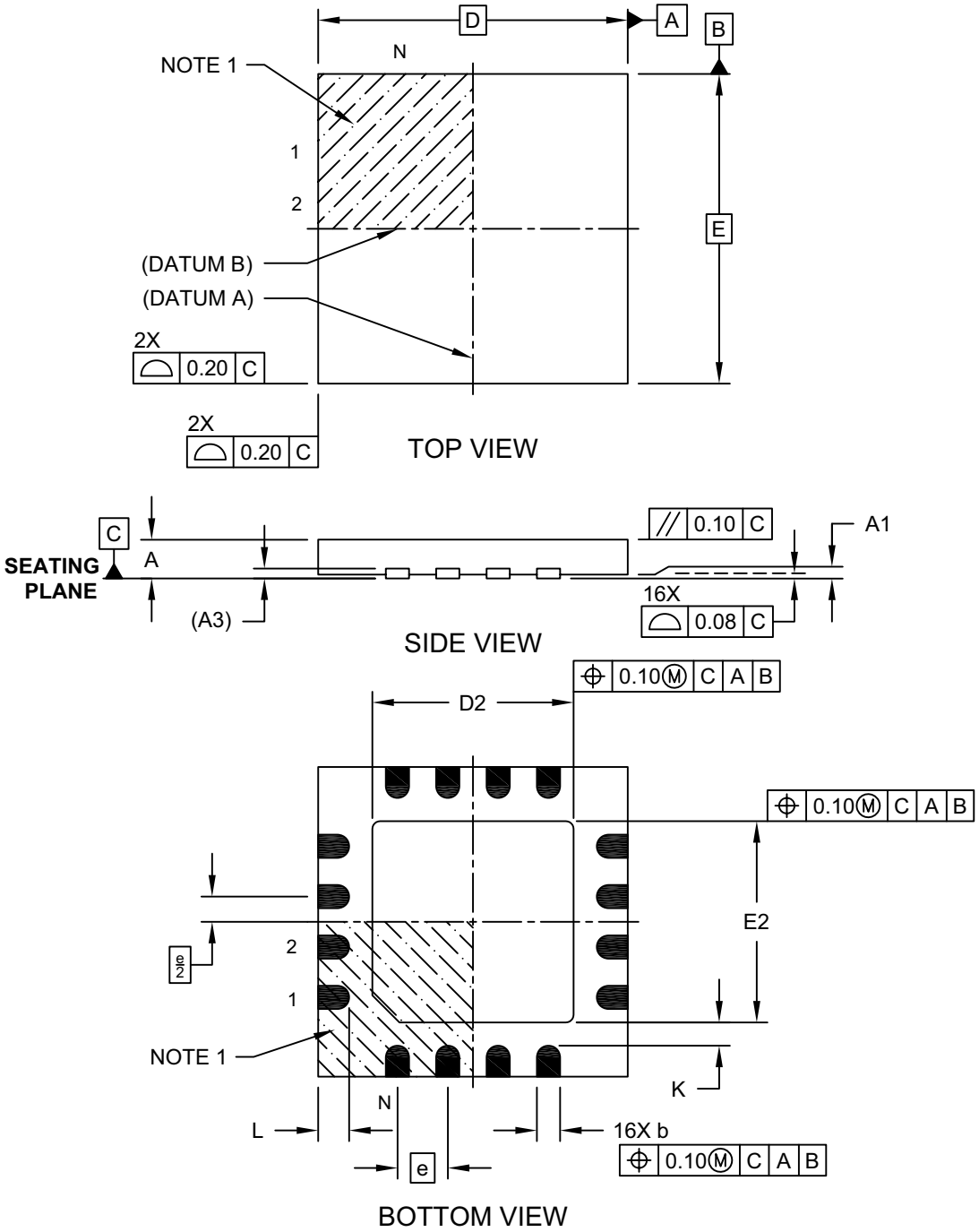

Microchip Technology Drawing C04-257A Sheet 1 of 2

© 2010-2015 Microchip Technology Inc.

16-Lead Ultra Thin Plastic Quad Flat, No Lead Package (JQ) - 4x4x0.5 mm Body [UQFN]

Note: For the most current package drawings, please see the Microchip Packaging Specification located at http://www.microchip.com/packaging

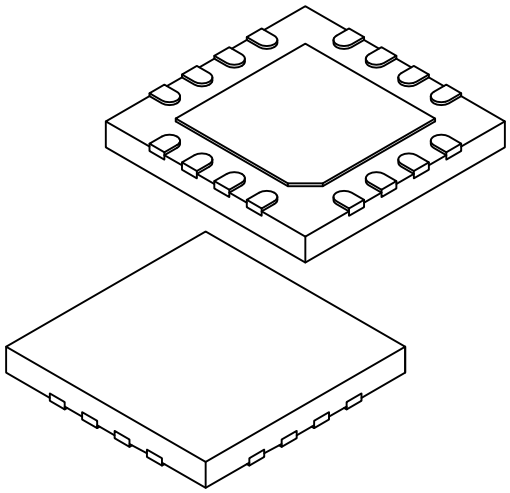

Units		MILLIMETERS		
Dimension Limits		MIN	NOM	MAX
Number of Pins	N		16	
Pitch	e		0.65 BSC	
Overall Height	A	0.45	0.50	0.55
Standoff	A1	0.00	0.02	0.05
Terminal Thickness	A3		0.127 REF	
Overall Width	E		4.00 BSC	
Exposed Pad Width	E2	2.50	2.60	2.70
Overall Length	D		4.00 BSC	
Exposed Pad Length	D2	2.50	2.60	2.70
Terminal Width	b	0.25	0.30	0.35
Terminal Length	L	0.30	0.40	0.50
Terminal-to-Exposed-Pad	K	0.20	-	-

Notes:

1. Pin 1 visual index feature may vary, but must be located within the hatched area.
2. Package is saw singulated
3. Dimensioning and tolerancing per ASME Y14.5M

   BSC: Basic Dimension. Theoretically exact value shown without tolerances.

   REF: Reference Dimension, usually without tolerance, for information purposes only.

Microchip Technology Drawing C04-257A Sheet 2 of 2

16-Lead Ultra Thin Plastic Quad Flat, No Lead Package (JQ) - 4x4x0.5 mm Body [UQFN]

Note: For the most current package drawings, please see the Microchip Packaging Specification located at http://www.microchip.com/packaging

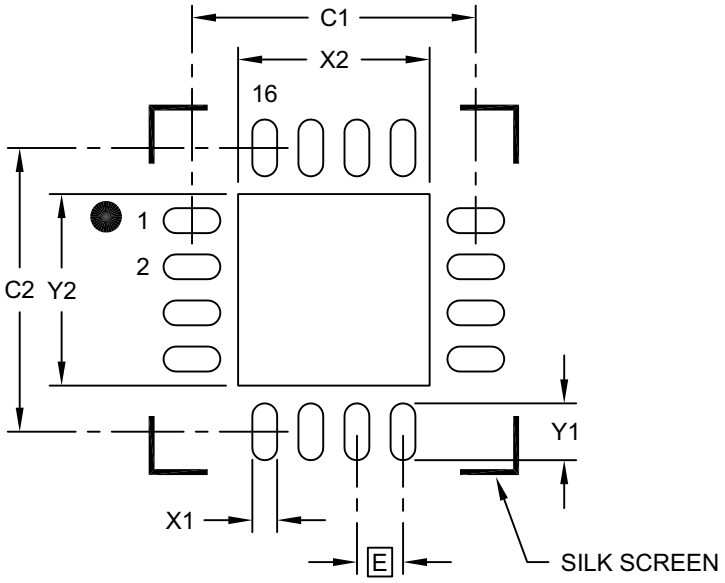

RECOMMENDED LAND PATTERN

Units		MILLIMETERS		
Dimension Limits		MIN	NOM	MAX
Contact Pitch	E		0.65 BSC	
Optional Center Pad Width	X2			2.70
Optional Center Pad Length	Y2			2.70
Contact Pad Spacing	C1		4.00	
Contact Pad Spacing	C2		4.00	
Contact Pad Width (X16)	X1			0.35
Contact Pad Length (X16)	Y1			0.80

Notes:

1. Dimensioning and tolerancing per ASME Y14.5M

BSC: Basic Dimension. Theoretically exact value shown without tolerances.

Microchip Technology Drawing C04-2257A

© 2010-2015 Microchip Technology Inc.

20-Lead Plastic Dual In-Line (P) – 300 mil Body [PDIP]

Note: For the most current package drawings, please see the Microchip Packaging Specification located at http://www.microchip.com/packaging

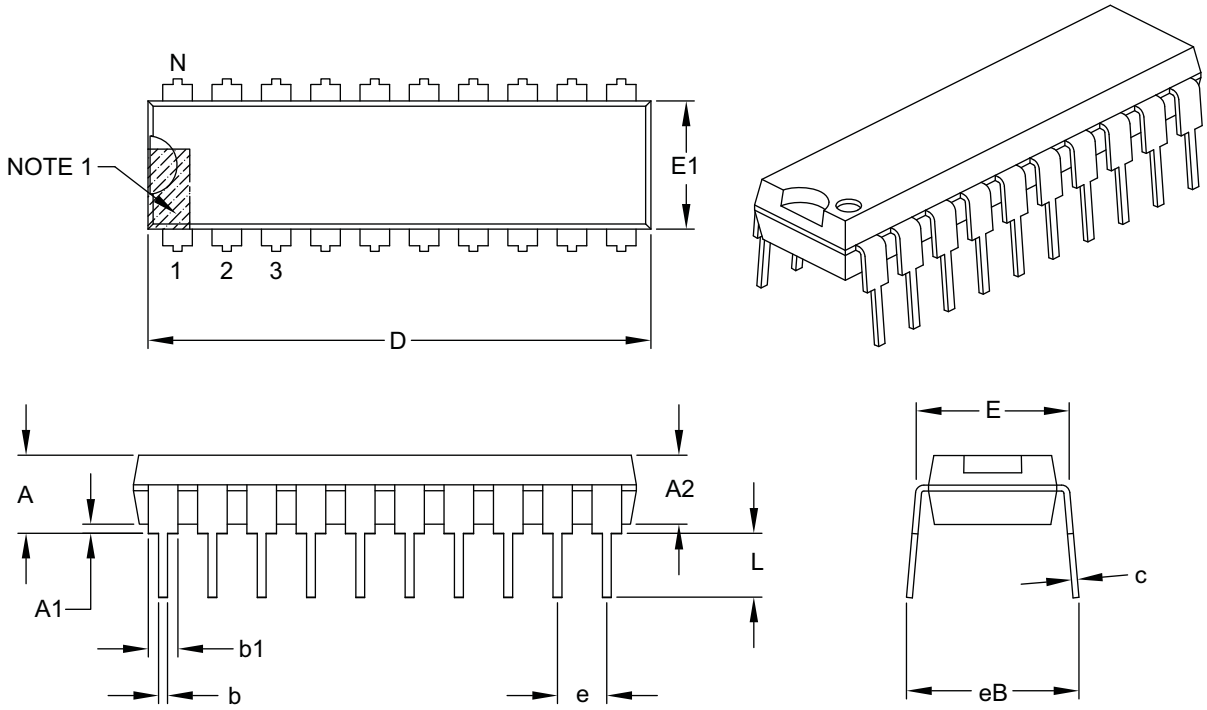

Units		INCHES		
Dimension Limits		MIN	NOM	MAX
Number of Pins	N		20	
Pitch	e		.100 BSC	
Top to Seating Plane	A	–	–	.210
Molded Package Thickness	A2	.115	.130	.195
Base to Seating Plane	A1	.015	–	–
Shoulder to Shoulder Width	E	.300	.310	.325
Molded Package Width	E1	.240	.250	.280
Overall Length	D	.980	1.030	1.060
Tip to Seating Plane	L	.115	.130	.150
Lead Thickness	c	.008	.010	.015
Upper Lead Width	b1	.045	.060	.070
Lower Lead Width	b	.014	.018	.022
Overall Row Spacing §	eB	–	–	.430

Notes:

1. Pin 1 visual index feature may vary, but must be located within the hatched area.
2. § Significant Characteristic.
3. Dimensions D and E1 do not include mold flash or protrusions. Mold flash or protrusions shall not exceed .010" per side.
4. Dimensioning and tolerancing per ASME Y14.5M.

   BSC: Basic Dimension. Theoretically exact value shown without tolerances.

Microchip Technology Drawing C04-019B

20-Lead Plastic Small Outline (SO) - Wide, 7.50 mm Body [SOIC]

Note: For the most current package drawings, please see the Microchip Packaging Specification located at http://www.microchip.com/packaging

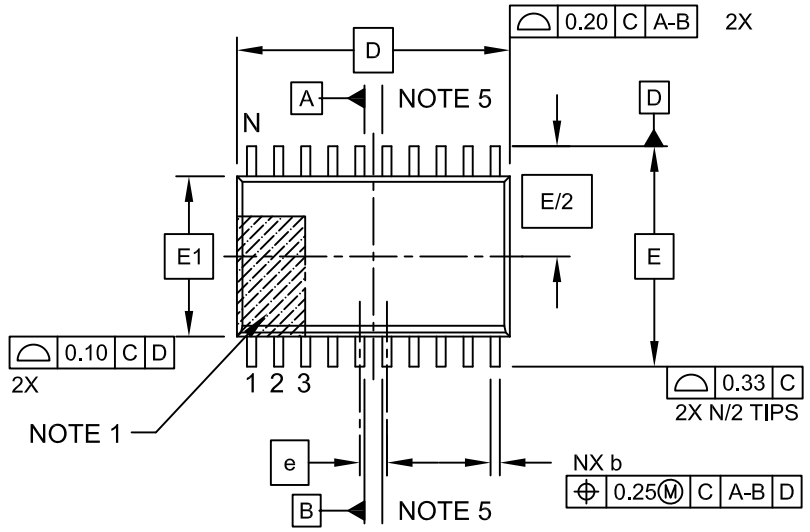

TOP VIEW

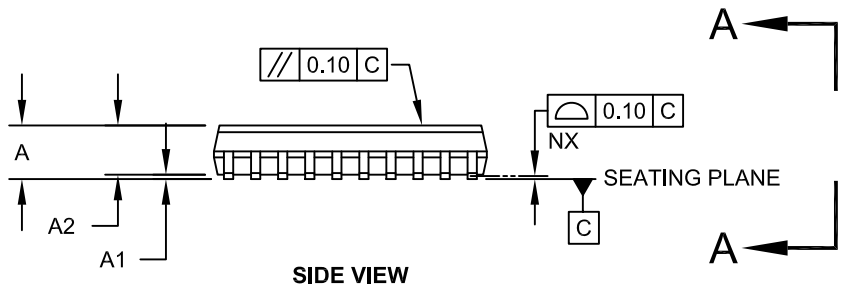

SIDE VIEW

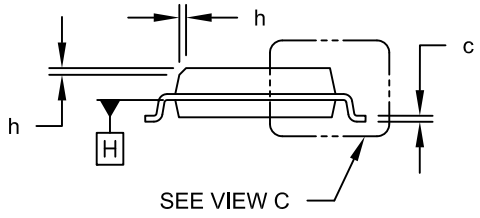

VIEW A-A

Microchip Technology Drawing C04-094C Sheet 1 of 2

© 2010-2015 Microchip Technology Inc.

20-Lead Plastic Small Outline (SO) - Wide, 7.50 mm Body [SOIC]

Note: For the most current package drawings, please see the Microchip Packaging Specification located at http://www.microchip.com/packaging

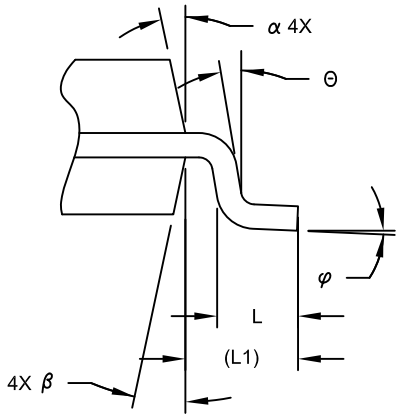

VIEW C

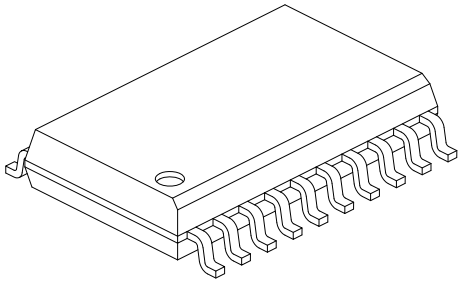

Units		MILLIMETERS		
Dimension Limits		MIN	NOM	MAX
Number of Pins	N		20	
Pitch	e		1.27 BSC	
Overall Height	A	-	-	2.65
Molded Package Thickness	A2	2.05	-	-
Standoff §	A1	0.10	-	0.30
Overall Width	E		10.30 BSC	
Molded Package Width	E1		7.50 BSC	
Overall Length	D		12.80 BSC	
Chamfer (Optional)	h	0.25	-	0.75
Foot Length	L	0.40	-	1.27
Footprint	L1		1.40 REF	
Lead Angle	Θ	0°	-	-
Foot Angle	φ	0°	-	8°
Lead Thickness	c	0.20	-	0.33
Lead Width	b	0.31	-	0.51
Mold Draft Angle Top	α	5°	-	15°
Mold Draft Angle Bottom	β	5°	-	15°

Notes:

1. Pin 1 visual index feature may vary, but must be located within the hatched area.
2. § Significant Characteristic
3. Dimension D does not include mold flash, protrusions or gate burrs, which shall not exceed 0.15 mm per end. Dimension E1 does not include interlead flash or protrusion, which shall not exceed 0.25 mm per side.
4. Dimensioning and tolerancing per ASME Y14.5M

   BSC: Basic Dimension. Theoretically exact value shown without tolerances.

   REF: Reference Dimension, usually without tolerance, for information purposes only.
5. Datums A & B to be determined at Datum H.

Microchip Technology Drawing No. C04-094C Sheet 2 of 2

20-Lead Plastic Small Outline (SO) - Wide, 7.50 mm Body [SOIC]

Note: For the most current package drawings, please see the Microchip Packaging Specification located at http://www.microchip.com/packaging

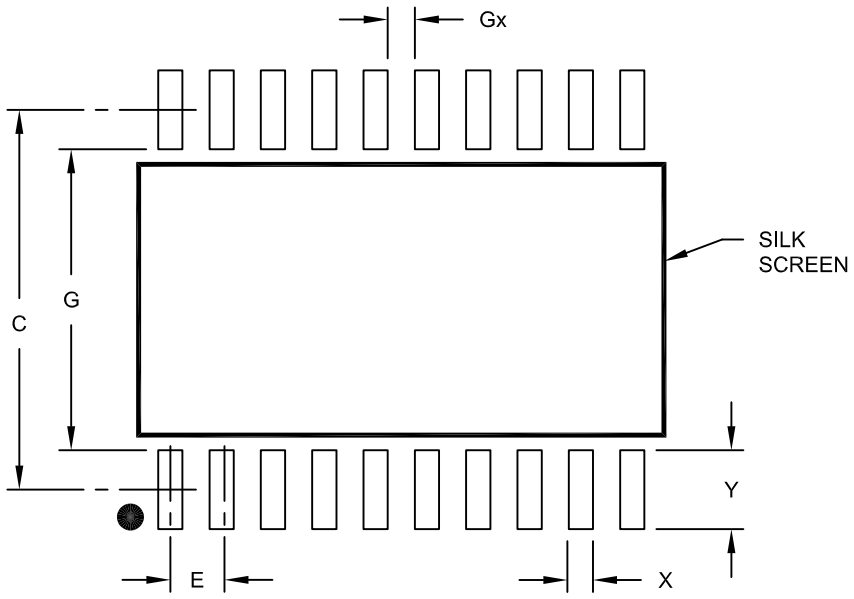

RECOMMENDED LAND PATTERN

Units		MILLIMETERS		
Dimension Limits		MIN	NOM	MAX
Contact Pitch	E		1.27 BSC	
Contact Pad Spacing	C		9.40	
Contact Pad Width (X20)	X			0.60
Contact Pad Length (X20)	Y			1.95
Distance Between Pads	Gx	0.67		
Distance Between Pads	G	7.45		

Notes:

1. Dimensioning and tolerancing per ASME Y14.5M

BSC: Basic Dimension. Theoretically exact value shown without tolerances.

Microchip Technology Drawing No. C04-2094A

© 2010-2015 Microchip Technology Inc.

20-Lead Plastic Shrink Small Outline (SS) – 5.30 mm Body [SSOP]

Note: For the most current package drawings, please see the Microchip Packaging Specification located at http://www.microchip.com/packaging

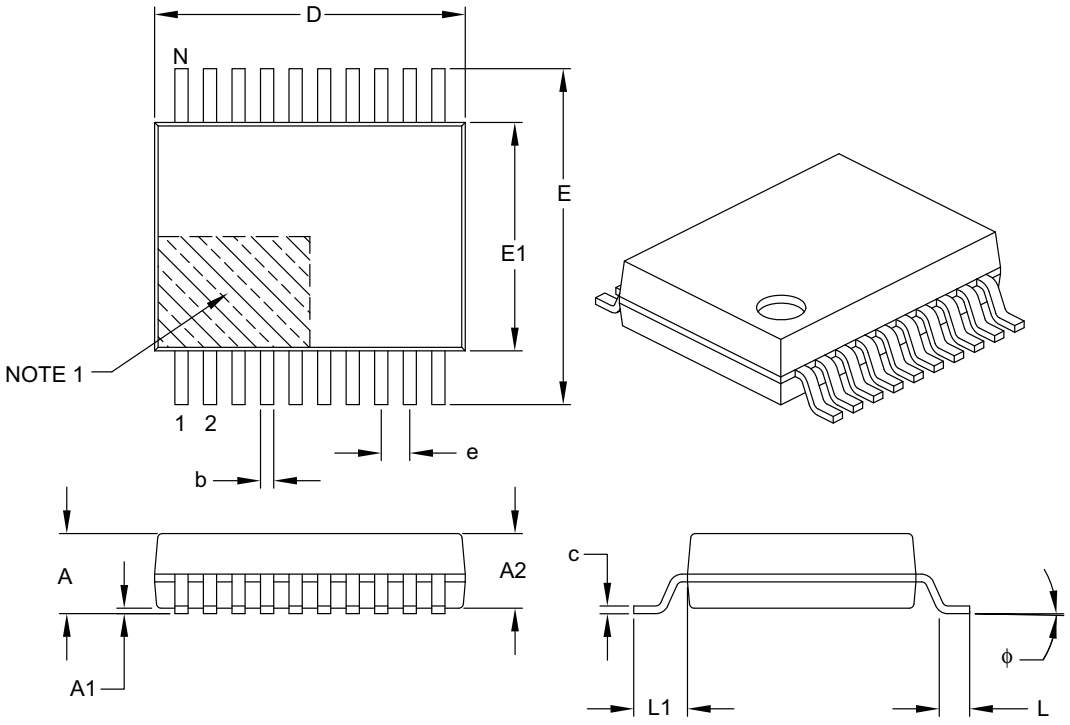

Units		MILLIMETERS		
Dimension Limits		MIN	NOM	MAX
Number of Pins	N		20	
Pitch	e		0.65 BSC	
Overall Height	A	–	–	2.00
Molded Package Thickness	A2	1.65	1.75	1.85
Standoff	A1	0.05	–	–
Overall Width	E	7.40	7.80	8.20
Molded Package Width	E1	5.00	5.30	5.60
Overall Length	D	6.90	7.20	7.50
Foot Length	L	0.55	0.75	0.95
Footprint	L1		1.25 REF	
Lead Thickness	c	0.09	–	0.25
Foot Angle	ϕ	0°	4°	8°
Lead Width	b	0.22	–	0.38

Notes:

1. Pin 1 visual index feature may vary, but must be located within the hatched area.
2. Dimensions D and E1 do not include mold flash or protrusions. Mold flash or protrusions shall not exceed 0.20 mm per side.
3. Dimensioning and tolerancing per ASME Y14.5M.

   BSC: Basic Dimension. Theoretically exact value shown without tolerances.

   REF: Reference Dimension, usually without tolerance, for information purposes only.

Microchip Technology Drawing C04-072B

20-Lead Plastic Shrink Small Outline (SS) - 5.30 mm Body [SSOP]

Note: For the most current package drawings, please see the Microchip Packaging Specification located at http://www.microchip.com/packaging

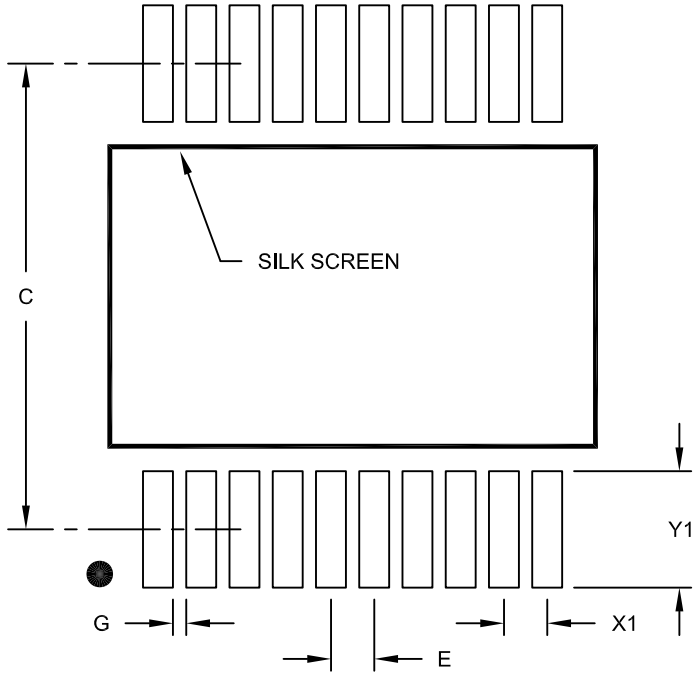

RECOMMENDED LAND PATTERN

Units		MILLIMETERS		
Dimension Limits		MIN	NOM	MAX
Contact Pitch	E	0.65 BSC		
Contact Pad Spacing	C		7.20	
Contact Pad Width (X20)	X1			0.45
Contact Pad Length (X20)	Y1			1.75
Distance Between Pads	G	0.20		

Notes:

1. Dimensioning and tolerancing per ASME Y14.5M

BSC: Basic Dimension. Theoretically exact value shown without tolerances.

Microchip Technology Drawing No. C04-2072A

© 2010-2015 Microchip Technology Inc.

20-Lead Plastic Quad Flat, No Lead Package (ML) – 4x4x0.9 mm Body [QFN]

Note: For the most current package drawings, please see the Microchip Packaging Specification located at http://www.microchip.com/packaging

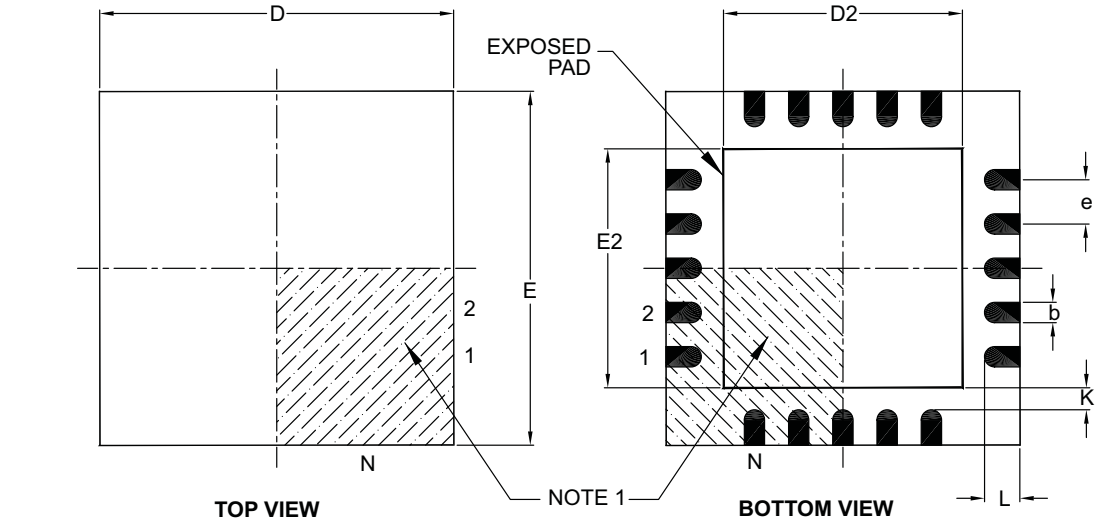

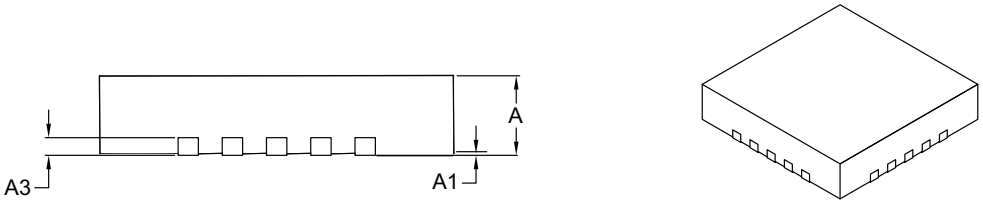

Units		MILLIMETERS		
Dimension Limits		MIN	NOM	MAX
Number of Pins	N		20	
Pitch	e		0.50 BSC	
Overall Height	A	0.80	0.90	1.00
Standoff	A1	0.00	0.02	0.05
Contact Thickness	A3		0.20 REF	
Overall Width	E		4.00 BSC	
Exposed Pad Width	E2	2.60	2.70	2.80
Overall Length	D		4.00 BSC	
Exposed Pad Length	D2	2.60	2.70	2.80
Contact Width	b	0.18	0.25	0.30
Contact Length	L	0.30	0.40	0.50
Contact-to-Exposed Pad	K	0.20	–	–

Notes:

1. Pin 1 visual index feature may vary, but must be located within the hatched area.
2. Package is saw singulated.
3. Dimensioning and tolerancing per ASME Y14.5M.

BSC: Basic Dimension. Theoretically exact value shown without tolerances.
REF: Reference Dimension, usually without tolerance, for information purposes only.

Microchip Technology Drawing C04-126B

20-Lead Plastic Quad Flat, No Lead Package (ML) - 4x4 mm Body [QFN]
With 0.40 mm Contact Length

Note: For the most current package drawings, please see the Microchip Packaging Specification located at http://www.microchip.com/packaging

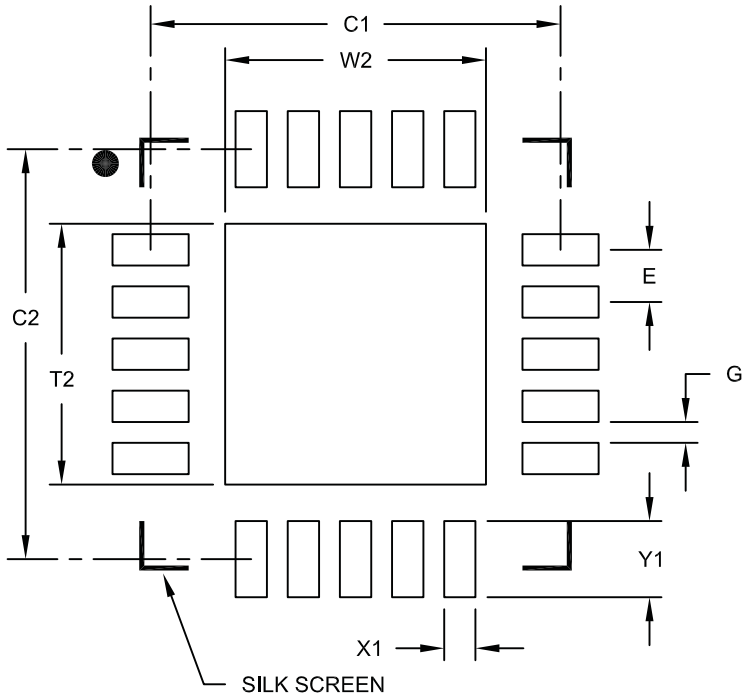

RECOMMENDED LAND PATTERN

Units		MILLIMETERS		
Dimension Limits		MIN	NOM	MAX
Contact Pitch	E		0.50 BSC	
Optional Center Pad Width	W2			2.50
Optional Center Pad Length	T2			2.50
Contact Pad Spacing	C1		3.93	
Contact Pad Spacing	C2		3.93	
Contact Pad Width	X1			0.30
Contact Pad Length	Y1			0.73
Distance Between Pads	G	0.20		

Notes:

1. Dimensioning and tolerancing per ASME Y14.5M

BSC: Basic Dimension. Theoretically exact value shown without tolerances.

Microchip Technology Drawing No. C04-2126A

© 2010-2015 Microchip Technology Inc.

20-Lead Ultra Thin Plastic Quad Flat, No Lead Package (GZ) - 4x4x0.5 mm Body [UQFN]

Note:	For the most current package drawings, please see the Microchip Packaging Specification located at http://www.microchip.com/packaging

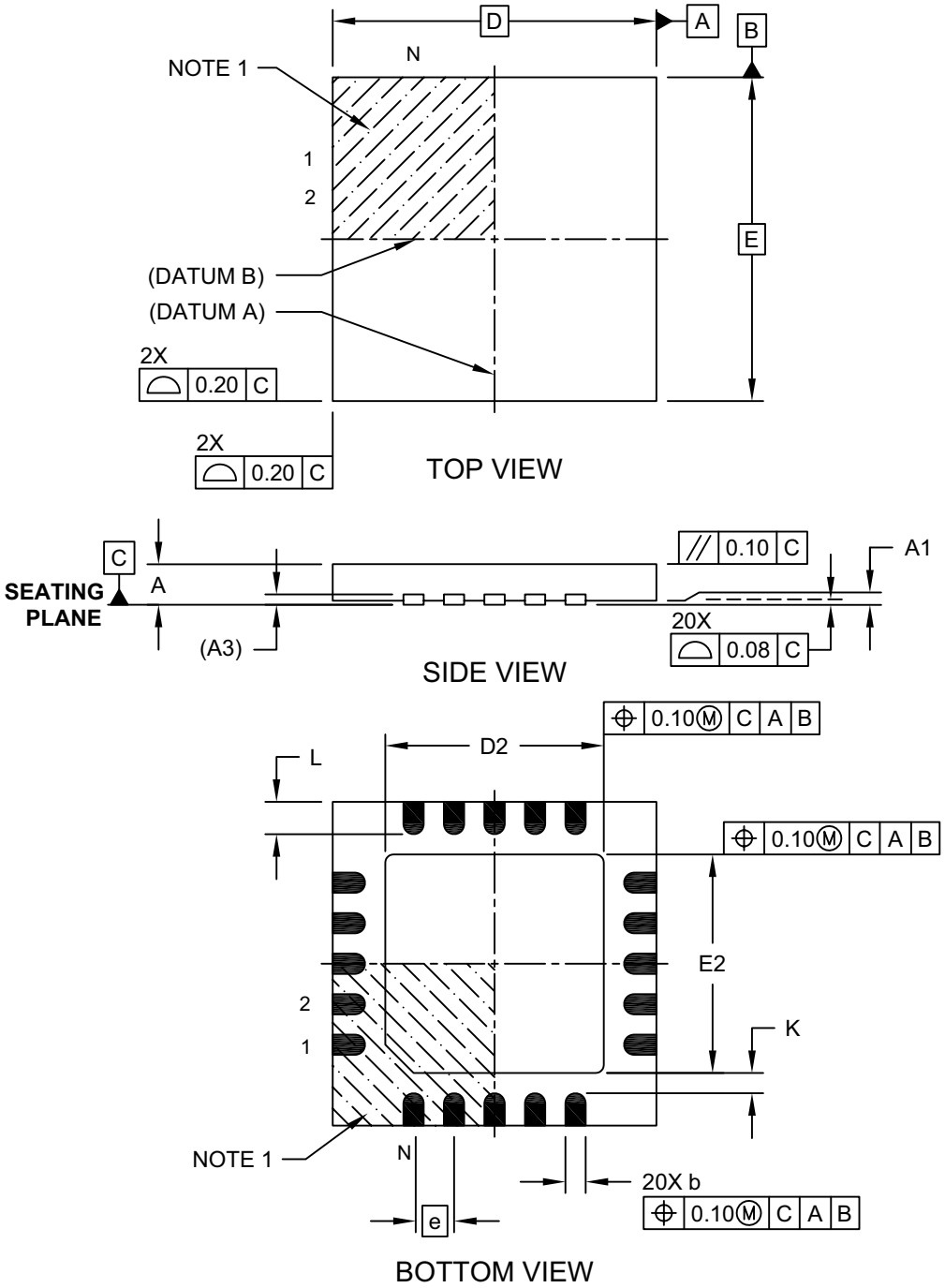

Microchip Technology Drawing C04-255A Sheet 1 of 2

20-Lead Ultra Thin Plastic Quad Flat, No Lead Package (GZ) - 4x4x0.5 mm Body [UQFN]

Note: For the most current package drawings, please see the Microchip Packaging Specification located at http://www.microchip.com/packaging

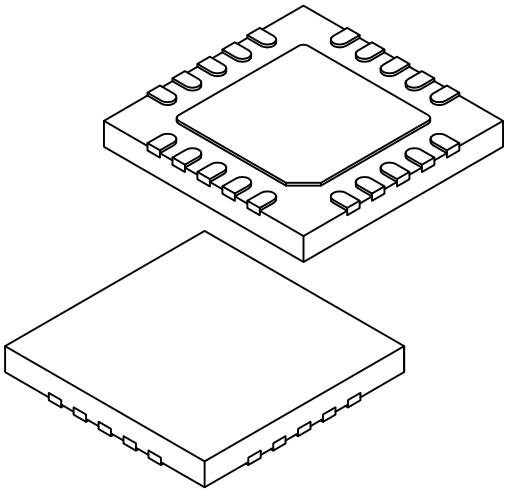

Units		MILLIMETERS		
Dimension Limits		MIN	NOM	MAX
Number of Terminals	N		20	
Pitch	e		0.50 BSC	
Overall Height	A	0.45	0.50	0.55
Standoff	A1	0.00	0.02	0.05
Terminal Thickness	A3		0.127 REF	
Overall Width	E		4.00 BSC	
Exposed Pad Width	E2	2.60	2.70	2.80
Overall Length	D		4.00 BSC	
Exposed Pad Length	D2	2.60	2.70	2.80
Terminal Width	b	0.20	0.25	0.30
Terminal Length	L	0.30	0.40	0.50
Terminal-to-Exposed-Pad	K	0.20	-	-

Notes:

1. Pin 1 visual index feature may vary, but must be located within the hatched area.
2. Package is saw singulated
3. Dimensioning and tolerancing per ASME Y14.5M

   BSC: Basic Dimension. Theoretically exact value shown without tolerances.

   REF: Reference Dimension, usually without tolerance, for information purposes only.

Microchip Technology Drawing C04-255A Sheet 2 of 2

© 2010-2015 Microchip Technology Inc.

20-Lead Ultra Thin Plastic Quad Flat, No Lead Package (GZ) - 4x4x0.5 mm Body [UQFN]

Note: For the most current package drawings, please see the Microchip Packaging Specification located at http://www.microchip.com/packaging

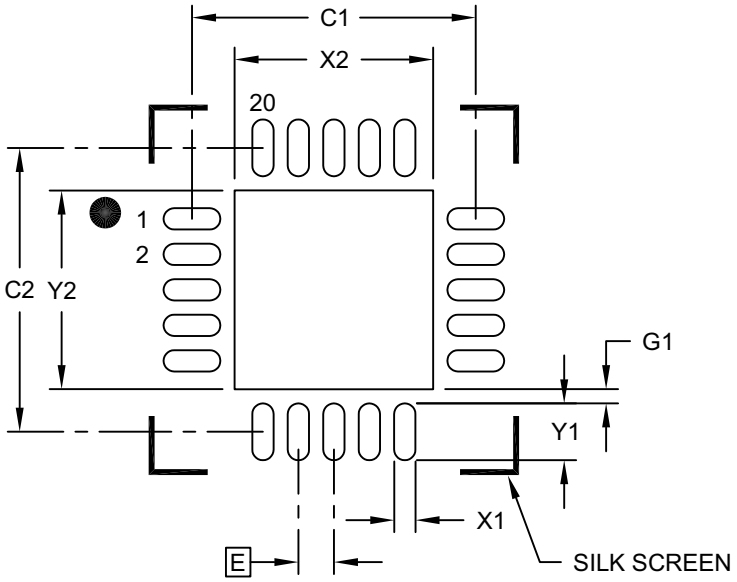

RECOMMENDED LAND PATTERN

Units		MILLIMETERS		
Dimension Limits		MIN	NOM	MAX
Contact Pitch	E		0.50 BSC	
Optional Center Pad Width	X2			2.80
Optional Center Pad Length	Y2			2.80
Contact Pad Spacing	C1		4.00	
Contact Pad Spacing	C2		4.00	
Contact Pad Width (X20)	X1			0.30
Contact Pad Length (X20)	Y1			0.80
Contact Pad to Center Pad (X20)	G1	0.20		

Notes:

1. Dimensioning and tolerancing per ASME Y14.5M

BSC: Basic Dimension. Theoretically exact value shown without tolerances.

Microchip Technology Drawing C04-2255A

APPENDIX A: DATA SHEET REVISION HISTORY

Revision A (06/2010)

Original release.

Revision B (12/2010)

Updated the data sheet to new format; Updated the Electrical Specifications section; Revised Sections 24.2 and 24.3.1; Updated Figure 8-2; Revised the Product Identification System section; Added the Temperature Indicator section.

Revision C (09/2011)

Updated Table 3-3 and Register 20-1.

Revision D (07/2012)

Updated the Family Types Table; Updated Figures 1, 2, 3 and 4; Removed CCPTMRS1; Updated Table 3-9; Updated Register 4-2; Updated Sections 5.2.1.3 and 5.5.3; Added Note below Section 5.4.1; Updated Note 1 in Table 7-1; Updated Register 14-1, Figure 16-1, Register 16-1, Equation 16-1, Register 12-20, Register 24-1 and Register 24-3; Updated the Capacitive Sensing (CPS) Module section; Updated the Electrical Specifications section; Added charts to the DC and AC Characteristics Graphs and Charts section; Updated the Product Identification System section; Updated the Packaging Information section; Other minor corrections.

Revision E (05/2014)

Added new UQFN packages: 16-Lead, UQFN, 4x4x0.5, (JQ) and 20-Lead, UQFN, 4x4x0.5, (GZ) packages. Minor edits.

Revision F (4/2015)

Added Section 30.9: High Temperature Operation in the Electrical Specifications section.

APPENDIX B: MIGRATING FROM OTHER PIC® DEVICES

This section provides comparisons when migrating from other similar PIC® devices to the PIC16(L)F1824/8 family of devices.

B.1 PIC16F648A to PIC16(L)F1828

TABLE B-1: FEATURE COMPARISON

Feature	PIC16F648A	PIC16(L)F1828
Max. Operating Speed	20 MHz	32 MHz
Max. Program Memory (Words)	4K	4K
Max. SRAM (Bytes)	256	256
Max. EEPROM (Bytes)	256	256
A/D Resolution	10-bit	10-bit
Timers (8/16-bit)	2/1	4/1
Brown-out Reset	Y	Y
Internal Pull-ups	RB<7:0>	RA<7:0> RB<7:4>(1)
Interrupt-on-change	RB<7:4>	RA<5:0>, Edge Selectable RB<7:4>(1)
Comparator	2	2
AUSART/EUSART	1/0	0/1
Extended WDT	N	Y
Software Control Option of WDT/BOR	N	Y
INTOSC Frequencies	48 kHz or 4 MHz	31 kHz - 32 MHz
Clock Switching	Y	Y
Capacitive Sensing	N	Y
CCP/ECCP	2/0	2/2
Enhanced PIC16 CPU	N	Y
MSSPx/SSPx	0	1/0
Reference Clock	N	Y
Data Signal Modulator	N	Y
SR Latch	N	Y
Voltage Reference	N	Y
DAC	Y	Y

Note 1: PIC16(L)F1828 only.

© 2010-2015 Microchip Technology Inc.

Note 1: This device has been designed to perform to the parameters of its data sheet. It has been tested to an electrical specification designed to determine its conformance with these parameters. Due to process differences in the manufacture of this device, this device may have different performance characteristics than its earlier version. These differences may cause this device to perform differently in your application than the earlier version of this device.

Note 1: The user should verify that the device oscillator starts and performs as expected. Adjusting the loading capacitor values and/or the oscillator mode may be required.

THE MICROCHIP WEB SITE

Microchip provides online support via our web site at www.microchip.com. This web site is used as a means to make files and information easily available to customers. Accessible by using your favorite Internet browser, the web site contains the following information:

- **Product Support** – Data sheets and errata, application notes and sample programs, design resources, user's guides and hardware support documents, latest software releases and archived software
- **General Technical Support** – Frequently Asked Questions (FAQ), technical support requests, online discussion groups, Microchip consultant program member listing
- **Business of Microchip** – Product selector and ordering guides, latest Microchip press releases, listing of seminars and events, listings of Microchip sales offices, distributors and factory representatives

CUSTOMER CHANGE NOTIFICATION SERVICE

Microchip's customer notification service helps keep customers current on Microchip products. Subscribers will receive e-mail notification whenever there are changes, updates, revisions or errata related to a specified product family or development tool of interest.

To register, access the Microchip web site at www.microchip.com. Under "Support", click on "Customer Change Notification" and follow the registration instructions.

CUSTOMER SUPPORT

Users of Microchip products can receive assistance through several channels:

- Distributor or Representative
- Local Sales Office
- Field Application Engineer (FAE)
- Technical Support

Customers should contact their distributor, representative or Field Application Engineer (FAE) for support. Local sales offices are also available to help customers. A listing of sales offices and locations is included in the back of this document.

Technical support is available through the web site at: http://www.microchip.com/support

© 2010-2015 Microchip Technology Inc.

PRODUCT IDENTIFICATION SYSTEM

To order or obtain information, e.g., on pricing or delivery, refer to the factory or the listed sales office.

PART NO.	[X]	-	X	/XX	XXX
Device	Tape and Reel Option		Temperature Range	Package	Pattern

Device:	PIC16F1824, PIC16LF1824 PIC16F1828, PIC16LF1828
Tape and Reel Option:	Blank = Standard packaging (tube or tray) T = Tape and Reel(1)
Temperature Range:	I = -40°C to +85°C (Industrial) E = -40°C to +125°C (Extended)
Package:(2)	GZ = UQFN, 20-Lead (4x4x0.5mm) JQ = UQFN, 16-Lead (4x4x0.5mm) ML = QFN, 16-Lead, 20-Lead (4x40.9mm) P = Plastic DIP SL = SOIC, 14-Lead SO = SOIC, 20-Lead SS = SSOP, 20-Lead ST = TSSOP, 14-Lead
Pattern:	QTP, SQTP, Code or Special Requirements (blank otherwise)

Examples:

a) PIC16LF1828 - E/ML 301 = Extended temp., QFN package, QTP pattern #301.

b) PIC16F1828 - E/P = Extended temp., PDIP package.

c) PIC16LF1824 - E/SL= Extended temp., SOIC package.

Note 1: Tape and Reel identifier only appears in the catalog part number description. This identifier is used for ordering purposes and is not printed on the device package. Check with your Microchip Sales Office for package availability with the Tape and Reel option.

2: For other small form-factor package availability and marking information, please visit www.microchip.com/packaging or contact your local sales office.

Note the following details of the code protection feature on Microchip devices:

- Microchip products meet the specification contained in their particular Microchip Data Sheet.
- Microchip believes that its family of products is one of the most secure families of its kind on the market today, when used in the intended manner and under normal conditions.
- There are dishonest and possibly illegal methods used to breach the code protection feature. All of these methods, to our knowledge, require using the Microchip products in a manner outside the operating specifications contained in Microchip's Data Sheets. Most likely, the person doing so is engaged in theft of intellectual property.
- Microchip is willing to work with the customer who is concerned about the integrity of their code.
- Neither Microchip nor any other semiconductor manufacturer can guarantee the security of their code. Code protection does not mean that we are guaranteeing the product as "unbreakable."

Code protection is constantly evolving. We at Microchip are committed to continuously improving the code protection features of our products. Attempts to break Microchip's code protection feature may be a violation of the Digital Millennium Copyright Act. If such acts allow unauthorized access to your software or other copyrighted work, you may have a right to sue for relief under that Act.

Information contained in this publication regarding device applications and the like is provided only for your convenience and may be superseded by updates. It is your responsibility to ensure that your application meets with your specifications. MICROCHIP MAKES NO REPRESENTATIONS OR WARRANTIES OF ANY KIND WHETHER EXPRESS OR IMPLIED, WRITTEN OR ORAL, STATUTORY OR OTHERWISE, RELATED TO THE INFORMATION, INCLUDING BUT NOT LIMITED TO ITS CONDITION, QUALITY, PERFORMANCE, MERCHANTABILITY OR FITNESS FOR PURPOSE**.** Microchip disclaims all liability arising from this information and its use. Use of Microchip devices in life support and/or safety applications is entirely at the buyer's risk, and the buyer agrees to defend, indemnify and hold harmless Microchip from any and all damages, claims, suits, or expenses resulting from such use. No licenses are conveyed, implicitly or otherwise, under any Microchip intellectual property rights.

Trademarks

The Microchip name and logo, the Microchip logo, dsPIC, FlashFlex, flexPWR, JukeBlox, KEELOQ, KEELOQ logo, Kleer, LANCheck, MediaLB, MOST, MOST logo, MPLAB, OptoLyzer, PIC, PICSTART, PIC^{32} logo, RightTouch, SpyNIC, SST, SST Logo, SuperFlash and UNI/O are registered trademarks of Microchip Technology Incorporated in the U.S.A. and other countries.

The Embedded Control Solutions Company and mTouch are registered trademarks of Microchip Technology Incorporated in the U.S.A.

Analog-for-the-Digital Age, BodyCom, chipKIT, chipKIT logo, CodeGuard, dsPICDEM, dsPICDEM.net, ECAN, In-Circuit Serial Programming, ICSP, Inter-Chip Connectivity, KleerNet, KleerNet logo, MiWi, MPASM, MPF, MPLAB Certified logo, MPLIB, MPLINK, MultiTRAK, NetDetach, Omniscient Code Generation, PICDEM, PICDEM.net, PICkit, PICtail, RightTouch logo, REAL ICE, SQI, Serial Quad I/O, Total Endurance, TSHARC, USBCheck, VariSense, ViewSpan, WiperLock, Wireless DNA, and ZENA are trademarks of Microchip Technology Incorporated in the U.S.A. and other countries.

SQTP is a service mark of Microchip Technology Incorporated in the U.S.A.

Silicon Storage Technology is a registered trademark of Microchip Technology Inc. in other countries.

GestIC is a registered trademarks of Microchip Technology Germany II GmbH & Co. KG, a subsidiary of Microchip Technology Inc., in other countries.

All other trademarks mentioned herein are property of their respective companies.

© 2010-2015, Microchip Technology Incorporated, Printed in the U.S.A., All Rights Reserved.

ISBN: 978-1-63277-252-7

QUALITY MANAGEMENT SYSTEM
CERTIFIED BY DNV
═ ISO/TS 16949 ═

Microchip received ISO/TS-16949:2009 certification for its worldwide headquarters, design and wafer fabrication facilities in Chandler and Tempe, Arizona; Gresham, Oregon and design centers in California and India. The Company's quality system processes and procedures are for its PIC® MCUs and dsPIC® DSCs, KEELOQ® code hopping devices, Serial EEPROMs, microperipherals, nonvolatile memory and analog products. In addition, Microchip's quality system for the design and manufacture of development systems is ISO 9001:2000 certified.

© 2010-2015 Microchip Technology Inc.

Worldwide Sales and Service

AMERICAS

Corporate Office
2355 West Chandler Blvd.
Chandler, AZ 85224-6199
Tel: 480-792-7200
Fax: 480-792-7277
Technical Support:
http://www.microchip.com/support
Web Address:
www.microchip.com

Atlanta
Duluth, GA
Tel: 678-957-9614
Fax: 678-957-1455

Austin, TX
Tel: 512-257-3370

Boston
Westborough, MA
Tel: 774-760-0087
Fax: 774-760-0088

Chicago
Itasca, IL
Tel: 630-285-0071
Fax: 630-285-0075

Cleveland
Independence, OH
Tel: 216-447-0464
Fax: 216-447-0643

Dallas
Addison, TX
Tel: 972-818-7423
Fax: 972-818-2924

Detroit
Novi, MI
Tel: 248-848-4000

Houston, TX
Tel: 281-894-5983

Indianapolis
Noblesville, IN
Tel: 317-773-8323
Fax: 317-773-5453

Los Angeles
Mission Viejo, CA
Tel: 949-462-9523
Fax: 949-462-9608

New York, NY
Tel: 631-435-6000

San Jose, CA
Tel: 408-735-9110

Canada - Toronto
Tel: 905-673-0699
Fax: 905-673-6509

ASIA/PACIFIC

Asia Pacific Office
Suites 3707-14, 37th Floor
Tower 6, The Gateway
Harbour City, Kowloon

Hong Kong
Tel: 852-2943-5100
Fax: 852-2401-3431

Australia - Sydney
Tel: 61-2-9868-6733
Fax: 61-2-9868-6755

China - Beijing
Tel: 86-10-8569-7000
Fax: 86-10-8528-2104

China - Chengdu
Tel: 86-28-8665-5511
Fax: 86-28-8665-7889

China - Chongqing
Tel: 86-23-8980-9588
Fax: 86-23-8980-9500

China - Dongguan
Tel: 86-769-8702-9880

China - Hangzhou
Tel: 86-571-8792-8115
Fax: 86-571-8792-8116

China - Hong Kong SAR
Tel: 852-2943-5100
Fax: 852-2401-3431

China - Nanjing
Tel: 86-25-8473-2460
Fax: 86-25-8473-2470

China - Qingdao
Tel: 86-532-8502-7355
Fax: 86-532-8502-7205

China - Shanghai
Tel: 86-21-5407-5533
Fax: 86-21-5407-5066

China - Shenyang
Tel: 86-24-2334-2829
Fax: 86-24-2334-2393

China - Shenzhen
Tel: 86-755-8864-2200
Fax: 86-755-8203-1760

China - Wuhan
Tel: 86-27-5980-5300
Fax: 86-27-5980-5118

China - Xian
Tel: 86-29-8833-7252
Fax: 86-29-8833-7256

ASIA/PACIFIC

China - Xiamen
Tel: 86-592-2388138
Fax: 86-592-2388130

China - Zhuhai
Tel: 86-756-3210040
Fax: 86-756-3210049

India - Bangalore
Tel: 91-80-3090-4444
Fax: 91-80-3090-4123

India - New Delhi
Tel: 91-11-4160-8631
Fax: 91-11-4160-8632

India - Pune
Tel: 91-20-3019-1500

Japan - Osaka
Tel: 81-6-6152-7160
Fax: 81-6-6152-9310

Japan - Tokyo
Tel: 81-3-6880- 3770
Fax: 81-3-6880-3771

Korea - Daegu
Tel: 82-53-744-4301
Fax: 82-53-744-4302

Korea - Seoul
Tel: 82-2-554-7200
Fax: 82-2-558-5932 or
82-2-558-5934

Malaysia - Kuala Lumpur
Tel: 60-3-6201-9857
Fax: 60-3-6201-9859

Malaysia - Penang
Tel: 60-4-227-8870
Fax: 60-4-227-4068

Philippines - Manila
Tel: 63-2-634-9065
Fax: 63-2-634-9069

Singapore
Tel: 65-6334-8870
Fax: 65-6334-8850

Taiwan - Hsin Chu
Tel: 886-3-5778-366
Fax: 886-3-5770-955

Taiwan - Kaohsiung
Tel: 886-7-213-7828

Taiwan - Taipei
Tel: 886-2-2508-8600
Fax: 886-2-2508-0102

Thailand - Bangkok
Tel: 66-2-694-1351
Fax: 66-2-694-1350

EUROPE

Austria - Wels
Tel: 43-7242-2244-39
Fax: 43-7242-2244-393

Denmark - Copenhagen
Tel: 45-4450-2828
Fax: 45-4485-2829

France - Paris
Tel: 33-1-69-53-63-20
Fax: 33-1-69-30-90-79

Germany - Dusseldorf
Tel: 49-2129-3766400

Germany - Munich
Tel: 49-89-627-144-0
Fax: 49-89-627-144-44

Germany - Pforzheim
Tel: 49-7231-424750

Italy - Milan
Tel: 39-0331-742611
Fax: 39-0331-466781

Italy - Venice
Tel: 39-049-7625286

Netherlands - Drunen
Tel: 31-416-690399
Fax: 31-416-690340

Poland - Warsaw
Tel: 48-22-3325737

Spain - Madrid
Tel: 34-91-708-08-90
Fax: 34-91-708-08-91

Sweden - Stockholm
Tel: 46-8-5090-4654

UK - Wokingham
Tel: 44-118-921-5800
Fax: 44-118-921-5820

01/27/15

© 2010-2015 Microchip Technology Inc.