

PIC12F510/16F506
Data Sheet

8/14-Pin, 8-Bit Flash Microcontrollers

© 2007 Microchip Technology Inc.

Note the following details of the code protection feature on Microchip devices:

- Microchip products meet the specification contained in their particular Microchip Data Sheet.
- Microchip believes that its family of products is one of the most secure families of its kind on the market today, when used in the intended manner and under normal conditions.
- There are dishonest and possibly illegal methods used to breach the code protection feature. All of these methods, to our knowledge, require using the Microchip products in a manner outside the operating specifications contained in Microchip's Data Sheets. Most likely, the person doing so is engaged in theft of intellectual property.
- Microchip is willing to work with the customer who is concerned about the integrity of their code.
- Neither Microchip nor any other semiconductor manufacturer can guarantee the security of their code. Code protection does not mean that we are guaranteeing the product as "unbreakable."

Code protection is constantly evolving. We at Microchip are committed to continuously improving the code protection features of our products. Attempts to break Microchip's code protection feature may be a violation of the Digital Millennium Copyright Act. If such acts allow unauthorized access to your software or other copyrighted work, you may have a right to sue for relief under that Act.

Information contained in this publication regarding device applications and the like is provided only for your convenience and may be superseded by updates. It is your responsibility to ensure that your application meets with your specifications. MICROCHIP MAKES NO REPRESENTATIONS OR WARRANTIES OF ANY KIND WHETHER EXPRESS OR IMPLIED, WRITTEN OR ORAL, STATUTORY OR OTHERWISE, RELATED TO THE INFORMATION, INCLUDING BUT NOT LIMITED TO ITS CONDITION, QUALITY, PERFORMANCE, MERCHANTABILITY OR FITNESS FOR PURPOSE**.** Microchip disclaims all liability arising from this information and its use. Use of Microchip devices in life support and/or safety applications is entirely at the buyer's risk, and the buyer agrees to defend, indemnify and hold harmless Microchip from any and all damages, claims, suits, or expenses resulting from such use. No licenses are conveyed, implicitly or otherwise, under any Microchip intellectual property rights.

Trademarks

The Microchip name and logo, the Microchip logo, Accuron, dsPIC, KEELOQ, KEELOQ logo, microID, MPLAB, PIC, PICmicro, PICSTART, PRO MATE, rfPIC and SmartShunt are registered trademarks of Microchip Technology Incorporated in the U.S.A. and other countries.

AmpLab, FilterLab, Linear Active Thermistor, Migratable Memory, MXDEV, MXLAB, SEEVAL, SmartSensor and The Embedded Control Solutions Company are registered trademarks of Microchip Technology Incorporated in the U.S.A.

Analog-for-the-Digital Age, Application Maestro, CodeGuard, dsPICDEM, dsPICDEM.net, dsPICworks, dsSPEAK, ECAN, ECONOMONITOR, FanSense, FlexROM, fuzzyLAB, In-Circuit Serial Programming, ICSP, ICEPIC, Mindi, MiWi, MPASM, MPLAB Certified logo, MPLIB, MPLINK, PICkit, PICDEM, PICDEM.net, PICLAB, PICtail, PowerCal, PowerInfo, PowerMate, PowerTool, REAL ICE, rfLAB, Select Mode, Smart Serial, SmartTel, Total Endurance, UNI/O, WiperLock and ZENA are trademarks of Microchip Technology Incorporated in the U.S.A. and other countries.

SQTP is a service mark of Microchip Technology Incorporated in the U.S.A.

All other trademarks mentioned herein are property of their respective companies.

© 2007, Microchip Technology Incorporated, Printed in the U.S.A., All Rights Reserved.

Printed on recycled paper.

QUALITY MANAGEMENT SYSTEM
CERTIFIED BY DNV
ISO/TS 16949:2002

Microchip received ISO/TS-16949:2002 certification for its worldwide headquarters, design and wafer fabrication facilities in Chandler and Tempe, Arizona; Gresham, Oregon and design centers in California and India. The Company's quality system processes and procedures are for its PIC® MCUs and dsPIC® DSCs, KEELOQ® code hopping devices, Serial EEPROMs, microperipherals, nonvolatile memory and analog products. In addition, Microchip's quality system for the design and manufacture of development systems is ISO 9001:2000 certified.

© 2007 Microchip Technology Inc.

PIC12F510/16F506

8/14-Pin, 8-Bit Flash Microcontroller

Devices Included In This Data Sheet:

- PIC16F506
- PIC12F510

High-Performance RISC CPU:

- Only 33 Single-Word Instructions to Learn
- All Single-Cycle Instructions except for Program Branches, which are Two-Cycle
- 12-Bit Wide Instructions
- Two-Level Deep Hardware Stack
- Direct, Indirect and Relative Addressing modes for Data and Instructions
- 8-Bit Wide Data Path
- 10 Special Function Hardware Registers (PIC12F510)
- 13 Special Function Hardware Registers (PIC16F506)
- Operating Speed:
  - DC – 8 MHz Crystal Oscillator (PIC12F510)
  - DC – 500 ns instruction cycle (PIC12F510)
  - DC – 20 MHz Crystal Oscillator (PIC16F506)
  - DC – 200 ns instruction cycle (PIC16F506)

Special Microcontroller Features:

- 4 or 8 MHz Selectable Precision Internal Oscillator:
  - Factory calibrated to ±1%
- In-Circuit Serial Programming™ (ICSP™)
- In-Circuit Debugging (ICD) Support
- Power-on Reset (POR)
- Device Reset Timer (DRT):
  - Short DRT (1.125 ms, typical) for INTOSC, EXTRC and EC
  - DRT (18 ms, typical) for HS, XT and LP
- Watchdog Timer (WDT) with Dedicated On-Chip RC Oscillator for Reliable Operation
- Programmable Code Protection
- Multiplexed $\overline{\text{MCLR}}$ Input Pin
- Selectable Internal Weak Pull-Ups on I/O Pins
- Power-Saving Sleep mode
- Wake-up from Sleep on Pin Change
- Wake-up from Sleep on Comparator Change
- Selectable Oscillator Options:
  - INTOSC: 4/8 MHz precision Internal oscillator
  - EXTRC: External low-cost RC oscillator
  - XT: Standard crystal/resonator
  - LP: Power-saving, low-frequency crystal
  - HS: High-speed crystal/resonator (PIC16F506 only)
  - EC: High-speed external clock input (PIC16F506 only)
- Analog-to-Digital (A/D) Converter:
  - 8-bit resolution
  - 4-input channels (1 channel is dedicated to conversion of the internal 0.6V absolute voltage reference)
- High Current Sink/Source for Direct LED Drive
- 8-Bit Real-Time Clock/Counter (TMR0) with 8-Bit Programmable Prescaler

Low-Power Features/CMOS Technology:

- Operating Current:
  - < 175 μA @ 2V, 4 MHz, typical
- Standby Current:
  - 100 nA @ 2V, typical
- Low-Power, High-Speed Flash Technology:
  - 100,000 cycle Flash endurance
  - > 40-year retention
- Fully Static Design
- Wide Operating Voltage Range: 2.0V to 5.5V
- Wide Temperature Range:
  - Industrial: -40°C to +85°C
  - Extended: -40°C to +125°C

Peripheral Features (PIC12F510):

- 6 I/O Pins:
  - 5 I/O pins with individual direction control
  - 1 input only pin
- 1 Analog Comparator with Absolute Reference

Peripheral Features (PIC16F506):

- 12 I/O Pins:
  - 11 I/O pins with individual direction control
  - 1 input only pin
- 2 Analog Comparators with Absolute Reference and Programmable Reference

© 2007 Microchip Technology Inc.

Device	Program Memory	Data Memory	I/O	Timers 8-bit
	Flash (words)	SRAM (bytes)		
PIC16F506	1024	67	12	1
PIC12F510	1024	38	6	1

Pin Diagrams

PDIP, SOIC and TSSOP

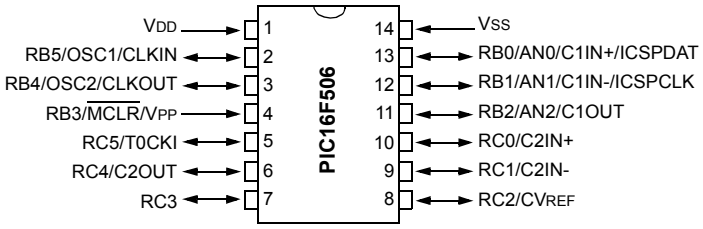

PDIP, SOIC, MSOP

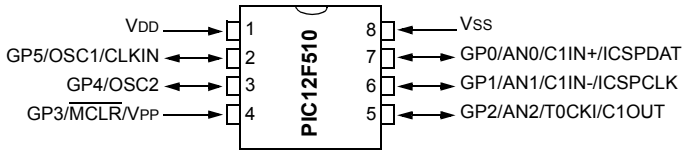

DFN

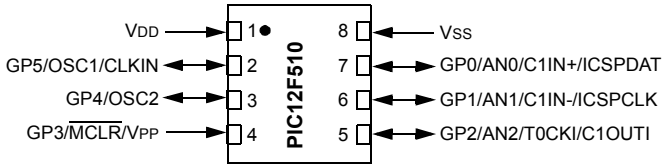

© 2007 Microchip Technology Inc.

Table of Contents

1.0 General Description 5
2.0 PIC12F510/16F506 Device Varieties 7
3.0 Architectural Overview 9
4.0 Memory Organization 15
5.0 I/O Port 27
6.0 TMR0 Module and TMR0 Register 39
7.0 Comparator(s) 43
8.0 Comparator Voltage Reference Module (PIC16F506 only) 49
9.0 Analog-to-Digital (A/D) Converter 51
10.0 Special Features Of The CPU 55
11.0 Instruction Set Summary 71
12.0 Development Support 79
13.0 Electrical Characteristics 83
14.0 DC and AC Characteristics Graphs and Charts 97
15.0 Packaging 105
Index 117
The Microchip Web Site 119
Customer Change Notification Service 119
Customer Support 119
Reader Response 120
Product Identification System 121

TO OUR VALUED CUSTOMERS

It is our intention to provide our valued customers with the best documentation possible to ensure successful use of your Microchip products. To this end, we will continue to improve our publications to better suit your needs. Our publications will be refined and enhanced as new volumes and updates are introduced.

If you have any questions or comments regarding this publication, please contact the Marketing Communications Department via E-mail at **docerrors@microchip.com** or fax the **Reader Response Form** in the back of this data sheet to (480) 792-4150. We welcome your feedback.

Most Current Data Sheet

To obtain the most up-to-date version of this data sheet, please register at our Worldwide Web site at:

http://www.microchip.com

You can determine the version of a data sheet by examining its literature number found on the bottom outside corner of any page. The last character of the literature number is the version number, (e.g., DS30000A is version A of document DS30000).

Errata

An errata sheet, describing minor operational differences from the data sheet and recommended workarounds, may exist for current devices. As device/documentation issues become known to us, we will publish an errata sheet. The errata will specify the revision of silicon and revision of document to which it applies.

To determine if an errata sheet exists for a particular device, please check with one of the following:

- Microchip's Worldwide Web site; http://www.microchip.com
- Your local Microchip sales office (see last page)

When contacting a sales office, please specify which device, revision of silicon and data sheet (include literature number) you are using.

Customer Notification System

Register on our web site at **www.microchip.com** to receive the most current information on all of our products.

NOTES:

© 2007 Microchip Technology Inc.

1.0 GENERAL DESCRIPTION

The PIC12F510/16F506 devices from Microchip Technology are low-cost, high-performance, 8-bit, fully-static, Flash-based CMOS microcontrollers. They employ a RISC architecture with only 33 single-word/single-cycle instructions. All instructions are single-cycle except for program branches, which take two cycles. The PIC12F510/16F506 devices deliver performance in an order of magnitude higher than their competitors in the same price category. The 12-bit wide instructions are highly symmetrical, resulting in a typical 2:1 code compression over other 8-bit microcontrollers in its class. The easy-to-use and easy-to-remember instruction set reduces development time significantly.

The PIC12F510/16F506 products are equipped with special features that reduce system cost and power requirements. The Power-on Reset (POR) and Device Reset Timer (DRT) eliminate the need for external Reset circuitry. There are four oscillator configurations to choose from (six on the PIC16F506), including INTOSC Internal Oscillator mode and the Power-Saving LP (Low-power) Oscillator mode. Power-Saving Sleep mode, Watchdog Timer and code protection features improve system cost, power and reliability.

The PIC12F510/16F506 devices allow the customer to take full advantage of Microchip's price leadership in Flash programmable microcontrollers, while benefiting from the Flash programmable flexibility.

The PIC12F510/16F506 products are supported by a full-featured macro assembler, a software simulator, an in-circuit emulator, a 'C' compiler, a low-cost development programmer and a full featured programmer. All the tools are supported on IBM® PC and compatible machines.

1.1 Applications

The PIC12F510/16F506 devices fit in applications ranging from personal care appliances and security systems to low-power remote transmitters/receivers. The Flash technology makes customizing application programs (transmitter codes, appliance settings, receiver frequencies, etc.) extremely fast and convenient. The small footprint packages, for through hole or surface mounting, make these microcontrollers perfect for applications with space limitations. Low-cost, low-power, high-performance, ease-of-use and I/O flexibility make the PIC12F510/16F506 devices very versatile, even in areas where no microcontroller use has been considered before (e.g., timer functions, logic and PLDs in larger systems and coprocessor applications).

TABLE 1-1: PIC12F510/16F506 DEVICES

		PIC16F506	PIC12F510
Clock	Maximum Frequency of Operation (MHz)	20	8
Memory	Flash Program Memory (words)	1024	1024
	Data Memory (bytes)	67	38
Peripherals	Timer Module(s)	TMR0	TMR0
	Wake-up from Sleep on Pin Change	Yes	Yes
Features	I/O Pins	11	5
	Input Only Pin	1	1
	Internal Pull-ups	Yes	Yes
	In-Circuit Serial Programming	Yes	Yes
	Number of Instructions	33	33
	Packages	14-pin PDIP, SOIC, TSSOP	8-pin PDIP, SOIC, MSOP, DFN

The PIC12F510/16F506 devices have Power-on Reset, selectable Watchdog Timer, selectable code-protect, high I/O current capability and precision internal oscillator.
The PIC12F510/16F506 devices use serial programming with data pin RB0/GP0 and clock pin RB1/GP1.

NOTES:

© 2007 Microchip Technology Inc.

2.0 PIC12F510/16F506 DEVICE VARIETIES

A variety of packaging options are available. Depending on application and production requirements, the proper device option can be selected using the information in this section. When placing orders, please use the PIC12F510/16F506 Product Identification System at the back of this data sheet to specify the correct part number.

2.1 Quick Turn Programming (QTP) Devices

Microchip offers a QTP programming service for factory production orders. This service is made available for users who choose not to program medium-to-high quantity units and whose code patterns have stabilized. The devices are identical to the Flash devices, but with all Flash locations and fuse options already programmed by the factory. Certain code and prototype verification procedures do apply before production shipments are available. Please contact your local Microchip Technology sales office for more details.

2.2 Serialized Quick Turn Programming^{SM} (SQTP^{SM}) Devices

Microchip offers a unique programming service, where a few user-defined locations in each device are programmed with different serial numbers. The serial numbers may be random, pseudo-random or sequential.

Serial programming allows each device to have a unique number, which can serve as an entry code, password or ID number.

NOTES:

© 2007 Microchip Technology Inc.

3.0 ARCHITECTURAL OVERVIEW

The high performance of the PIC12F510/16F506 devices can be attributed to a number of architectural features commonly found in RISC microprocessors. The PIC12F510/16F506 devices use a Harvard architecture in which program and data are accessed on separate buses. This improves bandwidth over traditional von Neumann architectures where program and data are fetched on the same bus. Separating program and data memory further allows instructions to be sized differently than the 8-bit wide data word. Instruction opcodes are 12 bits wide, making it possible to have all single-word instructions. A 12-bit wide program memory access bus fetches a 12-bit instruction in a single cycle. A two-stage pipeline overlaps fetch and execution of instructions. Consequently, all instructions (33) execute in a single cycle (200 ns @ 20 MHz, 1 µs @ 4 MHz) except for program branches.

Table 3-1 lists program memory (Flash) and data memory (RAM) for the PIC12F510/16F506 devices.

TABLE 3-1: PIC12F510/16F506 MEMORY

Device	Memory	
	Program	Data
PIC12F510	1024 x 12	38 x 8
PIC16F506	1024 x 12	67 x 8

The PIC12F510/16F506 devices can directly or indirectly address its register files and data memory. All Special Function Registers (SFRs), including the PC, are mapped in the data memory. The PIC12F510/16F506 devices have a highly orthogonal (symmetrical) instruction set that makes it possible to carry out any operation, on any register, using any addressing mode. This symmetrical nature and lack of “special optimal situations” make programming with the PIC12F510/16F506 devices simple, yet efficient. In addition, the learning curve is reduced significantly.

The PIC12F510/16F506 devices contain an 8-bit ALU and working register. The ALU is a general purpose arithmetic unit. It performs arithmetic and Boolean functions between data in the working register and any register file.

The ALU is 8 bits wide and capable of addition, subtraction, shift and logical operations. Unless otherwise mentioned, arithmetic operations are two’s complement in nature. In two-operand instructions, one operand is typically the W (working) register. The other operand is either a file register or an immediate constant. In single-operand instructions, the operand is either the W register or a file register.

The W register is an 8-bit working register used for ALU operations. It is not an addressable register.

Depending on the instruction executed, the ALU may affect the values of the Carry (C), Digit Carry (DC) and Zero (Z) bits in the STATUS register. The C and DC bits operate as a $\overline{\text{borrow}}$ and $\overline{\text{digit borrow}}$ out bit, respectively, in subtraction. See the `SUBWF` and `ADDWF` instructions for examples.

A simplified block diagram is shown in Figure 3-1 for PIC12F510 with the corresponding device pins described in Table 3-2. A simplified block diagram for PIC16F506 is shown in Figure 3-2 with the corresponding device pins described in Table 3-3.

FIGURE 3-1: PIC12F510 SERIES BLOCK DIAGRAM

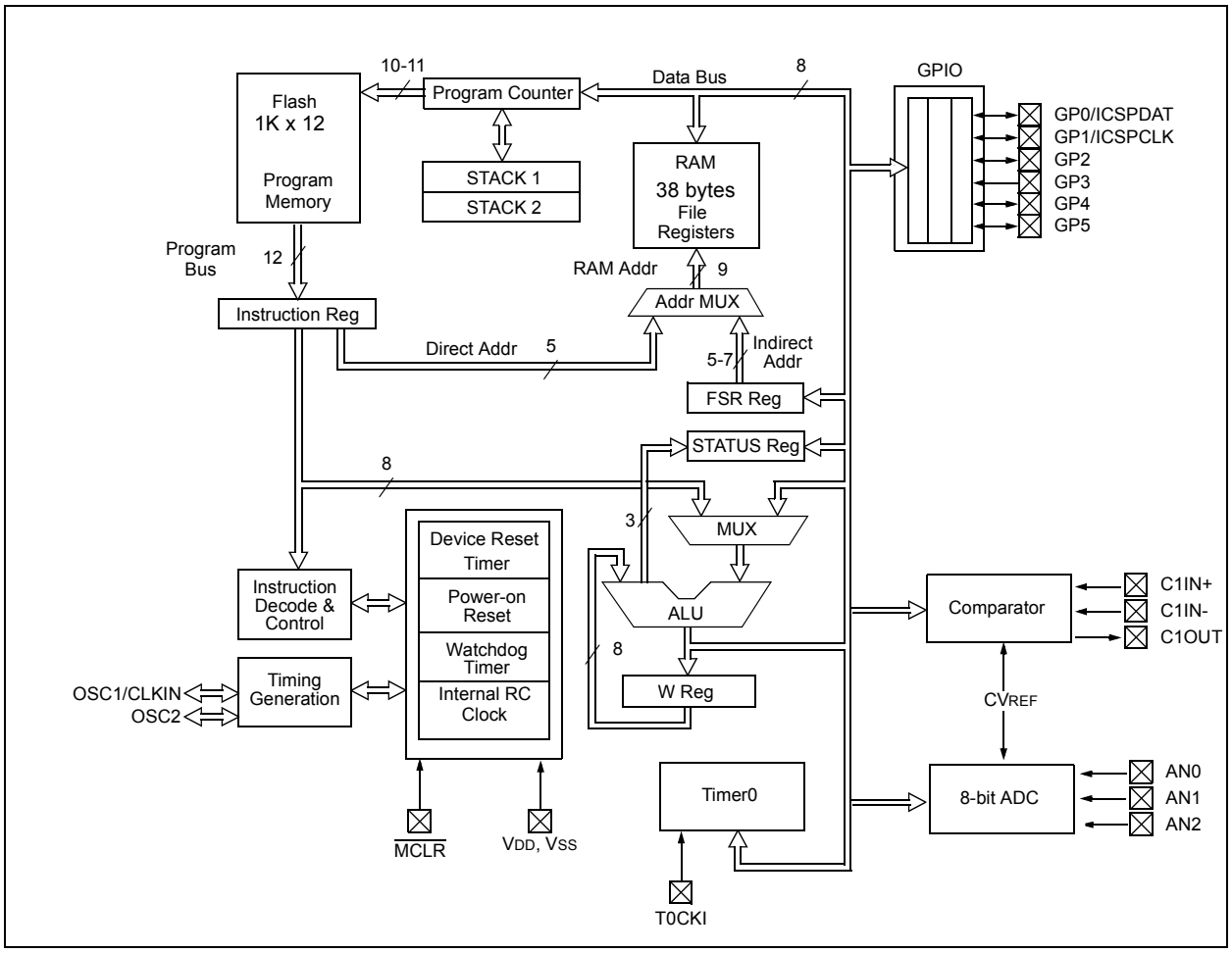

© 2007 Microchip Technology Inc.

TABLE 3-2: PIN DESCRIPTIONS – PIC12F510

Name	I/O/P Type	Input Type	Output Type	Description
GP0/AN0/C1IN+/ICSPDAT	GP0	TTL	CMOS	Bidirectional I/O port. Can be software programmed for internal weak pull-up and wake-up from Sleep on pin change.
	AN0	AN	—	ADC channel input.
	C1IN+	AN	—	Comparator input.
	ICSPDAT	ST	CMOS	In-Circuit Serial Programming data pin.
GP1/AN1/C1IN-/ICSPCLK	GP1	TTL	CMOS	Bidirectional I/O port. Can be software programmed for internal weak pull-up and wake-up from Sleep on pin change.
	AN1	AN	—	ADC channel input.
	C1IN-	AN	—	Comparator input.
	ICSPCLK	ST	—	In-Circuit Serial Programming clock pin.
GP2/AN2/T0CKI/C1OUT	GP2	TTL	CMOS	Bidirectional I/O port.
	AN2	AN	—	ADC channel input.
	T0CKI	ST	—	Timer0 clock input.
	C1OUT	—	CMOS	Comparator output.
GP3/$\overline{\text{MCLR}}$/V_{PP}	GP3	TTL	—	Standard TTL input. Can be software programmed for internal weak pull-up and wake-up from Sleep on pin change.
	$\overline{\text{MCLR}}$	ST	—	$\overline{\text{MCLR}}$ input – weak pull-up always enabled in this mode.
	V_{PP}	HV	—	Programming Voltage input.
GP4/OSC2	GP4	TTL	CMOS	Bidirectional I/O port.
	OSC2	—	XTAL	XTAL oscillator output pin.
GP5/OSC1/CLKIN	GP5	TTL	CMOS	Bidirectional I/O port.
	OSC1	XTAL	—	XTAL oscillator input pin.
	CLKIN	ST	—	EXTRC Schmitt Trigger input.
V_{DD}	V_{DD}	P	—	Positive supply for logic and I/O pins.
V_{SS}	V_{SS}	P	—	Ground reference for logic and I/O pins.

Legend: I = input, O = output, I/O = input/output, P = power, — = Not Used, TTL = TTL input, ST = Schmitt Trigger input, AN = Analog Voltage, HV = High Voltage

FIGURE 3-2: PIC16F506 SERIES BLOCK DIAGRAM

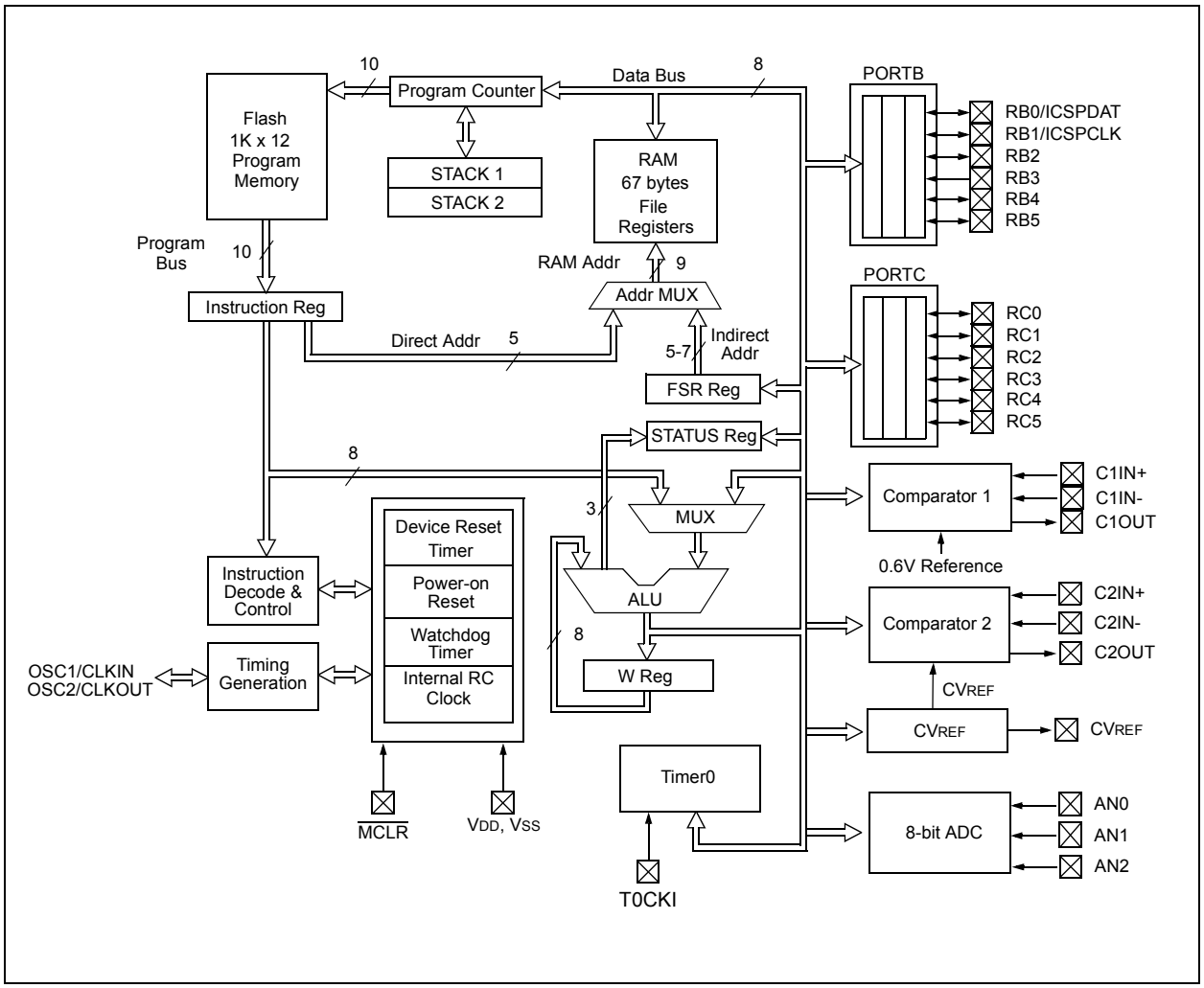

© 2007 Microchip Technology Inc.

TABLE 3-3: PIN DESCRIPTIONS – PIC16F506

Name	Function	Input Type	Output Type	Description
RB0/AN0/C1IN+/ICSPDAT	RB0	TTL	CMOS	Bidirectional I/O port. Can be software programmed for internal weak pull-up and wake-up from Sleep on pin change.
	AN0	AN	—	ADC channel input.
	C1IN+	AN	—	Comparator 1 input.
	ICSPDAT	ST	CMOS	In-Circuit Serial Programming data pin.
RB1/AN1/C1IN-/ICSPCLK	RB1	TTL	CMOS	Bidirectional I/O port. Can be software programmed for internal weak pull-up and wake-up from Sleep on pin change.
	AN1	AN	—	ADC channel input.
	C1IN-	AN	—	Comparator 1 input.
	ICSPCLK	ST	—	In-Circuit Serial Programming clock pin.
RB2/AN2/C1OUT	RB2	TTL	CMOS	Bidirectional I/O port.
	AN2	AN	—	ADC channel input.
	C1OUT	—	CMOS	Comparator 1 output.
RB3/$\overline{\text{MCLR}}$/V_{PP}	RB3	TTL	—	Standard TTL input. Can be software programmed for internal weak pull-up and wake-up from Sleep on pin change.
	$\overline{\text{MCLR}}$	ST	—	$\overline{\text{MCLR}}$ input – weak pull-up always enabled in this mode.
	V_{PP}	HV	—	Programming voltage input.
RB4/OSC2/CLKOUT	RB4	TTL	CMOS	Bidirectional I/O port. Can be software programmed for internal weak pull-up and wake-up from Sleep on pin change.
	OSC2	—	XTAL	XTAL oscillator output pin.
	CLKOUT	—	CMOS	EXTRC/INTOSC CLKOUT pin (F_{OSC}/4).
RB5/OSC1/CLKIN	RB5	TTL	CMOS	Bidirectional I/O port.
	OSC1	XTAL	—	XTAL oscillator input pin.
	CLKIN	ST	—	EXTRC/EC Schmitt Trigger input.
RC0/C2IN+	RC0	TTL	CMOS	Bidirectional I/O port.
	C2IN+	AN	—	Comparator 2 input.
RC1/C2IN-	RC1	TTL	CMOS	Bidirectional I/O port.
	C2IN-	AN	—	Comparator 2 input.
RC2/CV_{REF}	RC2	TTL	CMOS	Bidirectional I/O port.
	CV_{REF}	—	AN	Programmable Voltage Reference output.
RC3	RC3	TTL	CMOS	Bidirectional I/O port.
RC4/C2OUT	RC4	TTL	CMOS	Bidirectional I/O port.
	C2OUT	—	CMOS	Comparator 2 output.
RC5/T0CKI	RC5	TTL	CMOS	Bidirectional I/O port.
	T0CKI	ST	—	Timer0 clock input.
V_{DD}	V_{DD}	P	—	Positive supply for logic and I/O pins.
V_{SS}	V_{SS}	P	—	Ground reference for logic and I/O pins.

Legend: I = input, O = output, I/O = input/output, P = power, — = Not Used, TTL = TTL input, ST = Schmitt Trigger input, AN = Analog Voltage, HV = High Voltage

3.1 Clocking Scheme/Instruction Cycle

The clock input (OSC1/CLKIN pin) is internally divided by four to generate four non-overlapping quadrature clocks, namely Q1, Q2, Q3 and Q4. Internally, the PC is incremented every Q1 and the instruction is fetched from program memory and latched into the instruction register in Q4. It is decoded and executed during the following Q1 through Q4. The clocks and instruction execution flow is shown in Figure 3-3 and Example 3-1.

3.2 Instruction Flow/Pipelining

An instruction cycle consists of four Q cycles (Q1, Q2, Q3 and Q4). The instruction fetch and execute are pipelined such that fetch takes one instruction cycle, while decode and execute take another instruction cycle. However, due to the pipelining, each instruction effectively executes in one cycle. If an instruction causes the PC to change (e.g., `GOTO`), then two cycles are required to complete the instruction (Example 3-1).

A fetch cycle begins with the PC incrementing in Q1.

In the execution cycle, the fetched instruction is latched into the Instruction Register (IR) in cycle Q1. This instruction is then decoded and executed during the Q2, Q3 and Q4 cycles. Data memory is read during Q2 (operand read) and written during Q4 (destination write).

FIGURE 3-3: CLOCK/INSTRUCTION CYCLE

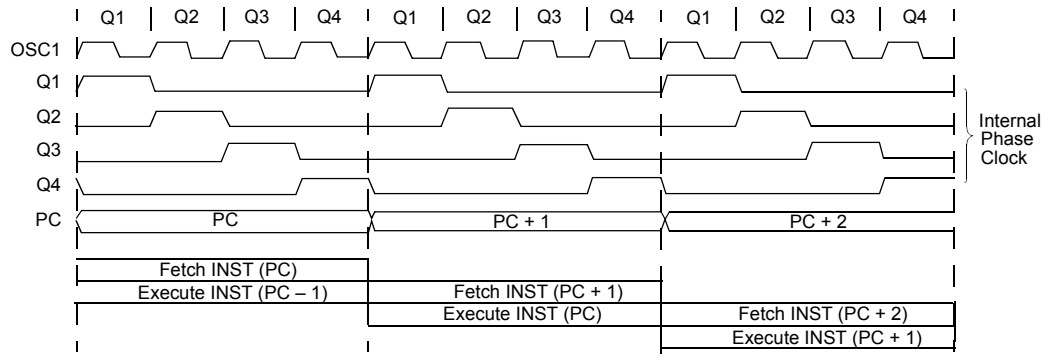

EXAMPLE 3-1: INSTRUCTION PIPELINE FLOW

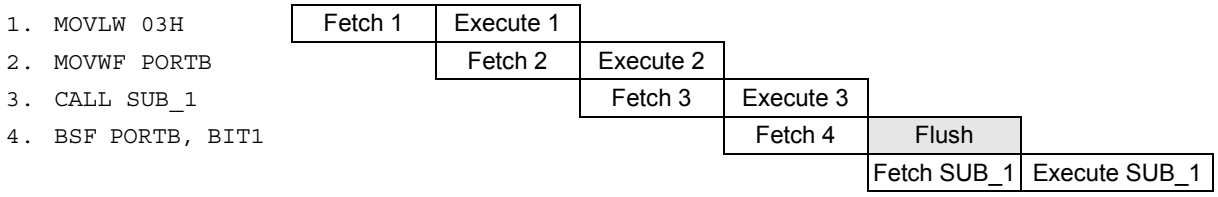

All instructions are single cycle, except for any program branches. These take two cycles, since the fetch instruction is “flushed” from the pipeline, while the new instruction is being fetched and then executed.

© 2007 Microchip Technology Inc.

4.0 MEMORY ORGANIZATION

The PIC12F510/16F506 memories are organized into program memory and data memory. For devices with more than 512 bytes of program memory, a paging scheme is used. Program memory pages are accessed using STATUS register bit PA0. For the PIC12F510 and PIC16F506, with data memory register files of more than 32 registers, a banking scheme is used. Data memory banks are accessed using the File Select Register (FSR).

4.1 Program Memory Organization for the PIC12F510/16F506

The PIC12F510/16F506 devices have a 10-bit Program Counter (PC) capable of addressing a 2K x 12 program memory space.

Only the first 1K x 12 (0000h-03FFh) are physically implemented (see Figure 4-1). Accessing a location above these boundaries will cause a wraparound within the 1K x 12 space. The effective Reset vector is a 0000h (see Figure 4-1). Location 03FFh contains the internal clock oscillator calibration value. This value should never be overwritten.

FIGURE 4-1: PROGRAM MEMORY MAP AND STACK FOR THE PIC12F510/16F506

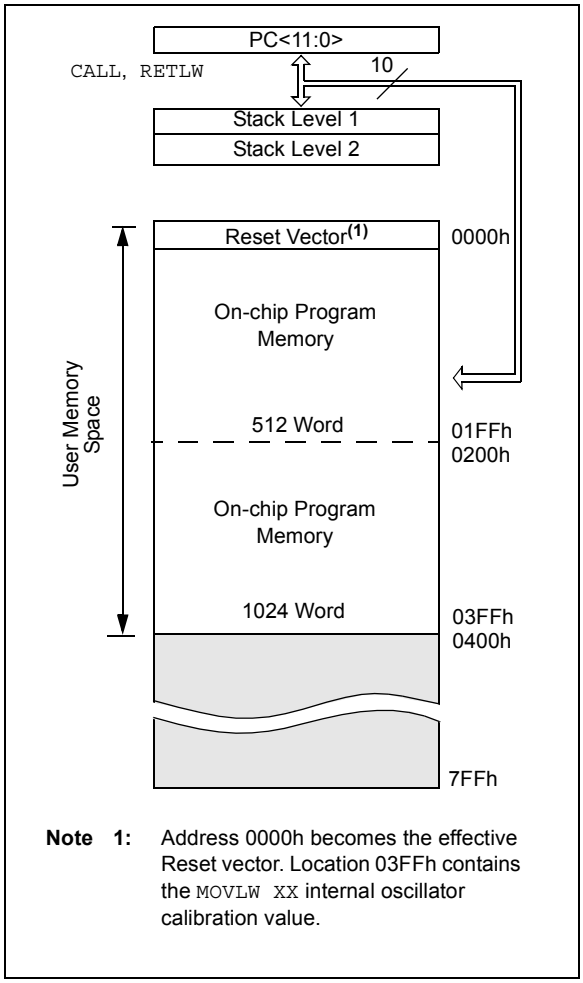

Note 1: Address 0000h becomes the effective Reset vector. Location 03FFh contains the `MOVLW XX` internal oscillator calibration value.

4.2 Data Memory Organization

Data memory is composed of registers or bytes of RAM. Therefore, data memory for a device is specified by its register file. The register file is divided into two functional groups: Special Function Registers (SFRs) and General Purpose Registers (GPRs).

The Special Function Registers include the TMR0 register, the Program Counter (PCL), the STATUS register, the I/O registers (ports) and the File Select Register (FSR). In addition, Special Function Registers are used to control the I/O port configuration and prescaler options.

The General Purpose Registers are used for data and control information under command of the instructions.

For the PIC12F510, the register file is composed of 10 Special Function Registers, 6 General Purpose Registers and 32 General Purpose Registers accessed by banking (see Figure 4-2).

For the PIC16F506, the register file is composed of 13 Special Function Registers, 3 General Purpose Registers and 64 General Purpose Registers, accessed by banking (see Figure 4-3).

4.2.1 GENERAL PURPOSE REGISTER FILE

The General Purpose Register file is accessed either directly or indirectly through the File Select Register (FSR). See **Section 4.8 "Indirect Data Addressing: INDF and FSR Registers"**.

FIGURE 4-2: PIC12F510 REGISTER FILE MAP

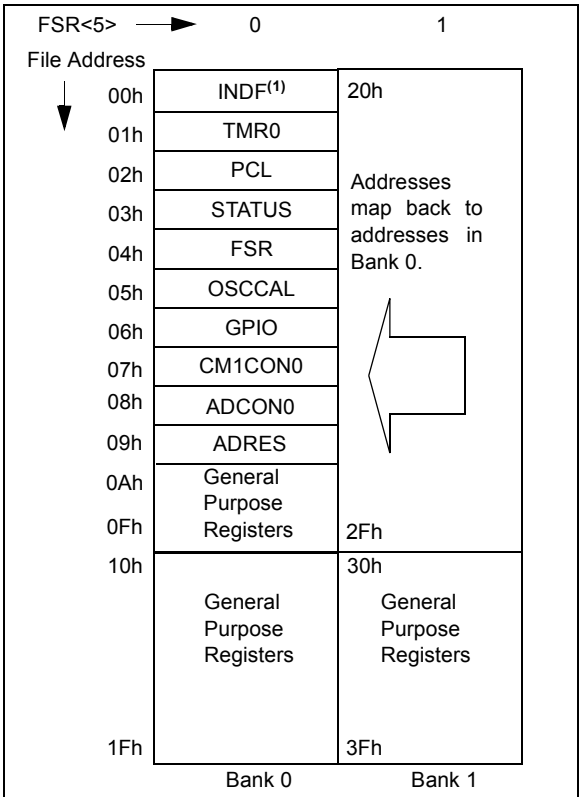

Note 1: Not a physical register.

FIGURE 4-3: PIC16F506 REGISTER FILE MAP

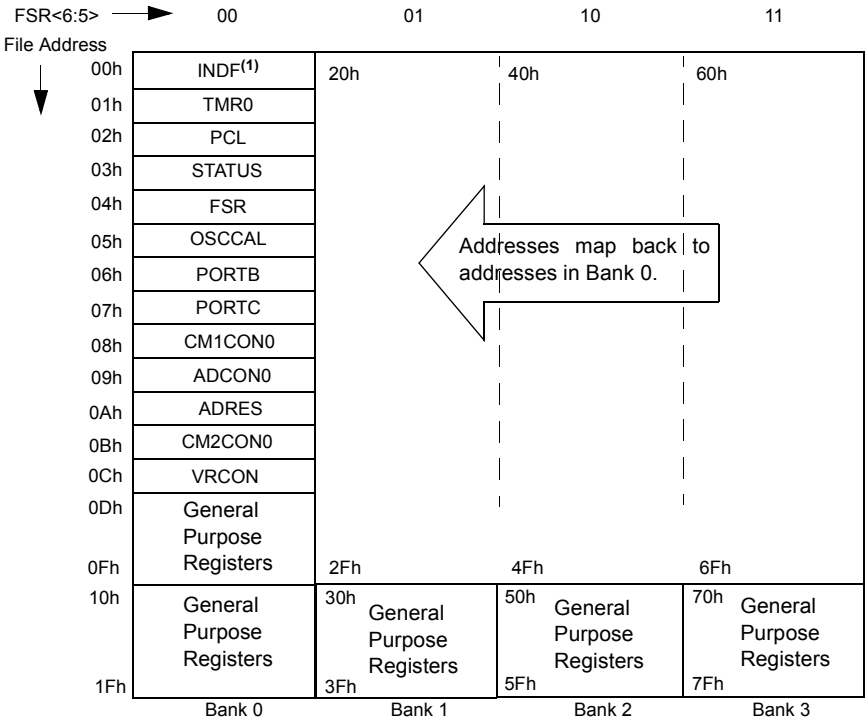

Note 1: Not a physical register.

© 2007 Microchip Technology Inc.

4.2.2 SPECIAL FUNCTION REGISTERS

The Special Function Registers (SFRs) are registers used by the CPU and peripheral functions to control the operation of the device (see Table 4-1).

The Special Function Registers can be classified into two sets. The Special Function Registers associated with the “core” functions are described in this section. Those related to the operation of the peripheral features are described in the section for each peripheral feature.

TABLE 4-1: SPECIAL FUNCTION REGISTER SUMMARY – PIC12F510

Address	Name	Bit 7	Bit 6	Bit 5	Bit 4	Bit 3	Bit 2	Bit 1	Bit 0	Value on Power-on Reset
N/A	TRIS	I/O Control Registers (TRISGPIO)								--11 1111
N/A	OPTION	Contains control bits to configure Timer0 and Timer0/WDT Prescaler								1111 1111
00h	INDF	Uses contents of FSR to address data memory (not a physical register)								xxxx xxxx
01h	TMR0	Timer0 Module Register								xxxx xxxx
02h(1)	PCL	Low Order 8 bits of PC								1111 1111
03h	STATUS	GPWUF	CWUF	PA0	$\overline{TO}$	$\overline{PD}$	Z	DC	C	0001 1xxx
04h	FSR	Indirect Data Memory Address Pointer								110x xxxx
05h	OSCCAL	CAL6	CAL5	CAL4	CAL3	CAL2	CAL1	CAL0	—	1111 111-
06h	GPIO	—	—	GP5	GP4	GP3	GP2	GP1	GP0	--xx xxxx
07h	CM1CON0	C1OUT	$\overline{C1OUTEN}$	C1POL	$\overline{C1T0CS}$	C1ON	C1NREF	C1PREF	$\overline{C1WU}$	1111 1111
08h	ADCON0	ANS1	ANS0	ADCS1	ADCS0	CHS1	CHS0	GO/$\overline{DONE}$	ADON	1111 1100
09h	ADRES	ADC Conversion Result								xxxx xxxx

Legend: x = unknown, u = unchanged, – = unimplemented, read as ‘0’ (if applicable). Shaded cells = unimplemented or unused.

Note 1: The upper byte of the Program Counter is not directly accessible. See **Section 4.6 “Program Counter”** for an explanation of how to access these bits.

TABLE 4-2: SPECIAL FUNCTION REGISTER SUMMARY – PIC16F506

Address	Name	Bit 7	Bit 6	Bit 5	Bit 4	Bit 3	Bit 2	Bit 1	Bit 0	Value on Power-on Reset
N/A	TRIS	I/O Control Registers (TRISB, TRISC)								--11 1111
N/A	OPTION	Contains control bits to configure Timer0 and Timer0/WDT Prescaler								1111 1111
00h	INDF	Uses contents of FSR to address data memory (not a physical register)								xxxx xxxx
01h	TMR0	Timer0 Module Register								xxxx xxxx
02h(1)	PCL	Low Order 8 bits of PC								1111 1111
03h	STATUS	RBWUF	CWUF	PA0	$\overline{TO}$	$\overline{PD}$	Z	DC	C	0001 1xxx
04h	FSR	Indirect Data Memory Address Pointer								100x xxxx
05h	OSCCAL	CAL6	CAL5	CAL4	CAL3	CAL2	CAL1	CAL0	—	1111 111-
06h	PORTB	—	—	RB5	RB4	RB3	RB2	RB1	RB0	--xx xxxx
07h	PORTC	—	—	RC5	RC4	RC3	RC2	RC1	RC0	--xx xxxx
08h	CM1CON0	C1OUT	$\overline{C1OUTEN}$	C1POL	$\overline{C1T0CS}$	C1ON	C1NREF	C1PREF	$\overline{C1WU}$	1111 1111
09h	ADCON0	ANS1	ANS0	ADCS1	ADCS0	CHS1	CHS0	GO/$\overline{DONE}$	ADON	1111 1100
0Ah	ADRES	ADC Conversion Result								xxxx xxxx
0Bh	CM2CON0	C2OUT	$\overline{C2OUTEN}$	C2POL	C2PREF2	C2ON	C2NREF	C2PREF1	$\overline{C2WU}$	1111 1111
0Ch	VRCON	VREN	VROE	VRR	—(2)	VR3	VR2	VR1	VR0	0011 1111

Legend: x = unknown, u = unchanged, – = unimplemented, read as '0' (if applicable). Shaded cells = unimplemented or unused.

Note 1: The upper byte of the Program Counter is not directly accessible. See **Section 4.6 "Program Counter"** for an explanation of how to access these bits.

2: Unimplemented bit VRCON<4> read as '1'.

4.3 STATUS Register

This register contains the arithmetic status of the ALU, the Reset status and the page preselect bit.

The STATUS register can be the destination for any instruction, as with any other register. If the STATUS register is the destination for an instruction that affects the Z, DC or C bits, then the write to these three bits is disabled. These bits are set or cleared according to the device logic. Furthermore, the $\overline{TO}$ and $\overline{PD}$ bits are not writable. Therefore, the result of an instruction with the STATUS register as destination may be different than intended.

For example, CLRF STATUS, will clear the upper three bits and set the Z bit. This leaves the STATUS register as 000u u1uu (where u = unchanged).

Therefore, it is recommended that only BCF, BSF and MOVWF instructions be used to alter the STATUS register. These instructions do not affect the Z, DC or C bits from the STATUS register. For other instructions which do affect Status bits, see **Section 11.0 "Instruction Set Summary"**.

© 2007 Microchip Technology Inc.

REGISTER 4-1: STATUS: STATUS REGISTER (PIC12F510)

R/W-0	R/W-0	R/W-0	R-1	R-1	R/W-x	R/W-x	R/W-x
GPWUF	CWUF	PA0	$\overline{TO}$	$\overline{PD}$	Z	DC	C
bit 7							bit 0

Legend:			
R = Readable bit	W = Writable bit	U = Unimplemented bit, read as '0'	
-n = Value at POR	'1' = Bit is set	'0' = Bit is cleared	x = Bit is unknown

bit 7 **GPWUF**: GPIO Reset bit
1 = Reset due to wake-up from Sleep on pin change
0 = After power-up or other Reset

bit 6 **CWUF**: Comparator Reset bit
1 = Reset due to wake-up from Sleep on comparator change
0 = After power-up or other Reset

bit 5 **PA0**: Program Page Preselect bit
1 = Page 1 (200h-3FFh)
0 = Page 0 (000h-1FFh)
Each page is 512 bytes.
Using the PA0 bit as a general purpose read/write bit in devices which do not use it for program page preselect is not recommended, since this may affect upward compatibility with future products.

bit 4 **$\overline{TO}$**: Time-Out bit
1 = After power-up, CLRWDT instruction, or SLEEP instruction
0 = A WDT time-out occurred

bit 3 **$\overline{PD}$**: Power-Down bit
1 = After power-up or by the CLRWDT instruction
0 = By execution of the SLEEP instruction

bit 2 **Z**: Zero bit
1 = The result of an arithmetic or logic operation is zero
0 = The result of an arithmetic or logic operation is not zero

bit 1 **DC**: Digit Carry/$\overline{Borrow}$ bit (for ADDWF and SUBWF instructions)
ADDWF:
1 = A carry from the 4th low-order bit of the result occurred
0 = A carry from the 4th low-order bit of the result did not occur
SUBWF:
1 = A borrow from the 4th low-order bit of the result did not occur
0 = A borrow from the 4th low-order bit of the result occurred

bit 0 **C**: Carry/$\overline{Borrow}$ bit (for ADDWF, SUBWF and RRF, RLF instructions)

ADDWF:	SUBWF:	RRF or RLF:
1 = A carry occurred	1 = A borrow did not occur	Load bit with LSb or MSb, respectively
0 = A carry did not occur	0 = A borrow occurred	

REGISTER 4-2: STATUS: STATUS REGISTER (PIC16F506)

R/W-0	R/W-0	R/W-0	R-1	R-1	R/W-x	R/W-x	R/W-x
RBWUF	CWUF	PA0	$\overline{TO}$	$\overline{PD}$	Z	DC	C
bit 7							bit 0

Legend:			
R = Readable bit	W = Writable bit	U = Unimplemented bit, read as '0'	
-n = Value at POR	'1' = Bit is set	'0' = Bit is cleared	x = Bit is unknown

bit 7 **RBWUF**: PORTB Reset bit
1 = Reset due to wake-up from Sleep on pin change
0 = After power-up or other Reset

bit 6 **CWUF**: Comparator Reset bit
1 = Reset due to wake-up from Sleep on comparator change
0 = After power-up or other Reset

bit 5 **PA0**: Program Page Preselect bit
1 = Page 1 (200h-3FFh)
0 = Page 0 (000h-1FFh)
Each page is 512 bytes.
Using the PA0 bit as a general purpose read/write bit in devices which do not use it for program page preselect is not recommended, since this may affect upward compatibility with future products.

bit 4 **$\overline{TO}$**: Time-Out bit
1 = After power-up, CLRWDT instruction, or SLEEP instruction
0 = A WDT time-out occurred

bit 3 **$\overline{PD}$**: Power-Down bit
1 = After power-up or by the CLRWDT instruction
0 = By execution of the SLEEP instruction

bit 2 **Z**: Zero bit
1 = The result of an arithmetic or logic operation is zero
0 = The result of an arithmetic or logic operation is not zero

bit 1 **DC**: Digit Carry/$\overline{\text{Borrow}}$ bit (for ADDWF and SUBWF instructions)
ADDWF:
1 = A carry from the 4th low-order bit of the result occurred
0 = A carry from the 4th low-order bit of the result did not occur
SUBWF:
1 = A borrow from the 4th low-order bit of the result did not occur
0 = A borrow from the 4th low-order bit of the result occurred

bit 0 **C**: Carry/$\overline{\text{Borrow}}$ bit (for ADDWF, SUBWF and RRF, RLF instructions)

ADDWF:	SUBWF:	RRF or RLF:
1 = A carry occurred	1 = A borrow did not occur	Load bit with LSb or MSb, respectively
0 = A carry did not occur	0 = A borrow occurred	

© 2007 Microchip Technology Inc.

4.4 OPTION Register

The OPTION register is a 8-bit wide, write-only register, that contains various control bits to configure the Timer0/WDT prescaler and Timer0.

By executing the OPTION instruction, the contents of the W register will be transferred to the OPTION register. A Reset sets the OPTION<7:0> bits.

Note 1:	If TRIS bit is set to '0', the wake-up on change and pull-up functions are disabled for that pin (i.e., note that TRIS overrides Option control of $\overline{\text{GPPU}}$/RBPU and $\overline{\text{GPWU}}$/$\overline{\text{RBWU}}$).
2:	If the T0CS bit is set to '1', it will override the TRIS function on the T0CKI pin.

REGISTER 4-3: OPTION_REG: OPTION REGISTER (PIC12F510)

W-1	W-1	W-1	W-1	W-1	W-1	W-1	W-1
$\overline{\text{GPWU}}$	$\overline{\text{GPPU}}$	T0CS	T0SE	PSA	PS2	PS1	PS0
bit 7							bit 0

Legend:			
R = Readable bit	W = Writable bit	U = Unimplemented bit, read as '0'	
-n = Value at POR	'1' = Bit is set	'0' = Bit is cleared	x = Bit is unknown

bit 7 **$\overline{\text{GPWU}}$:** Enable Wake-up On Pin Change bit (GP0, GP1, GP3)
1 = Disabled
0 = Enabled

bit 6 **$\overline{\text{GPPU}}$:** Enable Weak Pull-Ups bit (GP0, GP1, GP3)
1 = Disabled
0 = Enabled

bit 5 **T0CS:** Timer0 Clock Source Select bit
1 = Transition on T0CKI pin
0 = Internal instruction cycle clock (CLKOUT)

bit 4 **T0SE:** Timer0 Source Edge Select bit
1 = Increment on high-to-low transition on T0CKI pin
0 = Increment on low-to-high transition on T0CKI pin

bit 3 **PSA:** Prescaler Assignment bit
1 = Prescaler assigned to the WDT
0 = Prescaler assigned to Timer0

bit 2-0 **PS<2:0>:** Prescaler Rate Select bits

Bit Value	Timer0 Rate	WDT Rate
000	1 : 2	1 : 1
001	1 : 4	1 : 2
010	1 : 8	1 : 4
011	1 : 16	1 : 8
100	1 : 32	1 : 16
101	1 : 64	1 : 32
110	1 : 128	1 : 64
111	1 : 256	1 : 128

REGISTER 4-4: OPTION_REG: OPTION REGISTER (PIC16F506)

W-1	W-1	W-1	W-1	W-1	W-1	W-1	W-1
$\overline{\text{RBWU}}$	$\overline{\text{RBPU}}$	T0CS	T0SE	PSA	PS2	PS1	PS0
bit 7							bit 0

Legend:			
R = Readable bit	W = Writable bit	U = Unimplemented bit, read as '0'	
-n = Value at POR	'1' = Bit is set	'0' = Bit is cleared	x = Bit is unknown

bit 7 **$\overline{\text{RBWU}}$:** Enable Wake-up On Pin Change bit (RB0, RB1, RB3, RB4)
1 = Disabled
0 = Enabled

bit 6 **$\overline{\text{RBPU}}$:** Enable Weak Pull-Ups bit (RB0, RB1, RB3, RB4)
1 = Disabled
0 = Enabled

bit 5 **T0CS:** Timer0 Clock Source Select bit
1 = Transition on T0CKI pin
0 = Internal instruction cycle clock (CLKOUT)

bit 4 **T0SE:** Timer0 Source Edge Select bit
1 = Increment on high-to-low transition on T0CKI pin
0 = Increment on low-to-high transition on T0CKI pin

bit 3 **PSA:** Prescaler Assignment bit
1 = Prescaler assigned to the WDT
0 = Prescaler assigned to Timer0

bit 2-0 **PS<2:0>:** Prescaler Rate Select bits

Bit Value	Timer0 Rate	WDT Rate
000	1 : 2	1 : 1
001	1 : 4	1 : 2
010	1 : 8	1 : 4
011	1 : 16	1 : 8
100	1 : 32	1 : 16
101	1 : 64	1 : 32
110	1 : 128	1 : 64
111	1 : 256	1 : 128

© 2007 Microchip Technology Inc.

4.5 OSCCAL Register

The Oscillator Calibration (OSCCAL) register is used to calibrate the internal precision 4/8 MHz oscillator. It contains seven bits for calibration.

Note:	Erasing the device will also erase the pre-programmed internal calibration value for the internal oscillator. The calibration value must be read prior to erasing the part so it can be reprogrammed correctly later.

After you move in the calibration constant, do not change the value. See **Section 10.2.5 "Internal 4/8 MHz RC Oscillator"**.

REGISTER 4-5: OSCCAL: OSCILLATOR CALIBRATION REGISTER

R/W-1	R/W-1	R/W-1	R/W-1	R/W-1	R/W-1	R/W-1	U-0
CAL6	CAL5	CAL4	CAL3	CAL2	CAL1	CAL0	—
bit 7							bit 0

Legend:			
R = Readable bit	W = Writable bit	U = Unimplemented bit, read as '0'	
-n = Value at POR	'1' = Bit is set	'0' = Bit is cleared	x = Bit is unknown

bit 7-1 **CAL<6:0>**: Oscillator Calibration bits

0111111 = Maximum frequency
•
•
•
0000001
0000000 = Center frequency
1111111
•
•
•
1000000 = Minimum frequency

bit 0 **Unimplemented**: Read as '0'

4.6 Program Counter

As a program instruction is executed, the Program Counter (PC) will contain the address of the next program instruction to be executed. The PC value is increased by one every instruction cycle, unless an instruction changes the PC.

For a GOTO instruction, bits 8:0 of the PC are provided by the GOTO instruction word. The Program Counter (PCL) is mapped to PC<7:0>. Bit 5 of the STATUS register provides page information to bit 9 of the PC (Figure 4-4).

For a CALL instruction, or any instruction where the PCL is the destination, bits 7:0 of the PC again are provided by the instruction word. However, PC<8> does not come from the instruction word, but is always cleared (Figure 4-4).

Instructions where the PCL is the destination or modify PCL instructions include MOVWF PC, ADDWF PC and BSF PC,5.

Note:	Because PC<8> is cleared in the CALL instruction or any modify PCL instruction, all subroutine calls or computed jumps are limited to the first 256 locations of any program memory page (512 words long).

FIGURE 4-4: LOADING OF PC BRANCH INSTRUCTIONS

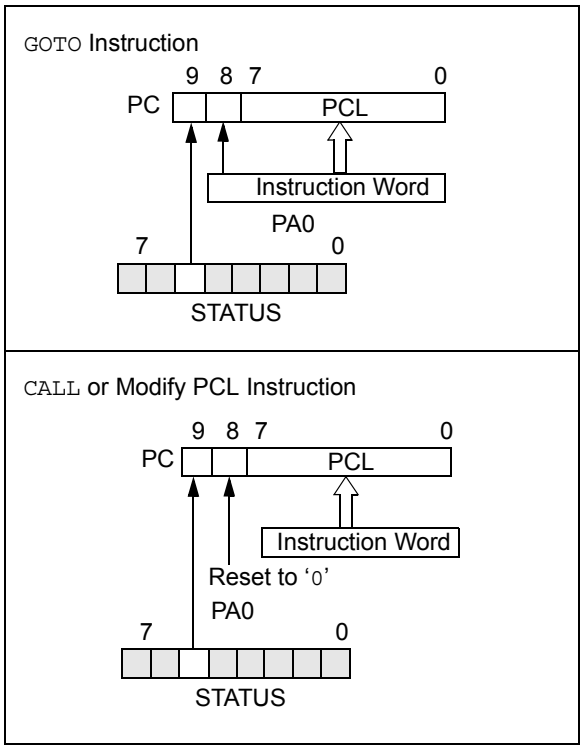

4.6.1 EFFECTS OF RESET

The PC is set upon a Reset, which means that the PC addresses the last location in the last page (i.e., the oscillator calibration instruction). After executing MOVLW XX, the PC will roll over to location 00h and begin executing user code.

The STATUS register page preselect bits are cleared upon a Reset, which means that page 0 is preselected.

Therefore, upon a Reset, a GOTO instruction will automatically cause the program to jump to page 0 until the value of the page bits is altered.

4.7 Stack

The PIC12F510/16F506 devices have a two-deep, 12-bit wide hardware PUSH/POP stack.

A CALL instruction will PUSH the current value of Stack 1 into Stack 2 and then PUSH the current PC value, incremented by one, into Stack Level 1. If more than two sequential CALLs are executed, only the most recent two return addresses are stored.

A RETLW instruction will POP the contents of Stack Level 1 into the PC and then copy Stack Level 2 contents into Stack Level 1. If more than two sequential RETLWs are executed, the stack will be filled with the address previously stored in Stack Level 2.

Note 1:	The W register will be loaded with the literal value specified in the instruction. This is particularly useful for the implementation of data look-up tables within the program memory.
2:	There are no Status bits to indicate stack overflows or stack underflow conditions.
3:	There are no instruction mnemonics called PUSH or POP. These are actions that occur from the execution of the CALL and RETLW instructions.

© 2007 Microchip Technology Inc.

4.8 Indirect Data Addressing: INDF and FSR Registers

The INDF register is not a physical register. Addressing INDF actually addresses the register whose address is contained in the FSR register (FSR is a *pointer*). This is indirect addressing.

4.8.1 INDIRECT ADDRESSING EXAMPLE

- Register file 07 contains the value 10h
- Register file 08 contains the value 0Ah
- Load the value 07 into the FSR register
- A read of the INDF register will return the value of 10h
- Increment the value of the FSR register by one (FSR = 08)
- A read of the INDR register now will return the value of 0Ah.

Reading INDF itself indirectly (FSR = 0) will produce 00h. Writing to the INDF register indirectly results in a no operation (although Status bits may be affected).

A simple program to clear RAM locations 10h-1Fh using indirect addressing is shown in Example 4-1.

EXAMPLE 4-1: HOW TO CLEAR RAM USING INDIRECT ADDRESSING

```
        MOVLW   0x10     ;initialize pointer
        MOVWF   FSR      ;to RAM
NEXT    CLRF    INDF     ;clear INDF register
        INCF    FSR,F    ;inc pointer
        BTFSC   FSR,4    ;all done?
        GOTO    NEXT     ;NO, clear next
CONTINUE
            :            ;YES, continue
            :
```

The FSR is a 5-bit wide register. It is used in conjunction with the INDF register to indirectly address the data memory area.

The FSR<4:0> bits are used to select data memory addresses 00h to 1Fh.

PIC16F506 – Uses FSR<6:5>. Selects from Bank 0 to Bank 3. FSR<7> is unimplemented, read as '1'.

PIC12F510 – Uses FSR<5>. Selects from Bank 0 to Bank 1. FSR<7:6> are unimplemented, read as '11'.

FIGURE 4-5: DIRECT/INDIRECT ADDRESSING (PIC12F510)

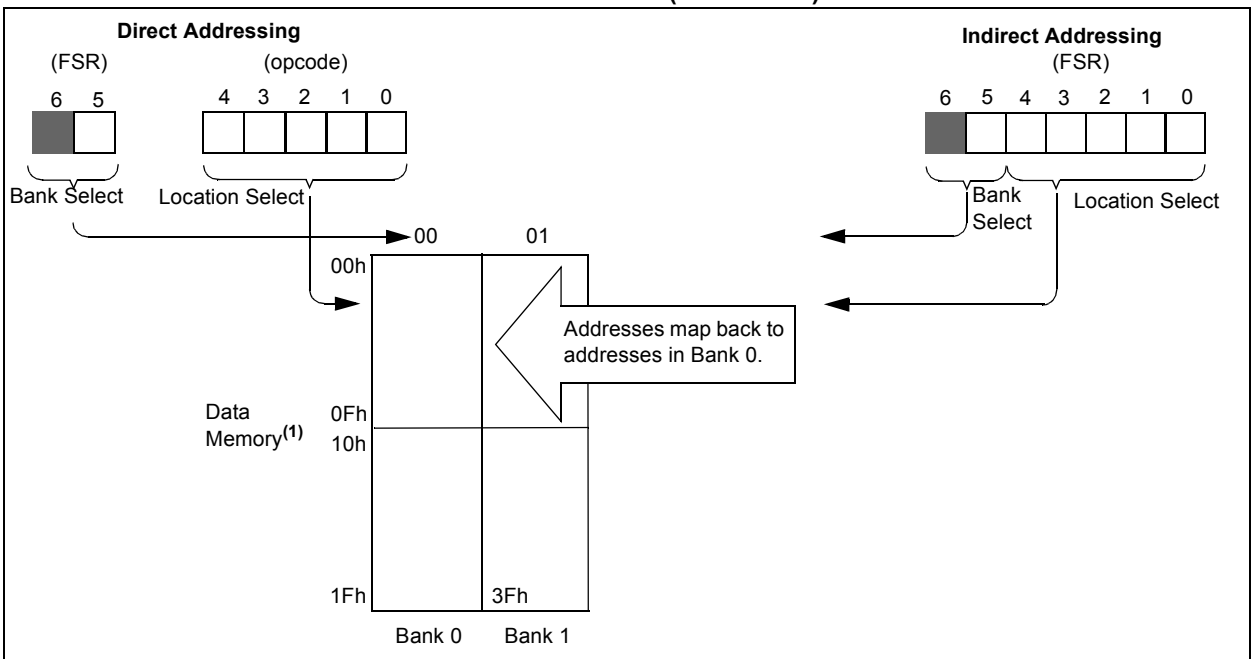

Note 1: For register map detail, see Figure 4-2.
2: Grey boxes are unimplemented and read as '1'.

FIGURE 4-6: DIRECT/INDIRECT ADDRESSING (PIC16F506)

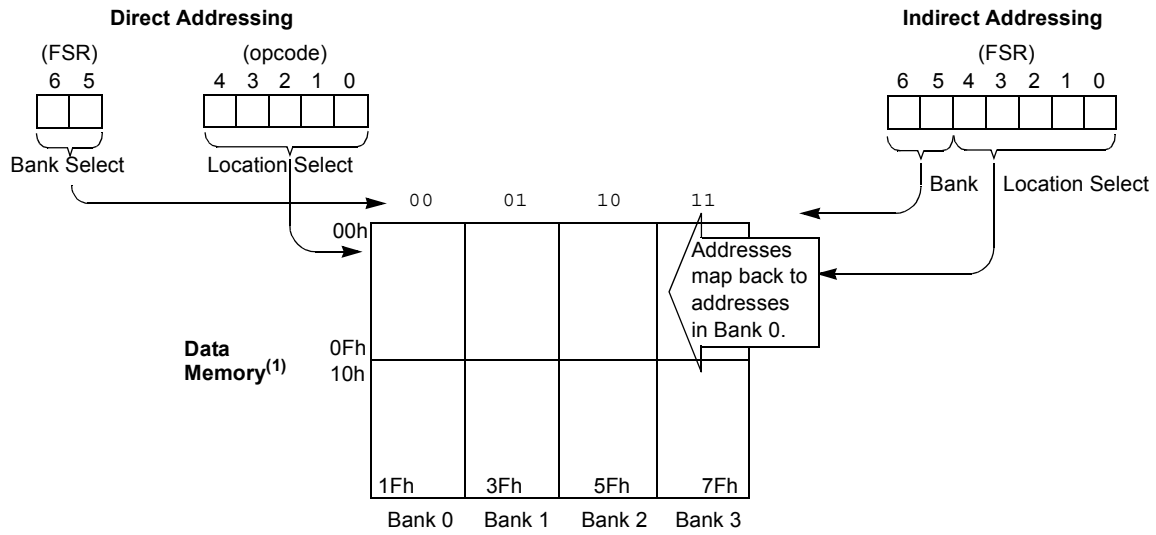

Note 1: For register map detail, see Figure 4-3.

© 2007 Microchip Technology Inc.

5.0 I/O PORT

As with any other register, the I/O register(s) can be written and read under program control. However, read instructions (e.g., `MOVF PORTB, W`) always read the I/O pins independent of the pin's Input/Output modes. On Reset, all I/O ports are defined as input (inputs are at high-impedance) since the I/O control registers are all set.

Note:	On the PIC12F510, I/O PORTB is referenced as GPIO. On the PIC16F506, I/O PORTB is referenced as PORTB.

5.1 PORTB/GPIO

PORTB/GPIO is an 8-bit I/O register. Only the low-order 6 bits are used (RB/GP<5:0>). Bits 7 and 6 are unimplemented and read as '0's. Please note that RB3/GP3 is an input only pin. The Configuration Word can set several I/O's to alternate functions. When acting as alternate functions, the pins will read as '0' during a port read. Pins RB0/GP0, RB1/GP1, RB3/GP3 and RB4 (PIC16F506 only) can be configured with weak pull-up and also for wake-up on change. The wake-up on change and weak pull-up functions are not pin selectable. If RB3/GP3/$\overline{MCLR}$ is configured as $\overline{MCLR}$, weak pull-up is always on and wake-up on change for this pin is not enabled.

5.2 PORTC (PIC16F506 Only)

PORTC is an 8-bit I/O register. Only the low-order 6 bits are used (RC<5:0>). Bits 7 and 6 are unimplemented and read as '0's.

5.3 TRIS Registers

The Output Driver Control register is loaded with the contents of the W register by executing the `TRIS f` instruction. A '1' from a TRIS register bit puts the corresponding output driver in a High-Impedance mode. A '0' puts the contents of the output data latch on the selected pins, enabling the output buffer. The exception is RB3/GP3, which are input only, and the T0CKI pin, which may be controlled by the OPTION register. See Register 4-3.

Note:	A read of the port reads the pins, not the output data latches. That is, if an output driver on a pin is enabled and driven high but the external system is holding it low, a read of the port will indicate that the pin is low.

Note:	The TRIS registers are write-only and are set (output drivers disabled) upon Reset.

5.4 I/O Interfacing

The equivalent circuit for an I/O port pin is shown in Figure 5-1. All port pins, except RB3/GP3 which is input only, may be used for both input and output operations. For input operations, these ports are non-latching. Any input must be present until read by an input instruction (e.g., `MOVF PORTB, W`). The outputs are latched and remain unchanged until the output latch is rewritten. To use a port pin as output, the corresponding direction control bit in TRIS must be cleared (= `0`). For use as an input, the corresponding TRIS bit must be set. Any I/O pin (except RB3/GP3) can be programmed individually as input or output.

FIGURE 5-1: PIC12F510/16F506 EQUIVALENT CIRCUIT FOR PIN DRIVE(2)

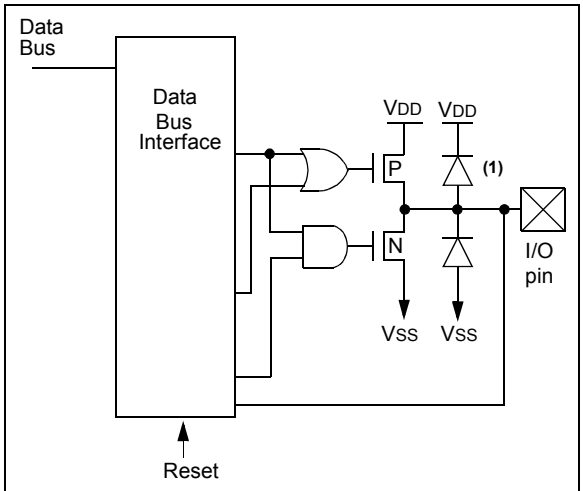

Note 1: GP3/RB3 has protection diode to VSS only.

2: For pin specific information, see Figure 5-2 through Figure 5-13.

FIGURE 5-2: BLOCK DIAGRAM OF GP0/RB0 AND GP1/RB1

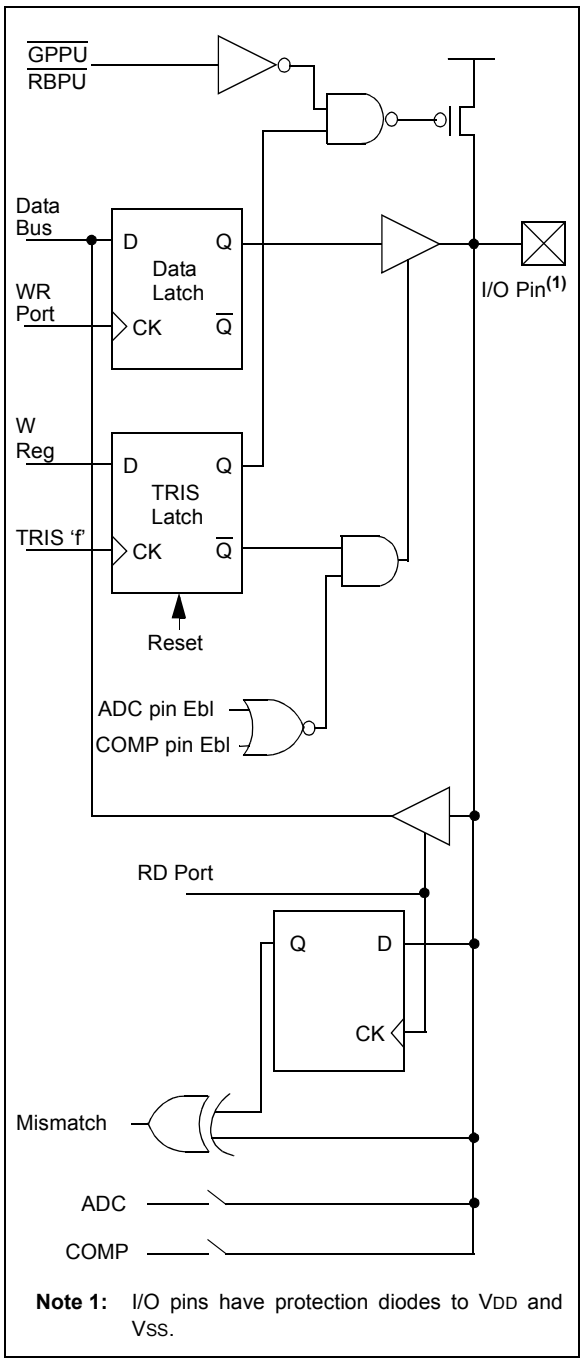

Note 1: I/O pins have protection diodes to VDD and VSS.

FIGURE 5-3: BLOCK DIAGRAM OF GP3/RB3 (With Weak Pull-up And Wake-up On Change)

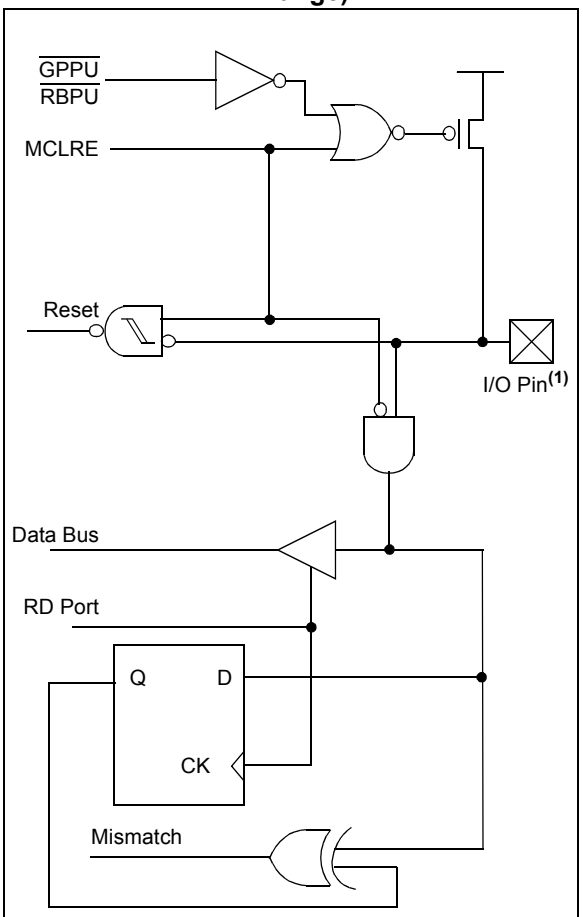

Note 1: GP3/MCLR pin has a protection diode to VSS only.

© 2007 Microchip Technology Inc.

FIGURE 5-4: BLOCK DIAGRAM OF GP2

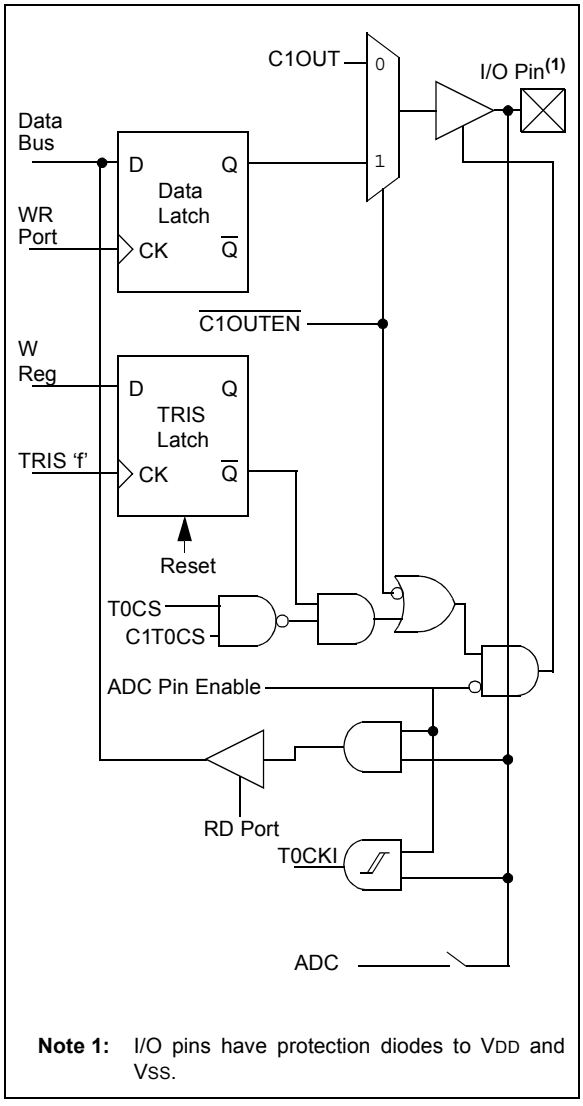

Note 1: I/O pins have protection diodes to VDD and VSS.

FIGURE 5-5: BLOCK DIAGRAM OF RB2

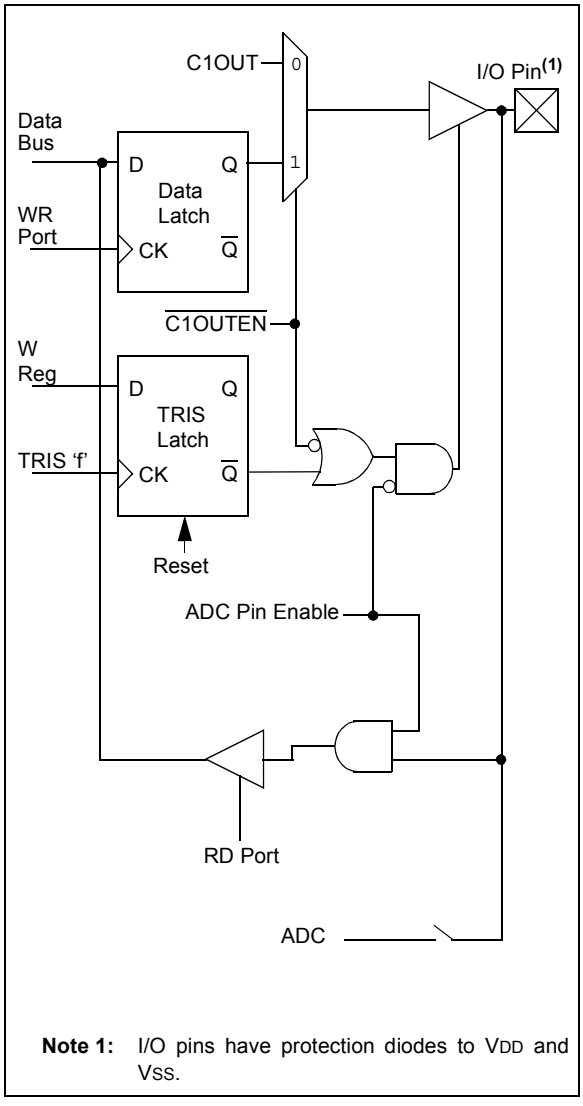

Note 1: I/O pins have protection diodes to VDD and VSS.

FIGURE 5-6: BLOCK DIAGRAM OF RB4

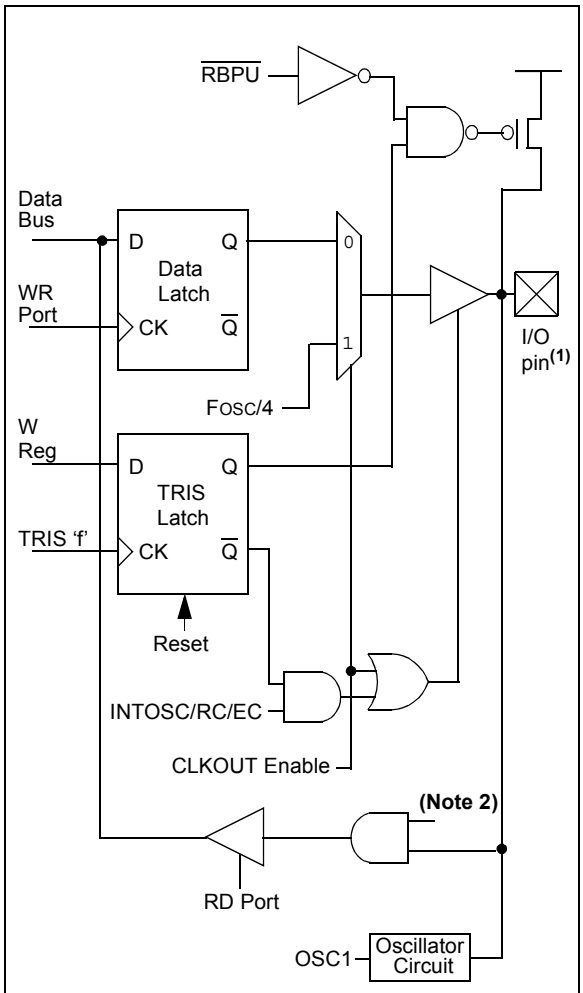

Note 1: I/O pins have protection diodes to VDD and VSS.

2: Input mode is disabled when pin is used for oscillator.

FIGURE 5-7: BLOCK DIAGRAM OF GP4

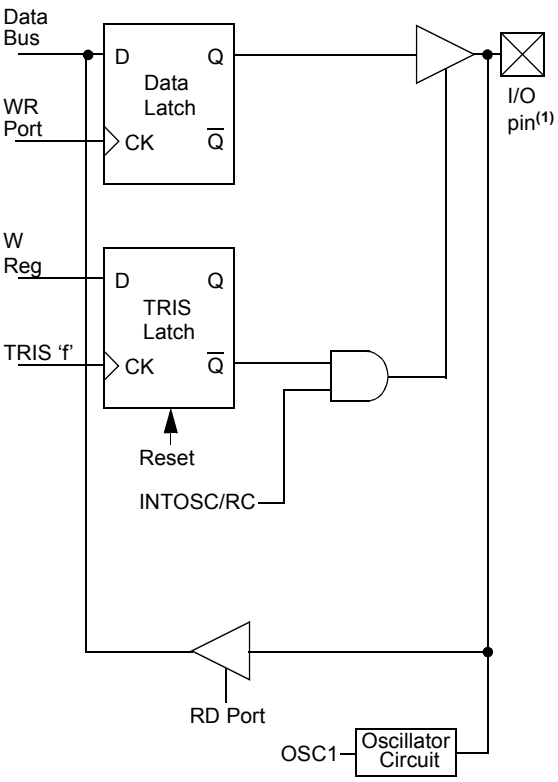

Note 1: I/O pins have protection diodes to VDD and VSS.

© 2007 Microchip Technology Inc.

FIGURE 5-8: BLOCK DIAGRAM OF RB5/GP5

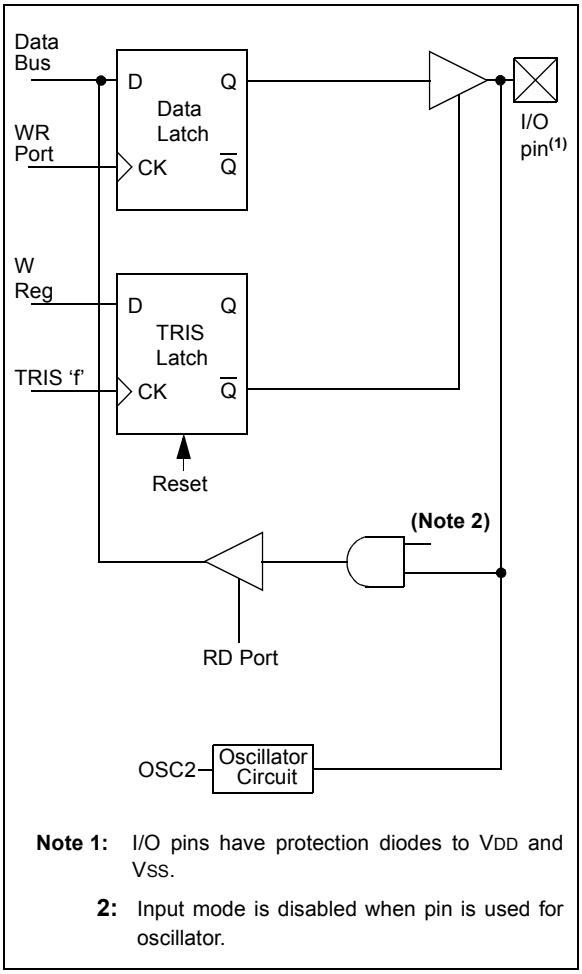

Note 1: I/O pins have protection diodes to VDD and VSS.

2: Input mode is disabled when pin is used for oscillator.

FIGURE 5-9: BLOCK DIAGRAM OF RC0/RC1

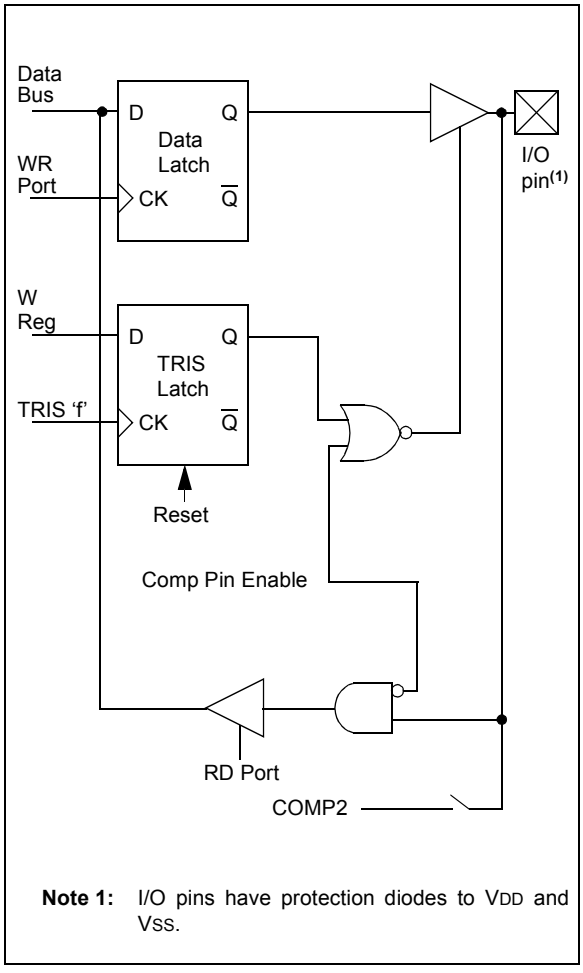

Note 1: I/O pins have protection diodes to VDD and VSS.

FIGURE 5-10: BLOCK DIAGRAM OF RC2

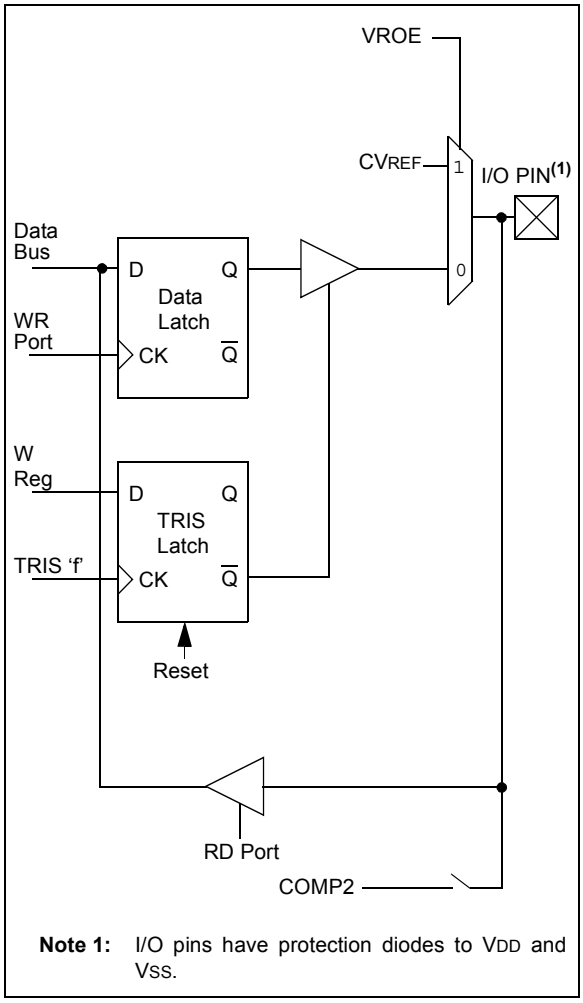

Note 1: I/O pins have protection diodes to VDD and VSS.

FIGURE 5-11: BLOCK DIAGRAM OF RC3

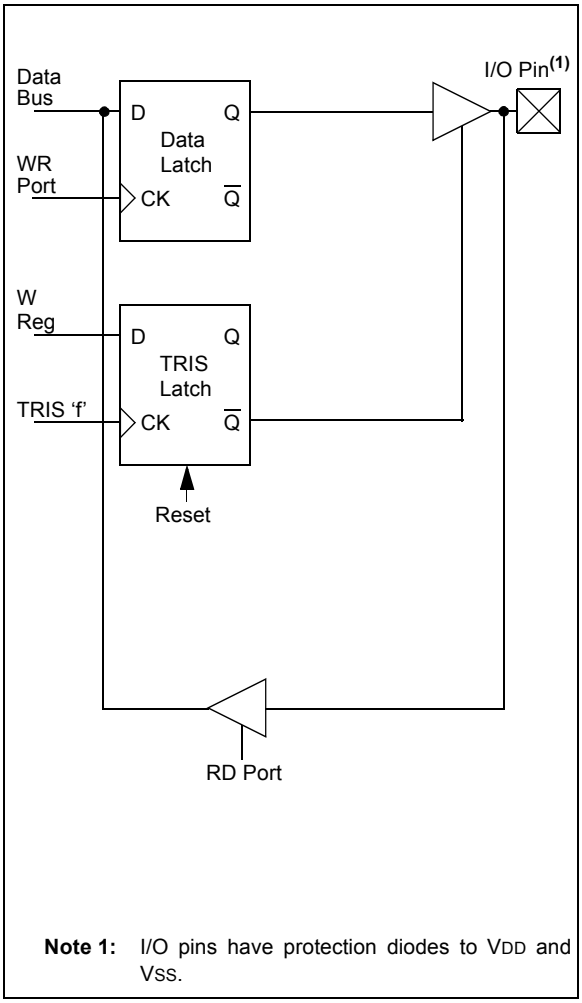

Note 1: I/O pins have protection diodes to VDD and VSS.

© 2007 Microchip Technology Inc.

FIGURE 5-12: BLOCK DIAGRAM OF RC4

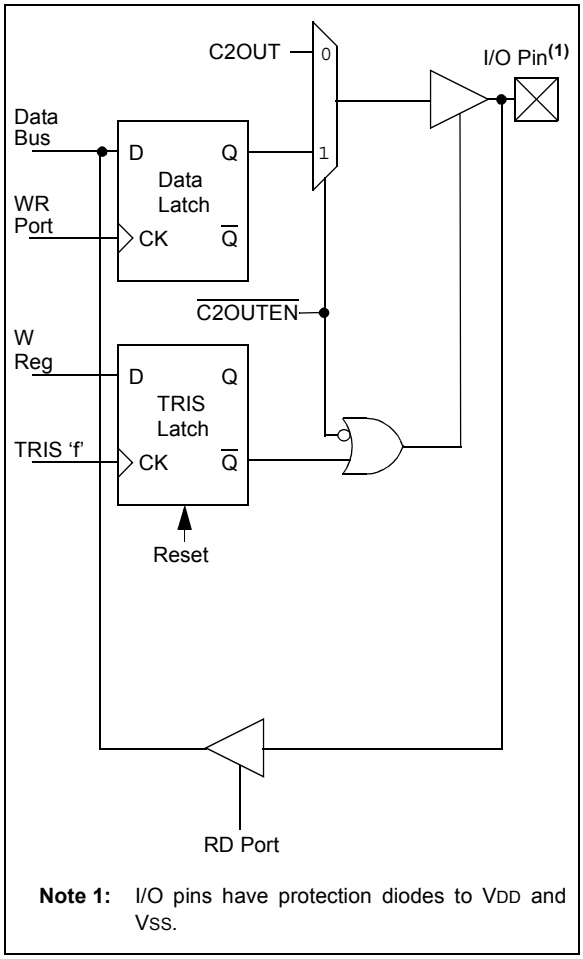

Note 1: I/O pins have protection diodes to VDD and VSS.

FIGURE 5-13: BLOCK DIAGRAM OF RC5

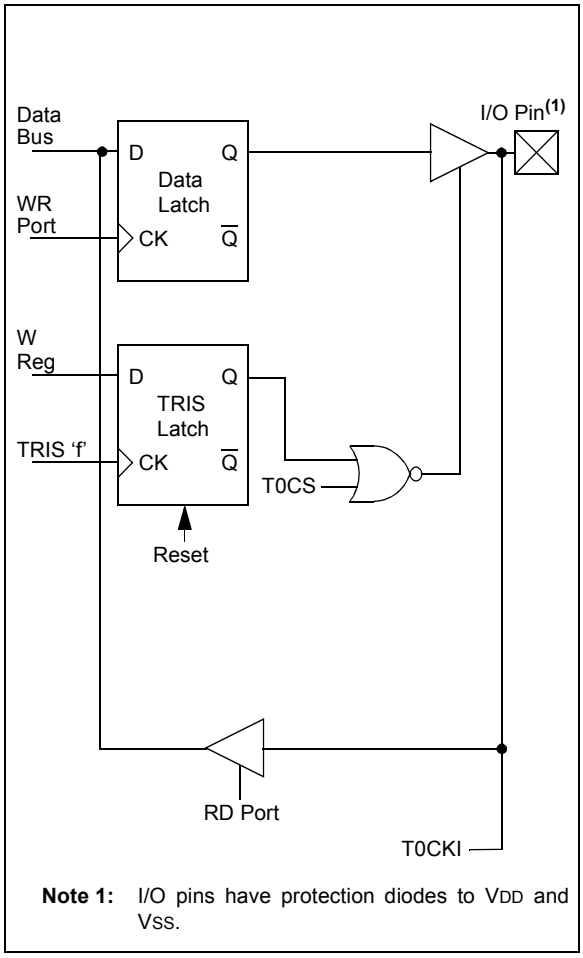

Note 1: I/O pins have protection diodes to VDD and VSS.

TABLE 5-1: SUMMARY OF PORT REGISTERS

Address	Name	Bit 7	Bit 6	Bit 5	Bit 4	Bit 3	Bit 2	Bit 1	Bit 0	Value on Power-On Reset	Value on All Other Resets
N/A	TRISGPIO(1)	—	—	I/O Control Register						--11 1111	--11 1111
N/A	TRISB(2)	—	—	I/O Control Register						--11 1111	--11 1111
N/A	TRISC(2)	—	—	I/O Control Register						--11 1111	--11 1111
N/A	OPTION(1)	$\overline{GPWU}$	$\overline{GPPU}$	T0CS	TOSE	PSA	PS2	PS1	PS0	1111 1111	1111 1111
N/A	OPTION(2)	$\overline{RBWU}$	$\overline{RBPU}$	T0CS	TOSE	PSA	PS2	PS1	PS0	1111 1111	1111 1111
03h	STATUS(1)	GPWUF	CWUF	PA0	$\overline{TO}$	$\overline{PD}$	Z	DC	C	0001 1xxx	qq0q quuu(3)
03h	STATUS(2)	RBWUF	CWUF	PA0	$\overline{TO}$	$\overline{PD}$	Z	DC	C	0001 1xxx	qq0q quuu(3)
06h	GPIO(1)	—	—	GP5	GP4	GP3	GP2	GP1	GP0	--xx xxxx	--uu uuuu
06h	PORTB(2)	—	—	RB5	RB4	RB3	RB2	RB1	RB0	--xx xxxx	--uu uuuu
07h	PORTC(2)	—	—	RC5	RC4	RC3	RC2	RC1	RC0	--xx xxxx	--uu uuuu

Legend: – = unimplemented read as '0', x = unknown, u = unchanged, q = depends on condition.

Note 1: PIC12F510 only.

2: PIC16F506 only.

3: If Reset was due to wake-up on pin change, then bit 7 = 1. All other Resets will cause bit 7 = 0.

TABLE 5-2: I/O PIN FUNCTION ORDER OF PRECEDENCE (PIC16F506)

Priority	RB0	RB1	RB2	RB3	RB4	RB5
1	AN0/C1IN+	AN1/C1IN-	AN2	Input/$\overline{MCLR}$	OSC2/CLKOUT	OSC1/CLKIN
2	TRISB	TRISB	C1OUT	—	TRISB	TRISB
3	—	—	TRISB	—	—	—

TABLE 5-3: I/O PIN FUNCTION ORDER OF PRECEDENCE (PIC16F506)

Priority	RC0	RC1	RC2	RC3	RC4	RC5
1	C2IN+	C2IN-	CV_{REF}	TRISC	C2OUT	T0CKI
2	TRISC	TRISC	TRISC	—	TRISC	TRISC

TABLE 5-4: I/O PIN FUNCTION ORDER OF PRECEDENCE (PIC12F510)

Priority	GP0	GP1	GP2	GP3	GP4	GP5
1	AN0/C1IN+	AN1/C1IN-	AN2	Input/$\overline{MCLR}$	OSC2	OSC1/CLKIN
2	TRISIO	TRISIO	C1OUT	—	TRISIO	TRISIO
3	—	—	T0CKI	—	—	—
4	—	—	TRISIO	—	—	—

© 2007 Microchip Technology Inc.

TABLE 5-5: REQUIREMENTS FOR DIGITAL PIN OPERATION (PIC12F510)

	GP0	GP0	GP1	GP1	GP2	GP2	GP3	GP4	GP5
CM1CON0									
C1ON	0	1	0	1	0	1	—	—	—
C1PREF	—	0	—	1	—	—	—	—	—
C1NREF	—	—	—	0	—	—	—	—	—
$\overline{\text{C1T0CS}}$	—	—	—	—	—	1	—	—	—
$\overline{\text{C1OUTEN}}$	—	—	—	—	—	1	—	—	—
CM2CON0									
C2ON	—	—	—	—	—	—	—	—	—
C2PREF1	—	—	—	—	—	—	—	—	—
C2PREF2	—	—	—	—	—	—	—	—	—
C2NREF	—	—	—	—	—	—	—	—	—
$\overline{\text{C2OUTEN}}$	—	—	—	—	—	—	—	—	—
VRCON0									
VROE	—	—	—	—	—	—	—	—	—
VREN	—	—	—	—	—	—	—	—	—
OPTION									
T0CS	—	—	—	—	—	0	—	—	—
ADCON0									
ANS<1:0>	00, 01	00, 01	00, 01, 10	00, 01, 10	00	00	—	—	—
CONFIG									
MCLRE	—	—	—	—	—	—	—	—	—
INTOSC	—	—	—	—	—	—	—	—	—
LP	—	—	—	—	—	—	—	Disabled	Disabled
EXTRC	—	—	—	—	—	—	—	—	Disabled
XT	—	—	—	—	—	—	—	Disabled	Disabled

Note 1: Multiple column entries for a pin demonstrate the different permutations to arrive at digital functionality for the pin.

2: Shaded cells indicate the bit status does not affect the pins digital functionality.

TABLE 5-6: REQUIREMENTS FOR DIGITAL PIN OPERATION (PIC16F506 PORTB)(1), (2)

	RB0	RB0	RB0	RB1	RB1	RB2	RB2	RB3	RB4	RB5
CM1CON0										
C1ON	—	0	1	0	1	0	1	—	—	—
C1PREF	—	—	0	—	—	—	—	—	—	—
C1NREF	—	—	—	—	0	—	—	—	—	—
$\overline{\text{C1T0CS}}$	—	—	—	—	—	—	—	—	—	—
$\overline{\text{C1OUTEN}}$	—	—	—	—	—	—	1	—	—	—
CM2CON0										
C2ON	1	—	—	—	—	—	—	—	—	—
C2PREF1	0	—	—	—	—	—	—	—	—	—
C2PREF2	1	—	—	—	—	—	—	—	—	—
C2NREF	—	—	—	—	—	—	—	—	—	—
$\overline{\text{C2OUTEN}}$	—	—	—	—	—	—	—	—	—	—
OPTION										
T0CS	—	—	—	—	—	—	—	—	—	—
ADCON0										
ANS<1:0>	00, 01	00, 01	00, 01	00, 01, 10	00, 01, 10	00	00	—	—	—
CONFIG										
MCLRE	—	—	—	—	—	—	—	0	—	—
INTOSC	—	—	—	—	—	—	—	—	—	—
LP	—	—	—	—	—	—	—	—	Disabled	Disabled
EXTRC	—	—	—	—	—	—	—	—	—	Disabled
XT	—	—	—	—	—	—	—	—	Disabled	Disabled
EC	—	—	—	—	—	—	—	—	—	Disabled
HS	—	—	—	—	—	—	—	—	Disabled	Disabled
INTOSC CLKOUT	—	—	—	—	—	—	—	—	Disabled	Disabled
EXTRC CLOCKOUT	—	—	—	—	—	—	—	—	Disabled	Disabled

Note 1: Multiple column entries for a pin demonstrate the different permutations to arrive at digital functionality for the pin.

2: Shaded cells indicate the bit status does not affect the pins digital functionality.

TABLE 5-7: REQUIREMENTS FOR DIGITAL PIN OPERATION (PIC16F506 PORTC)(1), (2)

	RC0	RC0	RC1	RC1	RC2	RC3	RC4	RC4	RC5	RC5
CM2CON0										
C2ON	0	1	0	1	—	—	0	1	—	—
C2PREF1	—	0	—	—	—	—	—	—	—	—
C2PREF2	—	0	—	—	—	—	—	—	—	—
C2NREF	—	—	—	0	—	—	—	—	—	—
$\overline{\text{C2OUTEN}}$	—	—	—	—	—	—	—	1	—	—
VRCON0										
VROE	—	—	—	—	0	—	—	—	—	—
OPTION										
T0CS	—	—	—	—	—	—	—	—	0	—

Note 1: Multiple column entries for a pin demonstrate the different permutations to arrive at digital functionality for the pin.

2: Shaded cells indicate the bit status does not affect the pins digital functionality.

© 2007 Microchip Technology Inc.

5.5 I/O Programming Considerations

5.5.1 BIDIRECTIONAL I/O PORTS

Some instructions operate internally as read followed by write operations. For example, the BCF and BSF instructions read the entire port into the CPU, execute the bit operation and re-write the result. Caution must be used when these instructions are applied to a port where one or more pins are used as input/outputs. For example, a BSF operation on bit 5 of PORTB/GPIO will cause all eight bits of PORTB/GPIO to be read into the CPU, bit 5 to be set and the PORTB/GPIO value to be written to the output latches. If another bit of PORTB/GPIO is used as a bidirectional I/O pin (say bit '0') and it is defined as an input at this time, the input signal present on the pin itself would be read into the CPU and rewritten to the data latch of this particular pin, overwriting the previous content. As long as the pin stays in the Input mode, no problem occurs. However, if bit '0' is switched into Output mode later on, the content of the data latch may now be unknown.

Example 5-1 shows the effect of two sequential Read-Modify-Write instructions (e.g., BCF, BSF, etc.) on an I/O port.

A pin actively outputting a high or a low should not be driven from external devices at the same time in order to change the level on this pin ("wired OR", "wired AND"). The resulting high output currents may damage the chip.

EXAMPLE 5-1: READ-MODIFY-WRITE INSTRUCTIONS ON AN I/O PORT (e.g., PIC16F506)

```
;Initial PORTB Settings
;PORTB<5:3> Inputs
;PORTB<2:0> Outputs
;
;                 PORTB latch  PORTB pins
;                 ----------   ----------
 BCF    PORTB, 5 ;--01 -ppp    --11 pppp
 BCF    PORTB, 4 ;--10 -ppp    --11 pppp
 MOVLW  007h;
 TRIS   PORTB    ;--10 -ppp    --11 pppp
;
```

Note: The user may have expected the pin values to be '--00 pppp'. The 2nd BCF caused RB5 to be latched as the pin value (High).

5.5.2 SUCCESSIVE OPERATIONS ON I/O PORTS

The actual write to an I/O port happens at the end of an instruction cycle. Whereas for reading, the data must be valid at the beginning of the instruction cycle (Figure 5-14). Therefore, care must be exercised if a write followed by a read operation is carried out on the same I/O port. The sequence of instructions should allow the pin voltage to stabilize (load dependent) before the next instruction causes the file to be read into the CPU. Otherwise, the previous state of that pin may be read into the CPU rather than the new state. When in doubt, it is better to separate these instructions with a NOP or another instruction not accessing this I/O port.

FIGURE 5-14: SUCCESSIVE I/O OPERATION (PIC16F506)

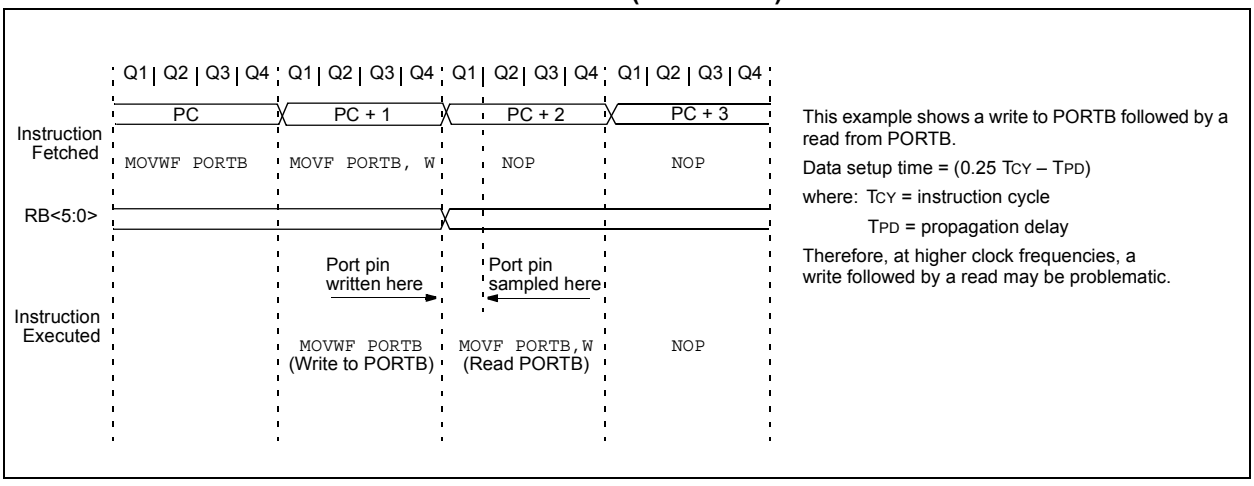

NOTES:

© 2007 Microchip Technology Inc.

6.0 TMR0 MODULE AND TMR0 REGISTER

The Timer0 module has the following features:

- 8-bit timer/counter register, TMR0
- Readable and writable
- 8-bit software programmable prescaler
- Internal or external clock select:
  - Edge select for external clock
  - External clock from either the T0CKI pin or from the output of the comparator

Figure 6-1 is a simplified block diagram of the Timer0 module.

Timer mode is selected by clearing the T0CS bit (OPTION<5>). In Timer mode, the Timer0 module will increment every instruction cycle (without prescaler). If TMR0 register is written, the increment is inhibited for the following two cycles (Figure 6-2 and Figure 6-3). The user can work around this by writing an adjusted value to the TMR0 register.

There are two types of Counter mode. The first Counter mode uses the T0CKI pin to increment Timer0. It is selected by setting the T0CKI bit (OPTION<5>), setting the $\overline{\text{C1T0CS}}$ bit (CM1CON0<4>) and setting the $\overline{\text{C1OUTEN}}$ bit (CM1CON0<6>). In this mode, Timer0 will increment either on every rising or falling edge of pin T0CKI. The T0SE bit (OPTION<4>) determines the source edge. Clearing the T0SE bit selects the rising edge. Restrictions on the external clock input are discussed in detail in **Section 6.1 "Using Timer0 With An External Clock"**.

The second Counter mode uses the output of the comparator to increment Timer0. It can be entered in two different ways. The first way is selected by setting the T0CS bit (OPTION<5>), and clearing the $\overline{\text{C1T0CS}}$ bit (CM1CON0<4>) ($\overline{\text{C1OUTEN}}$ [CM1CON0<6>] does not affect this mode of operation). This enables an internal connection between the comparator and the Timer0.

The second way is selected by setting the T0CS bit (OPTION<5>), setting the $\overline{\text{C1T0CS}}$ bit (CM1CON0) and clearing the $\overline{\text{C1OUTEN}}$ bit (CM1CON0<6>). This allows the output of the comparator onto the T0CKI pin, while keeping the T0CKI input active. Therefore, any comparator change on the COUT pin is fed back into the T0CKI input. The T0SE bit (OPTION<4>) determines the source edge. Clearing the T0SE bit selects the rising edge. Restrictions on the external clock input as discussed in **Section 6.1 "Using Timer0 With An External Clock"**.

The prescaler may be used by either the Timer0 module or the Watchdog Timer, but not both. The prescaler assignment is controlled in software by the control bit PSA (OPTION<3>). Clearing the PSA bit will assign the prescaler to Timer0. The prescaler is not readable or writable. When the prescaler is assigned to the Timer0 module, prescale values of 1:2, 1:4,..., 1:256 are selectable. **Section 6.2 "Prescaler"** details the operation of the prescaler.

A summary of registers associated with the Timer0 module is found in Table 6-1.

FIGURE 6-1: TIMER0 BLOCK DIAGRAM

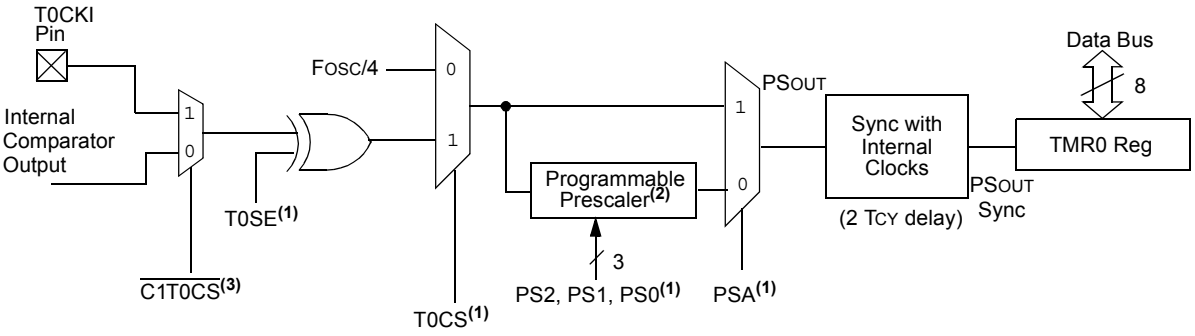

Note 1: Bits T0CS, T0SE, PSA, PS2, PS1 and PS0 are located in the OPTION register.
2: The prescaler is shared with the Watchdog Timer (Figure 6-5).
3: Bit $\overline{\text{C1T0CS}}$ is located in the CM1CON0 register, CM1CON0<4>.

FIGURE 6-2: TIMER0 TIMING: INTERNAL CLOCK/NO PRESCALE

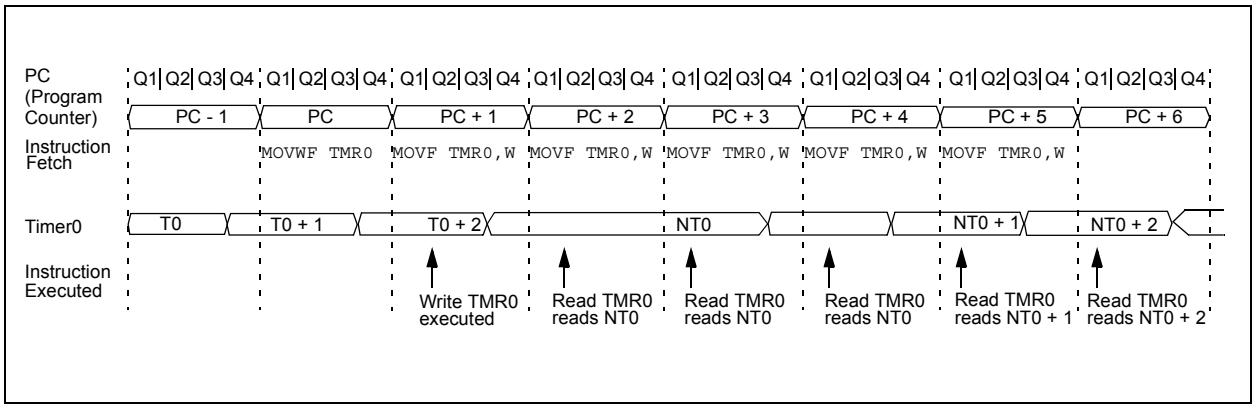

FIGURE 6-3: TIMER0 TIMING: INTERNAL CLOCK/PRESCALE 1:2

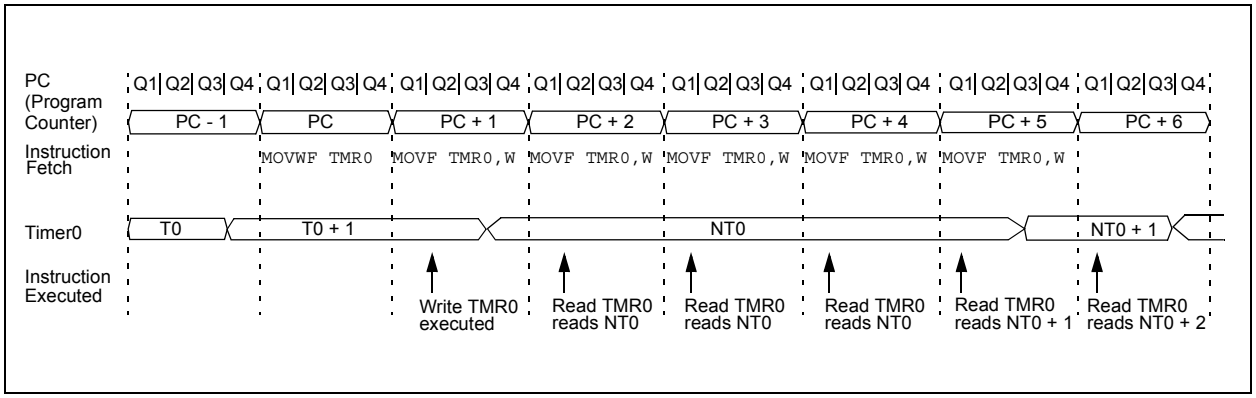

TABLE 6-1: REGISTERS ASSOCIATED WITH TIMER0

Addr	Name	Bit 7	Bit 6	Bit 5	Bit 4	Bit 3	Bit 2	Bit 1	Bit 0	Value on Power-On Reset	Value on All Other Resets
01h	TMR0	Timer0 – 8-bit Real-Time Clock/Counter								xxxx xxxx	uuuu uuuu
07h	CM1CON0(2)	C1OUT	$\overline{\text{C1OUTEN}}$	C1POL	$\overline{\text{C1T0CS}}$	C1ON	C1NREF	C1PREF	$\overline{\text{C1WU}}$	1111 1111	uuuu uuuu
08h	CM1CON0(3)	C1OUT	$\overline{\text{C1OUTEN}}$	C1POL	$\overline{\text{C1T0CS}}$	C1ON	C1NREF	C1PREF	$\overline{\text{C1WU}}$	1111 1111	uuuu uuuu
N/A	OPTION	$\overline{\text{GPWU}}$	$\overline{\text{GPPU}}$	T0CS	T0SE	PSA	PS2	PS1	PS0	1111 1111	1111 1111
N/A	TRISGPIO(1)	—	—	I/O Control Register						---- 1111	--11 1111

Legend: Shaded cells not used by Timer0, – = unimplemented, x = unknown, u = unchanged.

Note 1: The TRIS of the T0CKI pin is overridden when T0CS = 1.

2: For PIC12F510.

3: For PIC16F506.

© 2007 Microchip Technology Inc.

6.1 Using Timer0 With An External Clock

When an external clock input is used for Timer0, it must meet certain requirements. The external clock requirement is due to internal phase clock (TOSC) synchronization. Also, there is a delay in the actual incrementing of Timer0 after synchronization.

6.1.1 EXTERNAL CLOCK SYNCHRONIZATION

When no prescaler is used, the external clock input is the same as the prescaler output. The synchronization of an external clock with the internal phase clocks is accomplished by sampling the prescaler output on the Q2 and Q4 cycles of the internal phase clocks (Figure 6-4). Therefore, it is necessary for T0CKI or the comparator output to be high for at least 2TOSC (and a small RC delay of 2Tt0H) and low for at least 2TOSC (and a small RC delay of 2Tt0H). Refer to the electrical specification of the desired device.

When a prescaler is used, the external clock input is divided by the asynchronous ripple counter-type prescaler, so that the prescaler output is symmetrical. For the external clock to meet the sampling requirement, the ripple counter must be taken into account. Therefore, it is necessary for T0CKI or the comparator output to have a period of at least 4TOSC (and a small RC delay of 4Tt0H) divided by the prescaler value. The only requirement on T0CKI or the comparator output high and low time is that they do not violate the minimum pulse width requirement of Tt0H. Refer to parameters 40, 41 and 42 in the electrical specification of the desired device.

6.1.2 TIMER0 INCREMENT DELAY

Since the prescaler output is synchronized with the internal clocks, there is a small delay from the time the external clock edge occurs to the time the Timer0 module is actually incremented. Figure 6-4 shows the delay from the external clock edge to the timer incrementing.

FIGURE 6-4: TIMER0 TIMING WITH EXTERNAL CLOCK

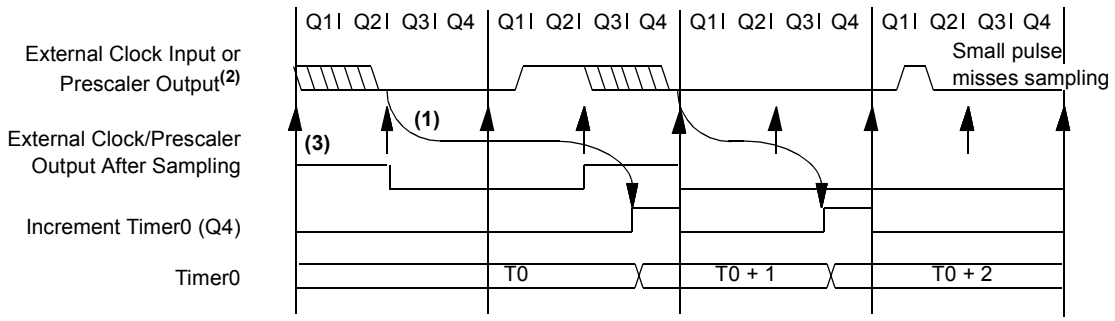

Note 1: Delay from clock input change to Timer0 increment is 3TOSC to 7TOSC. (Duration of Q = TOSC). Therefore, the error in measuring the interval between two edges on Timer0 input = ±4TOSC max.

2: External clock if no prescaler selected; prescaler output otherwise.

3: The arrows indicate the points in time where sampling occurs.

6.2 Prescaler

An 8-bit counter is available as a prescaler for the Timer0 module or as a postscaler for the Watchdog Timer (WDT), respectively (see Figure 10-12). For simplicity, this counter is being referred to as “prescaler” throughout this data sheet.

Note:	The prescaler may be used by either the Timer0 module or the WDT, but not both. Thus, a prescaler assignment for the Timer0 module means that there is no prescaler for the WDT and vice-versa.

The PSA and PS<2:0> bits (OPTION<3:0>) determine prescaler assignment and prescale ratio.

When assigned to the Timer0 module, all instructions writing to the TMR0 register (e.g., `CLRF 1`, `MOVWF 1`, `BSF 1, x`, etc.) will clear the prescaler. When assigned to WDT, a `CLRWDT` instruction will clear the prescaler along with the WDT. The prescaler is neither readable nor writable. On a Reset, the prescaler contains all ‘`0`’s.

6.2.1 SWITCHING PRESCALER ASSIGNMENT

The prescaler assignment is fully under software control (i.e., it can be changed “on-the-fly” during program execution). To avoid an unintended device Reset, the following instruction sequence (Example 6-1) must be executed when changing the prescaler assignment from Timer0 to the WDT.

EXAMPLE 6-1: CHANGING PRESCALER (TIMER0 → WDT)

```
CLRWDT              ;Clear WDT
CLRF   TMR0         ;Clear TMR0 & Prescaler
MOVLW  '00xx1111'b  ;These 3 lines (5, 6, 7)
OPTION              ;are required only if
                    ;desired
CLRWDT              ;PS<2:0> are 000 or 001
MOVLW  '00xx1xxx'b  ;Set Postscaler to
OPTION              ;desired WDT rate
```

To change prescaler from the WDT to the Timer0 module, use the sequence shown in Example 6-2. This sequence must be used even if the WDT is disabled. A CLRWDT instruction should be executed before switching the prescaler.

EXAMPLE 6-2: CHANGING PRESCALER (WDT→TIMER0)

```
CLRWDT              ;Clear WDT and
                    ;prescaler
MOVLW  'xxxx0xxx'   ;Select TMR0, new
                    ;prescale value and
                    ;clock source
OPTION
```

FIGURE 6-5: BLOCK DIAGRAM OF THE TIMER0/WDT PRESCALER

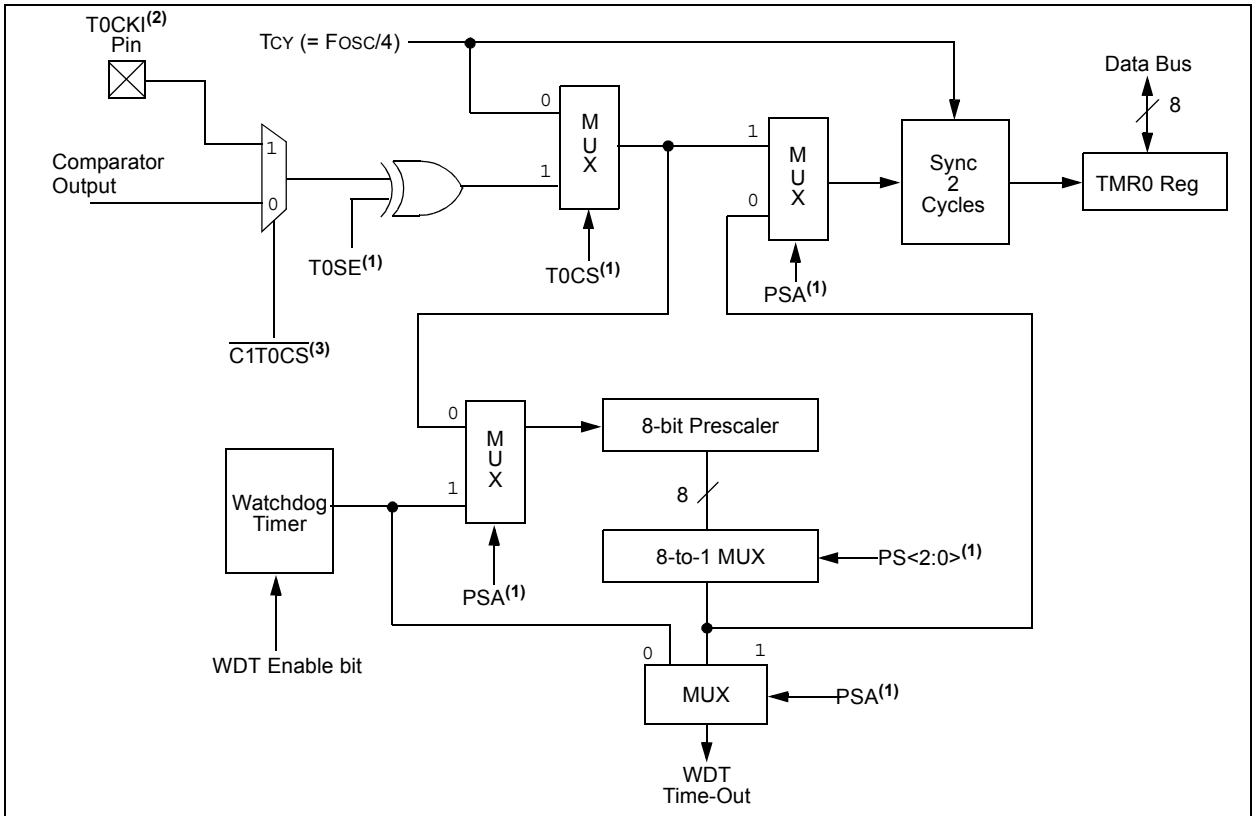

Note 1: T0CS, T0SE, PSA, PS<2:0> are bits in the OPTION register.

2: T0CKI is shared with pin GP2 on the PIC12F510 and shared with RC5 on the PIC16F506.

3: Bit $\overline{C1T0CS}$ is located in the CM1CON0 register.

© 2007 Microchip Technology Inc.

7.0 COMPARATOR(S)

The PIC12F510 contains one analog comparator module. The PIC16F506 contains two comparators and a comparator voltage reference.

REGISTER 7-1: CM1CON0: COMPARATOR C1 CONTROL REGISTER (PIC12F510)

R-1	R/W-1	R/W-1	R/W-1	R/W-1	R/W-1	R/W-1	R/W-1
C1OUT	$\overline{\text{C1OUTEN}}$	C1POL	$\overline{\text{C1T0CS}}$	C1ON	C1NREF	C1PREF	$\overline{\text{C1WU}}$
bit 7							bit 0

Legend:			
R = Readable bit	W = Writable bit	U = Unimplemented bit, read as '0'	
-n = Value at POR	'1' = Bit is set	'0' = Bit is cleared	x = Bit is unknown

bit 7 **C1OUT:** Comparator Output bit
1 = $V_{IN+} > V_{IN-}$
0 = $V_{IN+} < V_{IN-}$

bit 6 **$\overline{\text{C1OUTEN}}$:** Comparator Output Enable bit(1), (2)
1 = Output of comparator is NOT placed on the C1OUT pin
0 = Output of comparator is placed in the C1OUT pin

bit 5 **C1POL:** Comparator Output Polarity bit(2)
1 = Output of comparator is not inverted
0 = Output of comparator is inverted

bit 4 **$\overline{\text{C1T0CS}}$:** Comparator TMR0 Clock Source bit(2)
1 = TMR0 clock source selected by T0CS control bit
0 = Comparator output used as TMR0 clock source

bit 3 **C1ON:** Comparator Enable bit
1 = Comparator is on
0 = Comparator is off

bit 2 **C1NREF:** Comparator Negative Reference Select bit(2)
1 = C1IN- pin
0 = 0.6V internal reference

bit 1 **C1PREF:** Comparator Positive Reference Select bit(2)
1 = C1IN+ pin
0 = C1IN- pin

bit 0 **$\overline{\text{C1WU}}$:** Comparator Wake-up On Change Enable bit(2)
1 = Wake-up On Comparator Change is disabled
0 = Wake-up On Comparator Change is enabled

Note 1: Overrides T0CS bit for TRIS control of RB2.
2: When comparator is turned on, these control bits assert themselves.

REGISTER 7-2: CM1CON0: COMPARATOR C1 CONTROL REGISTER (PIC16F506)

R-1	R/W-1	R/W-1	R/W-1	R/W-1	R/W-1	R/W-1	R/W-1
C1OUT	$\overline{\text{C1OUTEN}}$	C1POL	$\overline{\text{C1T0CS}}$	C1ON	C1NREF	C1PREF	$\overline{\text{C1WU}}$
bit 7							bit 0

Legend:			
R = Readable bit	W = Writable bit	U = Unimplemented bit, read as '0'	
-n = Value at POR	'1' = Bit is set	'0' = Bit is cleared	x = Bit is unknown

bit 7 **C1OUT:** Comparator Output bit
1 = VIN+ > VIN-
0 = VIN+ < VIN-

bit 6 **$\overline{\text{C1OUTEN}}$:** Comparator Output Enable bit(1), (2)
1 = Output of comparator is NOT placed on the C1OUT pin
0 = Output of comparator is placed in the C1OUT pin

bit 5 **C1POL:** Comparator Output Polarity bit(2)
1 = Output of comparator is not inverted
0 = Output of comparator is inverted

bit 4 **$\overline{\text{C1T0CS}}$:** Comparator TMR0 Clock Source bit(2)
1 = TMR0 clock source selected by T0CS control bit
0 = Comparator output used as TMR0 clock source

bit 3 **C1ON:** Comparator Enable bit
1 = Comparator is on
0 = Comparator is off

bit 2 **C1NREF:** Comparator Negative Reference Select bit(2)
1 = C1IN- pin
0 = 0.6V internal reference

bit 1 **C1PREF:** Comparator Positive Reference Select bit(2)
1 = C1IN+ pin
0 = C1IN- pin

bit 0 **$\overline{\text{C1WU}}$:** Comparator Wake-up On Change Enable bit(2)
1 = Wake-up On Comparator Change is disabled
0 = Wake-up On Comparator Change is enabled

Note 1: Overrides T0CS bit for TRIS control of RB2.
2: When comparator is turned on, these control bits assert themselves. Otherwise, the other registers have precedence.

© 2007 Microchip Technology Inc.

REGISTER 7-3: CM2CON0: COMPARATOR C2 CONTROL REGISTER (PIC16F506)

R-1	R/W-1	R/W-1	R/W-1	R/W-1	R/W-1	R/W-1	R/W-1
C2OUT	$\overline{\text{C2OUTEN}}$	C2POL	C2PREF2	C2ON	C2NREF	C2PREF1	$\overline{\text{C2WU}}$
bit 7							bit 0

Legend:			
R = Readable bit	W = Writable bit	U = Unimplemented bit, read as '0'	
-n = Value at POR	'1' = Bit is set	'0' = Bit is cleared	x = Bit is unknown

bit 7 **C2OUT:** Comparator Output bit
1 = $V_{IN+} > V_{IN-}$
0 = $V_{IN+} < V_{IN-}$

bit 6 **$\overline{\text{C2OUTEN}}$:** Comparator Output Enable bit(1), (2)
1 = Output of comparator is NOT placed on the C2OUT pin
0 = Output of comparator is placed in the C2OUT pin

bit 5 **C2POL:** Comparator Output Polarity bit(2)
1 = Output of comparator not inverted
0 = Output of comparator inverted

bit 4 **C2PREF2:** Comparator Positive Reference Select bit(2)
1 = C1IN+ pin
0 = C2IN- pin

bit 3 **C2ON:** Comparator Enable bit
1 = Comparator is on
0 = Comparator is off

bit 2 **C2NREF:** Comparator Negative Reference Select bit(2)
1 = C2IN- pin
0 = CV_{REF}

bit 1 **C2PREF1:** Comparator Positive Reference Select bit(2)
1 = C2IN+ pin
0 = C2PREF2 controls analog input selection

bit 0 **$\overline{\text{C2WU}}$:** Comparator Wake-up on Change Enable bit(2)
1 = Wake-up on Comparator change is disabled
0 = Wake-up on Comparator change is enabled.

Note 1: Overrides TOCS bit for TRIS control of RC4.

2: When comparator is turned on, these control bits assert themselves. Otherwise, the other registers have precedence.

FIGURE 7-1: COMPARATOR 1 BLOCK DIAGRAM FOR PIC12F510/16F506

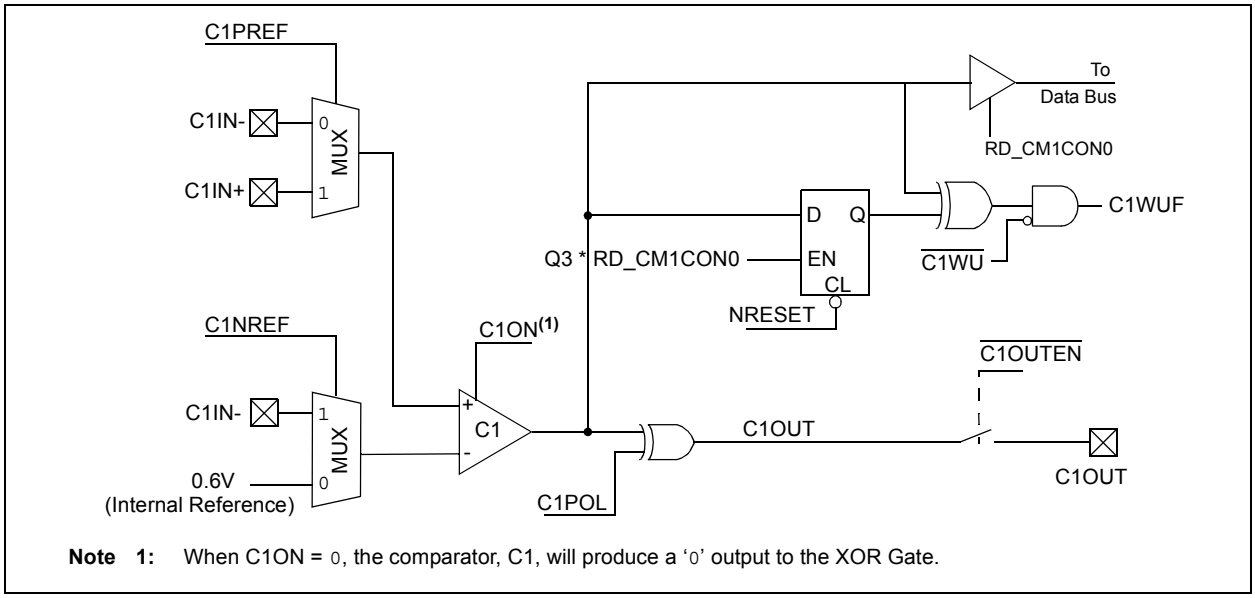

Note 1: When C1ON = 0, the comparator, C1, will produce a '0' output to the XOR Gate.

FIGURE 7-2: COMPARATOR 2 BLOCK DIAGRAM (PIC16F506 ONLY)

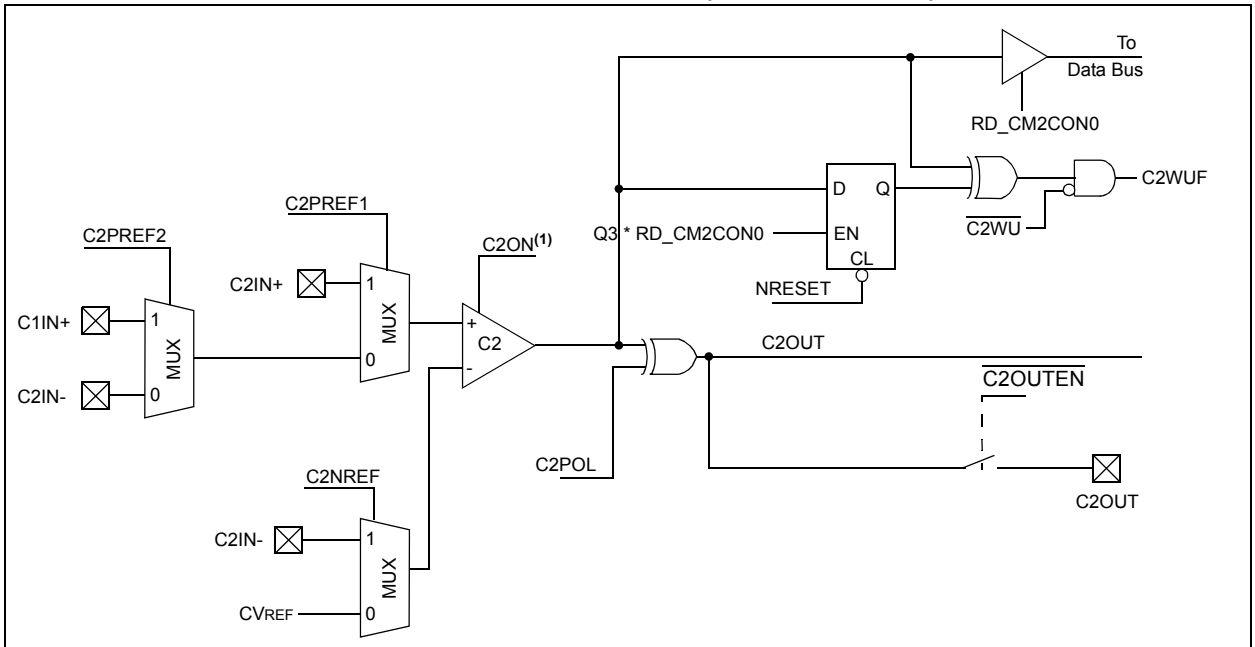

Note 1: When C2ON = 0, the comparator, C2, will produce a '0' output to the XOR Gate.

© 2007 Microchip Technology Inc.

7.1 Comparator Operation

A single comparator is shown in Figure 7-3 along with the relationship between the analog input levels and the digital output. When the analog input at VIN+ is less than the analog input VIN-, the output of the comparator is a digital low level. The shaded area of the output of the comparator in Figure 7-3 represent the uncertainty due to input offsets and response time. See Table 13-1 for Common Mode Voltage.

FIGURE 7-3: SINGLE COMPARATOR

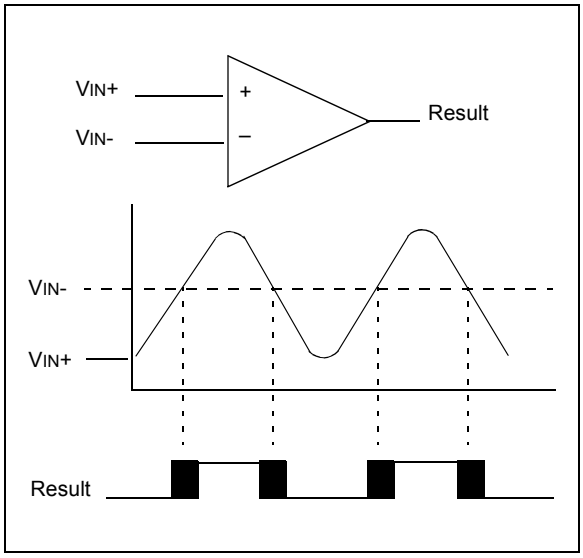

7.2 Comparator Reference

An internal reference signal may be used depending on the comparator operating mode. The analog signal that is present at VIN- is compared to the signal at VIN+, and the digital output of the comparator is adjusted accordingly (Figure 7-3). Please see **Section 8.0 "Comparator Voltage Reference Module (PIC16F506 only)"** for internal reference specifications.

7.3 Comparator Response Time

Response time is the minimum time after selecting a new reference voltage or input source before the comparator output is to have a valid level. If the comparator inputs are changed, a delay must be used to allow the comparator to settle to its new state. Please see Table 13-1 for comparator response time specifications.

7.4 Comparator Output

The comparator output is read through the CM1CON0 or CM2CON0 register. This bit is read-only. The comparator output may also be used externally, see Figure 7-3.

Note:	Analog levels on any pin that is defined as a digital input may cause the input buffer to consume more current than is specified.

7.5 Comparator Wake-up Flag

The Comparator Wake-up Flag is set whenever all of the following conditions are met:

- $\overline{C1WU}$ = 0 (CM1CON0<0>) or $\overline{C2WU}$ = 0 (CM2CON0<0>)
- CM1CON0 or CM2CON0 has been read to latch the last known state of the C1OUT and C2OUT bit (`MOVF CM1CON0, W`)
- Device is in Sleep
- The output of a comparator has changed state

The wake-up flag may be cleared in software or by another device Reset.

7.6 Comparator Operation During Sleep

When the comparator is enabled it is active. To minimize power consumption while in Sleep mode, turn off the comparator before entering Sleep.

7.7 Effects of Reset

A Power-on Reset (POR) forces the CM2CON0 register to its Reset state. This forces the Comparator input pins to analog Reset mode. Device current is minimized when analog inputs are present at Reset time.

7.8 Analog Input Connection Considerations

A simplified circuit for an analog input is shown in Figure 7-4. Since the analog pins are connected to a digital output, they have reverse biased diodes to VDD and VSS. The analog input, therefore, must be between VSS and VDD. If the input voltage deviates from this range by more than 0.6V in either direction, one of the diodes is forward biased and a latch-up may occur. A maximum source impedance of 10 kΩ is recommended for the analog sources. Any external component connected to an analog input pin, such as a capacitor or a Zener diode, should have very little leakage current.

FIGURE 7-4: ANALOG INPUT MODE

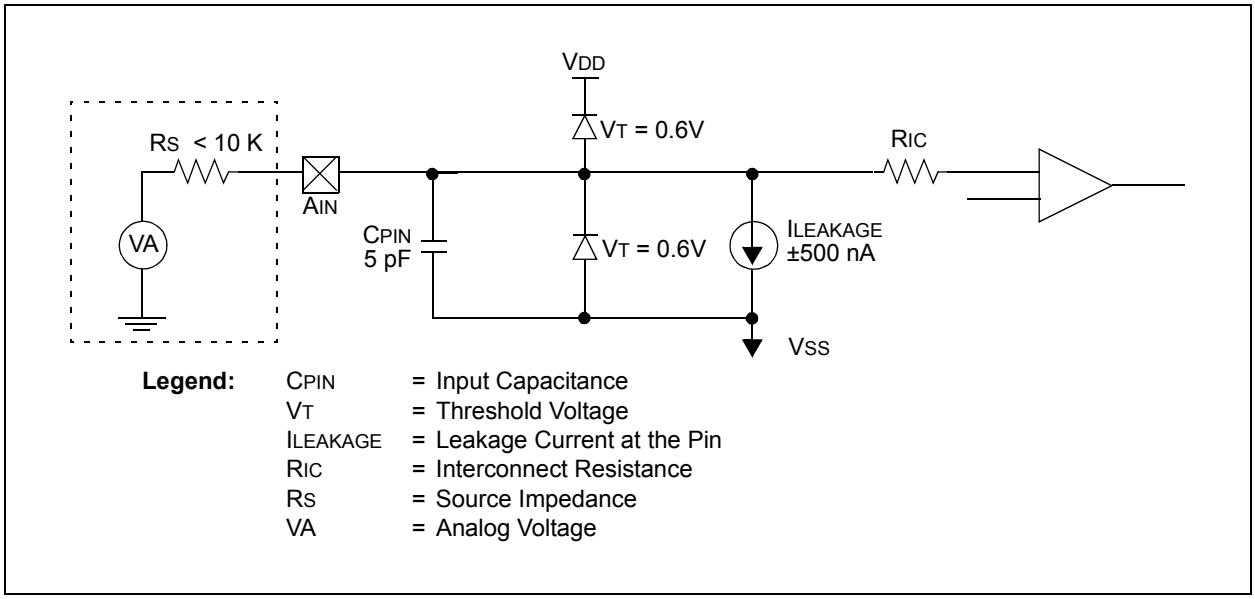

TABLE 7-1: REGISTERS ASSOCIATED WITH COMPARATOR MODULE

Add	Name	Bit 7	Bit 6	Bit 5	Bit 4	Bit 3	Bit 2	Bit 1	Bit 0	Value on POR	Value on All Other Resets
03h	STATUS	GPWUF	CWUF	PA0	$\overline{TO}$	$\overline{PD}$	Z	DC	C	0001 1xxx	qq0q quuu
07h	CM1CON0(1)	C1OUT	$\overline{C1OUTEN}$	C1POL	$\overline{C1T0CS}$	C1ON	C1NREF	C1PREF	$\overline{C1WU}$	1111 1111	uuuu uuuu
08h	CM1CON0(2)	C1OUT	$\overline{C1OUTEN}$	C1POL	$\overline{C1T0CS}$	C1ON	C1NREF	C1PREF	$\overline{C1WU}$	1111 1111	uuuu uuuu
0Bh	CM2CON0(2)	C2OUT	$\overline{C2OUTEN}$	C2POL	C2PREF2	C2ON	C2NREF	C2PREF1	$\overline{C2WU}$	1111 1111	uuuu uuuu
N/A	TRISB(2)	—	—	I/O Control Register						--11 1111	--11 1111
N/A	TRISC(2)	—	—	I/O Control Register						--11 1111	--11 1111
N/A	TRISGPIO(1)	—	—	I/O Control Register						--11 1111	--11 1111

Legend: x = Unknown, u = Unchanged, – = Unimplemented, read as '0', q = Depends on condition.
Note 1: PIC12F510 only.
2: PIC16F506 only.

© 2007 Microchip Technology Inc.

8.0 COMPARATOR VOLTAGE REFERENCE MODULE (PIC16F506 ONLY)

The comparator voltage reference module also allows the selection of an internally generated voltage reference for one of the C2 comparator inputs. The VRCON register (Register 8-1) controls the voltage reference module shown in Figure 8-1.

8.1 Configuring The Voltage Reference

The voltage reference can output 32 voltage levels; 16 in a high range and 16 in a low range.

Equation 8-1 determines the output voltages:

EQUATION 8-1:

VRR = 1 (low range): $CV_{REF} = (VR<3:0>/24) \times V_{DD}$

VRR = 0 (high range):

$$CV_{REF} = (V_{DD}/4) + (VR<3:0> \times V_{DD}/32)$$

8.2 Voltage Reference Accuracy/Error

The full range of V_{SS} to V_{DD} cannot be realized due to construction of the module. The transistors on the top and bottom of the resistor ladder network (Figure 8-1) keep CV_{REF} from approaching V_{SS} or V_{DD}. The exception is when the module is disabled by clearing the VREN bit (VRCON<7>). When disabled, the reference voltage is V_{SS} when VR<3:0> is '0000' and the VRR (VRCON<5>) bit is set. This allows the comparator to detect a zero-crossing and not consume the CV_{REF} module current.

The voltage reference is V_{DD} derived and, therefore, the CV_{REF} output changes with fluctuations in V_{DD}. The tested absolute accuracy of the comparator voltage reference can be found in **Section 13.2 "DC Characteristics: PIC12F510/16F506 (Extended)"**.

REGISTER 8-1: VRCON: VOLTAGE REFERENCE CONTROL REGISTER (PIC16F506 ONLY)

R/W-0	R/W-0	R/W-1	U-1	R/W-1	R/W-1	R/W-1	R/W-1
VREN	VROE	VRR	—	VR3	VR2	VR1	VR0
bit 7							bit 0

Legend:			
R = Readable bit	W = Writable bit	U = Unimplemented bit, read as '0', except if denoted otherwise	
-n = Value at POR	'1' = Bit is set	'0' = Bit is cleared	x = Bit is unknown

bit 7 **VREN:** CV_{REF} Enable bit
- 1 = CV_{REF} is powered on
- 0 = CV_{REF} is powered down, no current is drawn

bit 6 **VROE:** CV_{REF} Output Enable bit(1)
- 1 = CV_{REF} output is enabled
- 0 = CV_{REF} output is disabled

bit 5 **VRR:** CV_{REF} Range Selection bit
- 1 = Low range
- 0 = High range

bit 4 **Unimplemented:** Read as '1'

bit 3-0 **VR<3:0>** CV_{REF} Value Selection bit

When VRR = 1: $CV_{REF} = (VR<3:0>/24)*V_{DD}$

When VRR = 0: $CV_{REF} = V_{DD}/4+(VR<3:0>/32)*V_{DD}$

Note 1: When this bit is set, the TRIS for the CV_{REF} pin is overridden and the analog voltage is placed on the CV_{REF} pin.

2: CV_{REF} controls for ratio metric reference applies to Comparator 2 on the PIC16F506 only.

FIGURE 8-1: COMPARATOR VOLTAGE REFERENCE BLOCK DIAGRAM

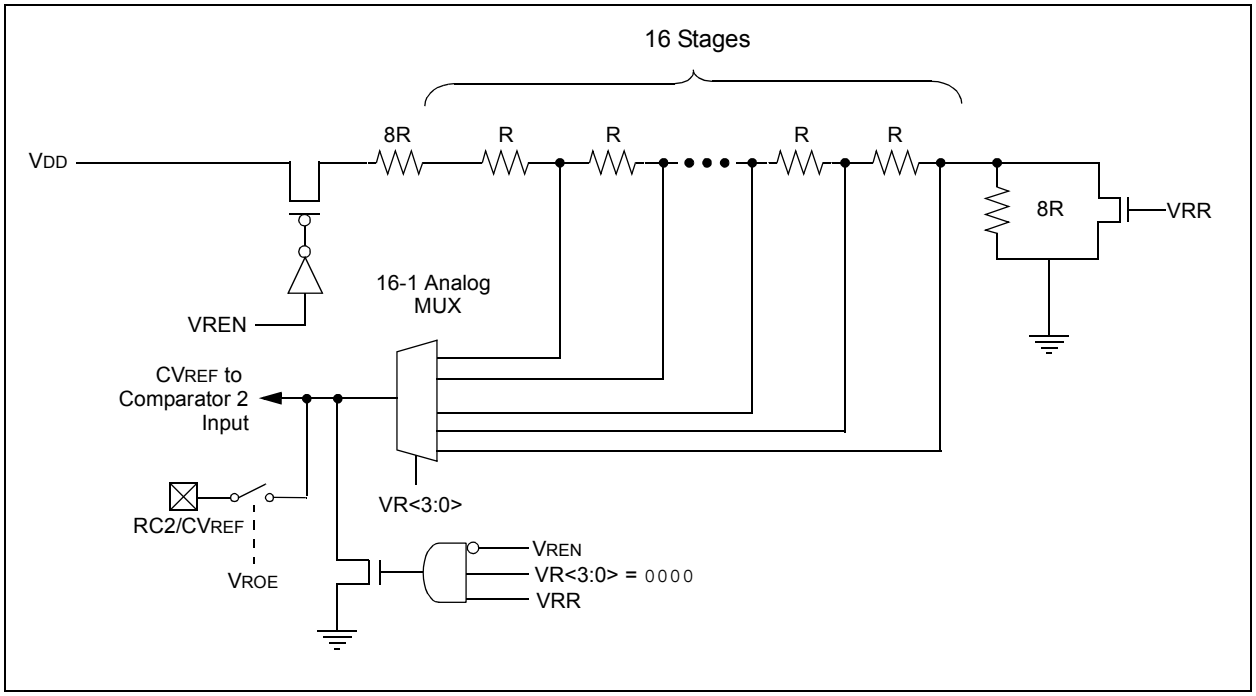

TABLE 8-1: REGISTERS ASSOCIATED WITH COMPARATOR VOLTAGE REFERENCE

Add	Name	Bit 7	Bit 6	Bit 5	Bit 4	Bit 3	Bit 2	Bit 1	Bit 0	Value on POR	Value on all other Resets
0Ch	VRCON	VREN	VROE	VRR	—	VR3	VR2	VR1	VR0	001- 1111	001- 1111
08h	CM1CON0(1)	C1OUT	$\overline{\text{C1OUTEN}}$	C1POL	$\overline{\text{C1T0CS}}$	C1ON	C1NREF	C1PREF	$\overline{\text{C1WU}}$	1111 1111	uuuu uuuu
0Bh	CM2CON0(1)	C2OUT	$\overline{\text{C2OUTEN}}$	C2POL	C2PREF2	C2ON	C2NREF	C2PREF1	$\overline{\text{C2WU}}$	1111 1111	uuuu uuuu

Legend: x = unknown, u = unchanged, – = unimplemented, read as '0'.
Note 1: PIC16F506 only.

© 2007 Microchip Technology Inc.

9.0 ANALOG-TO-DIGITAL (A/D) CONVERTER

The A/D Converter allows conversion of an analog signal into an 8-bit digital signal.

9.1 Clock Divisors

The ADC has 4 clock source settings ADCS<1:0>. There are 3 divisor values 16, 8 and 4. The fourth setting is INTOSC with a divisor of 4. These settings will allow a proper conversion when using an external oscillator at speeds from 20 MHz to 350 kHz. Using an external oscillator at a frequency below 350 kHz (TAD > 50 μs) requires the ADC oscillator setting to be INTOSC/4 for valid ADC results.

The ADC requires 13 TAD periods to complete a conversion. The divisor values do not affect the number of TAD periods required to perform a conversion. The divisor values determine the length of the TAD period.

When the ADCS<1:0> bits are changed while an ADC conversion is in process, the new ADC clock source will not be selected until the next conversion is started. This clock source selection will be lost when the device enters Sleep.

9.1.1 VOLTAGE REFERENCE

There is no external voltage reference for the ADC. The ADC reference voltage will always be VDD.

9.1.2 ANALOG MODE SELECTION

The ANS<1:0> bits are used to configure pins for analog input. Upon any Reset, ANS<1:0> defaults to 11. This configures pins AN0, AN1 and AN2 as analog inputs. Pins configured as analog inputs are not available for digital output. Users should not change the ANS bits while a conversion is in process. ANS bits are active regardless of the condition of ADON.

9.1.3 ADC CHANNEL SELECTION

The CHS bits are used to select the analog channel to be sampled by the ADC. The CHS<1:0> bits can be changed at any time without adversely effecting a conversion. To acquire an analog signal the CHS<1:0> selection must match one of the pin(s) selected by the ANS<1:0> bits. When the ADC is on (ADON = 1) and a channel is selected that is also being used by the comparator, then both the comparator and the ADC will see the analog voltage on the pin.

Note:	It is the users responsibility to ensure that use of the ADC and comparator simultaneously on the same pin, does not adversely affect the signal being monitored or adversely effect device operation.

When the CHS<1:0> bits are changed during an ADC conversion, the new channel will not be selected until the current conversion is completed. This allows the current conversion to complete with valid results. All channel selection information will be lost when the device enters Sleep.

TABLE 9-1: CHANNEL SELECT (ADCS) BITS AFTER AN EVENT

Event	ADCS<1:0>
$\overline{\text{MCLR}}$	11
Conversion completed	CS<1:0>
Conversion terminated	CS<1:0>
Power-on	11
Wake from Sleep	11

9.1.4 THE GO/$\overline{\text{DONE}}$ BIT

The GO/$\overline{\text{DONE}}$ bit is used to determine the status of a conversion, to start a conversion and to manually halt a conversion in process. Setting the GO/$\overline{\text{DONE}}$ bit starts a conversion. When the conversion is complete, the ADC module clears the GO/$\overline{\text{DONE}}$ bit. A conversion can be terminated by manually clearing the GO/$\overline{\text{DONE}}$ bit while a conversion is in process. Manual termination of a conversion may result in a partially converted result in ADRES.

The GO/$\overline{\text{DONE}}$ bit is cleared when the device enters Sleep, stopping the current conversion. The ADC does not have a dedicated oscillator, it runs off of the instruction clock. Therefore, no conversion can occur in sleep.

The GO/$\overline{\text{DONE}}$ bit cannot be set when ADON is clear.

9.1.5 SLEEP

This ADC does not have a dedicated ADC clock, and therefore, no conversion in Sleep is possible. If a conversion is underway and a Sleep command is executed, the GO/$\overline{\text{DONE}}$ and ADON bit will be cleared. This will stop any conversion in process and power-down the ADC module to conserve power. Due to the nature of the conversion process, the ADRES may contain a partial conversion. At least 1 bit must have been converted prior to Sleep to have partial conversion data in ADRES. The ADCS and CHS bits are reset to their default condition; ANS<1:0> = 11 and CHS<1:0> = 11.

- For accurate conversions, TAD must meet the following:
- 500 ns < TAD < 50 µs
- TAD = 1/(FOSC/divisor)

Shaded areas indicate TAD out of range for accurate conversions. If analog input is desired at these frequencies, use INTOSC/4 for the ADC clock source.

TABLE 9-2: TAD FOR ADCS SETTINGS WITH VARIOUS OSCILLATORS

Source	ADCS <1:0>	Divisor	20(1) MHz	16(1) MHz	8 MHz	4 MHz	1 MHz	500 kHz	350 kHz	200 kHz	100 kHz	32 kHz
INTOSC	11	4	—	—	.5 µs	1 µs	—	—	—	—	—	—
FOSC	10	4	.2 µs	.25 µs	.5 µs	1 µs	4 µs	8 µs	11 µs	20 µs	40 µs	125 µs
FOSC	01	8	.4 µs	.5 µs	1 µs	2 µs	8 µs	16 µs	23 µs	40 µs	80 µs	250 µs
FOSC	00	16	.8 µs	1 µs	2 µs	4 µs	16 µs	32 µs	46 µs	80 µs	160 µs	500 µs

Note 1: When operating with external oscillator frequencies of 16 MHz or higher, better ADC performance will result from selection of a suitable FOSC divisor value from Table 9-2 than from use of the INTOSC/4 option for the ADC clock.

TABLE 9-3: EFFECTS OF SLEEP ON ADCON0

	ANS1	ANS0	ADCS1	ADCS0	CHS1	CHS0	GO/$\overline{\text{DONE}}$	ADON
Entering Sleep	Unchanged	Unchanged	1	1	1	1	0	0
Wake or Reset	1	1	1	1	1	1	0	0

© 2007 Microchip Technology Inc.

9.1.6 ANALOG CONVERSION RESULT REGISTER

The ADRES register contains the results of the last conversion. These results are present during the sampling period of the next analog conversion process. After the sampling period is over, ADRES is cleared (= 0). A 'leading one' is then right shifted into the ADRES to serve as an internal conversion complete bit. As each bit weight, starting with the MSB, is converted, the leading one is shifted right and the converted bit is stuffed into ADRES. After a total of 9 right shifts of the 'leading one' have taken place, the conversion is complete; the 'leading one' has been shifted out and the GO/$\overline{\text{DONE}}$ bit is cleared.

If the GO/$\overline{\text{DONE}}$ bit is cleared in software during a conversion, the conversion stops. The data in ADRES is the partial conversion result. This data is valid for the bit weights that have been converted. The position of the 'leading one' determines the number of bits that have been converted. The bits that were not converted before the GO/$\overline{\text{DONE}}$ was cleared are unrecoverable.

REGISTER 9-1: ADCON0: A/D CONTROL REGISTER (PIC12F510)

R/W-1	R/W-1	R/W-1	R/W-1	R/W-1	R/W-1	R/W-0	R/W-0
ANS1	ANS0	ADCS1	ADCS0	CHS1	CHS0	GO/$\overline{\text{DONE}}$	ADON
bit 7							bit 0

Legend:			
R = Readable bit	W = Writable bit	U = Unimplemented bit, read as '0'	
-n = Value at POR	'1' = Bit is set	'0' = Bit is cleared	x = Bit is unknown

bit 7-6 **ANS<1:0>:** ADC Analog Input Pin Select bits[1), (2)]
- 00 = No pins configured for analog input
- 01 = AN2 configured as an analog input
- 10 = AN2 and AN0 configured as analog inputs
- 11 = AN2, AN1 and AN0 configured as analog inputs

bit 5-4 **ADCS<1:0>:** ADC Conversion Clock Select bits
- 00 = FOSC/16
- 01 = FOSC/8
- 10 = FOSC/4
- 11 = INTOSC/4

bit 3-2 **CHS<1:0>:** ADC Channel Select bits
- 00 = Channel AN0
- 01 = Channel AN1
- 10 = Channel AN2
- 11 = 0.6V absolute voltage reference

bit 1 **GO/$\overline{\text{DONE}}$:** ADC Conversion Status bit[(4)]
- 1 = ADC conversion in progress. Setting this bit starts an ADC conversion cycle. This bit is automatically cleared by hardware when the ADC is done converting.
- 0 = ADC conversion completed/not in progress. Manually clearing this bit while a conversion is in process terminates the current conversion.

bit 0 **ADON:** ADC Enable bit
- 1 = ADC module is operating
- 0 = ADC module is shut-off and consumes no power

Note 1: When the ANS bits are set, the channels selected will automatically be forced into Analog mode, regardless of the pin function previously defined. The only exception to this is the comparator, where the analog input to the comparator and the ADC will be active at the same time. It is the users responsibility to ensure that the ADC loading on the comparator input does not affect their application.

2: The ANS<1:0> bits are active regardless of the condition of ADON.

3: CHS<1:0> bits default to 11 after any Reset.

4: If the ADON bit is clear, the GO/$\overline{\text{DONE}}$ bit cannot be set.

REGISTER 9-2: ADRES REGISTER

R-X	R-X	R-X	R-X	R-X	R-X	R-X	R-X
ADRES7	ADRES6	ADRES5	ADRES4	ADRES3	ADRES2	ADRES1	ADRES0
bit 7							bit 0

Legend:			
R = Readable bit	W = Writable bit	U = Unimplemented bit, read as '0'	
-n = Value at POR	'1' = Bit is set	'0' = Bit is cleared	x = Bit is unknown

EXAMPLE 9-1: PERFORMING AN ANALOG-TO-DIGITAL CONVERSION

```
;Sample code operates out of BANK0
        MOVLW 0xF1     ;configure A/D
        MOVWF ADCON0
        BSF ADCON0, 1  ;start conversion
loop0   BTFSC ADCON0, 1;wait for 'DONE'
        GOTO loop0
        MOVF ADRES, W  ;read result
        MOVWF result0  ;save result

        BSF ADCON0, 2  ;setup for read of
                       ;channel 1
        BSF ADCON0, 1  ;start conversion
loop1   BTFSC ADCON0, 1;wait for 'DONE'
        GOTO loop1
        MOVF ADRES, W  ;read result
        MOVWF result1  ;save result

        BSF ADCON0, 3  ;setup for read of
        BCF ADCON0, 2  ;channel 2
        BSF ADCON0, 1  ;start conversion
loop2   BTFSC ADCON0, 1;wait for 'DONE'
        GOTO loop2
        MOVF ADRES, W  ;read result
        MOVWF result2  ;save result
```

EXAMPLE 9-2: CHANNEL SELECTION CHANGE DURING CONVERSION

```
        MOVLW 0xF1     ;configure A/D
        MOVWF ADCON0
        BSF ADCON0, 1  ;start conversion
        BSF ADCON0, 2  ;setup for read of
                       ;channel 1
loop0   BTFSC ADCON0, 1;wait for 'DONE'
        GOTO loop0
        MOVF ADRES, W  ;read result
        MOVWF result0  ;save result

        BSF ADCON0, 1  ;start conversion
        BSF ADCON0, 3  ;setup for read of
        BCF ADCON0, 2  ;channel 2
loop1   BTFSC ADCON0, 1;wait for 'DONE'
        GOTO loop1
        MOVF ADRES, W  ;read result
        MOVWF result1  ;save result

        BSF ADCON0, 1  ;start conversion
loop2   BTFSC ADCON0, 1;wait for 'DONE'
        GOTO loop2
        MOVF ADRES, W  ;read result
        MOVWF result2  ;save result
        CLRF ADCON0    ;optional: returns
        ;pins to Digital mode and turns off
        ;the ADC module
```


© 2007 Microchip Technology Inc.

10.0 SPECIAL FEATURES OF THE CPU

What sets a microcontroller apart from other processors are special circuits that deal with the needs of real-time applications. The PIC12F510/16F506 microcontrollers have a host of such features intended to maximize system reliability, minimize cost through elimination of external components, provide power-saving operating modes and offer code protection. These features are:

- Oscillator Selection
- Reset:
  - Power-on Reset (POR)
  - Device Reset Timer (DRT)
  - Wake-up from Sleep on Pin Change
- Watchdog Timer (WDT)
- Sleep
- Code Protection
- ID Locations
- In-Circuit Serial Programming™ (ICSP™)
- Clock Out

The PIC12F510/16F506 devices have a Watchdog Timer, which can be shut off only through Configuration bit WDTE. It runs off of its own RC oscillator for added reliability. If using HS (PIC16F506), XT or LP selectable oscillator options, there is always a delay, provided by the Device Reset Timer (DRT), intended to keep the chip in Reset until the crystal oscillator is stable. If using INTOSC, EXTRC or EC there is an 1.125 ms (nominal) delay only on V_{DD} power-up. With this timer on-chip, most applications need no external Reset circuitry.

The Sleep mode is designed to offer a very low-current Power-Down mode. The user can wake-up from Sleep through a change-on-input pin or through a Watchdog Timer time-out. Several oscillator options are also made available to allow the part to fit the application, including an internal 4/8 MHz oscillator. The EXTRC oscillator option saves system cost while the LP crystal option saves power. A set of Configuration bits are used to select various options.

10.1 Configuration Bits

The PIC12F510/16F506 Configuration Words consist of 12 bits. Configuration bits can be programmed to select various device configurations. Three bits are for the selection of the oscillator type; (two bits on the PIC12F510), one bit is the Watchdog Timer enable bit, one bit is the $\overline{MCLR}$ enable bit and one bit is for code protection (Register 10-1, Register 10-2).

REGISTER 10-1: CONFIG: CONFIGURATION WORD REGISTER (PIC12F510)(1)

—	—	—	—	—	—	—	—
bit 15							bit 8

—	—	IOSCFS	MCLRE	$\overline{CP}$	WDTE	FOSC1	FOSC0
bit 7							bit 0

bit 15-6 **Unimplemented**: Read as '1'

bit 5 **IOSCFS:** Internal Oscillator Frequency Select bit
1 = 8 MHz INTOSC speed
0 = 4 MHz INTOSC speed

bit 4 **MCLRE:** Master Clear Enable bit
1 = GP3/$\overline{MCLR}$ pin functions as $\overline{MCLR}$
0 = GP3/$\overline{MCLR}$ pin functions as GP3, $\overline{MCLR}$ internally tied to V_{DD}

bit 3 **$\overline{CP}$:** Code Protection bit
1 = Code protection off
0 = Code protection on

bit 2 **WDTE:** Watchdog Timer Enable bit
1 = WDT enabled
0 = WDT disabled

bit 1-0 **FOSC<1:0>:** Oscillator Selection bits
00 = LP oscillator with 18 ms DRT
01 = XT oscillator with 18 ms DRT
10 = INTOSC with 1.125 ms DRT (2)
11 = EXTRC with 1.125 ms DRT (2)

Note 1: Refer to the "*PIC12F510 Memory Programming Specification*" (DS41257) to determine how to access the Configuration Word.

2: It is the responsibility of the application designer to ensure the use of the 1.125 ms (nominal) DRT will result in acceptable operation. Refer to Electrical Specifications for V_{DD} rise time and stability requirements for this mode of operation.

© 2007 Microchip Technology Inc.

REGISTER 10-2: CONFIG: CONFIGURATION WORD REGISTER (PIC16F506)(1)

—	—	—	—	—	—	—	—
bit 15							bit 8

—	IOSCFS	MCLRE	$\overline{CP}$	WDTE	FOSC2	FOSC1	FOSC0
bit 7							bit 0

bit 11-7 **Unimplemented**: Read as '1'

bit 6 **IOSCFS:** Internal Oscillator Frequency Select bit
1 = 8 MHz INTOSC speed
0 = 4 MHz INTOSC speed

bit 5 **MCLRE:** Master Clear Enable bit
1 = RB3/$\overline{MCLR}$ pin functions as $\overline{MCLR}$
0 = RB3/$\overline{MCLR}$ pin functions as RB3, $\overline{MCLR}$ tied internally to V_{DD}

bit 4 **$\overline{CP}$:** Code Protection bit
1 = Code protection off
0 = Code protection on

bit 3 **WDTE:** Watchdog Timer Enable bit
1 = WDT enabled
0 = WDT disabled

bit 2-0 **FOSC<2:0>:** Oscillator Selection bits
000 = LP oscillator and 18 ms DRT
001 = XT oscillator and 18 ms DRT
010 = HS oscillator and 18 ms DRT
011 = EC oscillator with RB4 function on RB4/OSC2/CLKOUT and 1.125 ms DRT(2)
100 = INTOSC with RB4 function on RB4/OSC2/CLKOUT and 1.125 ms DRT(2)
101 = INTOSC with CLKOUT function on RB4/OSC2/CLKOUT and 1.125 ms DRT(2)
110 = EXTRC with RB4 function on RB4/OSC2/CLKOUT and 1.125 ms DRT (2)
111 = EXTRC with CLKOUT function on RB4/OSC2/CLKOUT and 1.125 ms DRT(2)

Note 1: Refer to the "*PIC16F506 Memory Programming Specification*" (DS41258) to determine how to access the Configuration Word.

2: It is the responsibility of the application designer to ensure the use of the 1.125 ms (nominal) DRT will result in acceptable operation. Refer to Electrical Specifications for V_{DD} rise time and stability requirements for this mode of operation.

10.2 Oscillator Configurations

10.2.1 OSCILLATOR TYPES

The PIC12F510/16F506 devices can be operated in up to six different oscillator modes. The user can program up to three Configuration bits (FOSC<1:0> [PIC12F510], FOSC<2:0> [PIC16F506]). To select one of these modes:

- •LP: Low-Power Crystal
- •XT: Crystal/Resonator
- •HS: High-Speed Crystal/Resonator (PIC16F506 only)
- •INTOSC: Internal 4/8 MHz Oscillator
- •EXTRC: External Resistor/Capacitor
- •EC: External High-Speed Clock Input (PIC16F506 only)

10.2.2 CRYSTAL OSCILLATOR/CERAMIC RESONATORS

In HS (PIC16F506), XT or LP modes, a crystal or ceramic resonator is connected to the (GP5/RB5)/OSC1/(CLKIN) and (GP4/RB4)/OSC2/(CLKOUT) pins to establish oscillation (Figure 10-1). The PIC12F510/16F506 oscillator designs require the use of a parallel cut crystal. Use of a series cut crystal may give a frequency out of the crystal manufacturers specifications. When in HS (PIC16F506), XT or LP modes, the device can have an external clock source drive the (GP5/RB5)/OSC1/CLKIN pin (Figure 10-2). When the part is used in this fashion, the output drive levels on the OSC2 pin are very weak. This pin should be left open and unloaded. Also, when using this mode, the external clock should observe the frequency limits for the clock mode chosen (HS, XT or LP).

Note 1: This device has been designed to perform to the parameters of its data sheet. It has been tested to an electrical specification designed to determine its conformance with these parameters. Due to process differences in the manufacture of this device, this device may have different performance characteristics than its earlier version. These differences may cause this device to perform differently in your application than the earlier version of this device.

2: The user should verify that the device oscillator starts and performs as expected. Adjusting the loading capacitor values and/or the Oscillator mode may be required.

FIGURE 10-1: CRYSTAL OPERATION (OR CERAMIC RESONATOR) (HS, XT OR LP OSC CONFIGURATION)

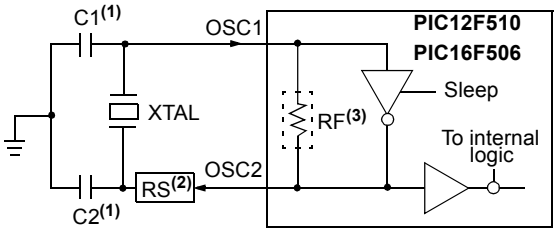

Note 1: See Capacitor Selection tables for recommended values of C1 and C2.

2: A series resistor (RS) may be required for AT strip cut crystals.

3: RF approx. value = 10 MΩ.

FIGURE 10-2: EXTERNAL CLOCK INPUT OPERATION (HS, XT OR LP OSC CONFIGURATION)

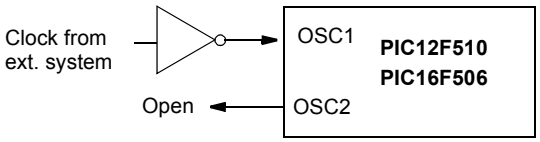

TABLE 10-1: CAPACITOR SELECTION FOR CERAMIC RESONATORS – PIC12F510/16F506(1)

Osc. Type	Resonator Freq.	Cap. Range C1	Cap. Range C2
XT	4.0 MHz	30 pF	30 pF
HS(2)	16 MHz	10-47 pF	10-47 pF

Note 1: These values are for design guidance only. Since each resonator has its own characteristics, the user should consult the resonator manufacturer for appropriate values of external components.

2: PIC16F506 only.

© 2007 Microchip Technology Inc.

TABLE 10-2: CAPACITOR SELECTION FOR CRYSTAL OSCILLATOR – PIC12F510/16F506(2)

Osc. Type	Resonator Freq.	Cap.Range C1	Cap. Range C2
LP	32 kHz(1)	15 pF	15 pF
XT	200 kHz 1 MHz 4 MHz	47-68 pF 15 pF 15 pF	47-68 pF 15 pF 15 pF
HS(3)	20 MHz	15-47 pF	15-47 pF

Note 1: For V_{DD} > 4.5V, C1 = C2 ≈ 30 pF is recommended.

2: These values are for design guidance only. Rs may be required to avoid overdriving crystals beyond the drive level specification. Since each crystal has its own characteristics, the user should consult the crystal manufacturer for appropriate values of external components.

3: PIC16F506 only.

10.2.3 EXTERNAL CRYSTAL OSCILLATOR CIRCUIT

Either a prepackaged oscillator or a simple oscillator circuit with TTL gates can be used as an external crystal oscillator circuit. Prepackaged oscillators provide a wide operating range and better stability. A well-designed crystal oscillator will provide good performance with TTL gates. Two types of crystal oscillator circuits can be used: one with parallel resonance or one with series resonance.

Figure 10-3 shows implementation of a parallel resonant oscillator circuit. The circuit is designed to use the fundamental frequency of the crystal. The 74AS04 inverter performs the 180-degree phase shift that a parallel oscillator requires. The 4.7 kΩ resistor provides the negative feedback for stability. The 10 kΩ potentiometers bias the 74AS04 in the linear region. This circuit could be used for external oscillator designs.

FIGURE 10-3: EXTERNAL PARALLEL RESONANT CRYSTAL OSCILLATOR CIRCUIT

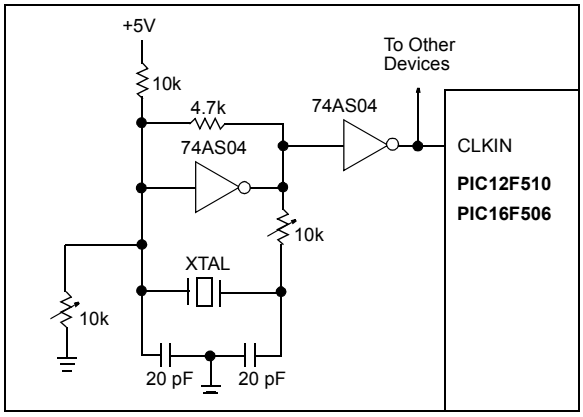

Figure 10-4 shows a series resonant oscillator circuit. This circuit is also designed to use the fundamental frequency of the crystal. The inverter performs a 180-degree phase shift in a series resonant oscillator circuit. The 330 Ω resistors provide the negative feedback to bias the inverters in their linear region.

FIGURE 10-4: EXTERNAL SERIES RESONANT CRYSTAL OSCILLATOR CIRCUIT

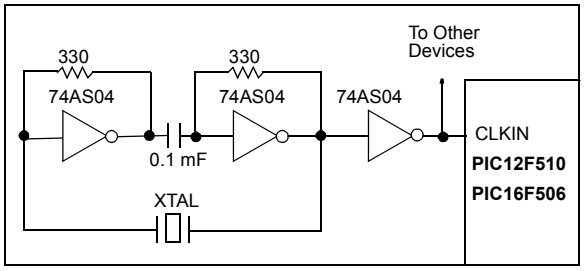

10.2.4 EXTERNAL RC OSCILLATOR

For timing insensitive applications, the EXTRC device option offers additional cost savings. The EXTRC oscillator frequency is a function of the supply voltage, the resistor (R_{EXT}) and capacitor (C_{EXT}) values, and the operating temperature. In addition to this, the oscillator frequency will vary from unit-to-unit due to normal process parameter variation. Furthermore, the difference in lead frame capacitance between package types will also affect the oscillation frequency, especially for low C_{EXT} values. The user also needs to take into account variation due to tolerance of external R and C components used.

Figure 10-5 shows how the R/C combination is connected to the PIC12F510/16F506 devices. For R_{EXT} values below 5.0 kΩ, the oscillator operation may become unstable or stop completely. For very high R_{EXT} values (e.g., 1 MΩ), the oscillator becomes sensitive to noise, humidity and leakage. Thus, we recommend keeping R_{EXT} between 5.0 kΩ and 100 kΩ.

Although the oscillator will operate with no external capacitor (C_{EXT} = 0 pF), we recommend using values above 20 pF for noise and stability reasons. With no capacitance or small external capacitance, the oscillation frequency can vary dramatically due to changes in external capacitances, such as PCB trace capacitance or package lead frame capacitance.

Section 13.0 "Electrical Characteristics", shows RC frequency variation from part-to-part due to normal process variation. The variation is larger for larger values of R (since leakage current variation will affect RC frequency more for large R) and for smaller values of C (since variation of input capacitance will affect RC frequency more).

Also, see the Electrical Specifications section for variation of oscillator frequency due to V_{DD} for given R_{EXT}/C_{EXT} values, as well as frequency variation due to operating temperature for given R, C and V_{DD} values.

FIGURE 10-5: EXTERNAL RC OSCILLATOR MODE

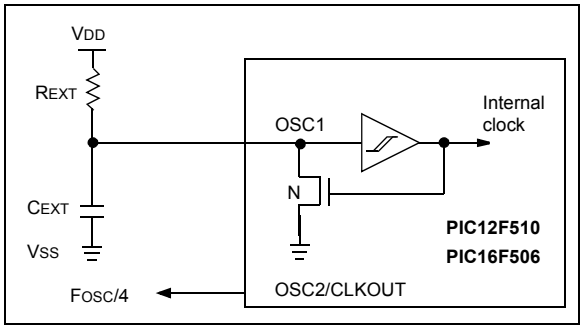

10.2.5 INTERNAL 4/8 MHz RC OSCILLATOR

The internal RC oscillator provides a fixed 4/8 MHz (nominal) system clock (see **Section 13.0 "Electrical Characteristics"** for information on variation over voltage and temperature).

In addition, a calibration instruction is programmed into the last address of memory, which contains the calibration value for the internal RC oscillator. This location is always uncode protected, regardless of the code-protect settings. This value is programmed as a `MOVLW XX` instruction where `XX` is the calibration value, and is placed at the Reset vector. This will load the W register with the calibration value upon Reset and the PC will then roll over to the users program at address 0x000. The user then has the option of writing the value to the OSCCAL Register (05h) or ignoring it.

OSCCAL, when written to with the calibration value, will "trim" the internal oscillator to remove process variation from the oscillator frequency.

Note:	Erasing the device will also erase the pre-programmed internal calibration value for the internal oscillator. The calibration value must be read prior to erasing the part so it can be reprogrammed correctly later.

For the PIC12F510/16F506 devices, only bits <7:1> of OSCCAL are used for calibration. See Register 4-5 for more information.

Note:	The 0 bit of OSCCAL is unimplemented and should be written as '0' when modifying OSCCAL for compatibility with future devices.

© 2007 Microchip Technology Inc.

10.3 Reset

The device differentiates between various kinds of Reset:

- Power-on Reset (POR)
- $\overline{\text{MCLR}}$ Reset during normal operation
- $\overline{\text{MCLR}}$ Reset during Sleep
- WDT Time-out Reset during normal operation
- WDT Time-out Reset during Sleep
- Wake-up from Sleep Reset on pin change
- Wake-up from Sleep Reset on comparator change

Some registers are not reset in any way, they are unknown on POR and unchanged in any other Reset. Most other registers are reset to "Reset state" on Power-on Reset (POR), $\overline{\text{MCLR}}$, WDT or Wake-up from Sleep Reset on pin change or wake-up from Sleep Reset on comparator change. The exceptions are $\overline{\text{TO}}$, $\overline{\text{PD}}$, CWUF and RBWUF/GPWUF bits. They are set or cleared differently in different Reset situations. These bits are used in software to determine the nature of Reset. See Table 10-4 for a full description of Reset states of all registers.

TABLE 10-3: RESET CONDITIONS FOR REGISTERS – PIC12F510

Register	Address	Power-on Reset	$\overline{\text{MCLR}}$ Reset, WDT Time-out, Wake-up On Pin Change, Wake-up on Comparator Change
W	—	qqqq qqqu(1)	qqqq qqqu(1)
INDF	00h	xxxx xxxx	uuuu uuuu
TMR0	01h	xxxx xxxx	uuuu uuuu
PCL	02h	1111 1111	1111 1111
STATUS	03h	0001 1xxx	qq0q quuu(2)
FSR	04h	110x xxxx	11uu uuuu
OSCCAL	05h	1111 111-	uuuu uuu-
GPIO	06h	--xx xxxx	--uu uuuu
CM1CON0	07h	1111 1111	uuuu uuuu
ADCON0	08h	1111 1100	uu11 1100
ADRES	09h	xxxx xxxx	uuuu uuuu
OPTION	—	1111 1111	1111 1111
TRISIO	—	--11 1111	--11 1111

Legend: u = unchanged, x = unknown, – = unimplemented bit, read as '0', q = value depends on condition.

Note 1: Bits <7:2> of W register contain oscillator calibration values due to MOVLW XX instruction at top of memory.

2: See Table 10-5 for Reset value for specific conditions.

TABLE 10-4: RESET CONDITIONS FOR REGISTERS – PIC16F506

Register	Address	Power-on Reset	$\overline{\text{MCLR}}$ Reset, WDT Time-out, Wake-up On Pin Change, Wake-up on Comparator Change
W	—	qqqq qqqu(1)	qqqq qqqu(1)
INDF	00h	xxxx xxxx	uuuu uuuu
TMR0	01h	xxxx xxxx	uuuu uuuu
PCL	02h	1111 1111	1111 1111
STATUS	03h	0001 1xxx	10uq quuu(2)
FSR	04h	100x xxxx	10uu uuuu
OSCCAL	05h	1111 111-	uuuu uuu-
PORTB	06h	--xx xxxx	--uu uuuu
PORTC	07h	--xx xxxx	--uu uuuu
CM1CON0	08h	1111 1111	uuuu uuuu
ADCON0	09h	1111 1100	uu11 1100
ADRES	0Ah	xxxx xxxx	uuuu uuuu
CM2CON0	0Bh	1111 1111	uuuu uuuu
VRCON	0Ch	0011 1111	uuuu uuuu
OPTION	—	1111 1111	1111 1111
TRISB	—	--11 1111	--11 1111
TRISC	—	--11 1111	--11 1111

Legend: u = unchanged, x = unknown, – = unimplemented bit, read as '0', q = value depends on condition.

Note 1: Bits <7:2> of W register contain oscillator calibration values due to MOVLW XX instruction at top of memory.

2: See Table 10-5 for Reset value for specific conditions.

TABLE 10-5: RESET CONDITION FOR SPECIAL REGISTERS

	STATUS Addr: 03h	PCL Addr: 02h
Power-on Reset	0001 1xxx	1111 1111
$\overline{\text{MCLR}}$ Reset during normal operation	000u uuuu	1111 1111
$\overline{\text{MCLR}}$ Reset during Sleep	0001 0uuu	1111 1111
WDT Reset during Sleep	0000 0uuu	1111 1111
WDT Reset normal operation	0000 uuuu	1111 1111
Wake-up from Sleep Reset on pin change	1001 0uuu	1111 1111
Wake from Sleep Reset on Comparator Change	0101 0uuu	1111 1111

Legend: u = unchanged, x = unknown, – = unimplemented bit, read as '0'.

© 2007 Microchip Technology Inc.

10.3.1 MCLR ENABLE

This Configuration bit, when unprogrammed (left in the '1' state), enables the external MCLR function. When programmed, the MCLR function is tied to the internal VDD and the pin is assigned to be a I/O. See Figure 10-6.

FIGURE 10-6: MCLR SELECT

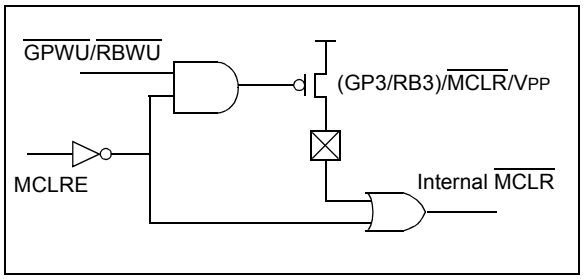

10.4 Power-on Reset (POR)

The PIC12F510/16F506 devices incorporate an on-chip Power-on Reset (POR) circuitry, which provides an internal chip Reset for most power-up situations.

The on-chip POR circuit holds the chip in Reset until VDD has reached a high enough level for proper operation. The POR is active regardless of the state of the MCLR enable bit. An internal weak pull-up resistor is implemented using a transistor (refer to Table 13-3 for the pull-up resistor ranges). This will eliminate external RC components usually needed to create an external Power-on Reset. A maximum rise time for VDD is specified. See **Section 13.0 "Electrical Characteristics"** for details.

When the devices start normal operation (exit the Reset condition), device operating parameters (voltage, frequency, temperature,...) must be met to ensure operation. If these conditions are not met, the devices must be held in Reset until the operating parameters are met.

A simplified block diagram of the on-chip Power-on Reset circuit is shown in Figure 10-7.

The Power-on Reset circuit and the Device Reset Timer (see **Section 10.5 "Device Reset Timer (DRT)"**) circuit are closely related. On power-up, the Reset latch is set and the DRT is reset. The DRT timer begins counting once it detects MCLR, internal or external, to be high. After the time-out period, it will reset the Reset latch and thus end the on-chip Reset signal.

A power-up example where MCLR is held low is shown in Figure 10-8. VDD is allowed to rise and stabilize before bringing MCLR high. The chip will actually come out of Reset TDRT msec after MCLR goes high.

In Figure 10-9, the on-chip Power-on Reset feature is being used (MCLR and VDD are tied together or the pin is programmed to be (GP3/RB3). The VDD is stable before the Start-up timer times out and there is no problem in getting a proper Reset. However, Figure 10-10 depicts a problem situation where VDD rises too slowly. The time between when the DRT senses that MCLR is high and when MCLR and VDD actually reach their full value, is too long. In this situation, when the start-up timer times out, VDD has not reached the VDD (min) value and the chip may not function correctly. For such situations, we recommend that external RC circuits be used to achieve longer POR delay times (Figure 10-9).

Note:	When the devices start normal operation (exit the Reset condition), device operating parameters (voltage, frequency, temperature, etc.) must be met to ensure operation. If these conditions are not met, the device must be held in Reset until the operating conditions are met.

For additional information, refer to Application Notes AN522, *"Power-Up Considerations"* (DS00522) and AN607, *"Power-up Trouble Shooting"* (DS00607).

FIGURE 10-7: SIMPLIFIED BLOCK DIAGRAM OF ON-CHIP RESET CIRCUIT

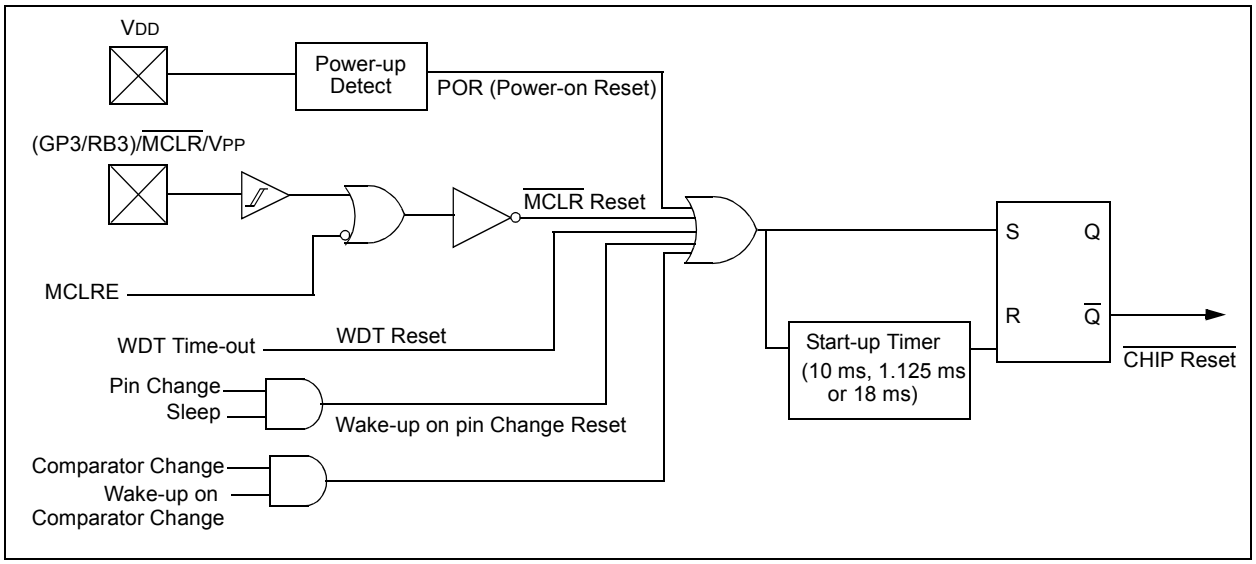

FIGURE 10-8: TIME-OUT SEQUENCE ON POWER-UP (MCLR PULLED LOW)

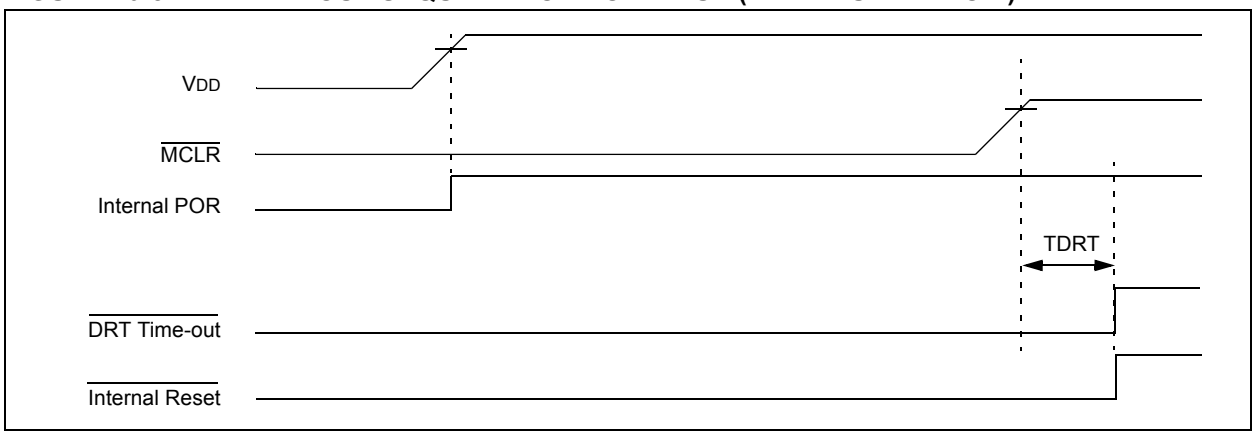

FIGURE 10-9: TIME-OUT SEQUENCE ON POWER-UP (MCLR TIED TO VDD): FAST VDD RISE TIME

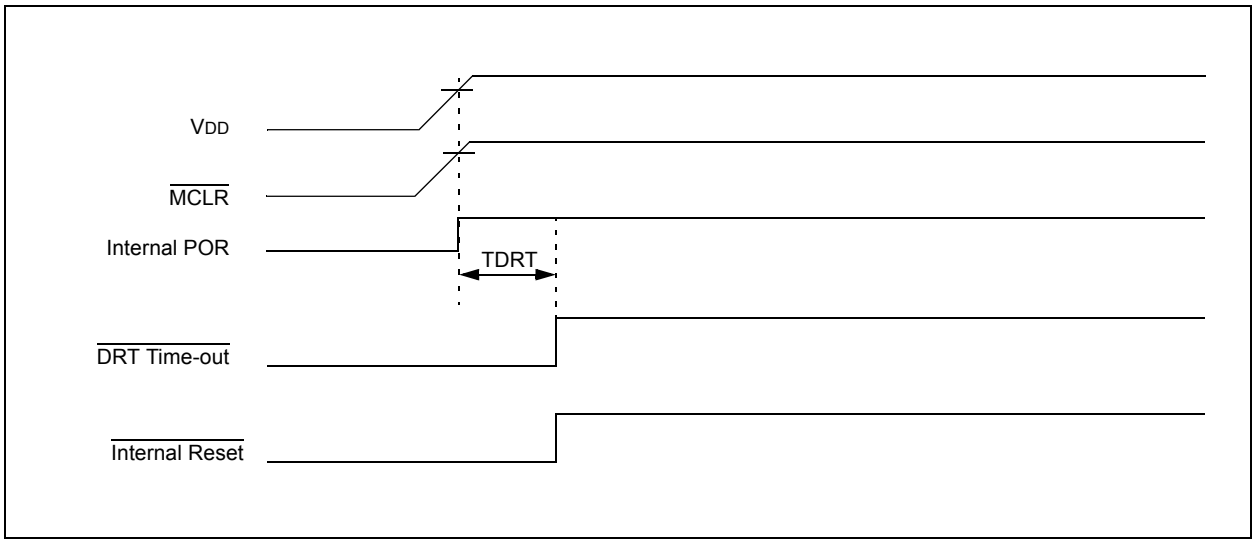

© 2007 Microchip Technology Inc.

FIGURE 10-10: TIME-OUT SEQUENCE ON POWER-UP ($\overline{MCLR}$ TIED TO V_{DD}): SLOW V_{DD} RISE TIME

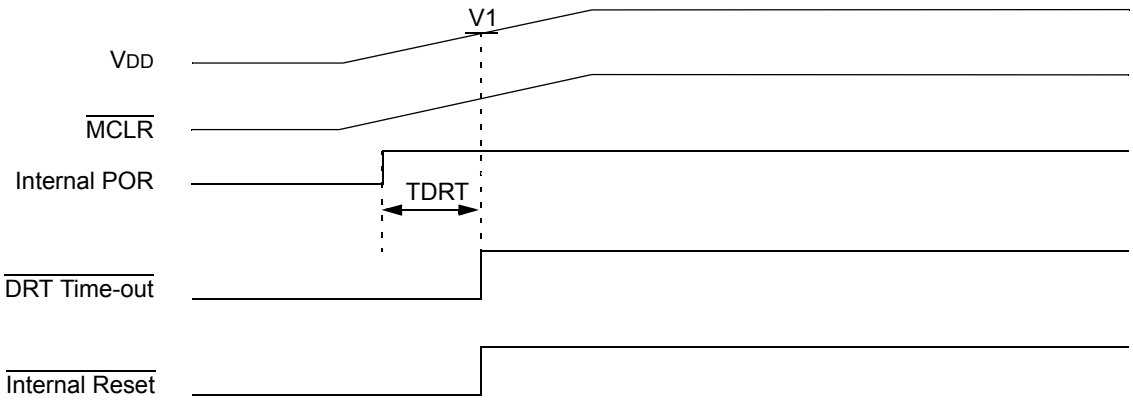

Note: When V_{DD} rises slowly, the T_{DRT} time-out expires long before V_{DD} has reached its final value. In this example, the chip will reset properly if, and only if, V1 ≥ V_{DD} min.

10.5 Device Reset Timer (DRT)

On the PIC12F510/16F506 devices, the DRT runs any time the device is powered up. DRT runs from Reset and varies based on oscillator selection and Reset type (see Table 10-6).

The DRT operates from a free running on-chip oscillator that is separate from INTOSC. The processor is kept in Reset as long as the DRT is active. The DRT delay allows VDD to rise above VDD minimum and for the oscillator to stabilize.

Oscillator circuits, based on crystals or ceramic resonators, require a certain time after power-up to establish a stable oscillation. The on-chip DRT keeps the devices in a Reset for a set period, as stated in Table 10-6, after $\overline{MCLR}$ has reached a logic high (VIH $\overline{MCLR}$) level. Programming (GP3/RB3)/$\overline{MCLR}$/VPP as $\overline{MCLR}$ and using an external RC network connected to the $\overline{MCLR}$ input is not required in most cases. This allows savings in cost-sensitive and/or space restricted applications, as well as allowing the use of the (GP3/RB3)/$\overline{MCLR}$/VPP pin as a general purpose input.

The DRT delays will vary from chip-to-chip due to VDD, temperature and process variation. See AC parameters for details.

The DRT will also be triggered upon a Watchdog Timer time-out from Sleep. This is particularly important for applications using the WDT to wake from Sleep mode automatically.

Reset sources are POR, $\overline{MCLR}$, WDT time-out, Wake-up on Pin Change and Wake-up on Comparator Change. See **Section 10.9.2 "Wake-up from Sleep Reset", Notes 1, 2 and 3**.

10.6 Watchdog Timer (WDT)

The Watchdog Timer (WDT) is a free running on-chip RC oscillator that does not require any external components. This RC oscillator is separate from the external RC oscillator of the (GP5/RB5)/OSC1/CLKIN pin and the internal 4/8 MHz oscillator. This means that the WDT will run even if the main processor clock has been stopped, for example, by execution of a SLEEP instruction. During normal operation or Sleep, a WDT Reset or wake-up Reset generates a device Reset.

The $\overline{TO}$ bit (STATUS<4>) will be cleared upon a Watchdog Timer Reset.

The WDT can be permanently disabled by programming the configuration WDTE as a '0' (see **Section 10.1 "Configuration Bits"**). Refer to the PIC12F510/16F506 Programming Specifications to determine how to access the Configuration Word.

TABLE 10-6: TYPICAL DRT PERIODS

Oscillator Configuration	POR Reset	Subsequent Resets
LP	18 ms	18 ms
XT	18 ms	18 ms
HS(1)	18 ms	18 ms
EC(1)	1.125 ms	10 µs
INTOSC	1.125 ms	10 µs
EXTRC	1.125 ms	10 µs

Note 1: PIC16F506 only

Note:	It is the responsibility of the application designer to ensure the use of the 1.125 ms nominal DRT will result in acceptable operation. Refer to Electrical Specifications for VDD rise time and stability requirements for this mode of operation.

10.6.1 WDT PERIOD

The WDT has a nominal time-out period of 18 ms (with no prescaler). If a longer time-out period is desired, a prescaler with a divisor ratio of up to 1:128 can be assigned to the WDT (under software control) by writing to the OPTION register. Thus, a time-out period of a nominal 2.3 seconds can be realized. These periods vary with temperature, VDD and part-to-part process variations (see DC specs).

Under worst-case conditions (VDD = Min., Temperature = Max., max. WDT prescaler), it may take several seconds before a WDT time-out occurs.

10.6.2 WDT PROGRAMMING CONSIDERATIONS

The CLRWDT instruction clears the WDT and the postscaler, if assigned to the WDT, and prevents it from timing out and generating a device Reset.

The SLEEP instruction resets the WDT and the postscaler, if assigned to the WDT. This gives the maximum Sleep time before a WDT wake-up Reset.

© 2007 Microchip Technology Inc.

FIGURE 10-11: WATCHDOG TIMER BLOCK DIAGRAM

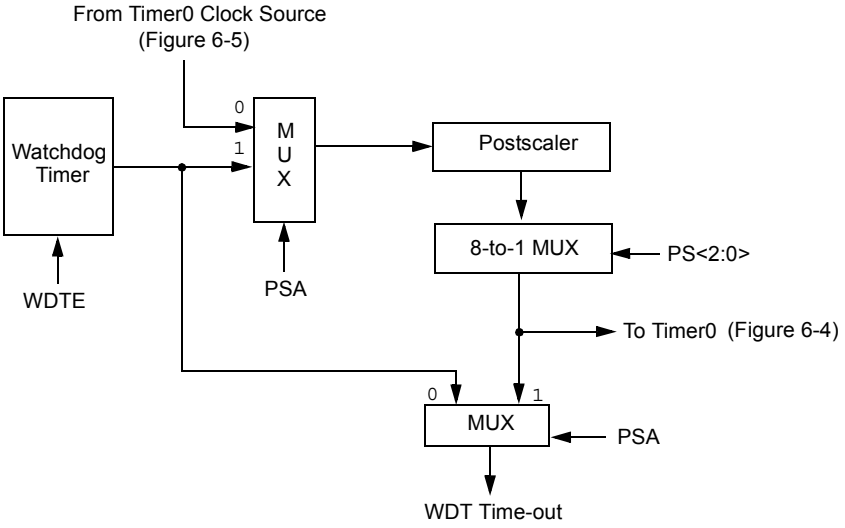

Note 1: T0CS, T0SE, PSA, PS<2:0> are bits in the OPTION register.

TABLE 10-7: SUMMARY OF REGISTERS ASSOCIATED WITH THE WATCHDOG TIMER

Address	Name	Bit 7	Bit 6	Bit 5	Bit 4	Bit 3	Bit 2	Bit 1	Bit 0	Value on Power-On Reset	Value on All Other Resets
N/A	OPTION(1)	$\overline{GPWU}$	$\overline{GPPU}$	T0CS	T0SE	PSA	PS2	PS1	PS0	1111 1111	1111 1111
N/A	OPTION(2)	$\overline{RBWU}$	$\overline{RBPU}$	T0CS	T0SE	PSA	PS2	PS1	PS0	1111 1111	1111 1111

Legend: Shaded boxes = Not used by Watchdog Timer. – = unimplemented, read as '0', u = unchanged.

Note 1: PIC12F510 only.

2: PIC16F506 only.

10.7 Time-out Sequence, Power-down and Wake-up from Sleep Status Bits (TO, PD, GPWUF/RBWUF)

The $\overline{TO}$, $\overline{PD}$ and (GPWUF/RBWUF) bits in the STATUS register can be tested to determine if a Reset condition has been caused by a power-up condition, a $\overline{MCLR}$ or Watchdog Timer (WDT) Reset.

TABLE 10-8: $\overline{TO}$/$\overline{PD}$/(GPWUF/RBWUF) STATUS AFTER RESET

CWUF	GPWUF/ RBWUF	$\overline{TO}$	$\overline{PD}$	Reset Caused By
0	0	0	0	WDT wake-up from Sleep
0	0	0	u	WDT time-out (not from Sleep)
0	0	1	0	$\overline{MCLR}$ wake-up from Sleep
0	0	1	1	Power-up
0	0	u	u	$\overline{MCLR}$ not during Sleep
0	1	1	0	Wake-up from Sleep on pin change
1	0	1	0	Wake-up from Sleep on comparator change

Legend: u = unchanged

10.8 Reset on Brown-out

A brown-out is a condition where device power (V_{DD}) dips below its minimum value, but not to zero, and then recovers. The device should be reset in the event of a brown-out.

To reset PIC12F510/16F506 devices when a brown-out occurs, external brown-out protection circuits may be built, as shown in Figure 10-12 and Figure 10-13.

FIGURE 10-12: BROWN-OUT PROTECTION CIRCUIT 1

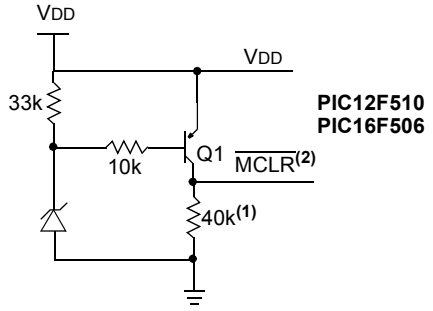

Note 1: This circuit will activate Reset when V_{DD} goes below Vz + 0.7V (where Vz = Zener voltage).
2: Pin must be configured as $\overline{MCLR}$.

FIGURE 10-13: BROWN-OUT PROTECTION CIRCUIT 2

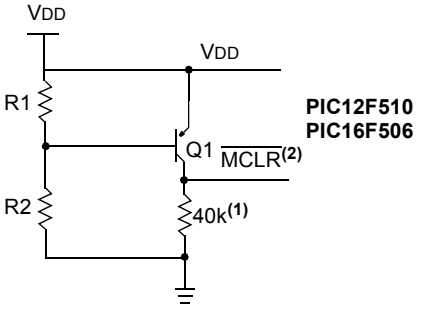

Note 1: This brown-out circuit is less expensive, although less accurate. Transistor Q1 turns off when V_{DD} is below a certain level such that:

$$V_{DD} \cdot \frac{R1}{R1 + R2} = 0.7V$$

2: Pin must be configured as $\overline{MCLR}$.

FIGURE 10-14: BROWN-OUT PROTECTION CIRCUIT 3

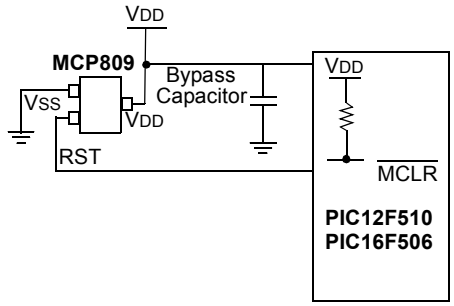

Note: This brown-out protection circuit employs Microchip Technology's MCP809 microcontroller supervisor. There are 7 different trip point selections to accommodate 5V to 3V systems.

© 2007 Microchip Technology Inc.

10.9 Power-Down Mode (Sleep)

A device may be powered down (Sleep) and later powered up (wake-up from Sleep Reset).

10.9.1 SLEEP

The Power-Down mode is entered by executing a SLEEP instruction.

If enabled, the Watchdog Timer will be cleared but keeps running, the $\overline{TO}$ bit (STATUS<4>) is set, the $\overline{PD}$ bit (STATUS<3>) is cleared and the oscillator driver is turned off. The I/O ports maintain the status they had before the SLEEP instruction was executed (driving high, driving low or high-impedance).

Note:	A device Reset generated by a WDT time-will not drive the $\overline{MCLR}$ pin low.

For lowest current consumption while powered down, all input pins should be at V_{DD} or V_{SS} and (GP3/RB3)/$\overline{MCLR}$/V_{PP} pin must be at a logic high level if $\overline{MCLR}$ is enabled.

10.9.2 WAKE-UP FROM SLEEP RESET

The device can wake-up from Sleep through one of the following events:

1. An external Reset input on (GP3/RB3)/$\overline{MCLR}$/V_{PP} pin when configured as $\overline{MCLR}$.
2. A Watchdog Timer Time-out Reset (if WDT was enabled).
3. A change-on-input pin GP0/RB0, GP1/RB1, GP3/RB3 or RB4 when wake-up on change is enabled.
4. A change in the comparator ouput bits, C1OUT and C2OUT (if comparator wake-up is enabled).

These events cause a device Reset. The $\overline{TO}$, $\overline{PD}$, CWUF and GPWUF/RBWUF bits can be used to determine the cause of device Reset. The $\overline{TO}$ bit is cleared if a WDT time-out occurred (and caused wake-up). The $\overline{PD}$ bit, which is set on power-up, is cleared when SLEEP is invoked. The CWUF bit indicates a change in comparator output state while the device was in Sleep. The GPWUF/RBWUF bit indicates a change in state while in Sleep at pins GP0/RB0, GP1/RB1, GP3/RB3 or RB4 (since the last file or bit operation on GP/RB port).

Note:	**Caution:** Right before entering Sleep, read the input pins. When in Sleep, wake-up occurs when the values at the pins change from the state they were in at the last reading. If a wake-up on change occurs and the pins are not read before reentering Sleep, a wake-up will occur immediately even if no pins change while in Sleep mode.

Note 1:	**Caution:** Right before entering Sleep, read the comparator Configuration register(s) CM1CON0 and CM2CON0. When in Sleep, wake-up occurs when the comparator output bit C1OUT and C2OUT change from the state they were in at the last reading. If a wake-up on comparator change occurs and the pins are not read before re-entering Sleep, a wake-up will occur immediately, even if no pins change while in Sleep mode.
2:	For 16F506 only.

The WDT is cleared when the device wakes from Sleep, regardless of the wake-up source.

10.10 Program Verification/Code Protection

If the code protection bit has not been programmed, the on-chip program memory can be read out for verification purposes.

The first 64 locations and the last location (OSCCAL) can be read, regardless of the code protection bit setting.

The last memory location can be read regardless of the code protection bit setting on the PIC12F510/16F506 devices.

10.11 ID Locations

Four memory locations are designated as ID locations where the user can store checksum or other code identification numbers. These locations are not accessible during normal execution, but are readable and writable during Program/Verify.

Use only the lower 4 bits of the ID locations and always set the upper 4 bits as '1's. The upper 4 bits are unimplemented.

These locations can be read regardless of the code protect setting.

10.12 In-Circuit Serial Programming™ (ICSP™)

The PIC12F510/16F506 microcontrollers can be serially programmed while in the end application circuit. This is simply done with two lines for clock and data, and three other lines for power, ground and the programming voltage. This allows customers to manufacture boards with unprogrammed devices and then program the microcontroller just before shipping the product. This also allows the most recent firmware, or a custom firmware, to be programmed.

The devices are placed into a Program/Verify mode by holding the GP1/RB1 and GP0/RB0 pins low while raising the $\overline{MCLR}$ (V_{PP}) pin from V_{IL} to V_{IHH} (see programming specification). GP1/RB1 becomes the programming clock and GP0/RB0 becomes the programming data. Both GP1/RB1 and GP0/RB0 are Schmitt Trigger inputs in this mode.

After Reset, a 6-bit command is supplied to the device. Depending on the command and if the command was a Load or a Read, 14 bits of program data are then supplied to or from the device. For complete details of serial programming, please refer to the PIC12F510/16F506 Programming Specifications.

A typical In-Circuit Serial Programming connection is shown in Figure 10-15.

FIGURE 10-15: TYPICAL IN-CIRCUIT SERIAL PROGRAMMING CONNECTION

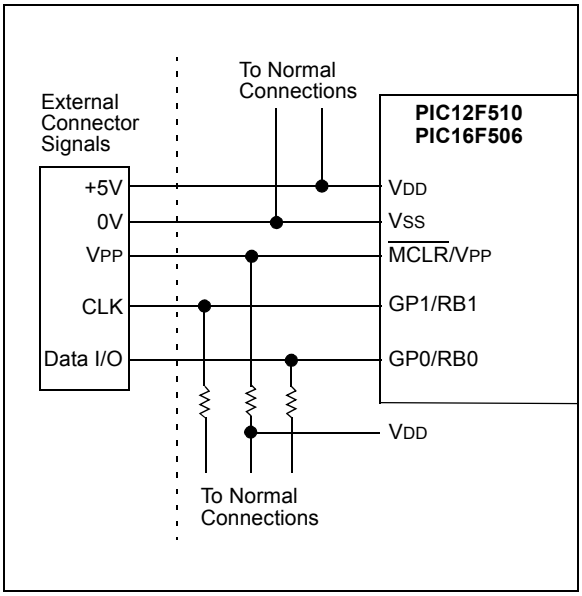

© 2007 Microchip Technology Inc.

11.0 INSTRUCTION SET SUMMARY

The PIC16 instruction set is highly orthogonal and is comprised of three basic categories.

- **Byte-oriented** operations
- **Bit-oriented** operations
- **Literal and control** operations

Each PIC16 instruction is a 12-bit word divided into an **opcode**, which specifies the instruction type, and one or more **operands** which further specify the operation of the instruction. The formats for each of the categories is presented in Figure 11-1, while the various opcode fields are summarized in Table 11-1.

For **byte-oriented** instructions, 'f' represents a file register designator and 'd' represents a destination designator. The file register designator specifies which file register is to be used by the instruction.

The destination designator specifies where the result of the operation is to be placed. If 'd' is '0', the result is placed in the W register. If 'd' is '1', the result is placed in the file register specified in the instruction.

For **bit-oriented** instructions, 'b' represents a bit field designator which selects the number of the bits affected by the operation, while 'f' represents the number of the file in which the bit is located.

For **literal and control** operations, 'k' represents an 8 or 9-bit constant or literal value.

TABLE 11-1: OPCODE FIELD DESCRIPTIONS

Field	Description
f	Register file address (0x00 to 0x7F)
W	Working register (accumulator)
b	Bit address within an 8-bit file register
k	Literal field, constant data or label
x	Don't care location (= 0 or 1) The assembler will generate code with x = 0. It is the recommended form of use for compatibility with all Microchip software tools.
d	Destination select; d = 0 (store result in W) d = 1 (store result in file register 'f') Default is d = 1
label	Label name
TOS	Top-of-Stack
PC	Program Counter
WDT	Watchdog Timer counter
$\overline{TO}$	Time-out bit
$\overline{PD}$	Power-down bit
dest	Destination, either the W register or the specified register file location
[ ]	Options
( )	Contents
→	Assigned to
< >	Register bit field
∈	In the set of
italics	User defined term (font is courier)

All instructions are executed within a single instruction cycle, unless a conditional test is true or the program counter is changed as a result of an instruction. In this case, the execution takes two instruction cycles. One instruction cycle consists of four oscillator periods. Thus, for an oscillator frequency of 4 MHz, the normal instruction execution time is 1 μs. If a conditional test is true or the program counter is changed as a result of an instruction, the instruction execution time is 2 μs.

Figure 11-1 shows the three general formats that the instructions can have. All examples in the figure use the following format to represent a hexadecimal number:

0xhhh

where 'h' signifies a hexadecimal digit.

FIGURE 11-1: GENERAL FORMAT FOR INSTRUCTIONS

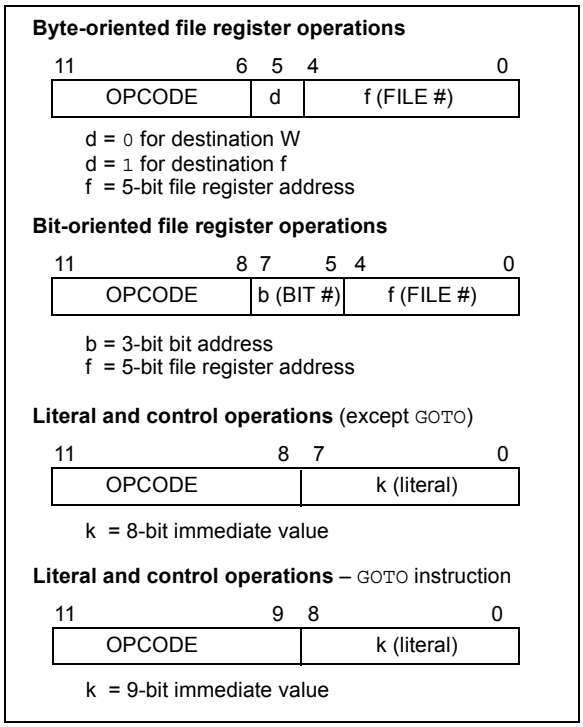

TABLE 11-2: INSTRUCTION SET SUMMARY

Mnemonic, Operands		Description	Cycles	12-Bit Opcode			Status Affected	Notes
				MSb		LSb		
ADDWF	f, d	Add W and f	1	0001	11df	ffff	C, DC, Z	**1, 2, 4**
ANDWF	f, d	AND W with f	1	0001	01df	ffff	Z	**2, 4**
CLRF	f	Clear f	1	0000	011f	ffff	Z	**4**
CLRW	–	Clear W	1	0000	0100	0000	Z	
COMF	f, d	Complement f	1	0010	01df	ffff	Z	
DECF	f, d	Decrement f	1	0000	11df	ffff	Z	**2, 4**
DECFSZ	f, d	Decrement f, Skip if 0	1**(2)**	0010	11df	ffff	None	**2, 4**
INCF	f, d	Increment f	1	0010	10df	ffff	Z	**2, 4**
INCFSZ	f, d	Increment f, Skip if 0	1**(2)**	0011	11df	ffff	None	**2, 4**
IORWF	f, d	Inclusive OR W with f	1	0001	00df	ffff	Z	**2, 4**
MOVF	f, d	Move f	1	0010	00df	ffff	Z	**2, 4**
MOVWF	f	Move W to f	1	0000	001f	ffff	None	**1, 4**
NOP	–	No Operation	1	0000	0000	0000	None	
RLF	f, d	Rotate left f through Carry	1	0011	01df	ffff	C	**2, 4**
RRF	f, d	Rotate right f through Carry	1	0011	00df	ffff	C	**2, 4**
SUBWF	f, d	Subtract W from f	1	0000	10df	ffff	C, DC, Z	**1, 2, 4**
SWAPF	f, d	Swap f	1	0011	10df	ffff	None	**2, 4**
XORWF	f, d	Exclusive OR W with f	1	0001	10df	ffff	Z	**2, 4**
BIT-ORIENTED FILE REGISTER OPERATIONS								
BCF	f, b	Bit Clear f	1	0100	bbbf	ffff	None	**2, 4**
BSF	f, b	Bit Set f	1	0101	bbbf	ffff	None	**2, 4**
BTFSC	f, b	Bit Test f, Skip if Clear	1**(2)**	0110	bbbf	ffff	None	
BTFSS	f, b	Bit Test f, Skip if Set	1**(2)**	0111	bbbf	ffff	None	
LITERAL AND CONTROL OPERATIONS								
ANDLW	k	AND literal with W	1	1110	kkkk	kkkk	Z	
CALL	k	Call Subroutine	2	1001	kkkk	kkkk	None	**1**
CLRWDT	–	Clear Watchdog Timer	1	0000	0000	0100	$\overline{TO}$, $\overline{PD}$	
GOTO	k	Unconditional branch	2	101k	kkkk	kkkk	None	
IORLW	k	Inclusive OR literal with W	1	1101	kkkk	kkkk	Z	
MOVLW	k	Move literal to W	1	1100	kkkk	kkkk	None	
OPTION	–	Load OPTION register	1	0000	0000	0010	None	
RETLW	k	Return, place literal in W	2	1000	kkkk	kkkk	None	
SLEEP	–	Go into Standby mode	1	0000	0000	0011	$\overline{TO}$, $\overline{PD}$	
TRIS	f	Load TRIS register	1	0000	0000	0fff	None	**3**
XORLW	k	Exclusive OR literal to W	1	1111	kkkk	kkkk	Z	

Note 1: The 9th bit of the Program Counter will be forced to a '0' by any instruction that writes to the PC except for GOTO. See **Section 4.6 "Program Counter"**.

2: When an I/O register is modified as a function of itself (e.g. MOVF PORTB, 1), the value used will be that value present on the pins themselves. For example, if the data latch is '1' for a pin configured as input and is driven low by an external device, the data will be written back with a '0'.

3: The instruction TRIS f, where f = 6, causes the contents of the W register to be written to the tri-state latches of PORTB. A '1' forces the pin to a high-impedance state and disables the output buffers.

4: If this instruction is executed on the TMR0 register (and, where applicable, d = 1), the prescaler will be cleared (if assigned to TMR0).

© 2007 Microchip Technology Inc.

ADDWF	Add W and f
Syntax:	[*label*] ADDWF f,d
Operands:	0 ≤ f ≤ 31 d ∈ [0,1]
Operation:	(W) + (f) → (dest)
Status Affected:	C, DC, Z
Description:	Add the contents of the W register and register 'f'. If 'd' is '0', the result is stored in the W register. If 'd' is '1', the result is stored back in register 'f'.

ANDLW	AND literal with W
Syntax:	[*label*] ANDLW k
Operands:	0 ≤ k ≤ 255
Operation:	(W).AND. (k) → (W)
Status Affected:	Z
Description:	The contents of the W register are AND'ed with the eight-bit literal 'k'. The result is placed in the W register.

ANDWF	AND W with f
Syntax:	[*label*] ANDWF f,d
Operands:	0 ≤ f ≤ 31 d ∈ [0,1]
Operation:	(W) .AND. (f) → (dest)
Status Affected:	Z
Description:	The contents of the W register are AND'ed with register 'f'. If 'd' is '0', the result is stored in the W register. If 'd' is '1', the result is stored back in register 'f'.

BCF	Bit Clear f
Syntax:	[*label*] BCF f,b
Operands:	0 ≤ f ≤ 31 0 ≤ b ≤ 7
Operation:	0 → (f<b>)
Status Affected:	None
Description:	Bit 'b' in register 'f' is cleared.

BSF	Bit Set f
Syntax:	[*label*] BSF f,b
Operands:	0 ≤ f ≤ 31 0 ≤ b ≤ 7
Operation:	1 → (f<b>)
Status Affected:	None
Description:	Bit 'b' in register 'f' is set.

BTFSC	Bit Test f, Skip if Clear
Syntax:	[*label*] BTFSC f,b
Operands:	0 ≤ f ≤ 31 0 ≤ b ≤ 7
Operation:	skip if (f<b>) = 0
Status Affected:	None
Description:	If bit 'b' in register 'f' is '0', then the next instruction is skipped. If bit 'b' is '0', then the next instruction fetched during the current instruction execution is discarded, and a NOP is executed instead, making this a two-cycle instruction.

BTFSS	Bit Test f, Skip if Set
Syntax:	[*label*] BTFSS f,b
Operands:	0 ≤ f ≤ 31 0 ≤ b < 7
Operation:	skip if (f<b>) = 1
Status Affected:	None
Description:	If bit 'b' in register 'f' is '1', then the next instruction is skipped. If bit 'b' is '1', then the next instruction fetched during the current instruction execution, is discarded and a NOP is executed instead, making this a two-cycle instruction.

CALL	Subroutine Call
Syntax:	[*label*] CALL k
Operands:	0 ≤ k ≤ 255
Operation:	(PC) + 1→ Top-of-Stack; k → PC<7:0>; (STATUS <6:5>) → PC<10:9>; 0 → PC<8>
Status Affected:	None
Description:	Subroutine call. First, return address (PC + 1) is PUSHed onto the stack. The eight-bit immediate address is loaded into PC bits <7:0>. The upper bits PC<10:9> are loaded from STATUS <6:5>, PC<8> is cleared. CALL is a two-cycle instruction.

CLRF	Clear f
Syntax:	[*label*] CLRF f
Operands:	0 ≤ f ≤ 31
Operation:	00h → (f); 1 → Z
Status Affected:	Z
Description:	The contents of register 'f' are cleared and the Z bit is set.

CLRW	Clear W
Syntax:	[*label*] CLRW
Operands:	None
Operation:	00h → (W); 1 → Z
Status Affected:	Z
Description:	The W register is cleared. Zero bit (Z) is set.

CLRWDT	Clear Watchdog Timer
Syntax:	[*label*] CLRWDT
Operands:	None
Operation:	00h → WDT; 0 → WDT prescaler (if assigned); 1 → $\overline{TO}$; 1 → $\overline{PD}$
Status Affected:	$\overline{TO}$, $\overline{PD}$
Description:	The CLRWDT instruction resets the WDT. It also resets the prescaler, if the prescaler is assigned to the WDT and not Timer0. Status bits $\overline{TO}$ and $\overline{PD}$ are set.

COMF	Complement f
Syntax:	[*label*] COMF f,d
Operands:	0 ≤ f ≤ 31 d ∈ [0,1]
Operation:	($\bar{f}$) → (dest)
Status Affected:	Z
Description:	The contents of register 'f' are complemented. If 'd' is '0', the result is stored in the W register. If 'd' is '1', the result is stored back in register 'f'.

© 2007 Microchip Technology Inc.

DECF	Decrement f
Syntax:	[*label*] DECF f,d
Operands:	$0 \le f \le 31$ $d \in [0,1]$
Operation:	(f) – 1 → (dest)
Status Affected:	Z
Description:	Decrement register ‘f’. If ‘d’ is ‘0’, the result is stored in the W register. If ‘d’ is ‘1’, the result is stored back in register ‘f’.

DECFSZ	Decrement f, Skip if 0
Syntax:	[*label*] DECFSZ f,d
Operands:	$0 \le f \le 31$ $d \in [0,1]$
Operation:	(f) – 1 → d; skip if result = 0
Status Affected:	None
Description:	The contents of register ‘f’ are decremented. If ‘d’ is ‘0’, the result is placed in the W register. If ‘d’ is ‘1’, the result is placed back in register ‘f’. If the result is ‘0’, the next instruction, which is already fetched, is discarded and a NOP is executed instead making it a two-cycle instruction.

GOTO	Unconditional Branch
Syntax:	[*label*] GOTO k
Operands:	$0 \le k \le 511$
Operation:	k → PC<8:0>; STATUS <6:5> → PC<10:9>
Status Affected:	None
Description:	GOTO is an unconditional branch. The 9-bit immediate value is loaded into PC bits <8:0>. The upper bits of PC are loaded from STATUS <6:5>. GOTO is a two-cycle instruction.

INCF	Increment f
Syntax:	[*label*] INCF f,d
Operands:	$0 \le f \le 31$ $d \in [0,1]$
Operation:	(f) + 1 → (dest)
Status Affected:	Z
Description:	The contents of register ‘f’ are incremented. If ‘d’ is ‘0’, the result is placed in the W register. If ‘d’ is ‘1’, the result is placed back in register ‘f’.

INCFSZ	Increment f, Skip if 0
Syntax:	[*label*] INCFSZ f,d
Operands:	$0 \le f \le 31$ $d \in [0,1]$
Operation:	(f) + 1 → (dest), skip if result = 0
Status Affected:	None
Description:	The contents of register ‘f’ are incremented. If ‘d’ is ‘0’, the result is placed in the W register. If ‘d’ is ‘1’, the result is placed back in register ‘f’. If the result is ‘0’, then the next instruction, which is already fetched, is discarded and a NOP is executed instead making it a two-cycle instruction.

IORLW	Inclusive OR literal with W
Syntax:	[*label*] IORLW k
Operands:	$0 \le k \le 255$
Operation:	(W) .OR. (k) → (W)
Status Affected:	Z
Description:	The contents of the W register are OR’ed with the eight-bit literal ‘k’. The result is placed in the W register.

IORWF	Inclusive OR W with f
Syntax:	[*label*] IORWF f,d
Operands:	0 ≤ f ≤ 31 d ∈ [0,1]
Operation:	(W).OR. (f) → (dest)
Status Affected:	Z
Description:	Inclusive OR the W register with register 'f'. If 'd' is '0', the result is placed in the W register. If 'd' is '1', the result is placed back in register 'f'.

MOVF	Move f
Syntax:	[*label*] MOVF f,d
Operands:	0 ≤ f ≤ 31 d ∈ [0,1]
Operation:	(f) → (dest)
Status Affected:	Z
Description:	The contents of register 'f' are moved to destination 'd'. If 'd' is '0', destination is the W register. If 'd' is '1', the destination is file register 'f'. 'd' = 1 is useful as a test of a file register, since Status flag Z is affected.

MOVLW	Move Literal to W
Syntax:	[*label*] MOVLW k
Operands:	0 ≤ k ≤ 255
Operation:	k → (W)
Status Affected:	None
Description:	The eight-bit literal 'k' is loaded into the W register. The "don't cares" will be assembled as '0's.

MOVWF	Move W to f
Syntax:	[*label*] MOVWF f
Operands:	0 ≤ f ≤ 31
Operation:	(W) → (f)
Status Affected:	None
Description:	Move data from the W register to register 'f'.

NOP	No Operation
Syntax:	[*label*] NOP
Operands:	None
Operation:	No operation
Status Affected:	None
Description:	No operation.

OPTION	Load OPTION Register
Syntax:	[*label*] Option
Operands:	None
Operation:	(W) → Option
Status Affected:	None
Description:	The content of the W register is loaded into the OPTION register.

© 2007 Microchip Technology Inc.

RETLW **Return with Literal in W**

Syntax: [*label*] RETLW k

Operands: $0 \le k \le 255$

Operation: $k \rightarrow (W)$;
$TOS \rightarrow PC$

Status Affected: None

Description: The W register is loaded with the eight-bit literal 'k'. The program counter is loaded from the top of the stack (the return address). This is a two-cycle instruction.

RLF **Rotate Left f through Carry**

Syntax: [*label*] RLF f,d

Operands: $0 \le f \le 31$
$d \in [0,1]$

Operation: See description below

Status Affected: C

Description: The contents of register 'f' are rotated one bit to the left through the Carry flag. If 'd' is '0', the result is placed in the W register. If 'd' is '1', the result is stored back in register 'f'.

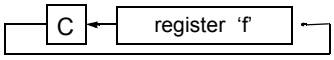

RRF **Rotate Right f through Carry**

Syntax: [*label*] RRF f,d

Operands: $0 \le f \le 31$
$d \in [0,1]$

Operation: See description below

Status Affected: C

Description: The contents of register 'f' are rotated one bit to the right through the Carry flag. If 'd' is '0', the result is placed in the W register. If 'd' is '1', the result is placed back in register 'f'.

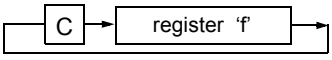

SLEEP **Enter SLEEP Mode**

Syntax: [*label*] SLEEP

Operands: None

Operation: $00h \rightarrow WDT$;
$0 \rightarrow$ WDT prescaler;
$1 \rightarrow \overline{TO}$;
$0 \rightarrow \overline{PD}$

Status Affected: $\overline{TO}$, $\overline{PD}$, RBWUF

Description: Time-out Status bit ($\overline{TO}$) is set. The Power-down Status bit ($\overline{PD}$) is cleared.
RBWUF is unaffected.
The WDT and its prescaler are cleared.
The processor is put into Sleep mode with the oscillator stopped.
See **Section 10.9 "Power-Down Mode (Sleep)"** on Sleep for more details.

SUBWF **Subtract W from f**

Syntax: [*label*] SUBWF f,d

Operands: $0 \le f \le 31$
$d \in [0,1]$

Operation: $(f) - (W) \rightarrow (dest)$

Status Affected: C, DC, Z

Description: Subtract (2's complement method) the W register from register 'f'. If 'd' is '0', the result is stored in the W register. If 'd' is '1', the result is stored back in register 'f'.

SWAPF **Swap Nibbles in f**

Syntax: [*label*] SWAPF f,d

Operands: $0 \le f \le 31$
$d \in [0,1]$

Operation: $(f<3:0>) \rightarrow (dest<7:4>)$;
$(f<7:4>) \rightarrow (dest<3:0>)$

Status Affected: None

Description: The upper and lower nibbles of register 'f' are exchanged. If 'd' is '0', the result is placed in W register. If 'd' is '1', the result is placed in register 'f'.

TRIS	Load TRIS Register
Syntax:	[*label*] TRIS f
Operands:	f = 6
Operation:	(W) → TRIS register f
Status Affected:	None
Description:	TRIS register 'f' (f = 6 or 7) is loaded with the contents of the W register

XORLW	Exclusive OR literal with W
Syntax:	[*label*] XORLW k
Operands:	0 ≤ k ≤ 255
Operation:	(W) .XOR. k → (W)
Status Affected:	Z
Description:	The contents of the W register are XOR'ed with the eight-bit literal 'k'. The result is placed in the W register.

XORWF	Exclusive OR W with f
Syntax:	[*label*] XORWF f,d
Operands:	0 ≤ f ≤ 31 d ∈ [0,1]
Operation:	(W) .XOR. (f) → (dest)
Status Affected:	Z
Description:	Exclusive OR the contents of the W register with register 'f'. If 'd' is '0', the result is stored in the W register. If 'd' is '1', the result is stored back in register 'f'.

© 2007 Microchip Technology Inc.

12.0 DEVELOPMENT SUPPORT

The PIC® microcontrollers are supported with a full range of hardware and software development tools:

- Integrated Development Environment
  - MPLAB® IDE Software
- Assemblers/Compilers/Linkers
  - MPASM™ Assembler
  - MPLAB C18 and MPLAB C30 C Compilers
  - MPLINK™ Object Linker/ MPLIB™ Object Librarian
  - MPLAB ASM30 Assembler/Linker/Library
- Simulators
  - MPLAB SIM Software Simulator
- Emulators
  - MPLAB ICE 2000 In-Circuit Emulator
  - MPLAB REAL ICE™ In-Circuit Emulator
- In-Circuit Debugger
  - MPLAB ICD 2
- Device Programmers
  - PICSTART® Plus Development Programmer
  - MPLAB PM3 Device Programmer
  - PICkit™ 2 Development Programmer
- Low-Cost Demonstration and Development Boards and Evaluation Kits

12.1 MPLAB Integrated Development Environment Software

The MPLAB IDE software brings an ease of software development previously unseen in the 8/16-bit microcontroller market. The MPLAB IDE is a Windows® operating system-based application that contains:

- A single graphical interface to all debugging tools
  - Simulator
  - Programmer (sold separately)
  - Emulator (sold separately)
  - In-Circuit Debugger (sold separately)
- A full-featured editor with color-coded context
- A multiple project manager
- Customizable data windows with direct edit of contents
- High-level source code debugging
- Visual device initializer for easy register initialization
- Mouse over variable inspection
- Drag and drop variables from source to watch windows
- Extensive on-line help
- Integration of select third party tools, such as HI-TECH Software C Compilers and IAR C Compilers

The MPLAB IDE allows you to:

- Edit your source files (either assembly or C)
- One touch assemble (or compile) and download to PIC MCU emulator and simulator tools (automatically updates all project information)
- Debug using:
  - Source files (assembly or C)
  - Mixed assembly and C
  - Machine code

MPLAB IDE supports multiple debugging tools in a single development paradigm, from the cost-effective simulators, through low-cost in-circuit debuggers, to full-featured emulators. This eliminates the learning curve when upgrading to tools with increased flexibility and power.

12.2 MPASM Assembler

The MPASM Assembler is a full-featured, universal macro assembler for all PIC MCUs.

The MPASM Assembler generates relocatable object files for the MPLINK Object Linker, Intel® standard HEX files, MAP files to detail memory usage and symbol reference, absolute LST files that contain source lines and generated machine code and COFF files for debugging.

The MPASM Assembler features include:

- Integration into MPLAB IDE projects
- User-defined macros to streamline assembly code
- Conditional assembly for multi-purpose source files
- Directives that allow complete control over the assembly process

12.3 MPLAB C18 and MPLAB C30 C Compilers

The MPLAB C18 and MPLAB C30 Code Development Systems are complete ANSI C compilers for Microchip's PIC18 and PIC24 families of microcontrollers and the dsPIC30 and dsPIC33 family of digital signal controllers. These compilers provide powerful integration capabilities, superior code optimization and ease of use not found with other compilers.

For easy source level debugging, the compilers provide symbol information that is optimized to the MPLAB IDE debugger.

12.4 MPLINK Object Linker/ MPLIB Object Librarian

The MPLINK Object Linker combines relocatable objects created by the MPASM Assembler and the MPLAB C18 C Compiler. It can link relocatable objects from precompiled libraries, using directives from a linker script.

The MPLIB Object Librarian manages the creation and modification of library files of precompiled code. When a routine from a library is called from a source file, only the modules that contain that routine will be linked in with the application. This allows large libraries to be used efficiently in many different applications.

The object linker/library features include:

- Efficient linking of single libraries instead of many smaller files
- Enhanced code maintainability by grouping related modules together
- Flexible creation of libraries with easy module listing, replacement, deletion and extraction

12.5 MPLAB ASM30 Assembler, Linker and Librarian

MPLAB ASM30 Assembler produces relocatable machine code from symbolic assembly language for dsPIC30F devices. MPLAB C30 C Compiler uses the assembler to produce its object file. The assembler generates relocatable object files that can then be archived or linked with other relocatable object files and archives to create an executable file. Notable features of the assembler include:

- Support for the entire dsPIC30F instruction set
- Support for fixed-point and floating-point data
- Command line interface
- Rich directive set
- Flexible macro language
- MPLAB IDE compatibility

12.6 MPLAB SIM Software Simulator

The MPLAB SIM Software Simulator allows code development in a PC-hosted environment by simulating the PIC MCUs and dsPIC® DSCs on an instruction level. On any given instruction, the data areas can be examined or modified and stimuli can be applied from a comprehensive stimulus controller. Registers can be logged to files for further run-time analysis. The trace buffer and logic analyzer display extend the power of the simulator to record and track program execution, actions on I/O, most peripherals and internal registers.

The MPLAB SIM Software Simulator fully supports symbolic debugging using the MPLAB C18 and MPLAB C30 C Compilers, and the MPASM and MPLAB ASM30 Assemblers. The software simulator offers the flexibility to develop and debug code outside of the hardware laboratory environment, making it an excellent, economical software development tool.

© 2007 Microchip Technology Inc.

12.7 MPLAB ICE 2000 High-Performance In-Circuit Emulator

The MPLAB ICE 2000 In-Circuit Emulator is intended to provide the product development engineer with a complete microcontroller design tool set for PIC microcontrollers. Software control of the MPLAB ICE 2000 In-Circuit Emulator is advanced by the MPLAB Integrated Development Environment, which allows editing, building, downloading and source debugging from a single environment.

The MPLAB ICE 2000 is a full-featured emulator system with enhanced trace, trigger and data monitoring features. Interchangeable processor modules allow the system to be easily reconfigured for emulation of different processors. The architecture of the MPLAB ICE 2000 In-Circuit Emulator allows expansion to support new PIC microcontrollers.

The MPLAB ICE 2000 In-Circuit Emulator system has been designed as a real-time emulation system with advanced features that are typically found on more expensive development tools. The PC platform and Microsoft® Windows® 32-bit operating system were chosen to best make these features available in a simple, unified application.

12.8 MPLAB REAL ICE In-Circuit Emulator System

MPLAB REAL ICE In-Circuit Emulator System is Microchip's next generation high-speed emulator for Microchip Flash DSC® and MCU devices. It debugs and programs PIC® and dsPIC® Flash microcontrollers with the easy-to-use, powerful graphical user interface of the MPLAB Integrated Development Environment (IDE), included with each kit.

The MPLAB REAL ICE probe is connected to the design engineer's PC using a high-speed USB 2.0 interface and is connected to the target with either a connector compatible with the popular MPLAB ICD 2 system (RJ11) or with the new high speed, noise tolerant, low-voltage differential signal (LVDS) interconnection (CAT5).

MPLAB REAL ICE is field upgradeable through future firmware downloads in MPLAB IDE. In upcoming releases of MPLAB IDE, new devices will be supported, and new features will be added, such as software breakpoints and assembly code trace. MPLAB REAL ICE offers significant advantages over competitive emulators including low-cost, full-speed emulation, real-time variable watches, trace analysis, complex breakpoints, a ruggedized probe interface and long (up to three meters) interconnection cables.

12.9 MPLAB ICD 2 In-Circuit Debugger

Microchip's In-Circuit Debugger, MPLAB ICD 2, is a powerful, low-cost, run-time development tool, connecting to the host PC via an RS-232 or high-speed USB interface. This tool is based on the Flash PIC MCUs and can be used to develop for these and other PIC MCUs and dsPIC DSCs. The MPLAB ICD 2 utilizes the in-circuit debugging capability built into the Flash devices. This feature, along with Microchip's In-Circuit Serial Programming™ (ICSP™) protocol, offers cost-effective, in-circuit Flash debugging from the graphical user interface of the MPLAB Integrated Development Environment. This enables a designer to develop and debug source code by setting breakpoints, single stepping and watching variables, and CPU status and peripheral registers. Running at full speed enables testing hardware and applications in real time. MPLAB ICD 2 also serves as a development programmer for selected PIC devices.

12.10 MPLAB PM3 Device Programmer

The MPLAB PM3 Device Programmer is a universal, CE compliant device programmer with programmable voltage verification at V_{DDMIN} and V_{DDMAX} for maximum reliability. It features a large LCD display (128 x 64) for menus and error messages and a modular, detachable socket assembly to support various package types. The ICSP™ cable assembly is included as a standard item. In Stand-Alone mode, the MPLAB PM3 Device Programmer can read, verify and program PIC devices without a PC connection. It can also set code protection in this mode. The MPLAB PM3 connects to the host PC via an RS-232 or USB cable. The MPLAB PM3 has high-speed communications and optimized algorithms for quick programming of large memory devices and incorporates an SD/MMC card for file storage and secure data applications.

12.11 PICSTART Plus Development Programmer

The PICSTART Plus Development Programmer is an easy-to-use, low-cost, prototype programmer. It connects to the PC via a COM (RS-232) port. MPLAB Integrated Development Environment software makes using the programmer simple and efficient. The PICSTART Plus Development Programmer supports most PIC devices in DIP packages up to 40 pins. Larger pin count devices, such as the PIC16C92X and PIC17C76X, may be supported with an adapter socket. The PICSTART Plus Development Programmer is CE compliant.

12.12 PICkit 2 Development Programmer

The PICkit™ 2 Development Programmer is a low-cost programmer and selected Flash device debugger with an easy-to-use interface for programming many of Microchip's baseline, mid-range and PIC18F families of Flash memory microcontrollers. The PICkit 2 Starter Kit includes a prototyping development board, twelve sequential lessons, software and HI-TECH's PICC™ Lite C compiler, and is designed to help get up to speed quickly using PIC® microcontrollers. The kit provides everything needed to program, evaluate and develop applications using Microchip's powerful, mid-range Flash memory family of microcontrollers.

12.13 Demonstration, Development and Evaluation Boards

A wide variety of demonstration, development and evaluation boards for various PIC MCUs and dsPIC DSCs allows quick application development on fully functional systems. Most boards include prototyping areas for adding custom circuitry and provide application firmware and source code for examination and modification.

The boards support a variety of features, including LEDs, temperature sensors, switches, speakers, RS-232 interfaces, LCD displays, potentiometers and additional EEPROM memory.

The demonstration and development boards can be used in teaching environments, for prototyping custom circuits and for learning about various microcontroller applications.

In addition to the PICDEM™ and dsPICDEM™ demonstration/development board series of circuits, Microchip has a line of evaluation kits and demonstration software for analog filter design, KEELOQ® security ICs, CAN, IrDA®, PowerSmart® battery management, SEEVAL® evaluation system, Sigma-Delta ADC, flow rate sensing, plus many more.

Check the Microchip web page (www.microchip.com) and the latest *"Product Selector Guide"* (DS00148) for the complete list of demonstration, development and evaluation kits.

© 2007 Microchip Technology Inc.

13.0 ELECTRICAL CHARACTERISTICS

Absolute Maximum Ratings†

Ambient temperature under bias ..... -40°C to +125°C
Storage temperature ..... -65°C to +150°C
Voltage on V_{DD} with respect to V_{SS} ..... 0 to +7.0V
Voltage on $\overline{MCLR}$ with respect to V_{SS} ..... 0 to +14V
Voltage on all other pins with respect to V_{SS} ..... -0.3V to (V_{DD} + 0.3V)
Total power dissipation(1) ..... 700 mW
Max. current out of V_{SS} pin ..... 200 mA
Max. current into V_{DD} pin ..... 150 mA
Input clamp current, I_{IK} (V_I < 0 or V_I > V_{DD}) ..... ±20 mA
Output clamp current, I_{OK} (V_O < 0 or V_O > V_{DD}) ..... ±20 mA
Max. output current sunk by any I/O pin ..... 25 mA
Max. output current sourced by any I/O pin ..... 25 mA
Max. output current sourced by I/O port ..... 100 mA
Max. output current sunk by I/O port ..... 100 mA

Note 1: Power dissipation is calculated as follows: $P_{DIS} = V_{DD} \times \{I_{DD} - \sum I_{OH}\} + \sum \{(V_{DD}-V_{OH}) \times I_{OH}\} + \sum(V_{OL} \times I_{OL})$

†NOTICE: Stresses above those listed under “Absolute Maximum Ratings” may cause permanent damage to the device. This is a stress rating only and functional operation of the device at those or any other conditions above those indicated in the operation listings of this specification is not implied. Exposure to maximum rating conditions for extended periods may affect device reliability.

FIGURE 13-1: VOLTAGE-FREQUENCY GRAPH, -40°C ≤ TA ≤ +125°C (PIC12F510)

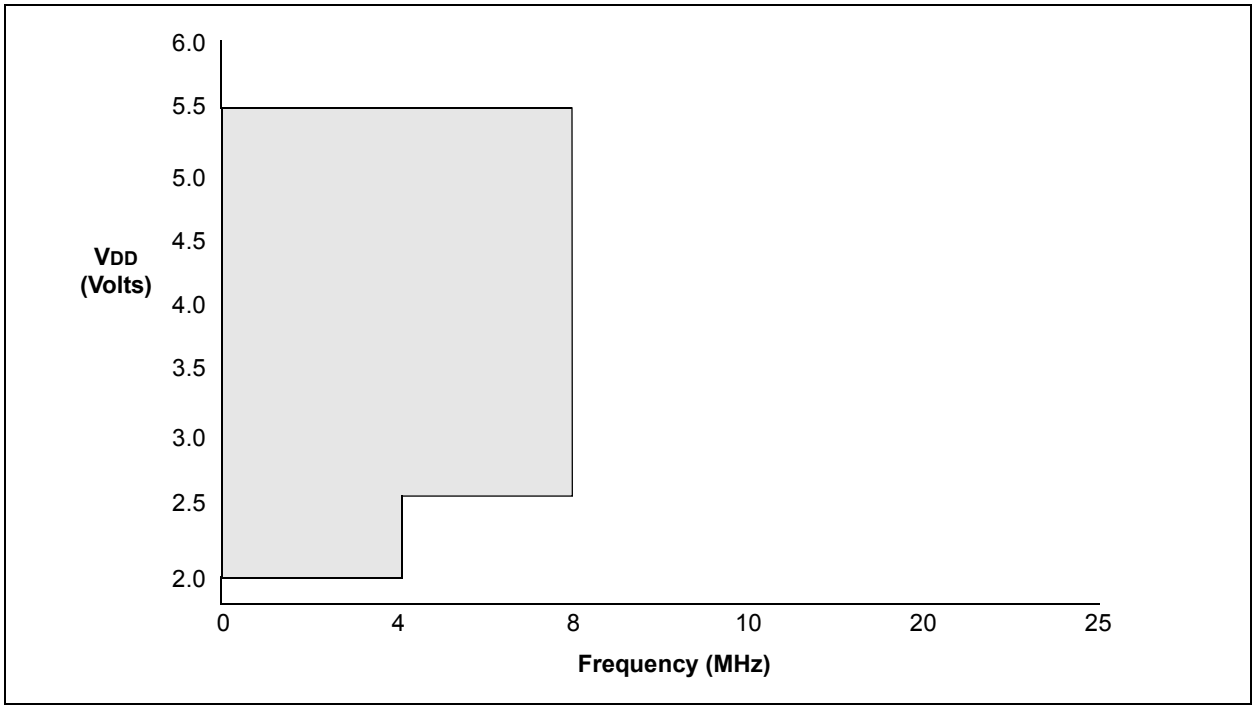

FIGURE 13-2: MAXIMUM OSCILLATOR FREQUENCY TABLE (PIC12F510)

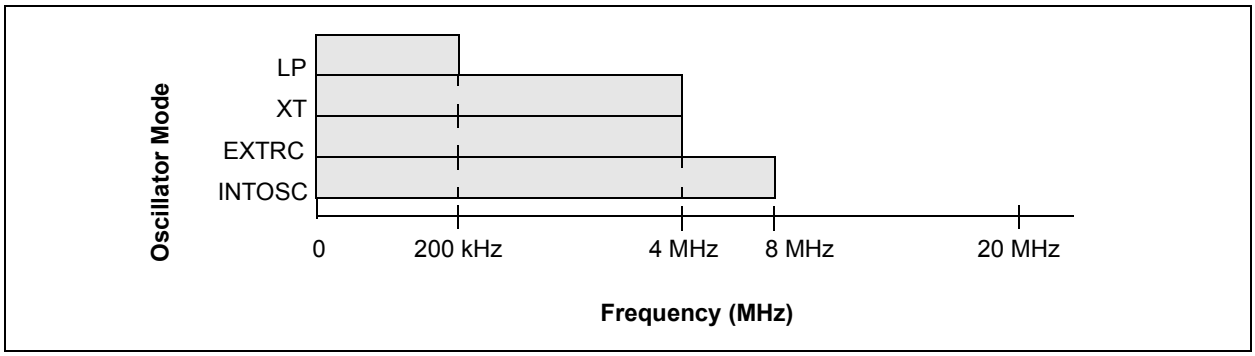

© 2007 Microchip Technology Inc.

FIGURE 13-3: VOLTAGE FREQUENCY GRAPH, -40°C ≤ TA ≤ +125°C (PIC16F506)

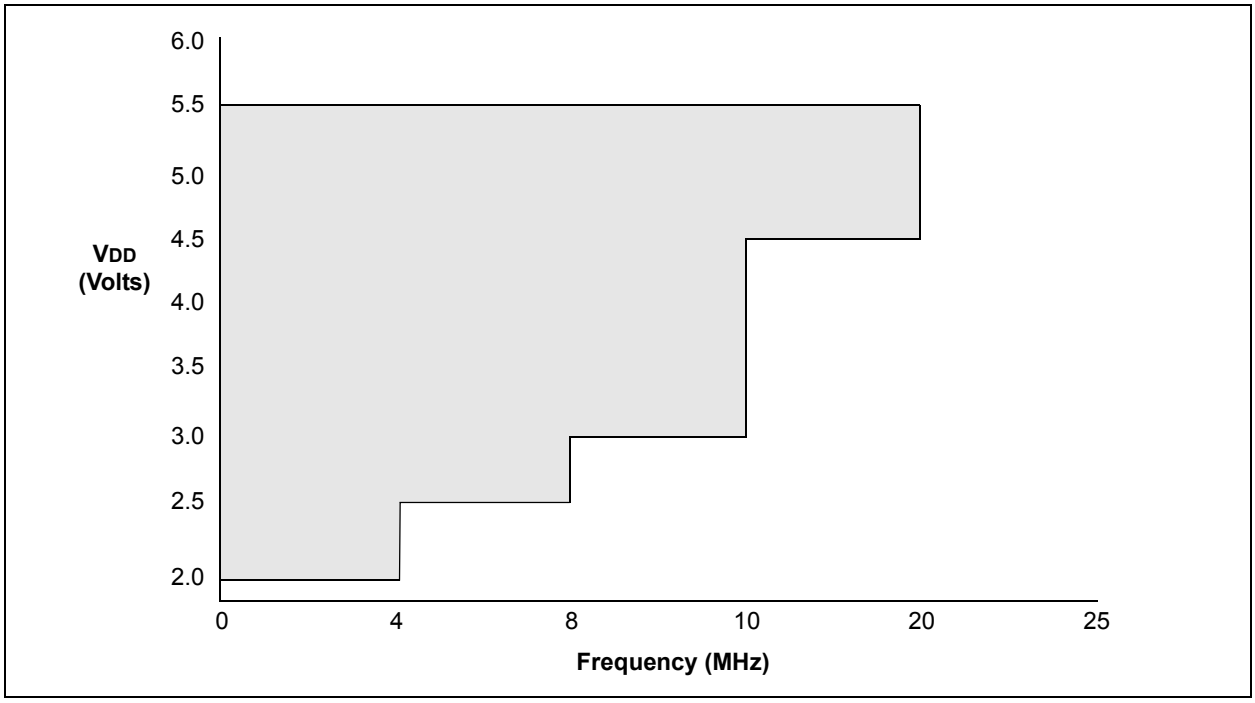

FIGURE 13-4: MAXIMUM OSCILLATOR FREQUENCY TABLE (PIC16F506)

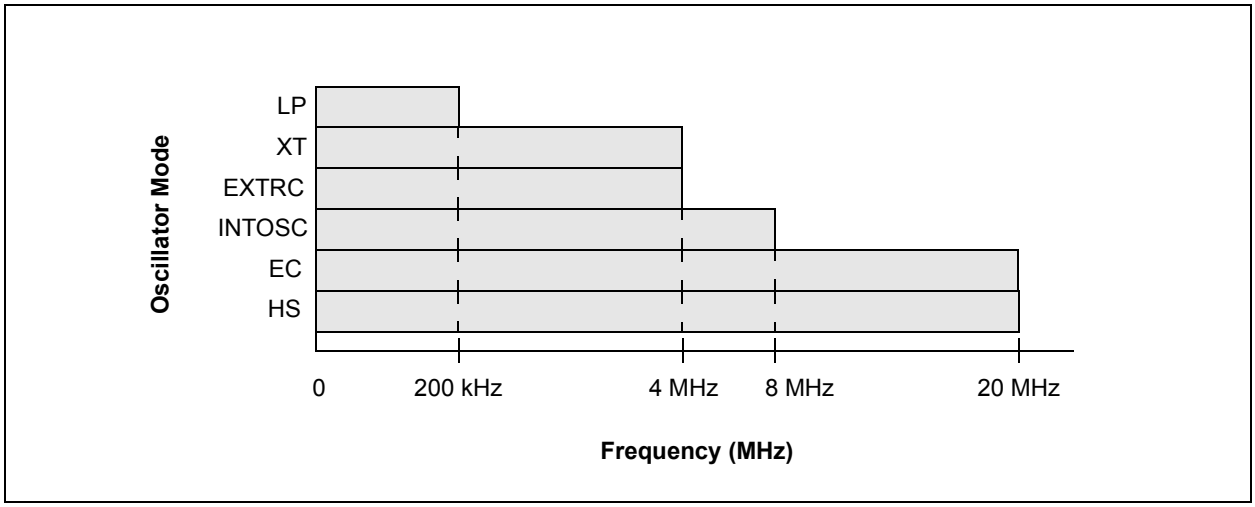

13.1 DC Characteristics: PIC12F510/16F506 (Industrial)

DC Characteristics			Standard Operating Conditions (unless otherwise specified) Operating Temperature 40°C ≤ TA ≤ +85°C (industrial)				
Param No.	**Sym**	**Characteristic**	**Min**	**Typ(1)**	**Max**	**Units**	**Conditions**
D001	VDD	**Supply Voltage**	2.0		5.5	V	See **Figure 14-1**
D002	VDR	**RAM Data Retention Voltage(2)**	—	1.5*	—	V	Device in Sleep mode
D003	VPOR	**VDD Start Voltage** to ensure Power-on Reset	—	Vss	—	V	See **Section 10.4 "Power-on Reset (POR)"** for details
D004	SVDD	**VDD Rise Rate** to ensure Power-on Reset	0.05*	—	—	V/ms	See **Section 10.4 "Power-on Reset (POR)"** for details
D010	IDD	**Supply Current(3,4)**	— —	175 0.625	275 1.1	µA mA	FOSC = 4 MHz, VDD = 2.0V FOSC = 4 MHz, VDD = 5.0V
			— —	250 1.0	450 1.5	µA mA	FOSC = 8 MHz, VDD = 2.0V FOSC = 8 MHz, VDD = 5.0V
			—	1.4	2.0	mA	FOSC = 20 MHz, VDD = 5.0V
			— —	11 38	15 52	µA µA	FOSC = 32 kHz, VDD = 2.0V FOSC = 32 kHz, VDD = 5.0V
D020	IPD	**Power-down Current(5)**	— —	0.1 0.35	1.2 2.4	µA µA	VDD = 2.0V VDD = 5.0V
D022	IWDT	**WDT Current(5)**	— —	1.0 7.0	3.0 16.0	µA µA	VDD = 2.0V VDD = 5.0V
D023	ICMP	**Comparator Current(5)**	— —	15 55	22 67	µA µA	VDD = 2.0V (per comparator) VDD = 5.0V (per comparator)
D022	ICVREF	**CVREF Current(5)**	— —	30 75	60 125	µA µA	VDD = 2.0V (high range) VDD = 5.0V (high range)
D023	IFVR	**Internal 0.6V Fixed Voltage Reference Current(5)**	— —	85 175	120 205	µA µA	VDD = 2.0V (0.6V reference and 1 comparator enabled) VDD = 5.0V (0.6V reference and 1 comparator enabled)
D024	ΔIAD	**A/D Conversion Current(5)**	—	120	150	µA	2.0V
			—	200	250	µA	5.0V

* These parameters are characterized but not tested.

Note 1: Data in the Typical ("Typ") column is based on characterization results at 25°C. This data is for design guidance only and is not tested.

2: This is the limit to which VDD can be lowered in Sleep mode without losing RAM data.

3: The supply current is mainly a function of the operating voltage and frequency. Other factors such as bus loading, oscillator type, bus rate, internal code execution pattern and temperature also have an impact on the current consumption.

4: The test conditions for all IDD measurements in active operation mode are: OSC1 = external square wave, from rail-to-rail; all I/O pins tri-stated, pulled to VSS, T0CKI = VDD, $\overline{\text{MCLR}}$ = VDD; WDT enabled/disabled as specified.

5: For standby current measurements, the conditions are the same as IDD, except that the device is in Sleep mode. If a module current is listed, the current is for that specific module enabled and the device in Sleep.

6: Does not include current through REXT. The current through the resistor can be estimated by the formula: I = VDD/2REXT (mA) with REXT in kΩ.

© 2007 Microchip Technology Inc.

13.2 DC Characteristics: PIC12F510/16F506 (Extended)

DC Characteristics			Standard Operating Conditions (unless otherwise specified) Operating Temperature 40°C ≤ TA ≤ +125°C (extended)				
Param No.	**Sym**	**Characteristic**	**Min**	**Typ(1)**	**Max**	**Units**	**Conditions**
D001	VDD	**Supply Voltage**	2.0		5.5	V	See **Figure 14-1**
D002	VDR	**RAM Data Retention Voltage(2)**	—	1.5*	—	V	Device in Sleep mode
D003	VPOR	**VDD Start Voltage** to ensure Power-on Reset	—	Vss	—	V	See **Section 10.4 "Power-on Reset (POR)"** for details
D004	SVDD	**VDD Rise Rate** to ensure Power-on Reset	0.05*	—	—	V/ms	See **Section 10.4 "Power-on Reset (POR)"** for details
D010	IDD	**Supply Current(3,4)**	— —	175 0.625	275 1.1	µA mA	FOSC = 4 MHz, VDD = 2.0V FOSC = 4 MHz, VDD = 5.0V
			— —	250 1.0	450 1.5	µA mA	FOSC = 8 MHz, VDD = 2.0V FOSC = 8 MHz, VDD = 5.0V
			—	1.4	2.0	mA	FOSC = 20 MHz, VDD = 5.0V
			— —	11 38	16 54	µA µA	FOSC = 32 kHz, VDD = 2.0V FOSC = 32 kHz, VDD = 5.0V
D020	IPD	**Power-down Current(5)**	— —	0.1 0.35	9.0 15.0	µA µA	VDD = 2.0V VDD = 5.0V
D022	IWDT	**WDT Current(5)**	— —	1.0 7.0	18 22	µA µA	VDD = 2.0V VDD = 5.0V
D023	ICMP	**Comparator Current(5)**	— —	15 55	25 75	µA µA	VDD = 2.0V (per comparator) VDD = 5.0V (per comparator)
D022	ICVREF	**CVREF Current(5)**	— —	30 75	65 135	µA µA	VDD = 2.0V (high range) VDD = 5.0V (high range)
D023	IFVR	**Internal 0.6V Fixed Voltage Reference Current(5)**	— —	85 175	130 220	µA µA	VDD = 2.0V (0.6V reference and 1 comparator enabled) VDD = 5.0V (0.6V reference and 1 comparator enabled)
D024	ΔIAD	**A/D Conversion Current(5)**	—	120	150	µA	2.0V
			—	200	250	µA	5.0V

* These parameters are characterized but not tested.

Note 1: Data in the Typical ("Typ") column is based on characterization results at 25°C. This data is for design guidance only and is not tested.

2: This is the limit to which VDD can be lowered in Sleep mode without losing RAM data.

3: The supply current is mainly a function of the operating voltage and frequency. Other factors such as bus loading, oscillator type, bus rate, internal code execution pattern and temperature also have an impact on the current consumption.

4: The test conditions for all IDD measurements in active operation mode are: OSC1 = external square wave, from rail-to-rail; all I/O pins tri-stated, pulled to VSS, T0CKI = VDD, $\overline{MCLR}$ = VDD; WDT enabled/disabled as specified.

5: For standby current measurements, the conditions are the same as IDD, except that the device is in Sleep mode. If a module current is listed, the current is for that specific module enabled and the device in Sleep.

6: Does not include current through REXT. The current through the resistor can be estimated by the formula: I = VDD/2REXT (mA) with REXT in kΩ.

13.3 DC Characteristics: PIC12F510/16F506 (Industrial, Extended)

DC CHARACTERISTICS			Standard Operating Conditions (unless otherwise specified) Operating Temperature -40°C ≤ TA ≤ +85°C (industrial) -40°C ≤ TA ≤ +125°C (extended)				
Param No.	**Sym**	**Characteristic**	**Min**	**Typ†**	**Max**	**Units**	**Conditions**
	VIL	**Input Low Voltage**					
		I/O ports					
D030		with TTL buffer	VSS	—	0.8V	V	For 4.5 ≤ VDD ≤ 5.5V
D030A			VSS	—	0.15 VDD	V	otherwise
D031		with Schmitt Trigger buffer	VSS	—	0.15 VDD	V	
D032		$\overline{MCLR}$, T0CKI	VSS	—	0.15 VDD	V	
D033		OSC1 (in EXTRC), EC(1)	VSS	—	0.15 VDD	V	
D033		OSC1 (in HS)	VSS	—	0.3 VDD	V	
D033		OSC1 (in XT and LP)	VSS	—	0.3 VDD	V	
	VIH	**Input High Voltage**					
		I/O ports		—			
D040		with TTL buffer	2.0	—	VDD	V	4.5 ≤ VDD ≤ 5.5V
D040A			0.25 VDD + 0.8V	—	VDD	V	Otherwise
D041		with Schmitt Trigger buffer	0.85 VDD	—	VDD	V	For entire VDD range
D042		$\overline{MCLR}$, T0CKI	0.85 VDD	—	VDD	V	
D043		OSC1 (in EXTRC), EC(1)	0.85 VDD	—	VDD	V	
D043		OSC1 (in HS)	0.7 VDD	—	VDD	V	
D043		OSC1 (in XT and LP)	1.6	—	VDD	V	
D070	IPUR	**GPIO/PORTB Weak Pull-up Current**	50	250	400	µA	VDD = 5V, VPIN = VSS
	IIL	**Input Leakage Current(2), (3)**					
D060		I/O ports	—	—	±1	µA	VSS ≤ VPIN ≤ VDD, Pin at high-impedance
D062		GP3/RB3/$\overline{MCLR}$(5)	50	250	400	µA	VDD = 5V
D061A		GP3/RB3/$\overline{MCLR}$(4)	—	+0.7	±5	µA	VSS ≤ VPIN ≤ VDD
D063		OSC1	—	—	±5	µA	VSS ≤ VPIN ≤ VDD, XT, HS and LP oscillator configuration
		Output Low Voltage					
D080	VOL	I/O ports/CLKOUT	—	—	0.6	V	IOL = 8.5 mA, VDD = 4.5V, –40°C to +85°C
D080A			—	—	0.6	V	IOL = 7.0 mA, VDD = 4.5V, –40°C to +125°C
D083		OSC2	—	—	0.6	V	IOL = 1.6 mA, VDD = 4.5V, –40°C to +85°C
D083A			—	—	0.6	V	IOL = 1.2 mA, VDD = 4.5V, –40°C to +125°C
		Output High Voltage					
D090	VOH	I/O ports/CLKOUT(3)	VDD – 0.7	—	—	V	IOH = -3.0 mA, VDD = 4.5V, –40°C to +85°C
D090A			VDD – 0.7	—	—	V	IOH = -2.5 mA, VDD = 4.5V, –40°C to +125°C
D092		OSC2	VDD – 0.7	—	—	V	IOH = -1.3 mA, VDD = 4.5V, –40°C to +85°C
D092A			VDD – 0.7	—	—	V	IOH = -1.0 mA, VDD = 4.5V, –40°C to +125°C
		Capacitive Loading Specs on Output Pins					
D100	COSC2	OSC2 pin	—	—	15	pF	In XT, HS and LP modes when external clock is used to drive OSC1.
D101	CIO	All I/O pins	—	—	50	pF	

† Data in "Typ" column is at 5V, 25°C unless otherwise stated. These parameters are for design guidance only and are not tested.

Note 1: In EXTRC oscillator configuration, the OSC1/CLKIN pin is a Schmitt Trigger input. It is not recommended that the PIC12F510/16F506 be driven with external clock in RC mode.

2: The leakage current on the $\overline{MCLR}$ pin is strongly dependent on the applied voltage level. The specified levels represent normal operating conditions. Higher leakage current may be measured at different input voltages.

3: Negative current is defined as coming out of the pin.

4: This specification applies when GP3/$\overline{MCLR}$ is configured as an input with the pull-up disabled. The leakage current for the GP3/RB3/$\overline{MCLR}$ pin is higher than for the standard I/O port pins.

5: This specification applies when GP3/RB3/$\overline{MCLR}$ is configured as the $\overline{MCLR}$ Reset pin function with the weak pull-up always enabled.

© 2007 Microchip Technology Inc.

TABLE 13-1: COMPARATOR SPECIFICATIONS

Sym	Characteristics	Min	Typ	Max	Units	Comments
VOS	Input Offset Voltage	—	±3	±10	mV	(VDD - 1.5V)/2
VCM	Input Common Mode Voltage	0	—	VDD – 1.5	V	
CMRR	Common Mode Rejection Ratio	+55*	—	—	dB	
TRT	Response Time(1)	—	150	400*	ns	Internal
VIVRF	Internal Voltage Reference	0.550	0.6	0.650	V	

* These parameters are characterized but not tested.

Note 1: Response time measured with one comparator input at (VDD – 1.5)/2, while the other input transitions from VSS to VDD – 1.5V.

TABLE 13-2: COMPARATOR VOLTAGE REFERENCE (CVREF) SPECIFICATIONS

Sym	Characteristics	Min	Typ	Max	Units	Comments
CVRES	Resolution	— —	VDD/24* VDD/32	— —	LSb LSb	Low Range (VRR = 1) High Range (VRR = 0)
	Absolute Accuracy	— —	— —	±1/2* ±1/2*	LSb LSb	Low Range (VRR = 1) High Range (VRR = 0)
	Unit Resistor Value (R)	— —	2K*	—	Ω	
	Settling Time(1)	—	—	10*	μs	

* These parameters are characterized but not tested.

Note 1: Settling time measured while VRR = 1 and VR<3:0> transitions from 0000 to 1111.

TABLE 13-3: A/D CONVERTER CHARACTERISTICS (PIC16F506/PIC12F510)

Param No.	Sym	Characteristic	Min	Typ†	Max	Units	Conditions
A01	NR	Resolution	—	—	8 bits	bit	
A03	EIL	Integral Error	—	—	± 1.5	LSb	VDD = 5.0V
A04	EDL	Differential Error	—	—	-1 < EDL ≤ 1.5	LSb	No missing codes to 8 bits VDD = 5.0V
A05	EFS	Full-scale Range	2	—	5.5*	V	VDD
A06	EOFF	Offset Error	—	—	± 1.5	LSb	VDD = 5.0V
A07	EGN	Gain Error	-0.5	—	+1.75	LSb	VDD = 5.0V
A10	—	Monotonicity	—	guaranteed(1)	—	—	VSS ≤ VAIN ≤ VDD
A25	VAIN	Analog Input Voltage	VSS	—	VDD	V	
A30	ZAIN	Recommended Impedance of Analog Voltage Source	—	—	10	kΩ	

* These parameters are characterized but not tested.

† Data in the “Typ” column is at 5.0V, 25°C unless otherwise stated. These parameters are for design guidance only are not tested.

Note 1: The A/D conversion result never decreases with an increase in the input voltage and has no missing codes.

13.4 Timing Parameter Symbology and Load Conditions

The timing parameter symbols have been created following one of the following formats:

1. TppS2ppS
2. TppS

T			
F	Frequency	T	Time

Lowercase (pp) and their meanings:

pp			
2	To	mc	$\overline{\text{MCLR}}$
ck	CLKOUT	osc	Oscillator
cy	Cycle Time	os	OSC1
drt	Device Reset Timer	t0	T0CKI
io	I/O port	wdt	Watchdog Timer

Uppercase letters and their meanings:

S			
F	Fall	P	Period
H	High	R	Rise
I	Invalid (high-impedance)	V	Valid
L	Low	Z	High-impedance

FIGURE 13-5: LOAD CONDITIONS

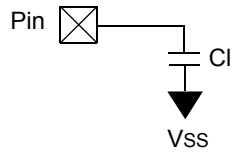

Legend:

C_L = 50 pF for all pins except OSC2

15 pF for OSC2 in XT, HS or LP modes when external clock is used to drive OSC1

FIGURE 13-6: EXTERNAL CLOCK TIMING

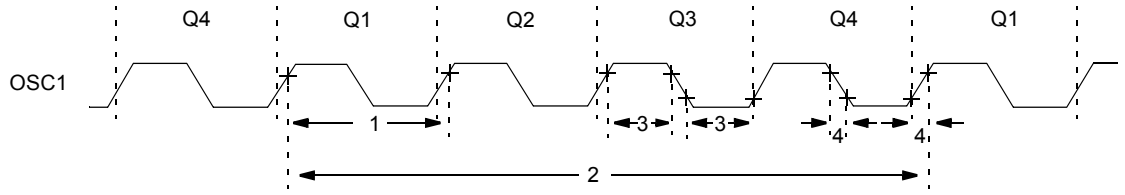

© 2007 Microchip Technology Inc.

TABLE 13-4: EXTERNAL CLOCK TIMING REQUIREMENTS

AC CHARACTERISTICS			Standard Operating Conditions (unless otherwise specified) Operating Temperature -40°C ≤ TA ≤ +85°C (industrial), -40°C ≤ TA ≤ +125°C (extended)				
Para No.	**Sym**	**Characteristic**	**Min**	**Typ(1)**	**Max**	**Units**	**Conditions**
1A	FOSC	External CLKIN Frequency(2)	DC	—	4	MHz	XT Oscillator mode
			DC	—	20	MHz	HS/EC Oscillator mode (PIC16F506 only)
			DC	—	200	kHz	LP Oscillator mode
		Oscillator Frequency(2)	—	—	4	MHz	EXTRC Oscillator mode
			0.1	—	4	MHz	XT Oscillator mode
			4	—	20	MHz	HS/EC Oscillator mode (PIC16F506 only)
			—	—	200	kHz	LP Oscillator mode
1	TOSC	External CLKIN Period(2)	250	—	—	ns	XT Oscillator mode
			50	—	—	ns	HS/EC Oscillator mode (PIC16F506 only)
			5	—	—	µs	LP Oscillator mode
		Oscillator Period(2)	250	—	—	ns	EXTRC Oscillator mode
			250	—	10,000	ns	XT Oscillator mode
			50	—	250	ns	HS/EC Oscillator mode (PIC16F506 only)
			5	—	—	µs	LP Oscillator mode
2	TCY	Instruction Cycle Time	200	4/FOSC	—	ns	
3	TosL, TosH	Clock in (OSC1) Low or High Time	50*	—	—	ns	XT Oscillator
			2*	—	—	µs	LP Oscillator
			10	—	—	ns	HS/EC Oscillator (PIC16F506 only)
4	TosR, TosF	Clock in (OSC1) Rise or Fall Time	—	—	25*	ns	XT Oscillator
			—	—	50*	ns	LP Oscillator
			—	—	15	ns	HS/EC Oscillator (PIC16F506 only)

* These parameters are characterized but not tested.

Note 1: Data in the Typical ("Typ") column is at 5V, 25°C unless otherwise stated. These parameters are for design guidance only and are not tested.

2: All specified values are based on characterization data for that particular oscillator type under standard operating conditions with the device executing code. Exceeding these specified limits may result in an unstable oscillator operation and/or higher than expected current consumption.
When an external clock input is used, the "max" cycle time limit is "DC" (no clock) for all devices.

TABLE 13-5: CALIBRATED INTERNAL RC FREQUENCIES

AC CHARACTERISTICS			Standard Operating Conditions (unless otherwise specified) Operating Temperature -40°C ≤ TA ≤ +85°C (industrial), -40°C ≤ TA ≤ +125°C (extended)					
Param No.	**Sym**	**Characteristic**	**Freq. Tolerance**	**Min**	**Typ(1)**	**Max***	**Units**	**Conditions**
F10	FOSC	Internal Calibrated INTOSC Frequency(1)	±1% ±2% ±5%	7.92 7.84 7.60	8.00 8.00 8.00	8.08 8.16 8.40	MHz MHz MHz	VDD = 3.5V TA = 25°C 2.5V ≤ VDD ≤ 5.5V 0°C ≤ TA ≤ +85°C 2.0V ≤ VDD ≤ 5.5V -40°C ≤ TA ≤ +85°C (Ind.) -40°C ≤ TA ≤ +125°C (Ext.)

* These parameters are characterized but not tested.

Note 1: Data in the Typical ("Typ") column is at 5V, 25°C unless otherwise stated. These parameters are for design guidance only and are not tested.

FIGURE 13-7: I/O TIMING

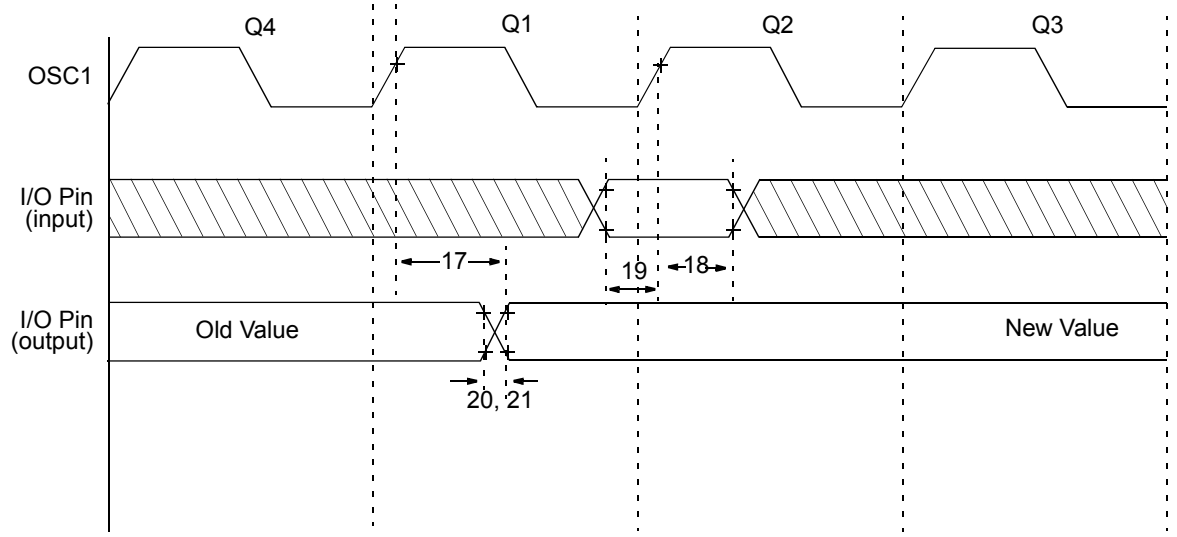

Note: All tests must be done with specified capacitive loads (see data sheet) 50 pF on I/O pins and CLKOUT.

© 2007 Microchip Technology Inc.

TABLE 13-6: TIMING REQUIREMENTS

AC CHARACTERISTICS		Standard Operating Conditions (unless otherwise specified) Operating Temperature -40°C ≤ TA ≤ +85°C (industrial) -40°C ≤ TA ≤ +125°C (extended)				
Param No.	**Sym**	**Characteristic**	**Min**	**Typ(1)**	**Max**	**Units**
17	TosH2ioV	OSC1↑ (Q1 cycle) to Port out valid(2), (3)	—	—	100*	ns
18	TosH2ioI	OSC1↑ (Q2 cycle) to Port input invalid (I/O in hold time)(2)	50	—	—	ns
19	TioV2osH	Port input valid to OSC1↑ (I/O in setup time)	20	—	—	ns
20	TioR	Port output rise time(2), (3)	—	10	25**	ns
21	TioF	Port output fall time(2), (3)	—	10	25**	ns

* These parameters are characterized but not tested.

** These parameters are design targets and are not tested.

Note 1: Data in the Typical ("Typ") column is at 5V, 25°C unless otherwise stated. These parameters are for design guidance only and are not tested.

2: Measurements are taken in EXTRC mode.

3: See Figure 13-5 for loading conditions.

FIGURE 13-8: RESET, WATCHDOG TIMER AND DEVICE RESET TIMER TIMING

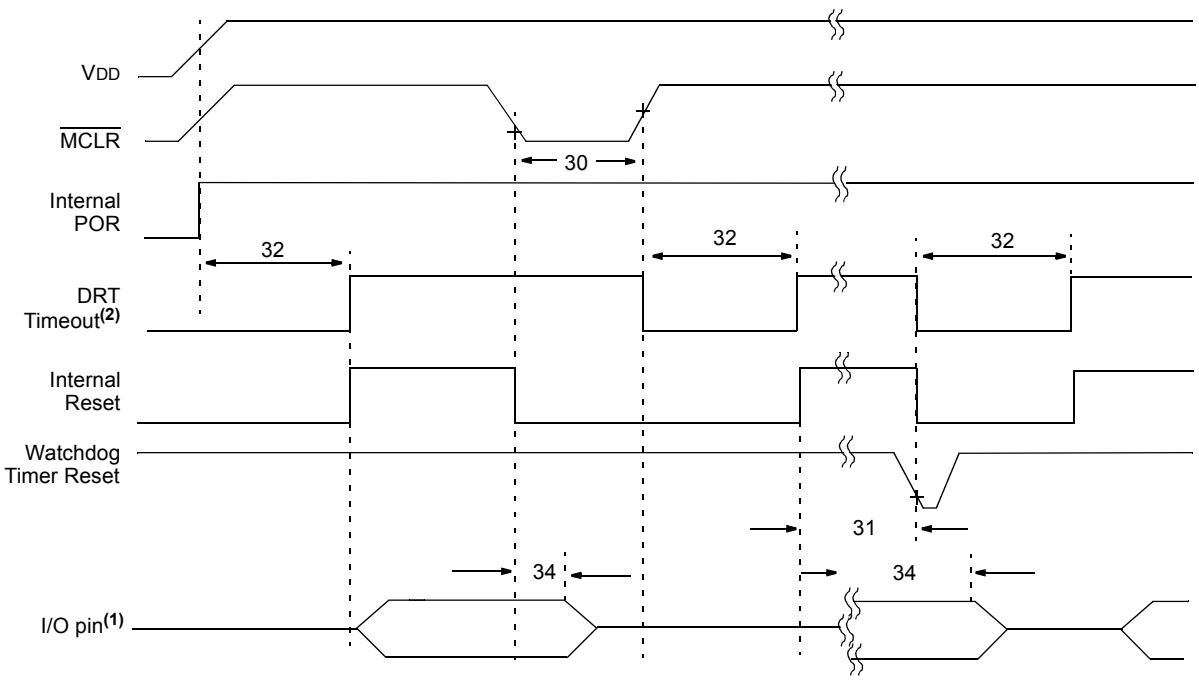

Note 1: I/O pins must be taken out of High-Impedance mode by enabling the output drivers in software.

2: Runs in MCLR or WDT Reset only in XT, LP and HS modes.

TABLE 13-7: RESET, WATCHDOG TIMER AND DEVICE RESET TIMER

AC CHARACTERISTICS			Standard Operating Conditions (unless otherwise specified) Operating Temperature -40°C ≤ TA ≤ +85°C (industrial) -40°C ≤ TA ≤ +125°C (extended)				
Param No.	**Sym**	**Characteristic**	**Min**	**Typ(1)**	**Max**	**Units**	**Conditions**
30	TMCL	$\overline{MCLR}$ Pulse Width (low)	2000*	—	—	ns	VDD = 5.0V
31	TWDT	Watchdog Timer Time-out Period (No Prescaler)	9* 9*	18* 18*	30* 40*	ms ms	VDD = 5.0V (Industrial) VDD = 5.0V (Extended)
32	TDRT	Device Reset Timer Period					
		Standard	9* 9*	18* 18*	30* 40*	ms ms	VDD = 5.0V (Industrial) VDD = 5.0V (Extended)
		Short	0.5* 0.5*	1.125* 1.125*	2* 2.5*	ms ms	VDD = 5.0V (Industrial) VDD = 5.0V (Extended)
34	TIOZ	I/O high-impedance from $\overline{MCLR}$ low	—	—	2000*	ns	

* These parameters are characterized but not tested.

Note 1: Data in the Typical ("Typ") column is at 5V, 25°C unless otherwise stated. These parameters are for design guidance only and are not tested.

FIGURE 13-9: TIMER0 CLOCK TIMINGS

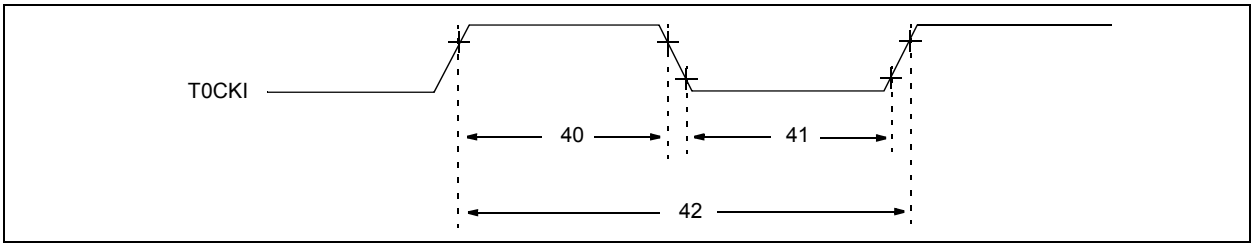

TABLE 13-8: TIMER0 CLOCK REQUIREMENTS

AC CHARACTERISTICS				Standard Operating Conditions (unless otherwise specified) Operating Temperature -40°C ≤ TA ≤ +85°C (industrial) -40°C ≤ TA ≤ +125°C (extended)				
Parm No.	**Sym**	**Characteristic**		**Min**	**Typ(1)**	**Max**	**Units**	**Conditions**
40	Tt0H	T0CKI High Pulse Width	No Prescaler	0.5 TCY + 20*	—	—	ns	
			With Prescaler	10*	—	—	ns	
41	Tt0L	T0CKI Low Pulse Width	No Prescaler	0.5 TCY + 20*	—	—	ns	
			With Prescaler	10*	—	—	ns	
42	Tt0P	T0CKI Period		20 or TCY + 40* N	—	—	ns	Whichever is greater. N = Prescale Value (1, 2, 4,..., 256)

* These parameters are characterized but not tested.

Note 1: Data in the Typical ("Typ") column is at 5V, 25°C unless otherwise stated. These parameters are for design guidance only and are not tested.

© 2007 Microchip Technology Inc.

TABLE 13-9: PULL-UP RESISTOR RANGES

VDD (Volts)	Temperature (°C)	Min	Typ	Max	Units
RB0 (GP0)/RB1 (GP1)					
2.0	-40	73K	105K	186K	Ω
	25	73K	113K	187K	Ω
	85	82K	123K	190K	Ω
	125	86K	132k	190K	Ω
5.5	-40	15K	21K	33K	Ω
	25	15K	22K	34K	Ω
	85	19K	26k	35K	Ω
	125	23K	29K	35K	Ω
RB3 (GP3)					
2.0	-40	63K	81K	96K	Ω
	25	77K	93K	116K	Ω
	85	82K	96k	116K	Ω
	125	86K	100K	119K	Ω
5.5	-40	16K	20k	22K	Ω
	25	16K	21K	23K	Ω
	85	24K	25k	28K	Ω
	125	26K	27K	29K	Ω

NOTES:

© 2007 Microchip Technology Inc.

14.0 DC AND CHARACTERISTICS GRAPHS AND CHARTS.

Note: The graphs and tables provided following this note are a statistical summary based on a limited number of samples and are provided for informational purposes only. The performance characteristics listed herein are not tested or guaranteed. In some graphs or tables, the data presented may be outside the specified operating range (e.g., outside specified power supply range) and therefore, outside the warranted range.

"Typical" represents the mean of the distribution at 25°C. "Maximum" or "minimum" represents (mean + 3σ) or (mean - 3σ) respectively, where s is a standard deviation, over each temperature range.

FIGURE 14-1: IDD vs. VDD OVER FOSC

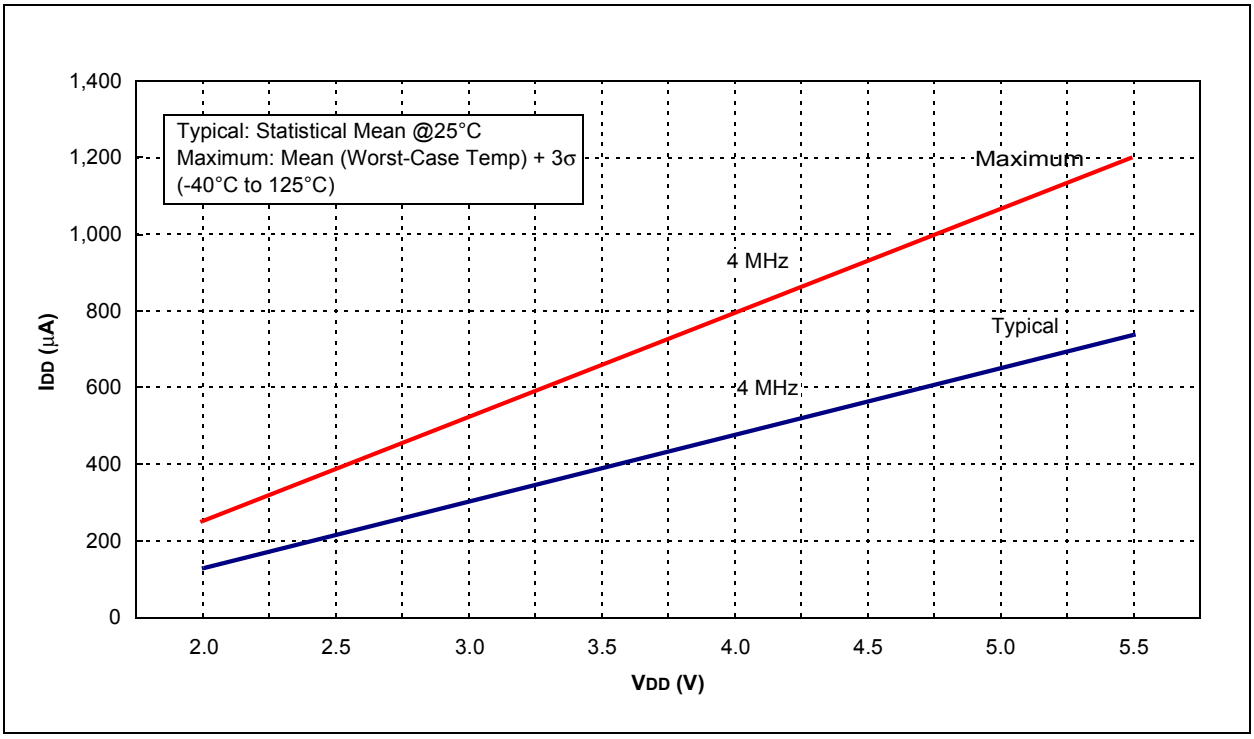

FIGURE 14-2: TYPICAL IPD vs. VDD (SLEEP MODE, ALL PERIPHERALS DISABLED)

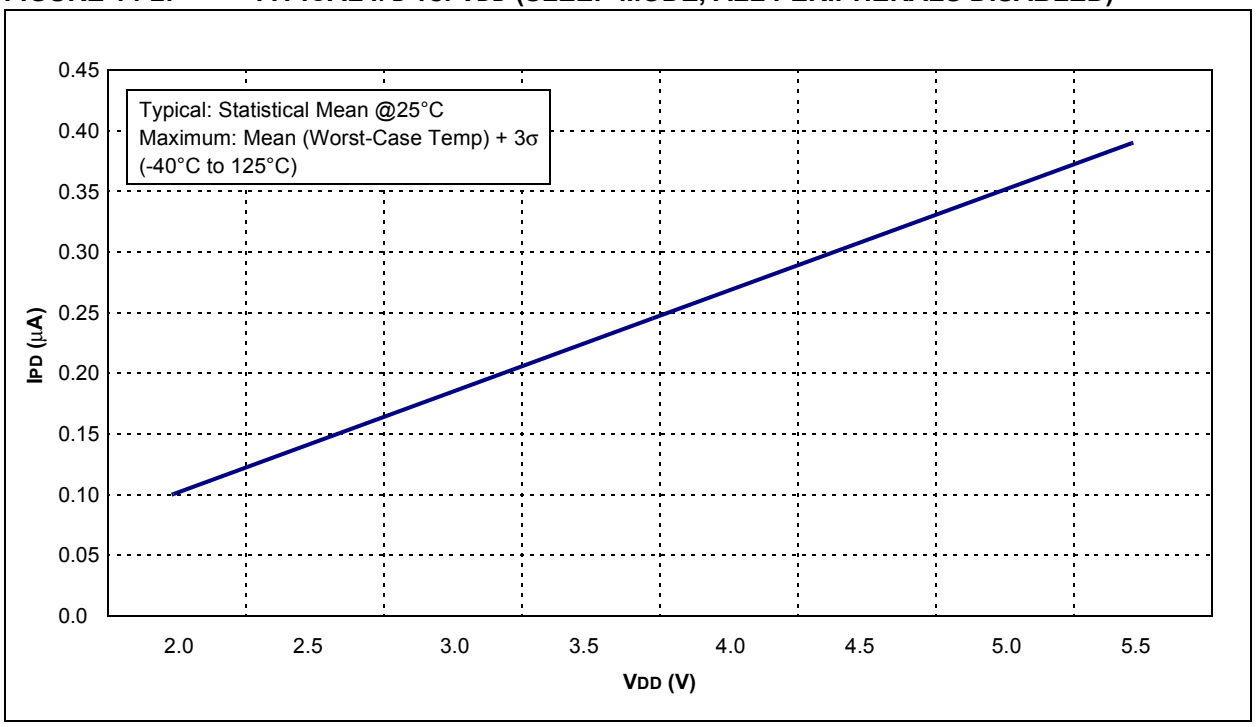

FIGURE 14-3: MAXIMUM IPD vs. VDD (SLEEP MODE, ALL PERIPHERALS DISABLED)

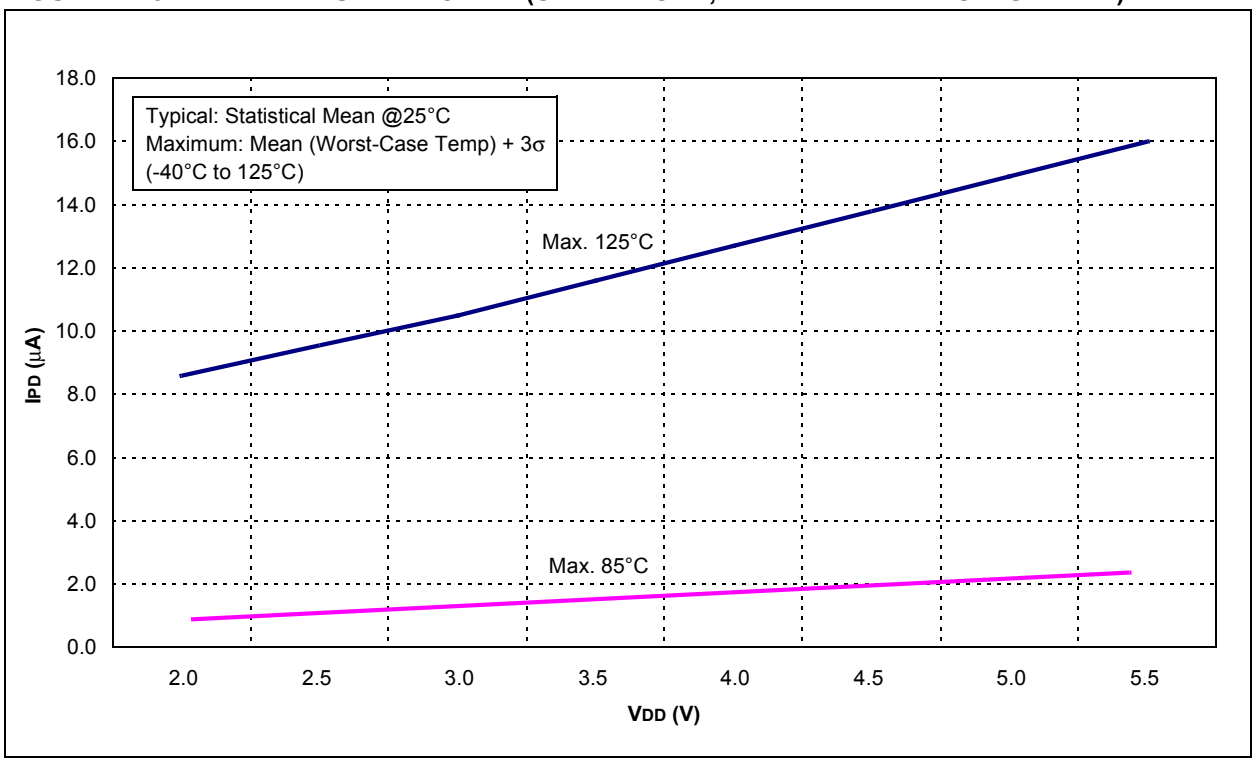

© 2007 Microchip Technology Inc.

FIGURE 14-4: COMPARATOR IPD vs. VDD (COMPARATOR ENABLED)

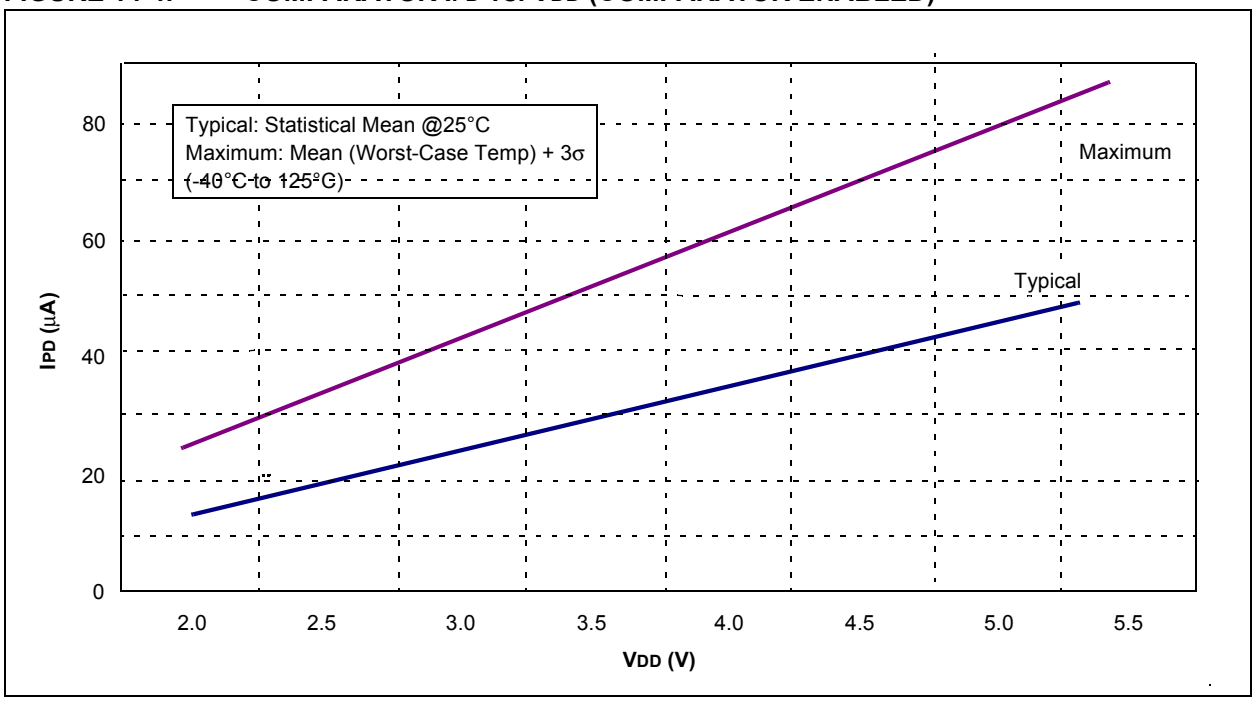

FIGURE 14-5: TYPICAL WDT IPD vs. VDD

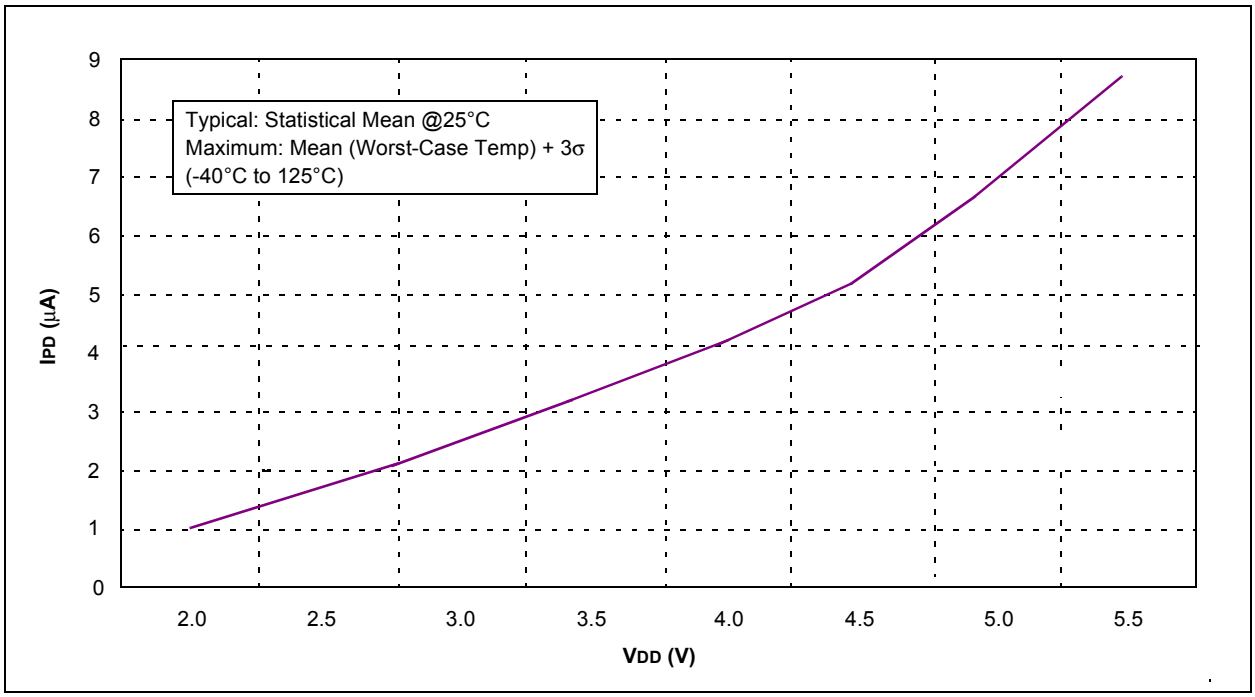

FIGURE 14-6: MAXIMUM WDT IPD vs. VDD OVER TEMPERATURE

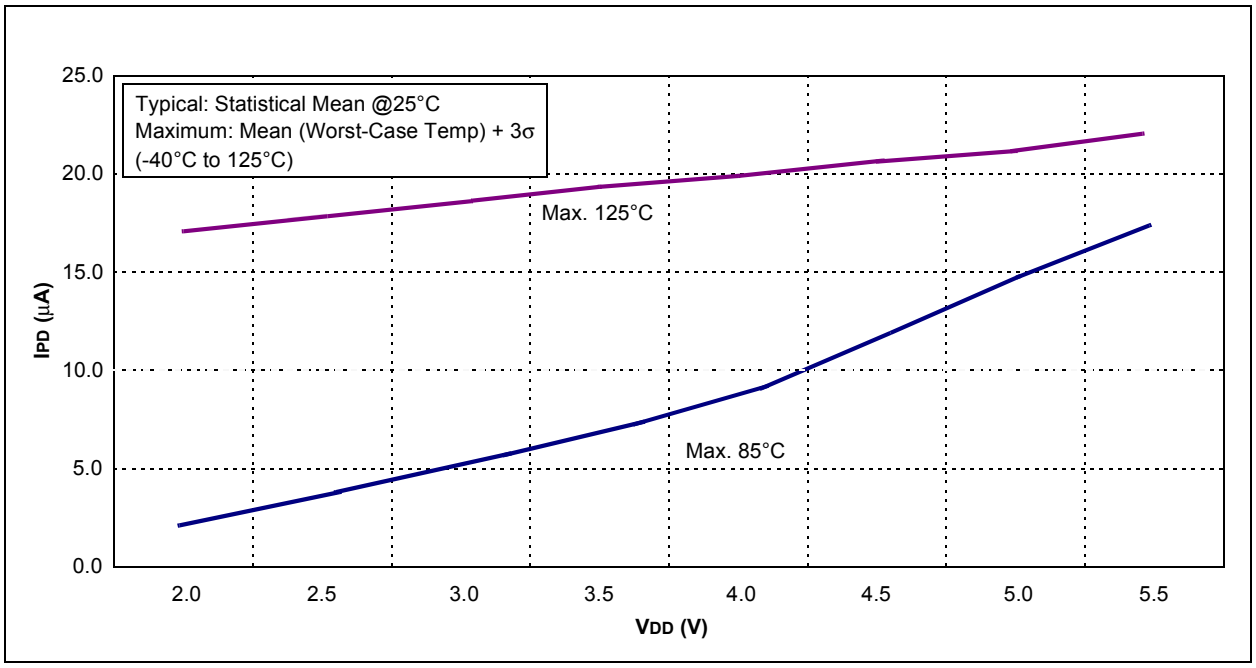

FIGURE 14-7: WDT TIME-OUT vs. VDD OVER TEMPERATURE (NO PRESCALER)

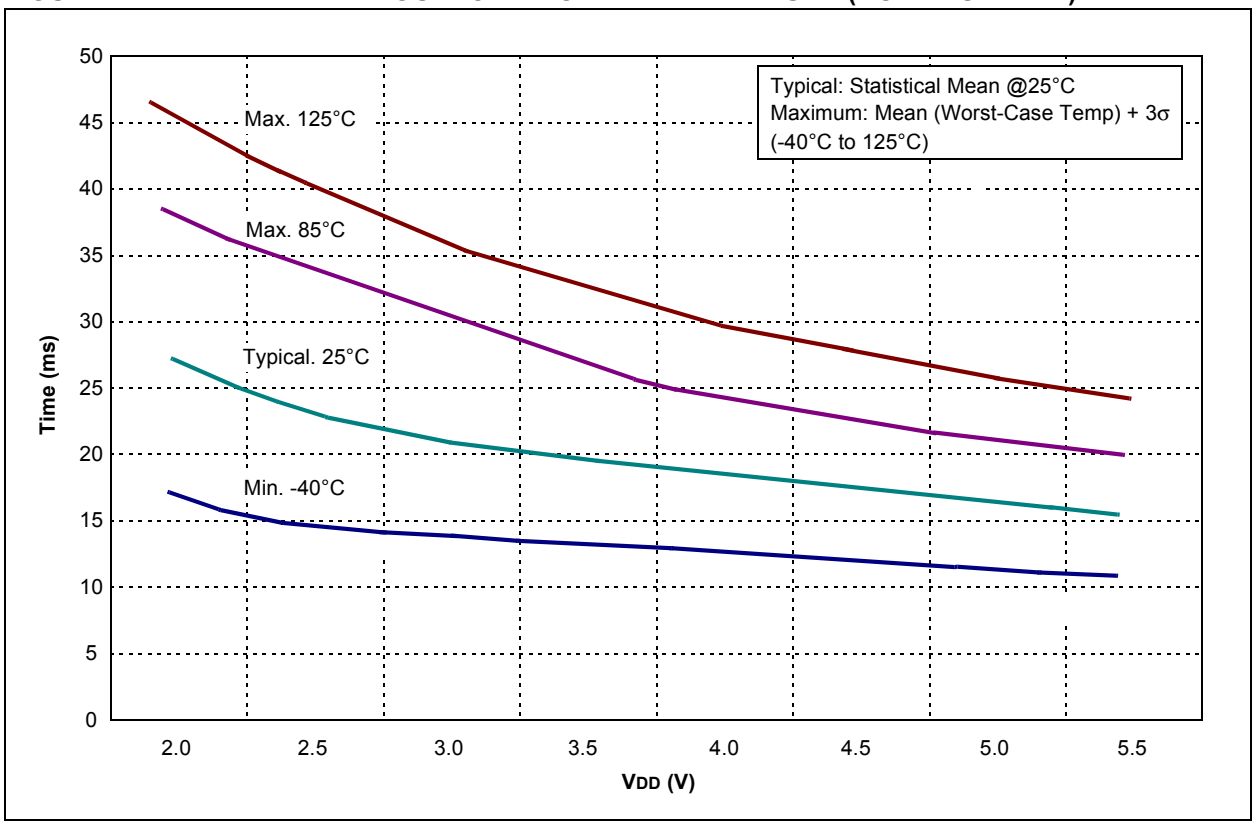

© 2007 Microchip Technology Inc.

FIGURE 14-8: VOL vs. IOL OVER TEMPERATURE (VDD = 3.0V)

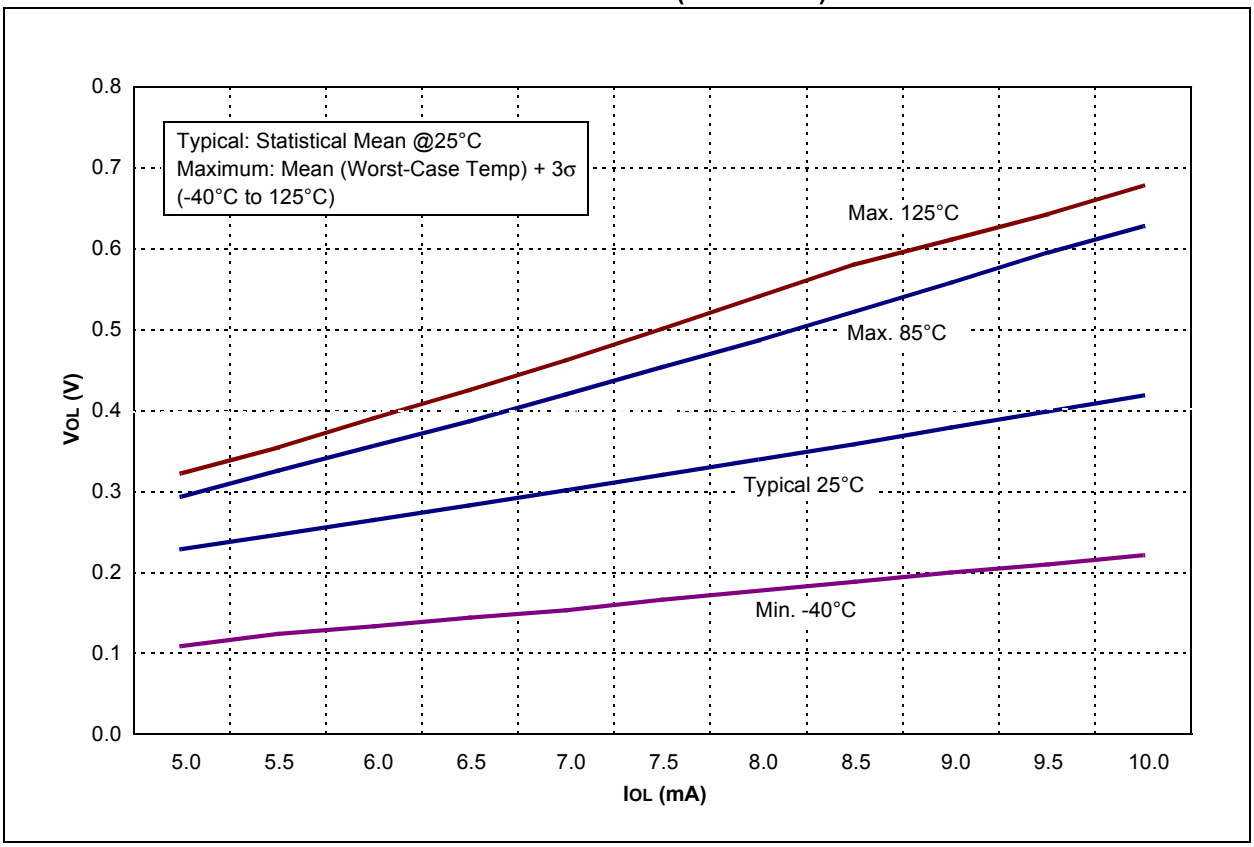

FIGURE 14-9: VOL vs. IOL OVER TEMPERATURE (VDD = 5.0V)

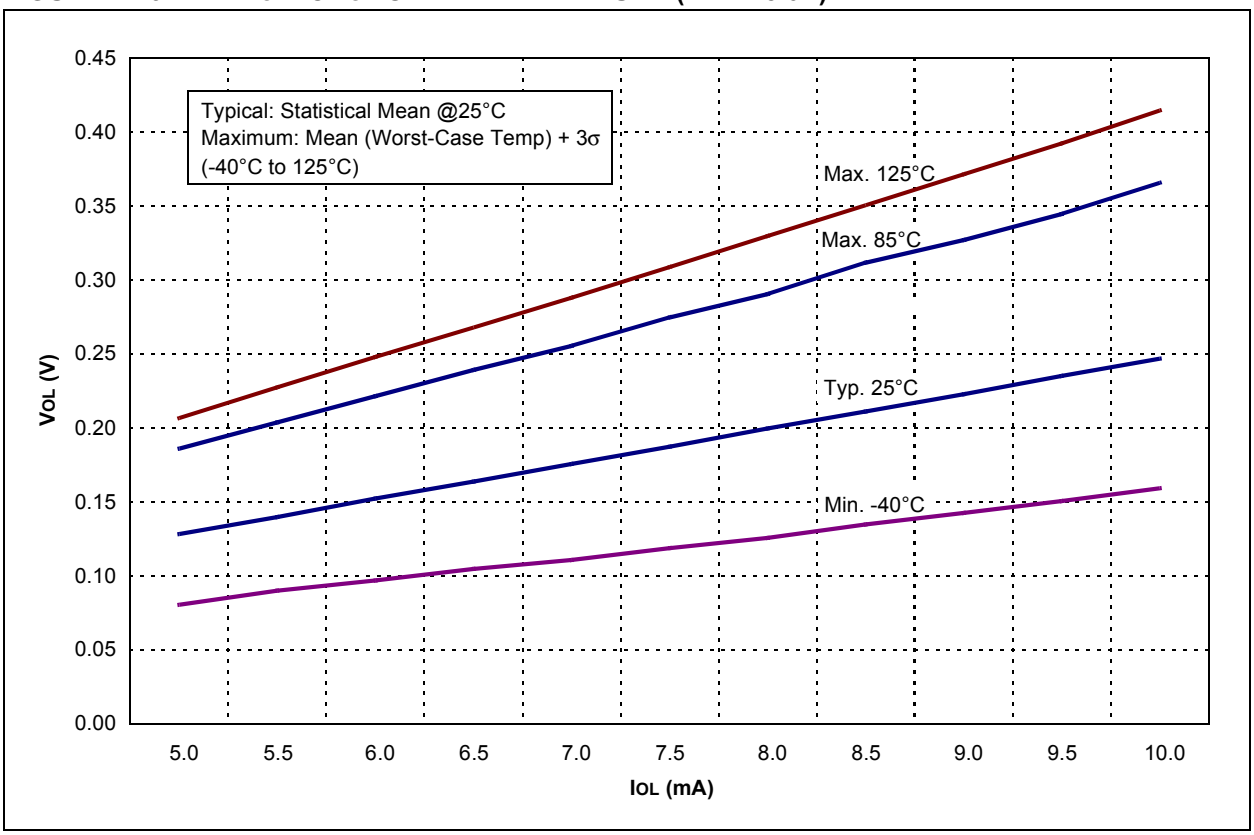

FIGURE 14-10: VOH vs. IOH OVER TEMPERATURE (VDD = 3.0V)

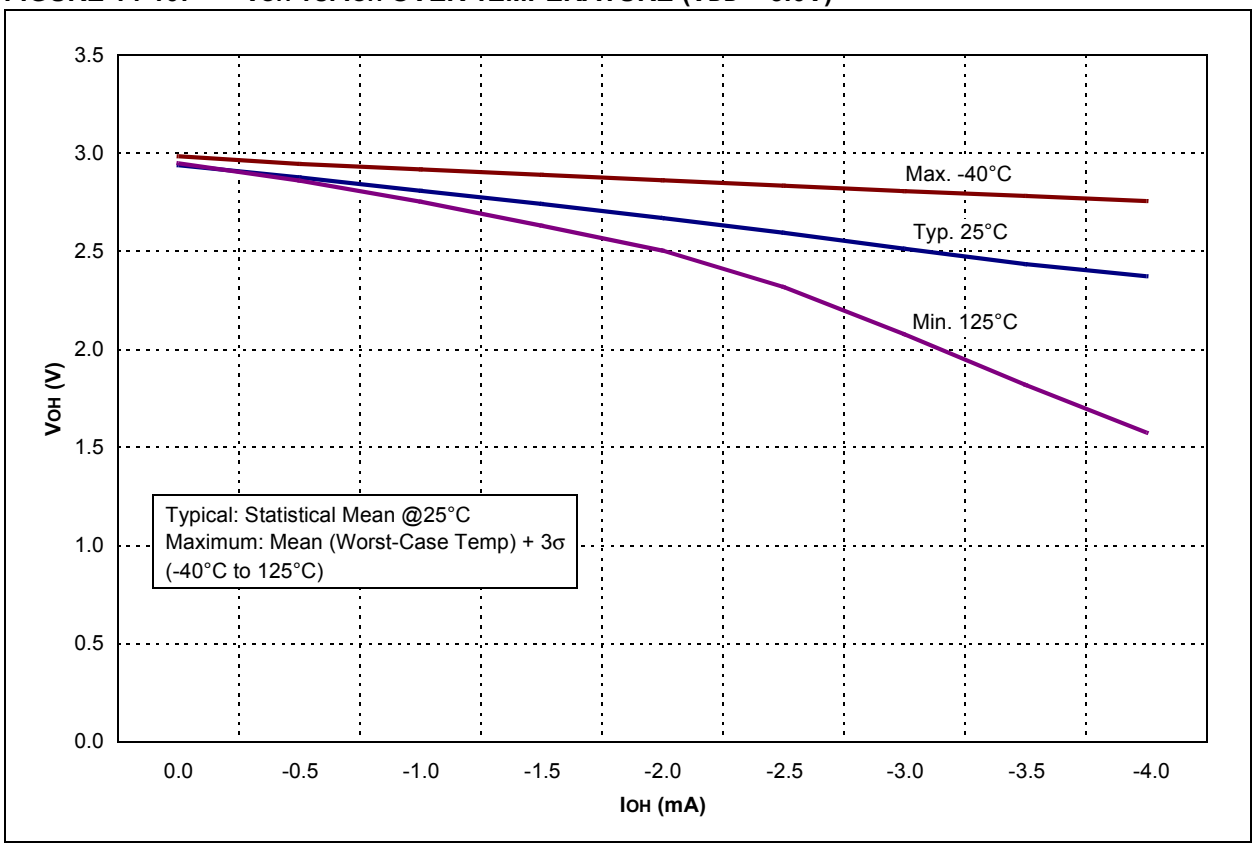

FIGURE 14-11: VOH vs. IOH OVER TEMPERATURE (VDD = 5.0V)

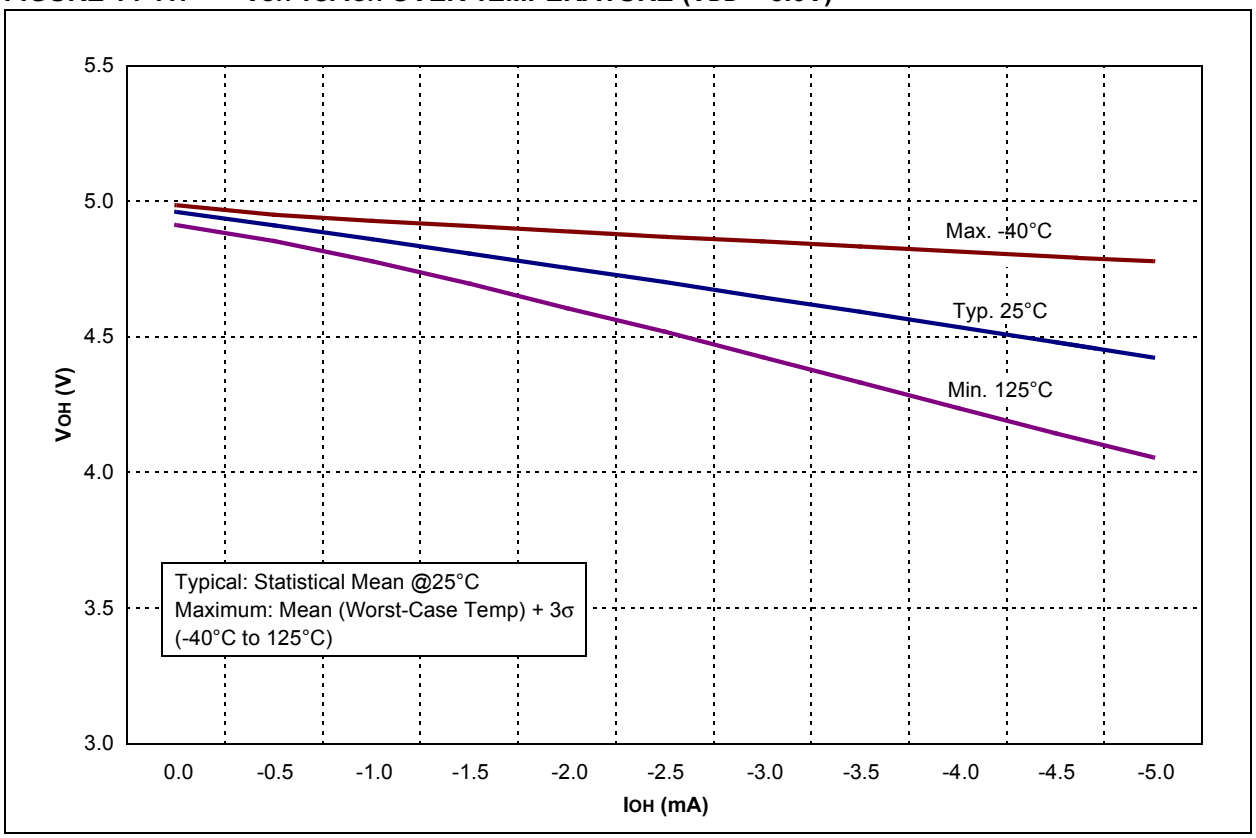

© 2007 Microchip Technology Inc.

FIGURE 14-12: TTL INPUT THRESHOLD VIN vs. VDD

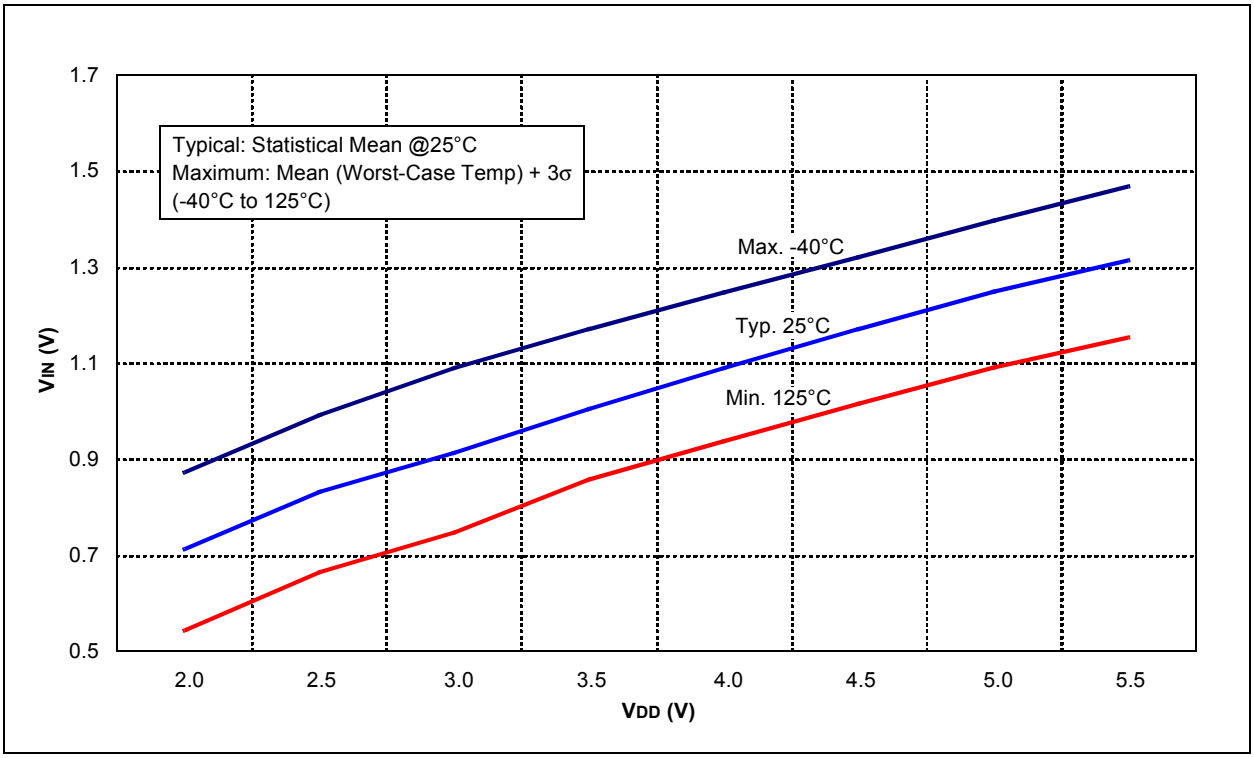

FIGURE 14-13: SCHMITT TRIGGER INPUT THRESHOLD VIN vs. VDD

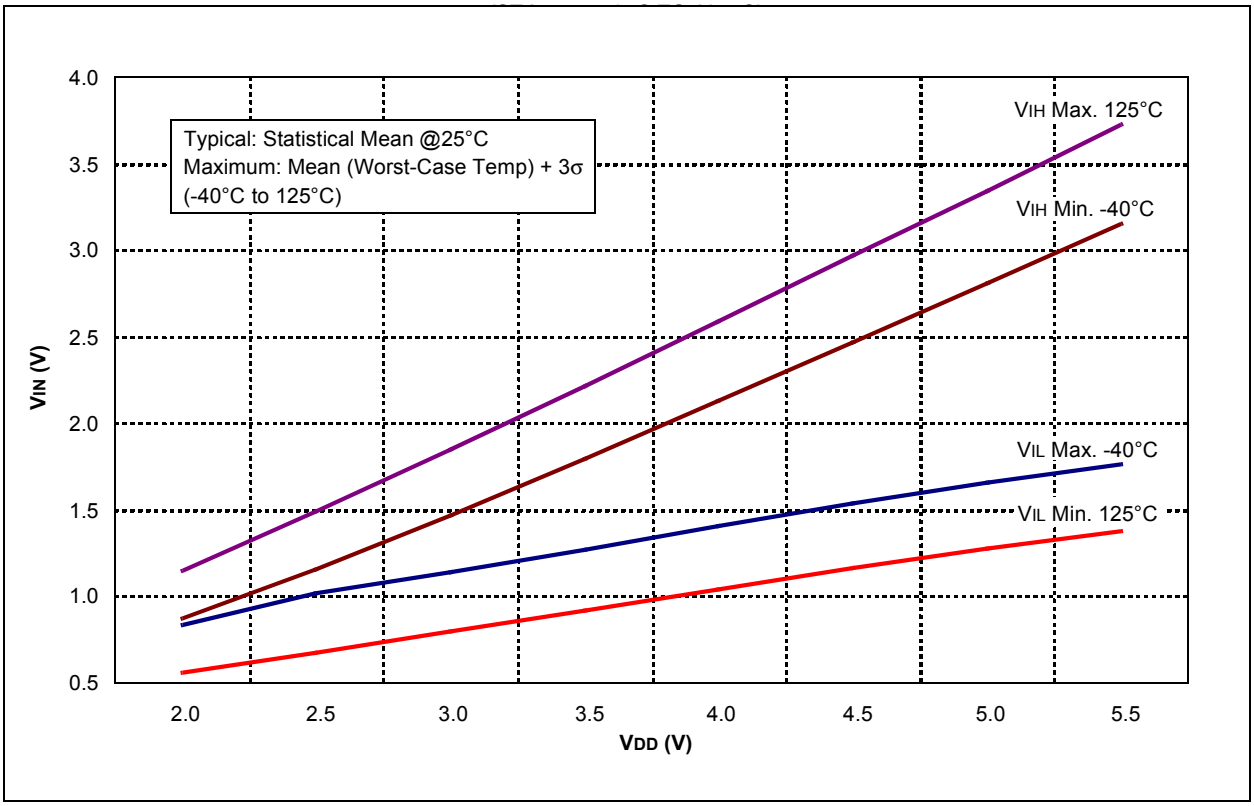

FIGURE 14-14: DEVICE RESET TIMER (HS, XT AND LP) vs. VDD

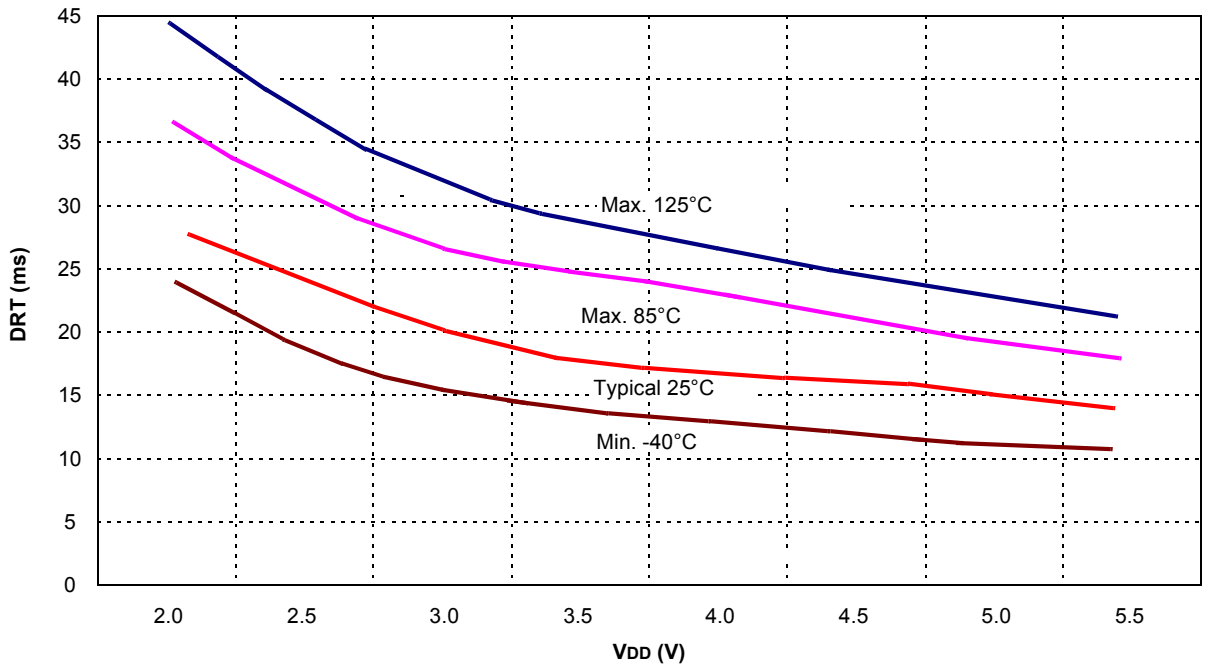

Note: See Table 13-7 if another clock mode is selected.

© 2007 Microchip Technology Inc.

15.0 PACKAGING

15.1 Package Marking Information

8-Lead PDIP



Example

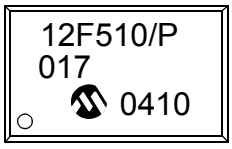

14-Lead PDIP

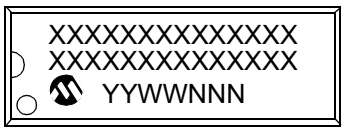

Example

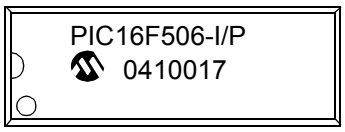

8-Lead SOIC (3.90 mm)

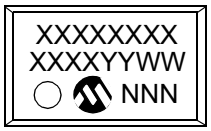

Example

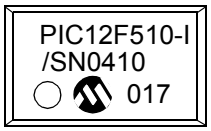

8-Lead 2x3 DFN*

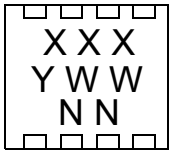

Example

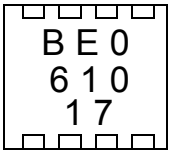

TABLE 15-1: 8-LEAD 2X3 DFN (MC) TOP MARKING

Part Number	Marking
PIC12F510(T)-I/MC	BS0
PIC12F510-E/MC	BT0

Legend:	XX...X	Customer-specific information
	Y	Year code (last digit of calendar year)
	YY	Year code (last 2 digits of calendar year)
	WW	Week code (week of January 1 is week ‘01’)
	NNN	Alphanumeric traceability code
	(e3)	Pb-free JEDEC designator for Matte Tin (Sn)
	*	This package is Pb-free. The Pb-free JEDEC designator ((e3)) can be found on the outer packaging for this package.

Note: In the event the full Microchip part number cannot be marked on one line, it will be carried over to the next line, thus limiting the number of available characters for customer-specific information.

* Standard PIC® device marking consists of Microchip part number, year code, week code and traceability code. For PIC device marking beyond this, certain price adders apply. Please check with your Microchip Sales Office. For QTP devices, any special marking adders are included in QTP price.

15.2 Package Marking Information (Cont'd)

14-Lead SOIC (3.90 mm)



Example

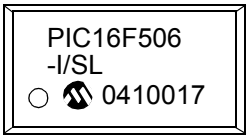

8-Lead MSOP



Example



14-Lead TSSOP (4.4 mm)

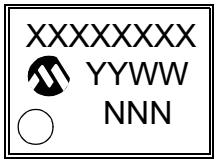

Example

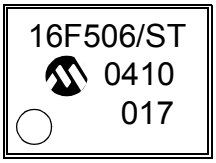

© 2007 Microchip Technology Inc.

8-Lead Plastic Dual In-Line (P) – 300 mil Body [PDIP]

Note: For the most current package drawings, please see the Microchip Packaging Specification located at http://www.microchip.com/packaging

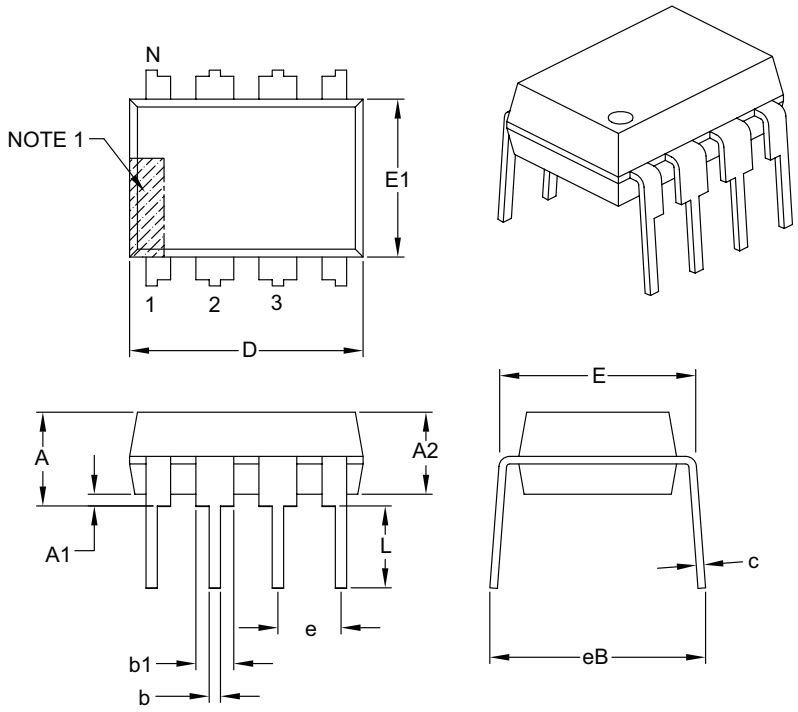

Units		INCHES		
Dimension Limits		MIN	NOM	MAX
Number of Pins	N		8	
Pitch	e		.100 BSC	
Top to Seating Plane	A	–	–	.210
Molded Package Thickness	A2	.115	.130	.195
Base to Seating Plane	A1	.015	–	–
Shoulder to Shoulder Width	E	.290	.310	.325
Molded Package Width	E1	.240	.250	.280
Overall Length	D	.348	.365	.400
Tip to Seating Plane	L	.115	.130	.150
Lead Thickness	c	.008	.010	.015
Upper Lead Width	b1	.040	.060	.070
Lower Lead Width	b	.014	.018	.022
Overall Row Spacing §	eB	–	–	.430

Notes:

1. Pin 1 visual index feature may vary, but must be located with the hatched area.
2. § Significant Characteristic.
3. Dimensions D and E1 do not include mold flash or protrusions. Mold flash or protrusions shall not exceed .010" per side.
4. Dimensioning and tolerancing per ASME Y14.5M.

   BSC: Basic Dimension. Theoretically exact value shown without tolerances.

Microchip Technology Drawing C04-018B

14-Lead Plastic Dual In-Line (P) – 300 mil Body [PDIP]

Note: For the most current package drawings, please see the Microchip Packaging Specification located at http://www.microchip.com/packaging

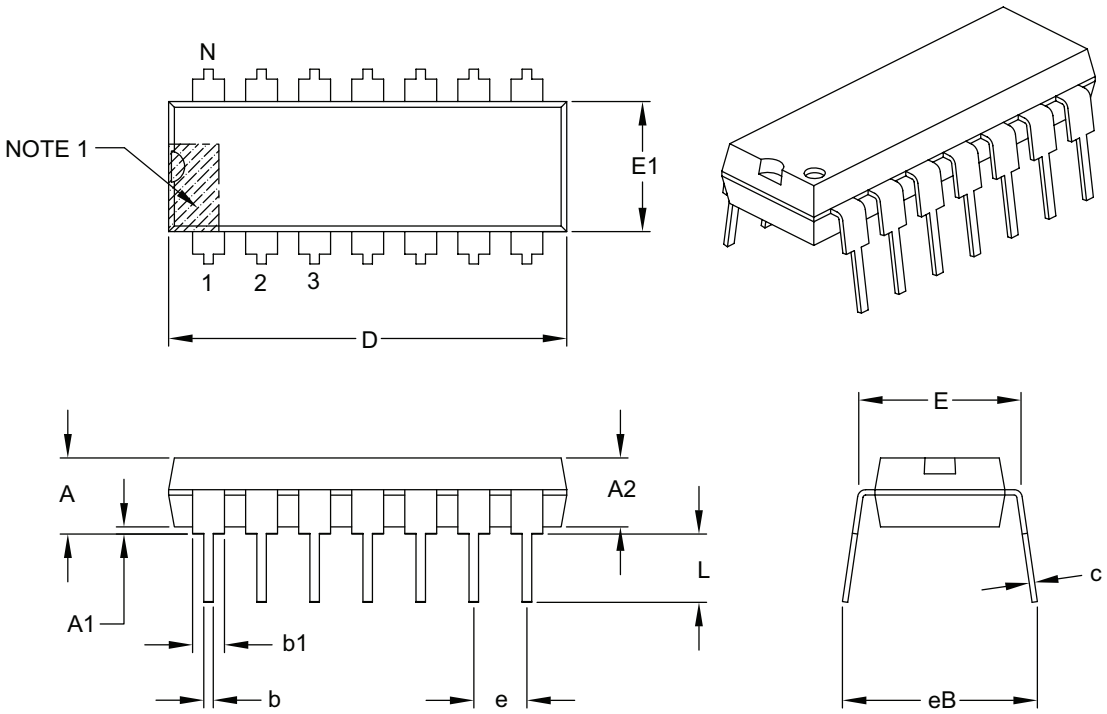

Units		INCHES		
Dimension Limits		MIN	NOM	MAX
Number of Pins	N		14	
Pitch	e		.100 BSC	
Top to Seating Plane	A	–	–	.210
Molded Package Thickness	A2	.115	.130	.195
Base to Seating Plane	A1	.015	–	–
Shoulder to Shoulder Width	E	.290	.310	.325
Molded Package Width	E1	.240	.250	.280
Overall Length	D	.735	.750	.775
Tip to Seating Plane	L	.115	.130	.150
Lead Thickness	c	.008	.010	.015
Upper Lead Width	b1	.045	.060	.070
Lower Lead Width	b	.014	.018	.022
Overall Row Spacing §	eB	–	–	.430

Notes:

1. Pin 1 visual index feature may vary, but must be located with the hatched area.
2. § Significant Characteristic.
3. Dimensions D and E1 do not include mold flash or protrusions. Mold flash or protrusions shall not exceed .010" per side.
4. Dimensioning and tolerancing per ASME Y14.5M.

   BSC: Basic Dimension. Theoretically exact value shown without tolerances.

Microchip Technology Drawing C04-005B

© 2007 Microchip Technology Inc.

8-Lead Plastic Small Outline (SN) – Narrow, 3.90 mm Body [SOIC]

Note: For the most current package drawings, please see the Microchip Packaging Specification located at http://www.microchip.com/packaging

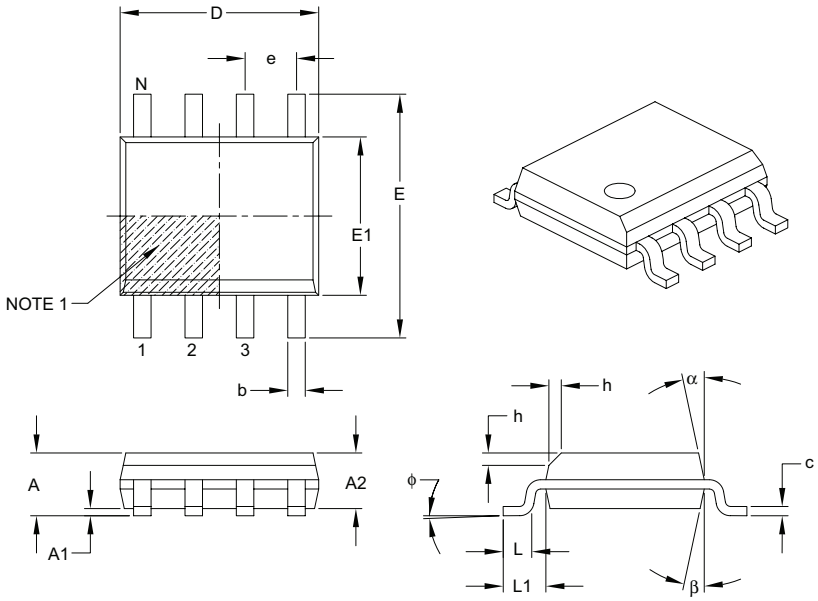

Units		MILLIMETERS		
Dimension Limits		MIN	NOM	MAX
Number of Pins	N		8	
Pitch	e		1.27 BSC	
Overall Height	A	–	–	1.75
Molded Package Thickness	A2	1.25	–	–
Standoff §	A1	0.10	–	0.25
Overall Width	E		6.00 BSC	
Molded Package Width	E1		3.90 BSC	
Overall Length	D		4.90 BSC	
Chamfer (optional)	h	0.25	–	0.50
Foot Length	L	0.40	–	1.27
Footprint	L1		1.04 REF	
Foot Angle	φ	0°	–	8°
Lead Thickness	c	0.17	–	0.25
Lead Width	b	0.31	–	0.51
Mold Draft Angle Top	α	5°	–	15°
Mold Draft Angle Bottom	β	5°	–	15°

Notes:

1. Pin 1 visual index feature may vary, but must be located within the hatched area.
2. § Significant Characteristic.
3. Dimensions D and E1 do not include mold flash or protrusions. Mold flash or protrusions shall not exceed 0.15 mm per side.
4. Dimensioning and tolerancing per ASME Y14.5M.

   BSC: Basic Dimension. Theoretically exact value shown without tolerances.

   REF: Reference Dimension, usually without tolerance, for information purposes only.

Microchip Technology Drawing C04-057B

8-Lead Plastic Small Outline (SN) – Narrow, 3.90 mm Body [SOIC]

Note: For the most current package drawings, please see the Microchip Packaging Specification located at http://www.microchip.com/packaging

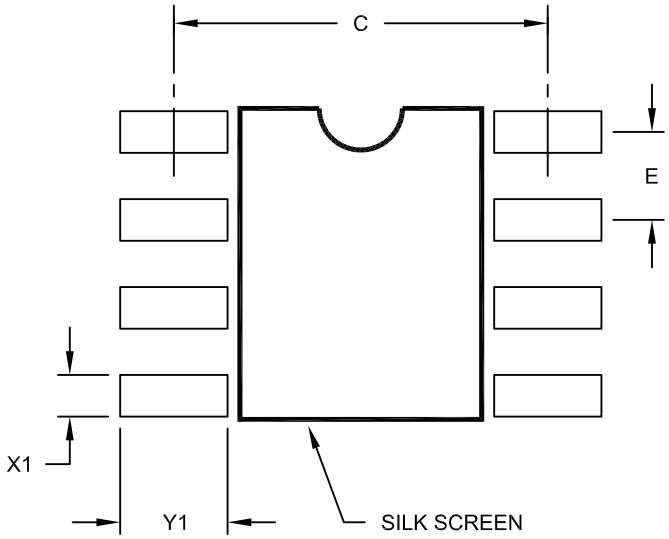

RECOMMENDED LAND PATTERN

Units		MILLIMETERS		
Dimension Limits		MIN	NOM	MAX
Contact Pitch	E		1.27 BSC	
Contact Pad Spacing	C		5.40	
Contact Pad Width (X8)	X1			0.60
Contact Pad Length (X8)	Y1			1.55

Notes:

1. Dimensioning and tolerancing per ASME Y14.5M

BSC: Basic Dimension. Theoretically exact value shown without tolerances.

Microchip Technology Drawing No. C04-2057A

© 2007 Microchip Technology Inc.

8-Lead Plastic Dual Flat, No Lead Package (MC) – 2x3x0.9 mm Body [DFN]

Note: For the most current package drawings, please see the Microchip Packaging Specification located at http://www.microchip.com/packaging

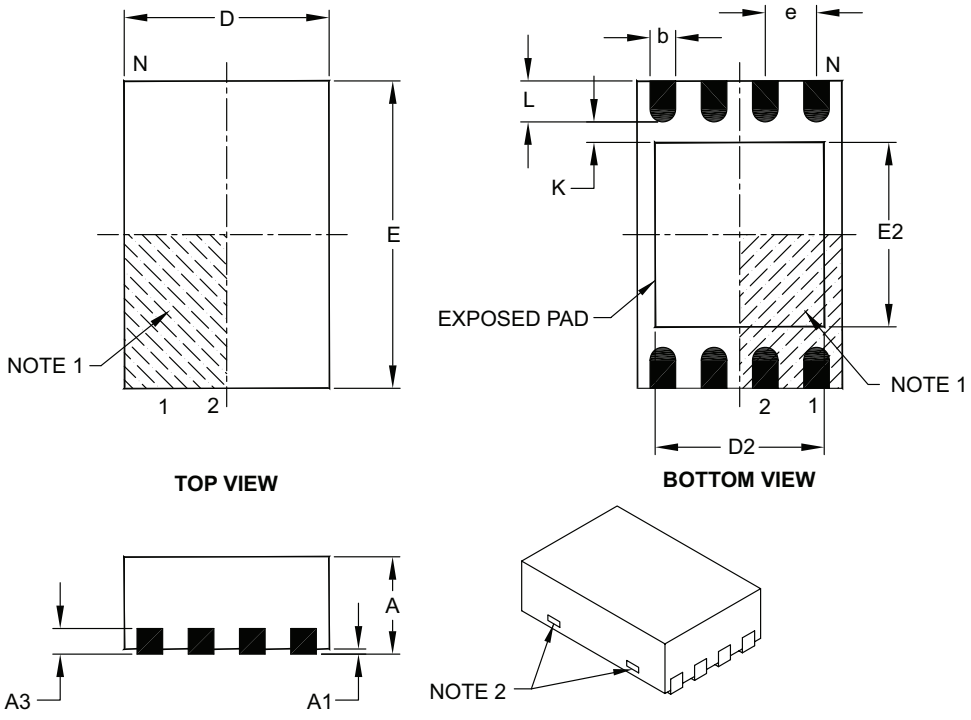

Units		MILLIMETERS		
Dimension Limits		MIN	NOM	MAX
Number of Pins	N		8	
Pitch	e		0.50 BSC	
Overall Height	A	0.80	0.90	1.00
Standoff	A1	0.00	0.02	0.05
Contact Thickness	A3		0.20 REF	
Overall Length	D		2.00 BSC	
Overall Width	E		3.00 BSC	
Exposed Pad Length	D2	1.30	–	1.75
Exposed Pad Width	E2	1.50	–	1.90
Contact Width	b	0.18	0.25	0.30
Contact Length	L	0.30	0.40	0.50
Contact-to-Exposed Pad	K	0.20	–	–

Notes:

1. Pin 1 visual index feature may vary, but must be located within the hatched area.
2. Package may have one or more exposed tie bars at ends.
3. Package is saw singulated.
4. Dimensioning and tolerancing per ASME Y14.5M.

BSC: Basic Dimension. Theoretically exact value shown without tolerances.
REF: Reference Dimension, usually without tolerance, for information purposes only.

Microchip Technology Drawing C04-123B

14-Lead Plastic Small Outline (SL) – Narrow, 3.90 mm Body [SOIC]

Note: For the most current package drawings, please see the Microchip Packaging Specification located at http://www.microchip.com/packaging

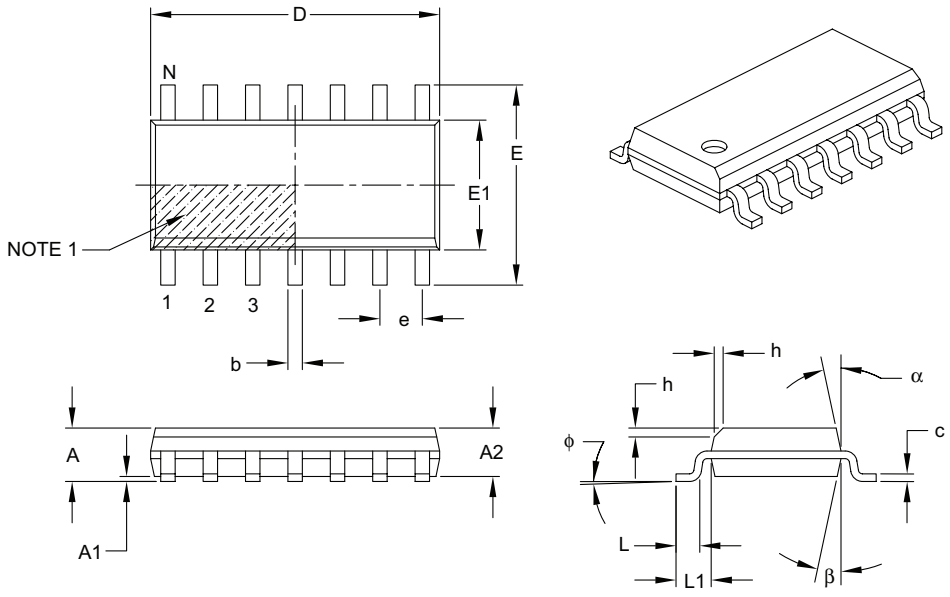

Units		MILLIMETERS		
Dimension Limits		MIN	NOM	MAX
Number of Pins	N		14	
Pitch	e		1.27 BSC	
Overall Height	A	–	–	1.75
Molded Package Thickness	A2	1.25	–	–
Standoff §	A1	0.10	–	0.25
Overall Width	E		6.00 BSC	
Molded Package Width	E1		3.90 BSC	
Overall Length	D		8.65 BSC	
Chamfer (optional)	h	0.25	–	0.50
Foot Length	L	0.40	–	1.27
Footprint	L1		1.04 REF	
Foot Angle	φ	0°	–	8°
Lead Thickness	c	0.17	–	0.25
Lead Width	b	0.31	–	0.51
Mold Draft Angle Top	α	5°	–	15°
Mold Draft Angle Bottom	β	5°	–	15°

Notes:

1. Pin 1 visual index feature may vary, but must be located within the hatched area.
2. § Significant Characteristic.
3. Dimensions D and E1 do not include mold flash or protrusions. Mold flash or protrusions shall not exceed 0.15 mm per side.
4. Dimensioning and tolerancing per ASME Y14.5M.

BSC: Basic Dimension. Theoretically exact value shown without tolerances.
REF: Reference Dimension, usually without tolerance, for information purposes only.

Microchip Technology Drawing C04-065B

© 2007 Microchip Technology Inc.

8-Lead Plastic Micro Small Outline Package (MS) [MSOP]

Note: For the most current package drawings, please see the Microchip Packaging Specification located at http://www.microchip.com/packaging

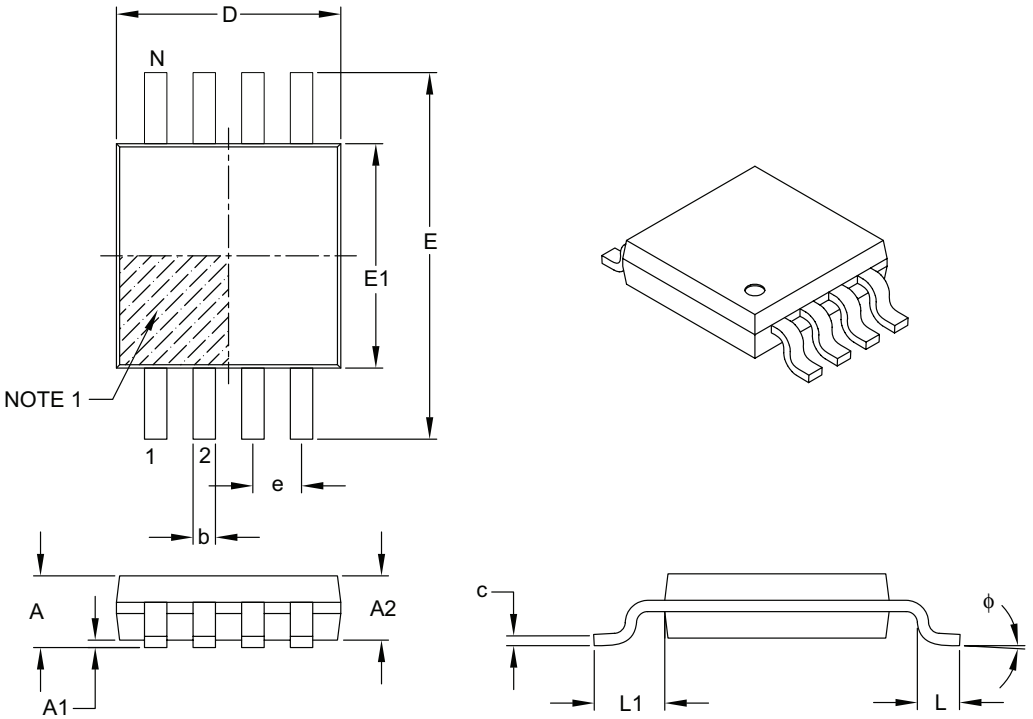

Units		MILLIMETERS		
Dimension Limits		MIN	NOM	MAX
Number of Pins	N		8	
Pitch	e		0.65 BSC	
Overall Height	A	–	–	1.10
Molded Package Thickness	A2	0.75	0.85	0.95
Standoff	A1	0.00	–	0.15
Overall Width	E		4.90 BSC	
Molded Package Width	E1		3.00 BSC	
Overall Length	D		3.00 BSC	
Foot Length	L	0.40	0.60	0.80
Footprint	L1		0.95 REF	
Foot Angle	ϕ	0°	–	8°
Lead Thickness	c	0.08	–	0.23
Lead Width	b	0.22	–	0.40

Notes:

1. Pin 1 visual index feature may vary, but must be located within the hatched area.
2. Dimensions D and E1 do not include mold flash or protrusions. Mold flash or protrusions shall not exceed 0.15 mm per side.
3. Dimensioning and tolerancing per ASME Y14.5M.

BSC: Basic Dimension. Theoretically exact value shown without tolerances.

REF: Reference Dimension, usually without tolerance, for information purposes only.

Microchip Technology Drawing C04-111B

14-Lead Plastic Thin Shrink Small Outline (ST) – 4.4 mm Body [TSSOP]

Note: For the most current package drawings, please see the Microchip Packaging Specification located at http://www.microchip.com/packaging

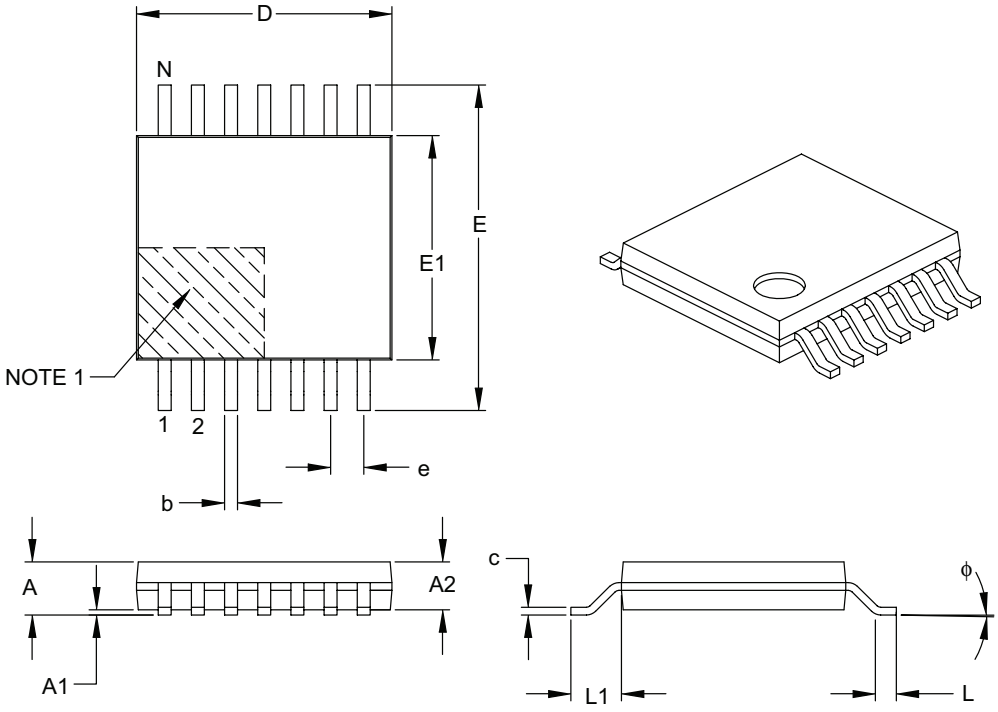

Units		MILLIMETERS		
Dimension Limits		MIN	NOM	MAX
Number of Pins	N		14	
Pitch	e		0.65 BSC	
Overall Height	A	–	–	1.20
Molded Package Thickness	A2	0.80	1.00	1.05
Standoff	A1	0.05	–	0.15
Overall Width	E		6.40 BSC	
Molded Package Width	E1	4.30	4.40	4.50
Molded Package Length	D	4.90	5.00	5.10
Foot Length	L	0.45	0.60	0.75
Footprint	L1		1.00 REF	
Foot Angle	ϕ	0°	–	8°
Lead Thickness	c	0.09	–	0.20
Lead Width	b	0.19	–	0.30

Notes:

1. Pin 1 visual index feature may vary, but must be located within the hatched area.
2. Dimensions D and E1 do not include mold flash or protrusions. Mold flash or protrusions shall not exceed 0.15 mm per side.
3. Dimensioning and tolerancing per ASME Y14.5M.

BSC: Basic Dimension. Theoretically exact value shown without tolerances.

REF: Reference Dimension, usually without tolerance, for information purposes only.

Microchip Technology Drawing C04-087B

© 2007 Microchip Technology Inc.

APPENDIX A: REVISION HISTORY

Revision A

Original release.

Revision B

Page 3 – Special Microcontroller Features and Low-Power Features sections.

PIC12F510 Pin Diagram.

Section 3.0 – Figure 3-1, Figure 3-2, Table 3-2, Table 3-3.

Section 4.0 – First paragraph, Section 4.2 - Figure references, Tables 4-1 and 4-2 (Note 1).

Section 5.0 – Table 5-2, Table 5-6 Title.

Section 6.0

Section 7.0 – First paragraph, Section 7.7, Register 7-1, Register 7-2, Register 7-3, Figure 7-1, Figure 7-2, Sections 7.4 through 7.7, Table 7-1.

Section 8.0 – Sections 8.0 through 8.2, Figure 8-1, Table 8-1.

Section 9.0 – Table 9-2, Register 9-1, Register 9-2, Table 9-3.

Section 10.0 – Registers 10-1 and 10-2 (Note 1), Table 10-2 (Note 2), Section 10.2.5, Section 10.3, Table 10-3, Table 10-4, Table 10-5, Section 10.4, Section 10.5, Section 10.6.1, Section 10.9, 10.9.1, 10.9.2, Section 10.11.

Section 13.0 – 13.1 DC Characteristics, 13.2 DC Characteristics, Table 13-1, Table 13-3, Table 13-4.

Revision C (03/2007)

Revised Table 3-2 GP3 and Legend; Revised Table 3-3 RB3 and Legend; Updated Registers to new format; Revised Section 9.1; Revised Table 9-2; Revised 13.1 DC Characteristics D025; Revised Table 13-2 and Table 13-3 and Notes; Replaced Package Drawings (Rev. AN); Added DFN package; Replaced Development Support Section; Revised Product ID System.

Revision D (11/2007)

Revised Table 1-1; Table 4-1, Table 4-2; Figure 4-5; Register 7-1 (Note 1); Register 8-1; Figure 13-4; 13.1 - 13.3; Table 13-1, Table 13-3, Table 13-6, Table 13-7, Table 13-9; Figure 14-4, Figure 14-14; Section 14.0; Packaging; Product ID System.

NOTES:

© 2007 Microchip Technology Inc.

INDEX

A

ALU 9
Assembler
    MPASM Assembler 80

B

Block Diagram
    Comparator for the PIC12F510 46
    Comparator for the PIC16F506 46
    On-Chip Reset Circuit 64
    Timer0 39
    TMR0/WDT Prescaler 42
    Watchdog Timer 67
Brown-Out Protection Circuit 68

C

C Compilers
    MPLAB C18 80
    MPLAB C30 80
Carry 9
Clocking Scheme 14
Code Protection 55, 69
Configuration Bits 55
Configuration Word (PIC12F510) 56
Configuration Word (PIC16F506) 57
Customer Change Notification Service 108
Customer Notification Service 108
Customer Support 108

D

DC 88
DC Characteristics (Extended) 87
DC Characteristics (Industrial) 86
DC Characteristics (Industrial, Extended) 88
Development Support 79
Digit Carry 9

E

Errata 3

F

Family of Devices
    PIC12F510/16F506 5
FSR 24

I

I/O Interfacing 27
I/O Ports 27
I/O Programming Considerations 37
ID Locations 55, 69
INDF 24
Indirect Data Addressing 24
Instruction Cycle 14
Instruction Flow/Pipelining 14
Instruction Set Summary 72
Internet Address 108

L

Loading of PC 23

M

Memory Organization 15
    Data Memory 16
    Program Memory (PIC12F510/16F506) 15
Microchip Internet Web Site 108
MPLAB ASM30 Assembler, Linker, Librarian 80
MPLAB ICD 2 In-Circuit Debugger 81
MPLAB ICE 2000 High-Performance Universal
    In-Circuit Emulator 81
MPLAB ICE 4000 High-Performance Universal
    In-Circuit Emulator 81
MPLAB Integrated Development Environment Software 79
MPLAB PM3 Device Programmer 81
MPLINK Object Linker/MPLIB Object Librarian 80

O

OPTION Register 20
OSC Selection 55
OSCCAL Register 22
Oscillator Configurations 58
Oscillator Types
    HS 58
    LP 58
    RC 58
    XT 58

P

PIC12F510/16F506 Device Varieties 7
PICSTART Plus Development Programmer 82
POR
    Device Reset Timer (DRT) 55, 66
    $\overline{PD}$ 68
    Power-on Reset (POR) 55
    $\overline{TO}$ 68
PORTB 27
Power-down Mode 69
Prescaler 41
Program Counter 23

Q

Q cycles 14

R

RC Oscillator 59
Reader Response 109
Read-Modify-Write 37
Register File Map
    PIC12F510 16
    PIC16F506 16
Registers
    Special Function 17
Reset 55
Reset on Brown-Out 68

S

Sleep 55, 69
Software Simulator (MPLAB SIM) 80
Special Features of the CPU 55
Special Function Registers 17
Stack 23
STATUS Register 9, 18, 51

T

Timer0
- Timer0 39
- Timer0 (TMR0) Module 39
- TMR0 with External Clock 41

Timing Diagrams and Specifications 91
Timing Parameter Symbology and Load Conditions 91
TRIS Registers 27

W

Wake-up from Sleep 69
Watchdog Timer (WDT) 55, 66
- Period 66
- Programming Considerations 66

WWW Address 108
WWW, On-Line Support 3

Z

Zero bit 9

© 2007 Microchip Technology Inc.

THE MICROCHIP WEB SITE

Microchip provides online support via our WWW site at www.microchip.com. This web site is used as a means to make files and information easily available to customers. Accessible by using your favorite Internet browser, the web site contains the following information:

- **Product Support** – Data sheets and errata, application notes and sample programs, design resources, user's guides and hardware support documents, latest software releases and archived software
- **General Technical Support** – Frequently Asked Questions (FAQ), technical support requests, online discussion groups, Microchip consultant program member listing
- **Business of Microchip** – Product selector and ordering guides, latest Microchip press releases, listing of seminars and events, listings of Microchip sales offices, distributors and factory representatives

CUSTOMER CHANGE NOTIFICATION SERVICE

Microchip's customer notification service helps keep customers current on Microchip products. Subscribers will receive e-mail notification whenever there are changes, updates, revisions or errata related to a specified product family or development tool of interest.

To register, access the Microchip web site at www.microchip.com, click on Customer Change Notification and follow the registration instructions.

CUSTOMER SUPPORT

Users of Microchip products can receive assistance through several channels:

- Distributor or Representative
- Local Sales Office
- Field Application Engineer (FAE)
- Technical Support
- Development Systems Information Line

Customers should contact their distributor, representative or field application engineer (FAE) for support. Local sales offices are also available to help customers. A listing of sales offices and locations is included in the back of this document.

Technical support is available through the web site at: http://support.microchip.com

READER RESPONSE

It is our intention to provide you with the best documentation possible to ensure successful use of your Microchip product. If you wish to provide your comments on organization, clarity, subject matter, and ways in which our documentation can better serve you, please FAX your comments to the Technical Publications Manager at (480) 792-4150.

Please list the following information, and use this outline to provide us with your comments about this document.

To: Technical Publications Manager Total Pages Sent _____

RE: Reader Response

From: Name _____

Company _____

Address _____

City / State / ZIP / Country _____

Telephone: (_____) _____ - _____ FAX: (_____) _____ - _____

Application (optional):

Would you like a reply? ___Y ___N

Device: PIC12F510/16F506 Literature Number: DS41268D

Questions:

1. What are the best features of this document?

2. How does this document meet your hardware and software development needs?

3. Do you find the organization of this document easy to follow? If not, why?

4. What additions to the document do you think would enhance the structure and subject?

5. What deletions from the document could be made without affecting the overall usefulness?

6. Is there any incorrect or misleading information (what and where)?

7. How would you improve this document?

© 2007 Microchip Technology Inc.

PRODUCT IDENTIFICATION SYSTEM

To order or obtain information, e.g., on pricing or delivery, refer to the factory or the listed sales office.

PART NO.	X	/XX	XXX
Device	Temperature Range	Package	Pattern

Device:	PIC16F506 PIC12F510 PIC16F506T(1) PIC12F510T(2) VDD range 2.0V to 5.5V	
Temperature Range:	I = -40°C to +85°C (Industrial) E = -40°C to +125°C (Extended)	
Package:	MC = 8L DFN 2x3 (DUAL Flatpack No-Leads)(3, 4) MS = Micro-Small Outline Package (MSOP)(3, 4) P = Plastic (PDIP)(4) SL = 14L Small Outline, 3.90 mm (SOIC)(4) SN = 8L Small Outline, 3.90 mm Narrow (SOIC)(4) ST = Thin Shrink Small Outline (TSSOP)(4)	
Pattern:	QTP, SQTP Code or Special Requirements (blank otherwise)	

Examples:

a) PIC16F506-E/P 301 = Extended Temp., PDIP package, QTP pattern #301

b) PIC16F506-I/SN = Industrial Temp., SOIC package

c) PIC16F506T-E/P = Extended Temp., PDIP package, Tape and Reel

Note 1: T = in tape and reel SOIC and TSSOP packages only

2: T = in tape and reel SOIC and MSOP packages only.

3: PIC12F510 only.

4: Pb-free.

WORLDWIDE SALES AND SERVICE

AMERICAS

Corporate Office
2355 West Chandler Blvd.
Chandler, AZ 85224-6199
Tel: 480-792-7200
Fax: 480-792-7277
Technical Support:
http://support.microchip.com
Web Address:
www.microchip.com

Atlanta
Duluth, GA
Tel: 678-957-9614
Fax: 678-957-1455

Boston
Westborough, MA
Tel: 774-760-0087
Fax: 774-760-0088

Chicago
Itasca, IL
Tel: 630-285-0071
Fax: 630-285-0075

Dallas
Addison, TX
Tel: 972-818-7423
Fax: 972-818-2924

Detroit
Farmington Hills, MI
Tel: 248-538-2250
Fax: 248-538-2260

Kokomo
Kokomo, IN
Tel: 765-864-8360
Fax: 765-864-8387

Los Angeles
Mission Viejo, CA
Tel: 949-462-9523
Fax: 949-462-9608

Santa Clara
Santa Clara, CA
Tel: 408-961-6444
Fax: 408-961-6445

Toronto
Mississauga, Ontario,
Canada
Tel: 905-673-0699
Fax: 905-673-6509

ASIA/PACIFIC

Asia Pacific Office
Suites 3707-14, 37th Floor
Tower 6, The Gateway
Harbour City, Kowloon
Hong Kong
Tel: 852-2401-1200
Fax: 852-2401-3431

Australia - Sydney
Tel: 61-2-9868-6733
Fax: 61-2-9868-6755

China - Beijing
Tel: 86-10-8528-2100
Fax: 86-10-8528-2104

China - Chengdu
Tel: 86-28-8665-5511
Fax: 86-28-8665-7889

China - Fuzhou
Tel: 86-591-8750-3506
Fax: 86-591-8750-3521

China - Hong Kong SAR
Tel: 852-2401-1200
Fax: 852-2401-3431

China - Nanjing
Tel: 86-25-8473-2460
Fax: 86-25-8473-2470

China - Qingdao
Tel: 86-532-8502-7355
Fax: 86-532-8502-7205

China - Shanghai
Tel: 86-21-5407-5533
Fax: 86-21-5407-5066

China - Shenyang
Tel: 86-24-2334-2829
Fax: 86-24-2334-2393

China - Shenzhen
Tel: 86-755-8203-2660
Fax: 86-755-8203-1760

China - Shunde
Tel: 86-757-2839-5507
Fax: 86-757-2839-5571

China - Wuhan
Tel: 86-27-5980-5300
Fax: 86-27-5980-5118

China - Xian
Tel: 86-29-8833-7252
Fax: 86-29-8833-7256

ASIA/PACIFIC

India - Bangalore
Tel: 91-80-4182-8400
Fax: 91-80-4182-8422

India - New Delhi
Tel: 91-11-4160-8631
Fax: 91-11-4160-8632

India - Pune
Tel: 91-20-2566-1512
Fax: 91-20-2566-1513

Japan - Yokohama
Tel: 81-45-471- 6166
Fax: 81-45-471-6122

Korea - Daegu
Tel: 82-53-744-4301
Fax: 82-53-744-4302

Korea - Seoul
Tel: 82-2-554-7200
Fax: 82-2-558-5932 or
82-2-558-5934

Malaysia - Kuala Lumpur
Tel: 60-3-6201-9857
Fax: 60-3-6201-9859

Malaysia - Penang
Tel: 60-4-227-8870
Fax: 60-4-227-4068

Philippines - Manila
Tel: 63-2-634-9065
Fax: 63-2-634-9069

Singapore
Tel: 65-6334-8870
Fax: 65-6334-8850

Taiwan - Hsin Chu
Tel: 886-3-572-9526
Fax: 886-3-572-6459

Taiwan - Kaohsiung
Tel: 886-7-536-4818
Fax: 886-7-536-4803

Taiwan - Taipei
Tel: 886-2-2500-6610
Fax: 886-2-2508-0102

Thailand - Bangkok
Tel: 66-2-694-1351
Fax: 66-2-694-1350

EUROPE

Austria - Wels
Tel: 43-7242-2244-39
Fax: 43-7242-2244-393

Denmark - Copenhagen
Tel: 45-4450-2828
Fax: 45-4485-2829

France - Paris
Tel: 33-1-69-53-63-20
Fax: 33-1-69-30-90-79

Germany - Munich
Tel: 49-89-627-144-0
Fax: 49-89-627-144-44

Italy - Milan
Tel: 39-0331-742611
Fax: 39-0331-466781

Netherlands - Drunen
Tel: 31-416-690399
Fax: 31-416-690340

Spain - Madrid
Tel: 34-91-708-08-90
Fax: 34-91-708-08-91

UK - Wokingham
Tel: 44-118-921-5869
Fax: 44-118-921-5820

10/05/07

© 2007 Microchip Technology Inc.