Fast, Low Noise CMOS 16-Bit Buffer/Line Driver

Product Features:

- V_{CC} = 5V ±10%
- Balanced output drivers: ±12 mA
- Output impedance: 35Ω (typical)
- Typical V_{OLP} (Output Ground Bounce) < 0.5V at V_{CC} = 5V, T_A = 25°C
- Bus Hold retains last active bus state during tri-state
- Hysteresis on all inputs
- Packages available:
  – 48-pin 240 mil wide plastic TSSOP (A)
  – 48-pin 300 mil wide plastic SSOP (V)
  – 48-pin 150 mil wide plastic BQSOP (B)
- Device models available on request

Product Description:

Pericom Semiconductor's PI74FCT series of logic circuits are produced in the Company's advanced 0.6 micron CMOS technology, achieving industry leading speed grades.

The PI74FCT162Q244T is a non-inverting 16-bit buffer/line driver designed for bus interface applications where low noise operation is essential.

The PI74FCT162Q244T is designed with current limiting resistors at its outputs to control the output edge rate resulting in lower ground bounce and undershoot. This device features a typical output impedance of 35Ω, eliminating the need for external terminating resistors for most bus interface applications. This noise suppression benefit is designated by the letter "Q" (for quiet) in the part number.

The PI74FCT162Q244T also features "Bus Hold" which retains the input's last state whenever the input goes to high-impedance preventing "floating" inputs and eliminating the need for pullup/down resistors.

This high-speed, low power device also features a flow-through organization for ease of board layout. These devices are designed with three-state controls to operate in a Quad-Nibble, Dual-Byte, or a single 16-bit word mode.

Logic Block Diagram

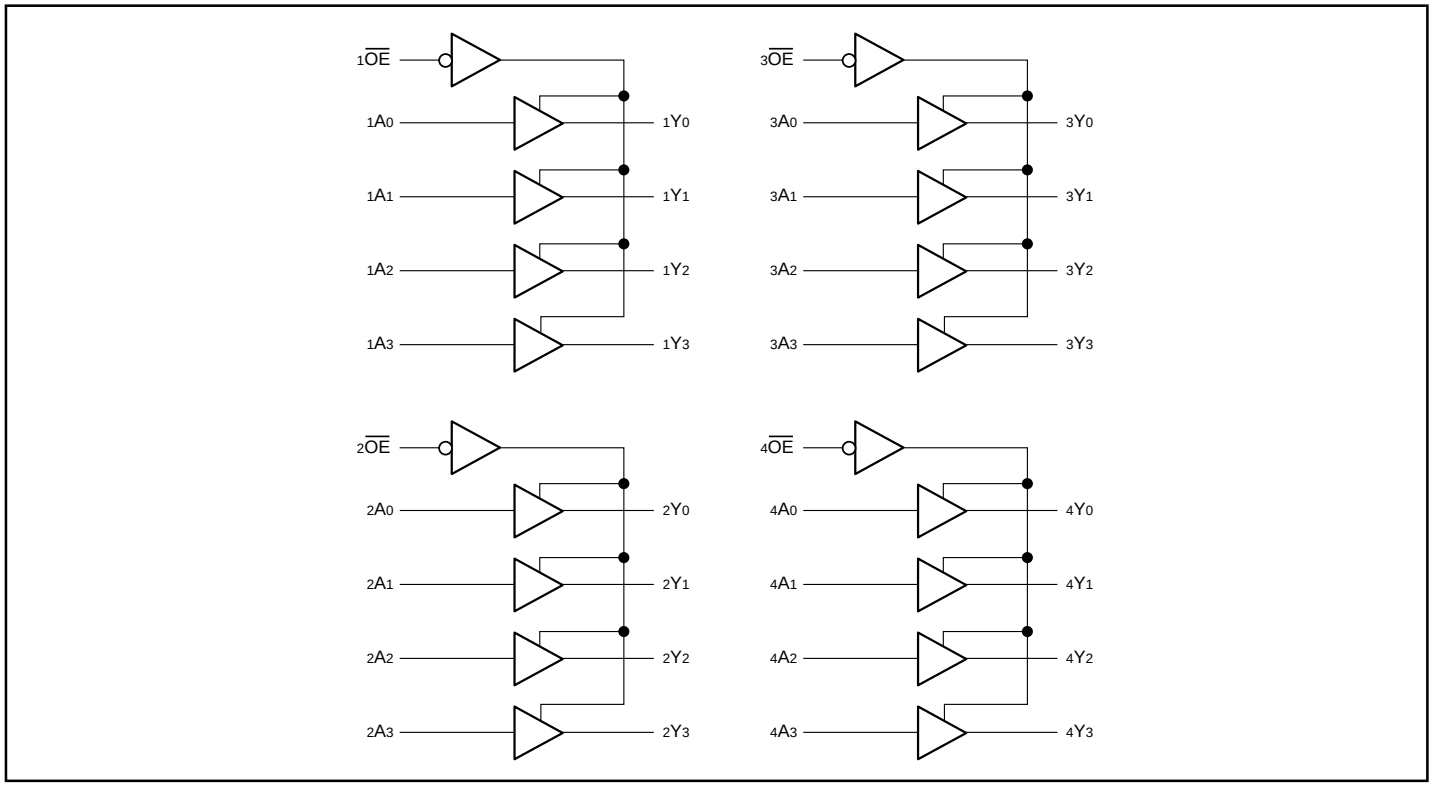

Product Pin Description

Pin Name	Description
x$\overline{OE}$	3-State Output Enable Inputs (Active LOW)
xAx	Inputs[1]
xYx	3-State Outputs
GND	Ground
VCC	Power

Note: 1. For the PI74FCT162Q244T, these pins have "Bus Hold." All other pins are standard, outputs, or I/Os.

Product Pin Configuration

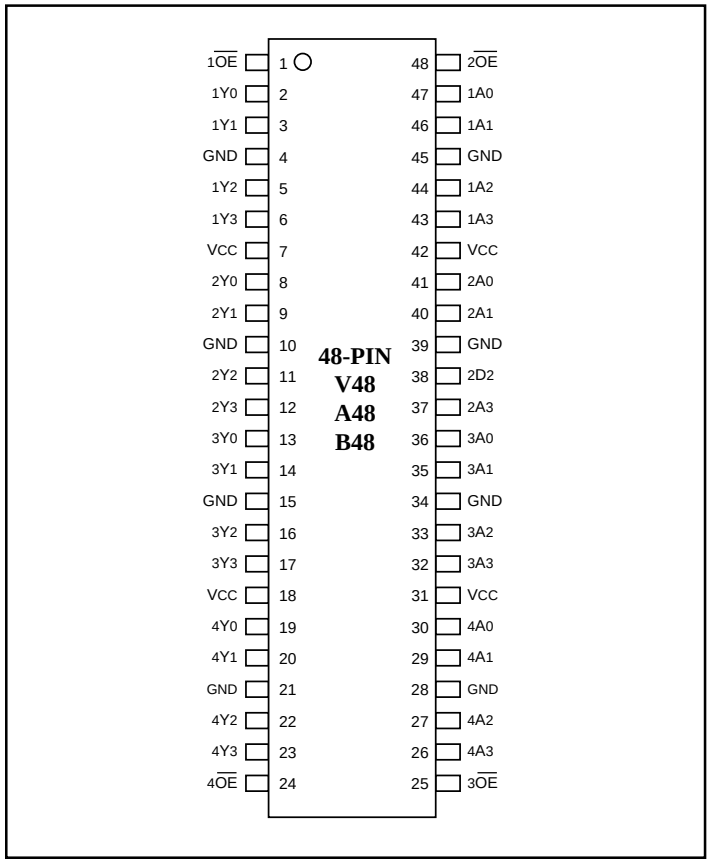

Truth Table

Inputs[1]		Outputs[1]
x$\overline{OE}$	xAx	xYx
L	L	L
L	H	H
H	X	Z

Note: 1. H = High Voltage Level
X = Don't Care
L = Low Voltage Level
Z = High Impedance

Maximum Ratings

(Above which the useful life may be impaired. For user guidelines, not tested.)

Storage Temperature	–65°C to +150°C
Ambient Temperature with Power Applied	–40°C to +85°C
Supply Voltage to Ground Potential (Inputs & Vcc Only)	–0.5V to +7.0V
Supply Voltage to Ground Potential (Outputs & D/O Only)	–0.5V to +7.0V
DC Input Voltage	–0.5V to +7.0V
DC Output Current	120 mA
Power Dissipation	1.0W

Note:
Stresses greater than those listed under MAXIMUM RATINGS may cause permanent damage to the device. This is a stress rating only and functional operation of the device at these or any other conditions above those indicated in the operational sections of this specification is not implied. Exposure to absolute maximum rating conditions for extended periods may affect reliability.

DC Electrical Characteristics (Over the Operating Range, T_A = –40°C to +85°C, V_{CC} = 5.0V ± 10%)

Parameters	Description	Test Conditions[1]		Min.	Typ[2]	Max.	Units
V_{IH}	Input HIGH Voltage	Guaranteed Logic HIGH Level		2.0			V
V_{IL}	Input LOW Voltage	Guaranteed Logic LOW Level				0.8	V
I_{IH}	Input HIGH Current	Standard Input, V_{CC} = Max.	V_{IN} = V_{CC}			1	µA
I_{IH}	Input HIGH Current	Bus Hold Input[4], V_{CC} = Max.	V_{IN} = V_{CC}			±100	µA
I_{IL}	Input LOW Current	Standard Input, V_{CC} = Min.	V_{IN} = GND			–1	µA
I_{IL}	Input LOW Current	Bus Hold Input[4], V_{CC} = Min.	V_{IN} = GND			±100	µA
I_{BHH}	Bus Hold	Bus Hold Input[4], V_{CC} = Min.	V_{IN} = 2.0V	–50			µA
I_{BHL}	Sustain Current		V_{IN} = 0.8V	+50			
I_{OZH}	High Impedance	V_{CC} = Max.	V_{OUT} = V_{CC}			1	µA
I_{OZL}	Output Current	V_{CC} = Max.	V_{OUT} = GND			–1	µA
V_{IK}	Clamp Diode Voltage	V_{CC} = Min., I_{IN} = –18 mA			–0.7	–1.2	V
I_O	Output Drive Current	V_{CC} = Max.[3], V_{OUT} = 2.5V		–50		–180	mA
V_H	Input Hysteresis				100		mV

Notes:
1. For Max. or Min. conditions, use appropriate value specified under Electrical Characteristics for the applicable device type.
2. Typical values are at V_{CC} = 5.0V, +25°C ambient and maximum loading.
3. Not more than one output should be shorted at one time. Duration of the test should not exceed one second.
4. Pins with Bus Hold are identified in the pin description.
5. This specification does not apply to bi-directional functionalities with Bus Hold.

Output Drive Characteristics (Over the Operating Range)

Parameters	Description	Test Conditions[1]	Min.	Typ[2]	Max.	Units
I_{ODL}	Output LOW Current	V_{CC} = 5V, V_{IN} = V_{IH} or V_{IL}, V_{OUT} = 1.5V[3]	36	—	—	mA
I_{ODH}	Output HIGH Current	V_{CC} = 5V, V_{IN} = V_{IH} or V_{IL}, V_{OUT} = 1.5V[3]	-100	-166	-200	mA

Output Drive Characteristics (Over the Operating Range)

Parameters	Description	Test Conditions[1]		Min.	Typ[2]	Max.	Units
V_{OH}	Output HIGH Voltage	V_{CC} = Min., V_{IN} = V_{IH} or V_{IL}	I_{OH} = –12.0 mA	2.4	3.3	—	V
V_{OL}	Output LOW Voltage	V_{CC} = Min., V_{IN} = V_{IH} or V_{IL}	I_{OL} = 12 mA	—	0.4	0.55	V

Capacitance (T_A = 25°C, f = 1 MHz)

Parameters[4]	Description	Test Conditions	Typ	Max.	Units
C_{IN}	Input Capacitance	V_{IN} = 0V	4.5	6	pF
C_{OUT}	Output Capacitance	V_{OUT} = 0V	5.5	8	pF

Notes:
1. For Max. or Min. conditions, use appropriate value specified under Electrical Characteristics for the applicable device type.
2. Typical values are at V_{CC} = 5.0V, +25°C ambient and maximum loading.
3. Not more than one output should be tested at one time. Duration of the test should not exceed one second.
4. This parameter is determined by device characterization but is not production tested.

Power Supply Characteristics

Parameters	Description	Test Conditions[1]		Min.	Typ[2]	Max.	Units
I_{CC}	Quiescent Power Supply Current	V_{CC} = Max.	V_{IN} = GND or V_{CC}		0.1	500	µA
ΔI_{CC}	Supply Current per Input @ TTL HIGH	V_{CC} = Max.	V_{IN} = 3.4V[3]		0.5	1.5	mA
I_{CCD}	Supply Current per Input per MHz[4]	V_{CC} = Max., Outputs Open $x\overline{OE}$ = GND One Bit Toggling 50% Duty Cycle	V_{IN} = V_{CC} V_{IN} = GND		60	100	µA/ MHz
I_C	Total Power Supply Current[6]	V_{CC} = Max., Outputs Open f_i = 10 MHz 50% Duty Cycle $x\overline{OE}$ = GND	V_{IN} = V_{CC} V_{IN} = GND		0.6	1.5[5]	mA
		One Bit Toggling	V_{IN} = 3.4V V_{IN} = GND		0.9	2.3[5]	
		V_{CC} = Max., Outputs Open f_i = 2.5 MHz 50% Duty Cycle $x\overline{OE}$ = GND	V_{IN} = V_{CC} V_{IN} = GND		2.4	4.5[5]	
		16 Bits Toggling	V_{IN} = 3.4V V_{IN} = GND		6.4	16.5[5]	

Notes:
1. For Max. or Min. conditions, use appropriate value specified under Electrical Characteristics for the applicable device.
2. Typical values are at V_{CC} = 5.0V, +25°C ambient.
3. Per TTL driven input (V_{IN} = 3.4V); all other inputs at Vcc or GND.
4. This parameter is not directly testable, but is derived for use in Total Power Supply Calculations.
5. Values for these conditions are examples of the Icc formula. These limits are guaranteed but not tested.
6. $I_C = I_{QUIESCENT} + I_{INPUTS} + I_{DYNAMIC}$
   $I_C = I_{CC} + \Delta I_{CC} D_H N_T + I_{CCD} (f_{CP}/2 + f_i N_i)$
   I_{CC} = Quiescent Current
   ΔI_{CC} = Power Supply Current for a TTL High Input (V_{IN} = 3.4V)
   D_H = Duty Cycle for TTL Inputs High
   N_T = Number of TTL Inputs at D_H
   I_{CCD} = Dynamic Current Caused by an Input Transition Pair (HLH or LHL)
   f_{CP} = Clock Frequency for Register Devices (Zero for Non-Register Devices)
   f_i = Input Frequency
   N_i = Number of Inputs at f_i
   All currents are in milliamps and all frequencies are in megahertz.

Switching Characteristics over Operating Range

Parameters	Description	Conditions[1]	162Q244T Com. Min	162Q244T Com. Max	162Q244AT Com. Min	162Q244AT Com. Max	162Q244CT Com. Min	162Q244CT Com. Max	162Q244DT Com. Min	162Q244DT Com. Max	162Q244ET Com. Min	162Q244ET Com. Max	Unit
t_{PLH} t_{PHL}	Propagation Delay xAx to xYx	C_L = 50 pF R_L = 500Ω	1.5	6.5	1.5	4.8	1.5	4.1	1.5	3.8	1.5	3.2	ns
t_{PZH} t_{PZL}	Output Enable Time x$\overline{OE}$ to xAx or xYx		1.5	8.0	1.5	6.2	1.5	5.8	1.5	4.8	1.5	4.4	ns
t_{PHZ} t_{PLZ}	Output Disable Time[3] x$\overline{OE}$ to xAx or xYx		1.5	7.0	1.5	5.6	1.5	5.2	1.5	4.0	1.5	4.0	ns
$t_{SK(o)}$	Output Skew[4]		—	0.5	—	0.5	—	0.5	—	0.5	—	0.5	ns

Notes:
1. See test circuit and wave forms.
2. Minimum limits are guaranteed but not tested on Propagation Delays.
3. This parameter is guaranteed but not production tested.
4. Skew between any two outputs, of the same package, switching in the same direction. This parameter is guaranteed by design.