PI74FCT16240T
PI74FCT162240T
PI74FCT162H240T

Fast CMOS 16-Bit Buffer/Line Drivers

Product Features:

Common Features:

- PI74FCT16240T, PI74FCT162240T, and PI74FCT162H240T are high-speed, low power devices with high current drive
- V_{CC} = 5 V ±10%
- Hysteresis on all inputs
- Packages available:
  - 48-pin 240 mil wide plastic TSSOP (A)
  - 48-pin 300 mil wide plastic SSOP (V)

PI74FCT16240T Features:

- High output drive: I_{OH} = –32 mA; I_{OL} = 64 mA
- Power off disable outputs permit "live insertion"
- Typical V_{OLP} (Output Ground Bounce) < 1.0V at V_{CC} = 5V, T_A = 25°C

PI74FCT162240T Features:

- Balanced output drivers: ±24 mA
- Reduced system switching noise
- Typical V_{OLP} (Output Ground Bounce) < 0.6V at V_{CC} = 5V, T_A = 25°C

PI74FCT162H240T Features:

- Bus Hold retains last active bus state during 3-state
- Eliminates the need for external pull-up resistors

Product Description:

Pericom Semiconductor's PI74FCT series of logic circuits are produced in the Company's advanced 0.6 micron CMOS technology, achieving industry leading speed grades.

The PI74FCT16240T, PI74FCT162240T, and PI74FCT162H240T are inverting 16-bit buffer/line drivers designed for applications driving high capacitance loads and low impedance backplanes. These high-speed, low power devices offer bus/backplane interface capability and a flow-through organization for ease of board layout. These devices are designed with three-state controls to operate in a Quad-Nibble, Dual-Byte, or a single 16-bit word mode.

The PI74FCT16240T output buffers are designed with a Power-Off disable allowing "live insertion" of boards when used as backplane drivers.

The PI74FCT162240T has ±24 mA balanced output drivers. It is designed with current limiting resistors at its outputs to control the output edge rate resulting in lower ground bounce and undershoot. This eliminates the need for external terminating resistors for most interface applications.

The PI74FCT162H240T has "Bus Hold" which retains the input's last state whenever the input goes to high-impedance preventing "floating" inputs and eliminating the need for pull-up/down resistors.

Logic Block Diagram

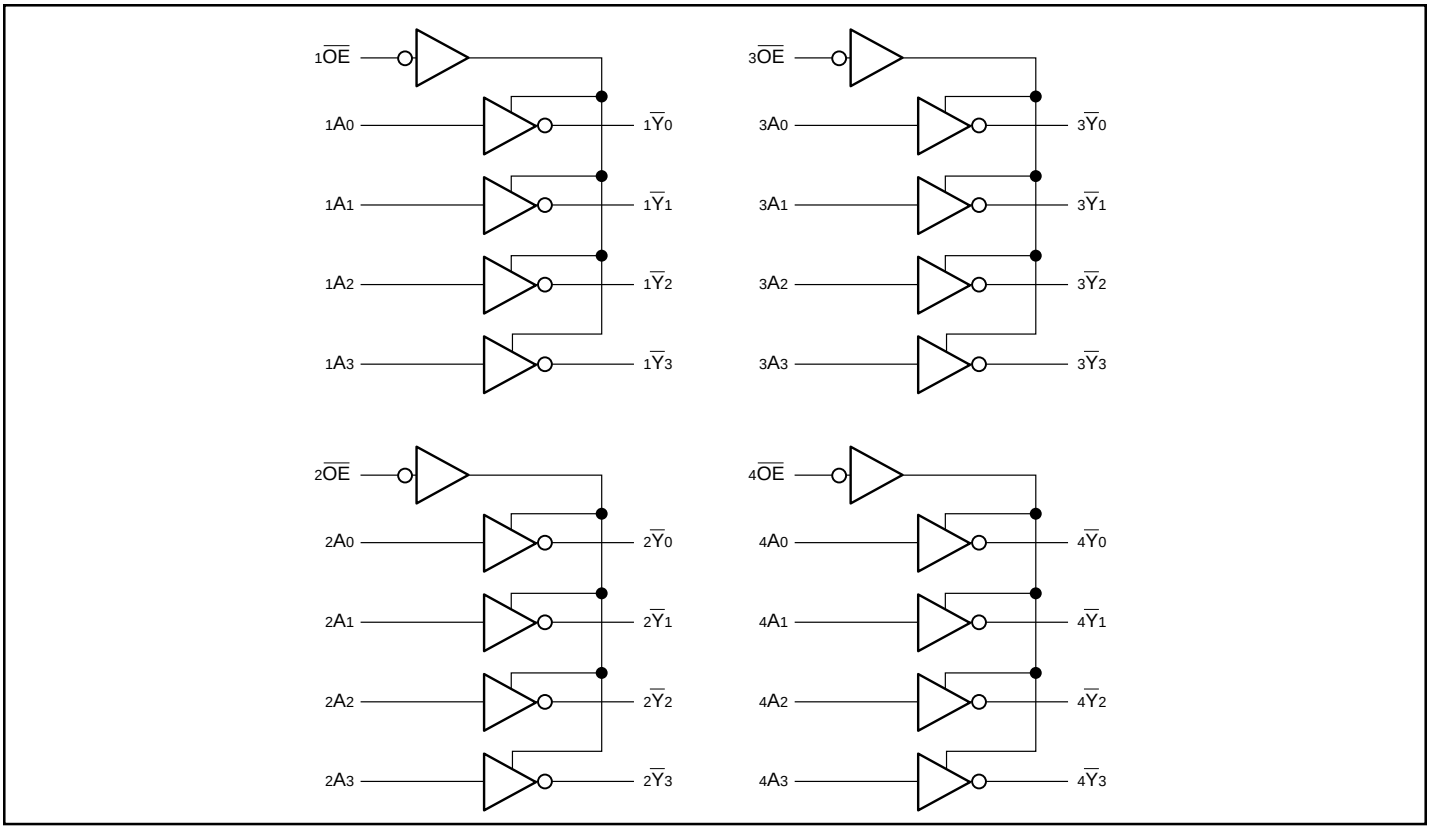

PS2030A 03/11/96

Product Pin Description

Pin Name	Description
x$\overline{OE}$	3-State Output Enable Inputs (Active LOW)
xAx	Inputs[1]
x$\overline{Y}$x	3-State Outputs
GND	Ground
VCC	Power

Note: 1. For the PI74FCT162H240T, these pins have "Bus Hold." All other pins are standard, outputs, or I/Os.

Truth Table

Inputs[1]		Outputs[1]
x$\overline{OE}$	xAx	x$\overline{Y}$x
L	L	H
L	H	L
H	X	Z

Note: 1. H = High Voltage Level
X = Don't Care
L = Low Voltage Level
Z = High Impedance

Product Pin Configuration

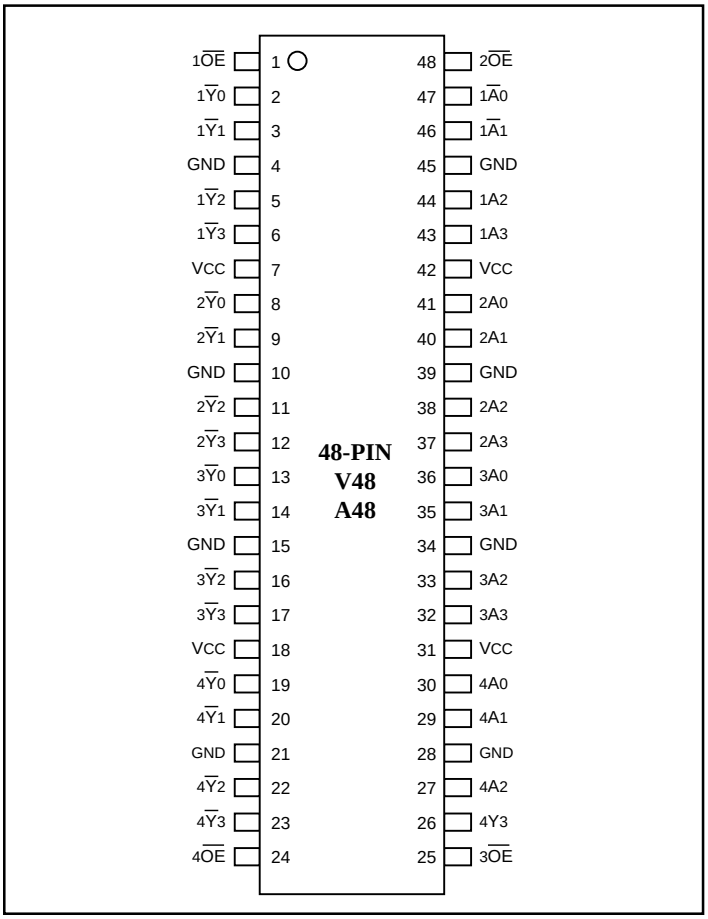

Maximum Ratings

(Above which the useful life may be impaired. For user guidelines, not tested.)

Storage Temperature	–65°C to +150°C
Ambient Temperature with Power Applied	–40°C to +85°C
Supply Voltage to Ground Potential (Inputs & Vcc Only)	–0.5V to +7.0V
Supply Voltage to Ground Potential (Outputs & D/O Only)	–0.5V to +7.0V
DC Input Voltage	–0.5V to +7.0V
DC Output Current	120mA
Power Dissipation	1.0W

Note:
Stresses greater than those listed under MAXIMUM RATINGS may cause permanent damage to the device. This is a stress rating only and functional operation of the device at these or any other conditions above those indicated in the operational sections of this specification is not implied. Exposure to absolute maximum rating conditions for extended periods may affect reliability.

DC Electrical Characteristics (Over the Operating Range, T_A = –40°C to +85°C, V_{CC} = 5.0V ± 10%)

Parameters	Description	Test Conditions[1]		Min.	Typ[2]	Max.	Units
V_{IH}	Input HIGH Voltage	Guaranteed Logic HIGH Level		2.0			V
V_{IL}	Input LOW Voltage	Guaranteed Logic LOW Level				0.8	V
I_{IH}	Input HIGH Current	Standard Input, V_{CC} = Max.	$V_{IN} = V_{CC}$			1	µA
I_{IH}	Input HIGH Current	Standard I/O, V_{CC} = Max.	$V_{IN} = V_{CC}$			1	µA
I_{IH}	Input HIGH Current	Bus Hold Input[4], V_{CC} = Max.	$V_{IN} = V_{CC}$			±100	µA
I_{IH}	Input HIGH Current	Bus Hold I/O[4], V_{CC} = Max.	$V_{IN} = V_{CC}$			±100	µA
I_{IL}	Input LOW Current	Standard Input, V_{CC} = Min.	V_{IN} = GND			–1	µA
I_{IL}	Input LOW Current	Standard I/O, V_{CC} = Min.	V_{IN} = GND			–1	µA
I_{IL}	Input LOW Current	Bus Hold Input[4], V_{CC} = Min.	V_{IN} = GND			±100	µA
I_{IL}	Input LOW Current	Bus Hold I/O[4], V_{CC} = Min.	V_{IN} = GND			±100	µA
I_{BHH}	Bus Hold	Bus Hold Input[4], V_{CC} = Min.	V_{IN} = 2.0V	–50			µA
I_{BHL}	Sustain Current		V_{IN} = 0.8V	+50			
I_{OZH}[5]	High Impedance	V_{CC} = Max.	V_{OUT} = 2.7V			1	µA
I_{OZL}[5]	Output Current	V_{CC} = Max.	V_{OUT} = 0.5V			–1	µA
V_{IK}	Clamp Diode Voltage	V_{CC} = Min., I_{IN} = –18 mA			–0.7	–1.2	V
I_{OS}	Short Circuit Current	V_{CC} = Max.[3], V_{OUT} = GND		–80	–140	–200	mA
I_O	Output Drive Current	V_{CC} = Max.[3], V_{OUT} = 2.5V		–50		–180	mA
V_H	Input Hysteresis				100		mV

Notes:
1. For Max. or Min. conditions, use appropriate value specified under Electrical Characteristics for the applicable device type.
2. Typical values are at Vcc = 5.0V, +25°C ambient and maximum loading.
3. Not more than one output should be shorted at one time. Duration of the test should not exceed one second.
4. Pins with Bus Hold are identified in the pin description.
5. This specification does not apply to bi-directional functionalities with Bus Hold.

PI74FCT16240T Output Drive Characteristics (Over the Operating Range)

Parameters	Description	Test Conditions[1]		Min.	Typ[2]	Max.	Units
V_{OH}	Output HIGH Voltage	V_{CC} = Min., V_{IN} = V_{IH} or V_{IL}	I_{OH} = –3.0 mA	2.5	3.5		V
			I_{OH} = –15.0 mA	2.4	3.5		
			I_{OH} = –32.0 mA	2.0	3.0		
V_{OL}	Output LOW Voltage	V_{CC} = Min., V_{IN} = V_{IH} or V_{IL}	I_{OL} = 64 mA		0.2	0.55	V
I_{OFF}	Power Down Disable	V_{CC} = 0V, V_{IN} or $V_{OUT} \leq$ 4.5V		—	—	±100	µA

PI74FCT162240T/162H240T Output Drive Characteristics (Over the Operating Range)

Parameters	Description	Test Conditions[1]		Min.	Typ[2]	Max.	Units
V_{OH}	Output HIGH Voltage	V_{CC} = Min., V_{IN} = V_{IH} or V_{IL}	I_{OH} = –24.0 mA	2.4	3.3		V
V_{OL}	Output LOW Voltage	V_{CC} = Min., V_{IN} = V_{IH} or V_{IL}	I_{OL} = 24 mA		0.3	0.55	V
I_{ODL}	Output LOW Current	V_{CC} = 5V, V_{IN} = V_{IH} OR V_{IL}, V_{OUT} = 1.5V[3]		60	115	150	mA
I_{ODH}	Output HIGH Current	V_{CC} = 5V, V_{IN} = V_{IH} OR V_{IL}, V_{OUT} = 1.5V[3]		–60	–115	–150	mA

Capacitance (T_A = 25°C, f = 1 MHz)

Parameters[4]	Description	Test Conditions	Typ	Max.	Units
C_{IN}	Input Capacitance	V_{IN} = 0V	4.5	6	pF
C_{OUT}	Output Capacitance	V_{OUT} = 0V	5.5	8	pF

Notes:
1. For Max. or Min. conditions, use appropriate value specified under Electrical Characteristics for the applicable device type.
2. Typical values are at Vcc = 5.0V, +25°C ambient and maximum loading.
3. Not more than one output should be shorted at one time. Duration of the test should not exceed one second.
4. This parameter is determined by device characterization but is not production tested.

Power Supply Characteristics

Parameters	Description	Test Conditions[1]		Min.	Typ[2]	Max.	Units
I_{CC}	Quiescent Power Supply Current	V_{CC} = Max.	V_{IN} = GND or V_{CC}		0.1	500	µA
ΔI_{CC}	Supply Current per Input @ TTL HIGH	V_{CC} = Max.	V_{IN} = 3.4 V[3]		0.5	1.5	mA
I_{CCD}	Supply Current per Input per MHz[4]	V_{CC} = Max., Outputs Open x$\overline{OE}$ = GND One Bit Toggling 50% Duty Cycle	V_{IN} = V_{CC} V_{IN} = GND		60	100	µA/ MHz
I_C	Total Power Supply Current[6]	V_{CC} = Max., Outputs Open f_i = 10 MHz 50% Duty Cycle x$\overline{OE}$ = GND	V_{IN} = V_{CC} V_{IN} = GND		0.6	1.5[5]	mA
		One Bit Toggling	V_{IN} = 3.4 V V_{IN} = GND		0.9	2.3[5]	
		V_{CC} = Max., Outputs Open f_i = 2.5 MHz 50% Duty Cycle x$\overline{OE}$ = GND	V_{IN} = V_{CC} V_{IN} = GND		2.4	4.5[5]	
		16 Bits Toggling	V_{IN} = 3.4 V V_{IN} = GND		6.4	16.5[5]	

Notes:
1. For Max. or Min. conditions, use appropriate value specified under Electrical Characteristics for the applicable device.
2. Typical values are at Vcc = 5.0 V, +25°C ambient.
3. Per TTL driven input (V_{IN} = 3.4 V); all other inputs at Vcc or GND.
4. This parameter is not directly testable, but is derived for use in Total Power Supply Calculations.
5. Values for these conditions are examples of the Icc formula. These limits are guaranteed but not tested.
6. $I_C = I_{QUIESCENT} + I_{INPUTS} + I_{DYNAMIC}$
   $I_C = I_{CC} + \Delta I_{CC} D_H N_T + I_{CCD} (f_{CP}/2 + f_i N_i)$
   I_{CC} = Quiescent Current
   ΔI_{CC} = Power Supply Current for a TTL High Input (V_{IN} = 3.4 V)
   D_H = Duty Cycle for TTL Inputs High
   N_T = Number of TTL Inputs at D_H
   I_{CCD} = Dynamic Current Caused by an Input Transition Pair (HLH or LHL)
   f_{CP} = Clock Frequency for Register Devices (Zero for Non-Register Devices)
   f_i = Input Frequency
   N_i = Number of Inputs at f_i
   All currents are in milliamps and all frequencies are in megahertz.

PI74FCT16240T Switching Characteristics over Operating Range

Parameters	Description	Conditions[1]	16240T Com. Min	16240T Com. Max	16240AT Com. Min	16240AT Com. Max	16240CT Com. Min	16240CT Com. Max	16240DT Com. Min	16240DT Com. Max	16240ET Com. Min	16240ET Com. Max	Unit
t_{PLH} t_{PHL}	Propagation Delay xAx to x$\overline{Y}$x	C_L = 50 pF R_L = 500Ω	1.5	8.0	1.5	4.8	1.5	4.3	1.5	3.6	1.5	3.2	ns
t_{PZH} t_{PZL}	Output Enable Time x$\overline{OE}$ to xAx or xY$\overline{x}$		1.5	10.0	1.5	6.2	1.5	5.8	1.5	4.8	1.5	4.4	ns
t_{PHZ} t_{PLZ}	Output Disable Time[3] x$\overline{OE}$ to xAx or xY$\overline{x}$		1.5	9.5	1.5	5.6	1.5	5.2	1.5	4.0	1.5	4.0	ns
$t_{SK(o)}$	Output Skew[4]		—	0.5	—	0.5	—	0.5	—	0.5	—	0.5	ns

PI74FCT162240T Switching Characteristics over Operating Range

Parameters	Description	Conditions[1]	162240T Com. Min	162240T Com. Max	162240AT Com. Min	162240AT Com. Max	162240CT Com. Min	162240CT Com. Max	162240DT Com. Min	162240DT Com. Max	162240ET Com. Min	162240ET Com. Max	Unit
t_{PLH} t_{PHL}	Propagation Delay xAx to x$\overline{Y}$x	C_L = 50 pF R_L = 500Ω	1.5	8.0	1.5	4.8	1.5	4.3	1.5	3.6	1.5	3.2	ns
t_{PZH} t_{PZL}	Output Enable Time x$\overline{OE}$ to xAx or xY$\overline{x}$		1.5	10.0	1.5	6.2	1.5	5.8	1.5	4.8	1.5	4.4	ns
t_{PHZ} t_{PLZ}	Output Disable Time[3] x$\overline{OE}$ to xAx or xY$\overline{x}$		1.5	9.5	1.5	5.6	1.5	5.2	1.5	4.0	1.5	4.0	ns
$t_{SK(o)}$	Output Skew[4]		—	0.5	—	0.5	—	0.5	—	0.5	—	0.5	ns

PI74FCT162H240T Switching Characteristics over Operating Range

Parameters	Description	Conditions[1]	162H240T Com. Min	162H240T Com. Max	162H240AT Com. Min	162H240AT Com. Max	162H240CT Com. Min	162H240CT Com. Max	162H240DT Com. Min	162H240DT Com. Max	162H240ET Com. Min	162H240ET Com. Max	Unit
t_{PLH} t_{PHL}	Propagation Delay xAx to x$\overline{Y}$x	C_L = 50 pF R_L = 500Ω	1.5	8.0	1.5	4.8	1.5	4.3	1.5	3.6	1.5	3.2	ns
t_{PZH} t_{PZL}	Output Enable Time x$\overline{OE}$ to xAx or xY$\overline{x}$		1.5	10.0	1.5	6.2	1.5	5.8	1.5	4.8	1.5	4.4	ns
t_{PHZ} t_{PLZ}	Output Disable Time[3] x$\overline{OE}$ to xAx or xY$\overline{x}$		1.5	9.5	1.5	5.6	1.5	5.2	1.5	4.0	1.5	4.0	ns
$t_{SK(o)}$	Output Skew[4]		—	0.5	—	0.5	—	0.5	—	0.5	—	0.5	ns

Notes:
1. See test circuit and wave forms.
2. Minimum limits are guaranteed but not tested on Propagation Delays.
3. This parameter is guaranteed but not production tested.
4. Skew between any two outputs, of the same package, switch in the same direction. This parameter is guaranteed by design.