PI6C557-03

PCI Express Clock

Product Features

- LVDS compatible outputs
- Supply voltage of 3.3V ±10%
- 25MHz input frequency
- HCSL outputs, 0.7V Current mode differential pair
- Jitter 60ps cycle-to-cycle (typ)
- Spread of ±0.25%, -0.5%, -0.75%, and no spread
- Industrial temperature range
- Packaging: (Pb-free and Green)
  - 16-pin, 173 mils wide TSSOP

Description

The PI6C557-03 is a spread spectrum clock generator supporting PCI Express and Ethernet requirements. The device is used for PC or embedded systems to substantially reduce Electromagnetic Interference (EMI).

The PI6C557-03 provides two differential (HCSL) spread spectrum outputs. The PI6C557-03 is configured to select spread and clock selection. Using Pericom's patented Phase-Locked Loop (PLL) techniques, the device takes a 25MHz crystal input and produces two pairs of differential outputs (HCSL) at 25MHz, 100MHz, 125MHz and 200MHz clock frequencies. It also provides spread selection of ±0.25%, -0.5%, -0.75%, and no spread.

Block Diagram

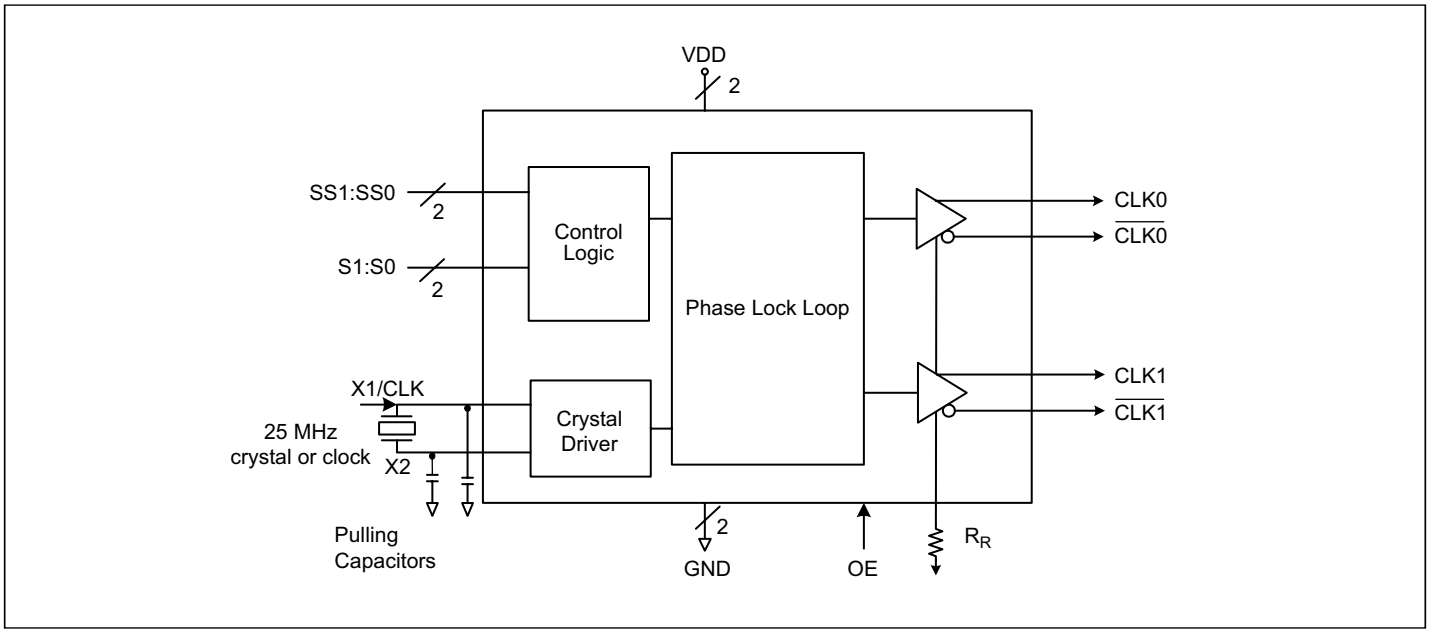

Pin Configuration

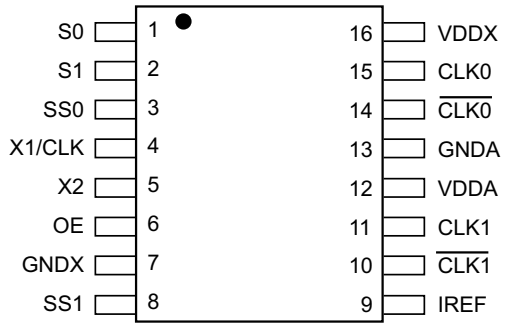

Pin Description

Pin #	Pin Name	I/O Type	Description
1	S0	Input	Select pin 0 (Internal pull-up resistor). See Table 1.
2	S1	Input	Select pin 1 (Internal pull-up resistor). See Table 1.
3	SS0	Input	Spread Select pin 0 (Internal pull-up resistor). See Table 2.
4	X1/CLK	Input	Crystal or clock input. Connect to a 25MHz crystal or single ended clock.
5	X2	Output	Crystal connection. Leave unconnected for clock input.
6	OE	Input	Output enable. Internal pull-up resistor.
7	GNDX	Power	Crystal ground pin.
8	SS1	Input	Spread Select pin 1 (Internal pull-up resistor). See Table 2.
9	IREF	Output	Precision resistor attached to this pin is connected to the internal current reference.
10	$\overline{\text{CLK1}}$	Output	HCSL compliment clock output
11	CLK1	Output	HCSL clock output
12	VDDA	Power	Connect to a +3.3V source.
13	GNDA	Power	Output and analog circuit ground.
14	$\overline{\text{CLK0}}$	Output	HCSL compliment clock output
15	CLK0	Output	HCSL clock output
16	VDDX	Power	Connect to a +3.3V source.

Table 1: Output Select Table

S1	S0	CLK(MHz)
0	0	25
0	1	100
1	0	125
1	1	200

Table 2: Spread Selection Table

SS1	SS0	Spread
0	0	Center ±0.25
0	1	Down -0.5
1	0	Down -0.75
1	1	No Spread

Application Information

Decoupling Capacitors
Decoupling capacitors of 0.01µF should be connected between each V_{DD} pin and the ground plane and placed as close to the V_{DD} pin as possible.

Crystal
Use a 25MHz fundamental mode parallel resonant crystal with less than 300PPM of error across temperature.

Crystal Capacitors
C_L = Crystals's load capacitance in pF

Crystal Capacitors (pF) = (C_L - 8) *2

For example, for a crystal with 16pF load caps, the external effective crystal cap would be 16 pF. (16-8)*2=16.

Current Source (Iref) Reference Resistor - R_R
If board target trace impedance is 50Ω,
then R_R = 475Ω providing an IREF of 2.32 mA. The output current (I_{OH}) is 6*IREF.

Output Termination
The PCI Express differential clock outputs of the PI6C557-03 are open source drivers and require an external series resistor and a resistor to ground. These resistor values and their allowable locations are shown in detail in the PCI Express Layout Guidelines section.

The PI6C557-03 can be configured for LVDS compatible voltage levels. See the LVDS Compatible Layout Guidelines section.

Output Structures

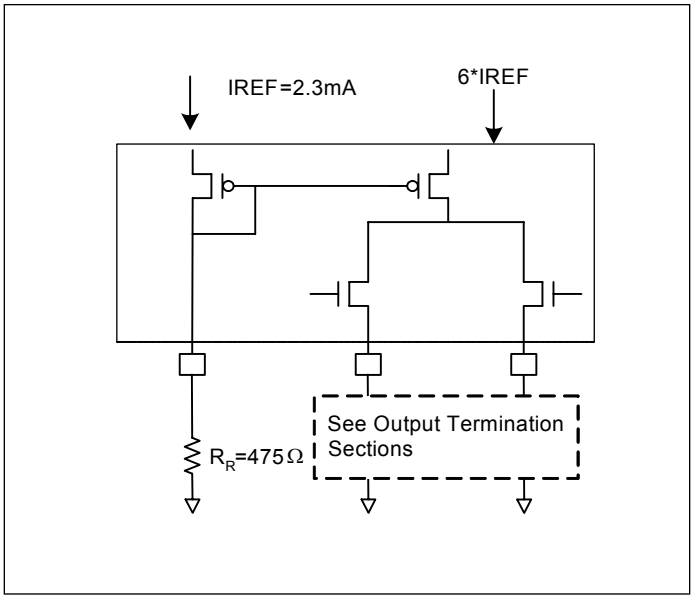

PCI Express Layout Guidelines

Common Recommendations for Differential Routing	Dimension or Value	Unit
L1 length, route as non-coupled 50Ω trace.	0.5 max	inch
L2 length, route as non-coupled 50Ω trace.	0.2 max	inch
L3 length, route as non-coupled 50Ω trace.	0.2 max	inch
R_S	33	Ω
R_T	49.9	Ω

Differential Routing on a Single PCB	Dimension or Value	Unit
L4 length, route as coupled microstrip 100Ω differential trace.	2 min to 16 max	inch
L4 length, route as coupled stripline 100Ω differential trace.	1.8 min to 14.4 max	inch

Differential Routing to a PCI Express connector	Dimension or Value	Unit
L4 length, route as coupled microstrip 100Ω differential trace.	0.25 min to 14 max	inch
L4 length, route as coupled stripline 100Ω differential trace.	0.225 min to 12.6 max	inch

PCI Express Device Routing

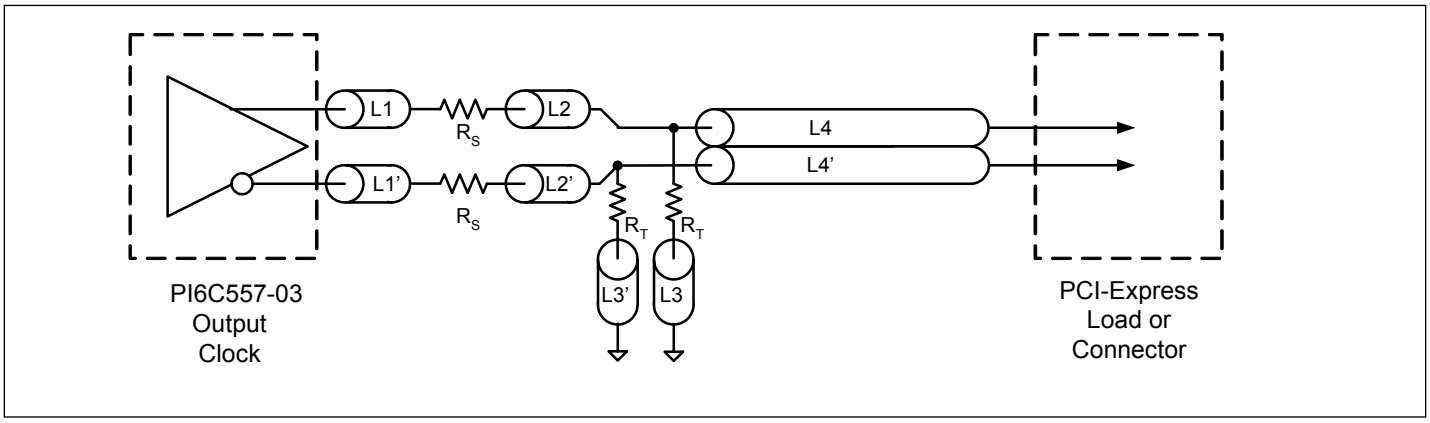

Typical PCI Express (HCSL) Waveform

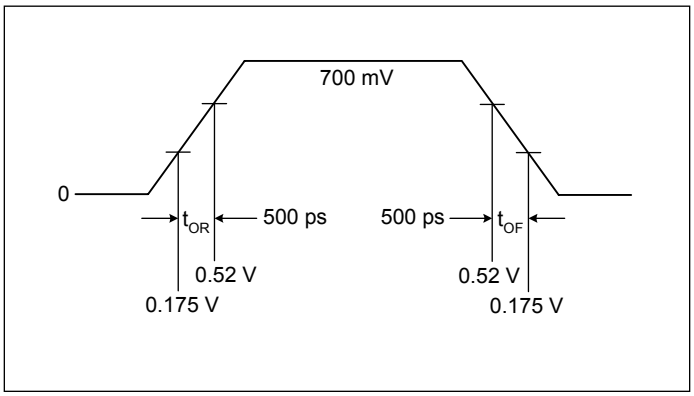

Application Information

LVDS Recommendations for Differential Routing	Dimension or Value	Unit
L1 length, route as non-coupled 50Ω trace.	0.5 max	inch
L2 length, route as non-coupled 50Ω trace.	0.2 max	inch
R_P	100	Ω
R_Q	100	Ω
R_T	150	Ω
L3 length, route as 100Ω differential trace.		
L3 length, route as 100Ω differential trace.		

LVDS Device Routing

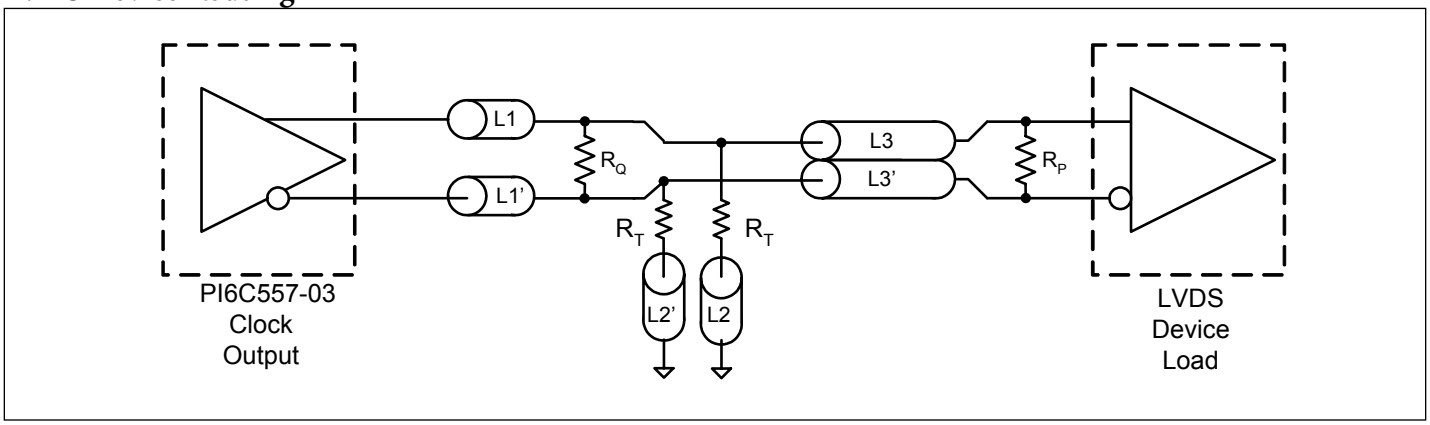

Typical LVDS Waveform

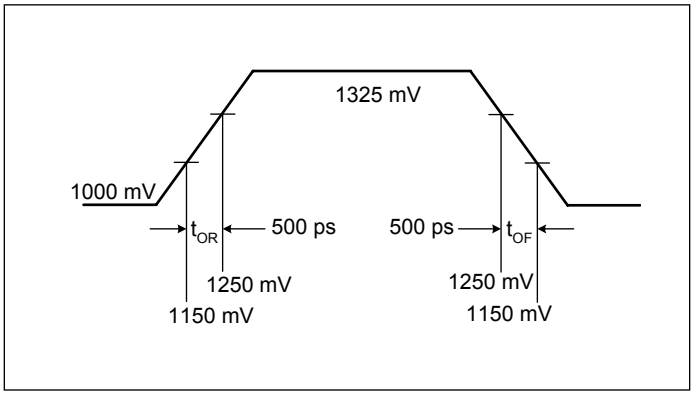

Electrical Specifications

Maximum Ratings

Supply Voltage to Ground Potential.....5.5V
All Inputs and Outputs ..... -0.5V to V_{DD}+0.5V
Ambient Operating Temperature.....-40 to +85°C
Storage Temperature.....-65 to +150°C
Junction Temperature ..... 150°C
Soldering Temperature ..... 260°C

Note:

Stresses greater than those listed under MAXIMUM RATINGS may cause permanent damage to the device. This is a stress rating only and functional operation of the device at these or any other conditions above those indicated in the operational sections of this specification is not implied. Exposure to absolute maximum rating conditions for extended periods may affect reliability.

Recommended Operation Conditions

Parameter	Min.	Typ.	Max.	Unit
Ambient Operating Temperature	-40		+85	°C
Power Supply Voltage (measured in respect to GND)	+3.0		+3.6	V

DC Characteristics (V_{DD} = 3.3V ±10%, T_A = -40°C to +85°C)

Symbol	Parameter	Conditions		Min.	Typ.	Max.	Unit
V_{DD}	Supply Voltage			3.0	3.3	3.60	V
V_{IH}	Input High Voltage(1)	S0, S1, OE, CLK, SS0, SS1		2.0		V_{DD} +0.3	V
V_{IL}	Input Low Voltage(1)	S0, S1, OE, CLK, SS0, SS1		GND -0.3		0.8	V
I_{IL}	Input Leakage Current	0 < Vin < VDD	With input pull-up and pull-downs	-20		20	µA
			Without input pull-up and pull-downs	-5		5	
I_{DD}	Operating Supply Current	R_L = 50Ω, C_L = 2pF				65	mA
I_{DDOE}		OE = LOW				35	mA
C_{IN}	Input Capacitance	Input pin capacitance				7	pF
C_{OUT}	Output Capacitance	Output pin capacitance				6	pF
L_{PIN}	Pin Inductance					5	nH
R_{OUT}	Output Resistance	CLK Outputs		3.0			kΩ

Notes:

1. Single edge is monotonic when transitioning through region.

AC Characteristics (V_{DD} = 3.3V ±10%, T_A = -40°C to +85°C)

Symbol	Parameter	Conditions	Min.	Typ.	Max.	Unit
F_{IN}	Input Frequency			25		MHz
V_{OUT}	Output Frequency		25		200	MHz
V_{OH}	Output High Voltage (1,2)	@V_{DD} = 3.3V	660	700	850	mV
V_{OL}	Output Low Voltage(1,2)		-150	0		mV
V_{CPA}	Crossing Point Voltage(1,2)	Absolute	250	350	550	mV
V_{CN}	Crossing Point Voltage(1,2,4)	Variation over all edges			140	mV
J_{CC}	Jitter, Cycle-to-Cycle(1,3)			60	100	ps
MF	Modulation Frequency	Spread Spectrum	30	31.5	33	kHz
t_{OR}	Rise Time(1,2)	From 0.175V to 0.525V	175	332	700	ps
t_{OF}	Fall Time(1,2)	From 0.525V to 0.175V	175	344	700	ps
$\Delta T_R/\Delta T$	Rise/Fall Time Variation(1,2)				125	ps
T_{SKEW}	Skew between outputs	$V_{DD}/2$			50	ps
$T_{DUTY-CYCLE}$	Duty Cycle(1,3)		45		55	%
T_{OE}	Output Enable Time(5)	All outputs		0.1		µs
T_{OT}	Output Disable Time(5)	All outputs		0.1		µs
t_{STABLE}	From power-up to VDD=3.3V		1.6	3.0		ms
t_{SPREAD}	Setting period after spread change			3.0		ms

Notes:

1. RL = 50Ω with CL = 2 pF and RR = 475Ω

2. Single-ended waveform

3. Differential waveform

4. Measured at the crossing point

5. CLK pins are tri-stated when OE is LOW

Thermal Characteristics

Symbol	Parameter	Conditions	Min.	Typ.	Max.	Unit
θ_{JA}	Thermal Resistance Junction to Ambient	Still air			90	°C/W
θ_{JC}	Thermal Resistance Junction to Case				24	°C/W

Recomended Crystal Specification

Pericom recommends:
a) GC2500003 XTAL 49S/SMD(4.0 mm), 25M, CL=18pF, +/-30ppm
http://www.pericom.com/pdf/datasheets/se/GC_GF.pdf
b) FY2500081, SMD 5x3.2(4P), 25M, CL=18pF, +/-30ppm
http://www.pericom.com/pdf/datasheets/se/FY_F9.pdf
c) FL2500047, SMD 3.2x2.5(4P), 25M, CL=18pF, +/-20ppm
http://www.pericom.com/pdf/datasheets/se/FL.pdf

Packaging Mechanical: 20-contact TQFN (ZD)

DOCUMENT CONTROL NO.
PD - 1310

REVISION: E
DATE: 03/09/05

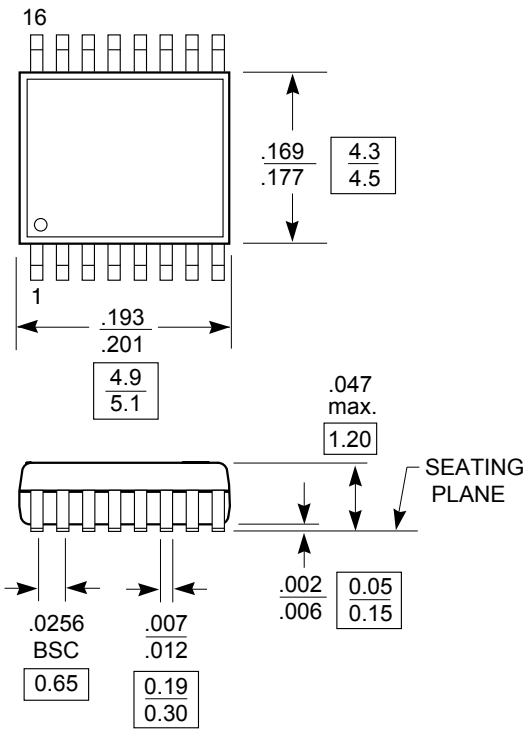

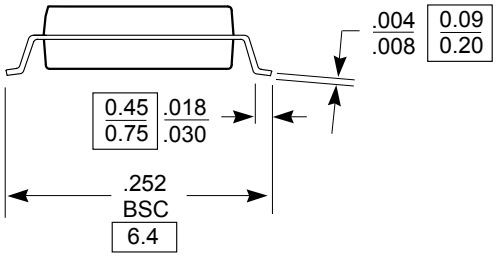

Note:
1. Package Outline Exclusive of Mold Flash and Metal Burr
2. Controlling dimentions in millimeters
3. Ref: JEDEC MO-153F/AB

PERICOM®
Pericom Semiconductor Corporation
3545 N. 1st Street, San Jose, CA 95134

DESCRIPTION: 16-Pin, 173-Mil Wide, TSSOP

PACKAGE CODE: L

Note: For latest package info, please check: http://www.pericom.com/products/packaging/mechanicals.php

Ordering Information[1-3]

Ordering Code	Package Code	PackageType
PI6C557-03LE	L	Pb-free & Green, 16-Pin TSSOP

Note:

1. Thermal characteristics and package top marking information can be found at http://www.pericom.com/packaging/

2. E = lead-free and green packaging

3. Adding an X suffix = tape/reel