SOTiny™ 2:1 Mux/DeMux Bus Switch

Features

- Near-Zero propagation delay
- 5Ω switches connect inputs to outputs
- Direct bus connection when switches are ON
- Ultra Low Quiescent Power (0.1µA Typical)
  – Ideally suited for notebook applications
- Packaging (Pb-free & Green available):
  – 6-pin plastic S0T-23 (T)

Description

Pericom Semiconductor's PI5C3303 is a single 2:1 Mux/DeMux digital switch designed with a fast enable. When enabled using the Bus Enable (BE) pin, the "A" or "B" pin is directly connected to the "C" pin. The bus switch introduces no additional propagation delay or additional ground bounce noise.

The PI5C3303 device has an active HIGH enable.

Block Diagram

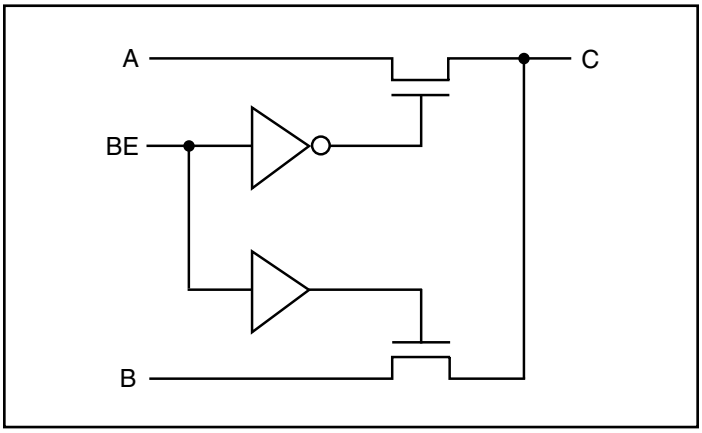

Pin Configuration

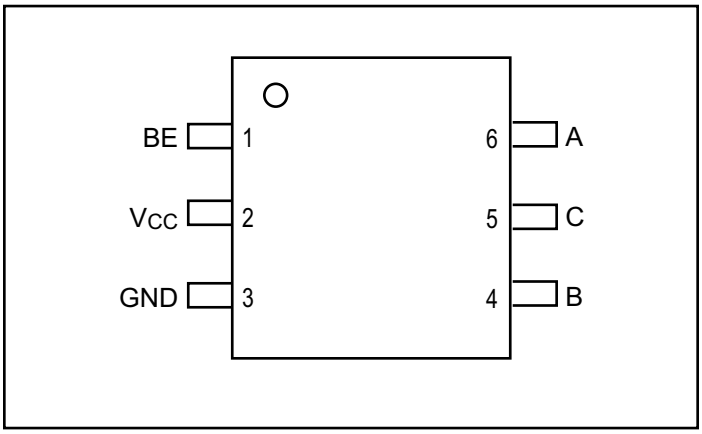

Truth Table(1)

BE	A	B	C	Function
L	C	X	A	Connect A & C
H	X	C	B	Connect B & C

Notes:

1. H = High Voltage Level
   L = Low Voltage Level
   X = Don't Care
2. A = I/O at pin 6
   B = I/O at pin 4
   C = I/O at pin 5

Pin Description

Pin Name	Description
BE	Switch Enable
A	Bus A at pin 6
B	Bus B at pin 4
C	Bus C at pin 5
V_{CC}	Power
GND	Ground

Maximum Ratings

(Above which the useful life may be impaired. For user guidelines, not tested.)

Storage Temperature	–65°C to +150°C
Ambient Temperature with Power Applied	–40°C to +85°C
Supply Voltage to Ground Potential	–0.5V to +7.0V
DC Input Voltage	–0.5V to +7.0V
DC Output Current	120mA
Power Dissipation	0.5W

Note: Stresses greater than those listed under MAXIMUM RATINGS may cause permanent damage to the device. This is a stress rating only and functional operation of the device at these or any other conditions above those indicated in the operational sections of this specification is not implied. Exposure to absolute maximum rating conditions for extended periods may affect reliability.

DC Electrical Characteristics (Over the Operating Range, T_A = –40°C to +85°C, V_{CC} = 5V ± 10%)

Parameters	Description	Test Conditions[1]	Min.	Typ.[2]	Max.	Units
V_{IH}	Input HIGH Voltage	Guaranteed Logic HIGH Level	2.0			V
V_{IL}	Input LOW Voltage	Guaranteed Logic LOW Level	–0.5		0.8	
I_{IH}	Input HIGH Current	V_{CC} = Max., V_{IN} = V_{CC}			±1	µA
I_{IL}	Input LOW Current	V_{CC} = Max., V_{IN} = GND			±1	
I_{OZ}	High Impedence Output Current	V_{CC} = Max., V_{OUT} = 0V or V_{CC}			±1	
R_{ON}	Switch On-Resistance[3]	V_{CC} = 4V, V_{IN} = 2.4V, I_{ON} = -15mA		10	20	Ω
		V_{CC} = 4.5V, V_{IN} = 0V, I_{ON} = 30mA or 64mA		4	7	
		V_{CC} = 4.5V, V_{IN} = 2.4V, I_{ON} = -15mA		7	15	

Capacitance (T_A = 25°C, f = 1 MHz)

Parameters(4)	Description	Test Conditions	Type[4]	Units
C_{IN}	Input Capacitance	V_{IN} = 0V	3	pF
C_{OFF}	A/B Capacitance, Switch Off		5	
C_{ON}	A/B Capacitance, Switch On		12	

Notes:

1. For Max. or Min. conditions, use appropriate value specified under Electrical Characteristics for the applicable device type.
2. Typical values are at V_{CC} = 5.0V, T_A = 25°C ambient and maximum loading.
3. Measured by the voltage drop between A and B pin at indicated current through the switch. On-Resistance is determined by the lower of the voltages on the two (A, B) pins.
4. This parameter is determined by device characterization but is not production tested.

Power Supply Characteristics

Parameters	Description	Test Conditions[1]		Min.	Typ.[2]	Max.	Units
I_{CC}	Quiescent Power Supply Current	V_{CC} = Max.	V_{IN} = GND or V_{CC}		0.1	3.0	µA
ΔI_{CC}	Supply Current per Input @ TTL HIGH	V_{CC} = Max.	V_{IN} = 3.4V[3]			2.5	mA

Notes:
1. For Max. or Min. conditions, use appropriate value specified under Electrical Characteristics for the applicable device.
2. Typical values are at V_{CC} = 5.0V, +25°C ambient.
3. Per TTL driven input (V_{IN} = 3.4V, control inputs only); A and B pins do not contribute to I_{CC}.

Switching Characteristics over Operating Range

Parameters	Description	Test Conditions[3]	V_{CC} = 4.5V		V_{CC} = 4V		Units
			Min.	Max.	Min.	Max.	
t_{PLH} t_{PHL}	Propogation Delay[1, 2] A to B, B to A	C_L = 50pF R_L = 500Ω	—	0.25		0.25	ns
t_{PZH} t_{PZL}	Bus Enable Time		1.0	4.9		5.5	
t_{PHZ} t_{PLZ}	Bus Disable Time		1.0	4.2		4.5	

Notes:
1. This parameter is guaranteed but not tested on Propagation Delays.
2. The bus switch contributes no propagational delay other than the RC delay of the On-Resistance of the switch and the load capacitance. The time constant for the switch alone is of the order of 0.25ns for 50pF load. Since his time constant is much smaller than the rise/fall times of typical driving signals, it adds very little propagational delay to the system. Propagational delay of the bus switch when used in a system is determined by the driving circuit on the driving side of the switch and its interaction with the load on the driven side.
3. See test circuit and waveforms.

Test Circuit

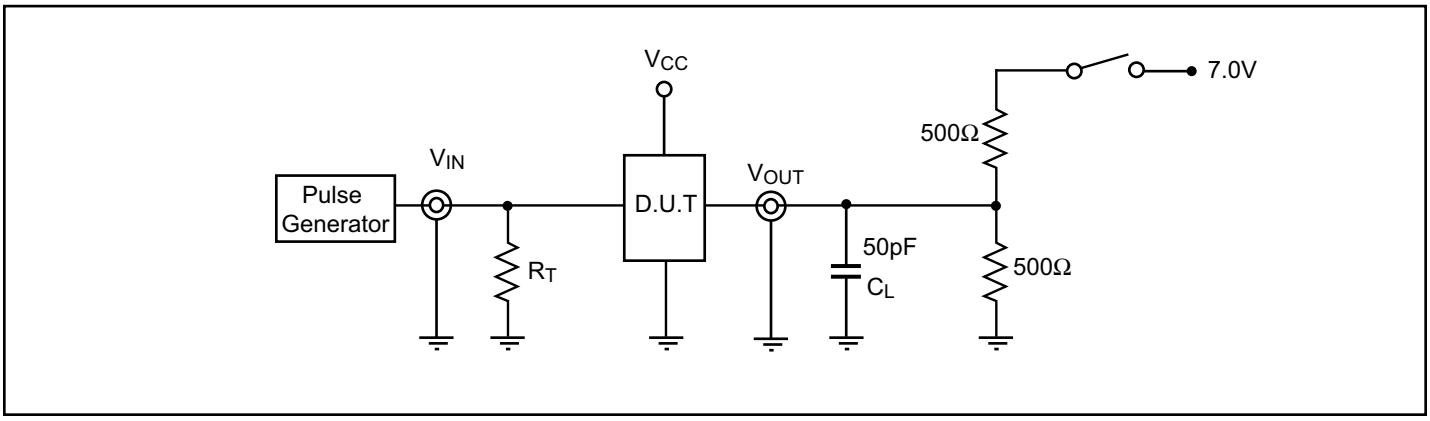

Switch Positions

Test	Switch
Open Drain Disable LOW Enable LOW	7V
All Other Inputs	Open

Notes:

1. C_L = Load Capacitance: inlcudes jig and proble capacitance.
   R_T = Termination Resistance: should be equal to the Z_{OUT} of the Pulse Generator.

Enable and Disable Timing

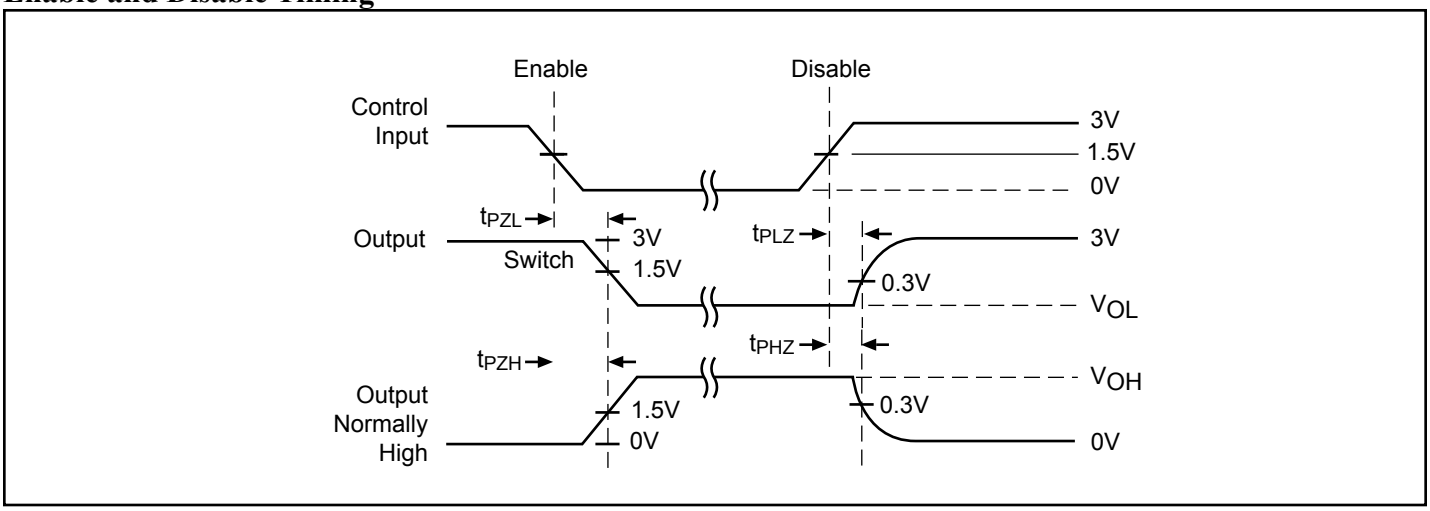

Notes:

1. Input Control Enable = Low; Input Control Disable = High.
2. Pulse Generator for All Pulses: Rate ≤ 1.0 MHz; $Z_{OUT} \leq 50\Omega$; t_F, t_R, ≤ 2.5ns,

Packaging Mechanical: 6-Pin Plastic SOT-23 (T)

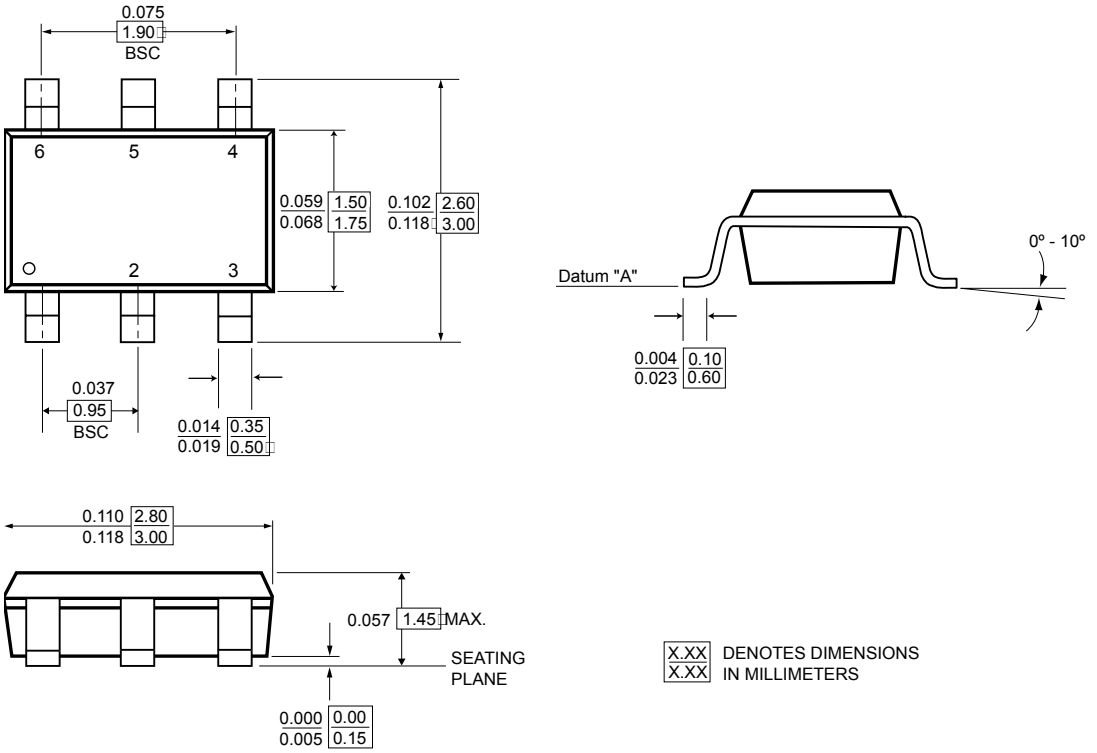

Ordering Information

Ordering Code	Package Code	Package Description	Top Mark
PI5C3303TX	T	6-Pin Plastic SOT-23	ZX
PI5C3303TEX	T	Pb-free & Green, 6-Pin Plastic SOT-23	ZX

Notes:
1. Thermal characteristics can be found on the company web site at www.pericom.com/packaging/
2. X = Tape and Reel