A Maxim Integrated Brand

PHY1090

10GbE Linear Transimpedance Amplifier

Features

- 1100nA$_{rms}$ maximum input referred noise
- Linear up to 2mA$_{pp}$ input level
- 2kΩ typical transimpedance
- Incorporates automatic gain control
- 3.3V power supply
- Integrated PIN filter capacitor & resistor
- OMA-based RSSI output current
- -40°C to +95°C operating range
- 1.169mm X 0.929mm die size

Applications

- EDC enabled receivers
- OC192 Telecom systems
- IEEE 10GBASE-LRM receiver systems

Description

The PHY1090 is a high linearity transimpedance amplifier designed to be used in fiber optic modules for EDC enabled 10Gbps applications. The PHY1090 is optimised for applications requiring low distortion and low input referred noise, such as 10GBASE-LRM. When combined with the PHY2060 EDC IC, the PHY1090 enables a complete EDC-enabled receive path, ideally suited to the 10GBASE-LRM IEEE standard.

The PHY1090 integrates a low noise transimpedance amplifier and an automatic gain control output stage to give a linear output over a wide dynamic range. It also integrates an RC filter in series with the photodiode cathode pads to reduce ROSA cost.

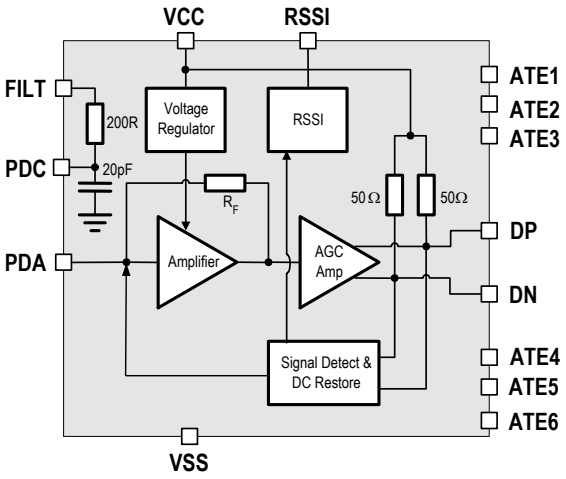

Figure 1: Block diagram

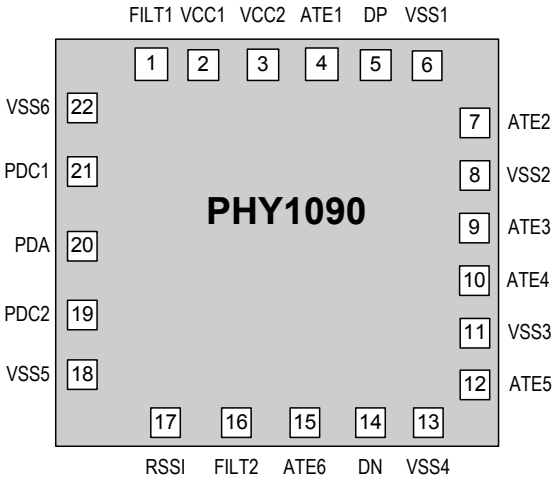

Figure 2: Pad Layout

1. Ordering Information

Part Number	Description
PHY1090DS-WR	PHY1090 bare die in waffle pack
PHY1090DS-FR	PHY1090 bare die on film

2. Pad Descriptions

Number	Name	Type	Description
1	FILT1	Analog	Series resistor to PDC, connected internally to FILT2
2	VCC1	PWR/GND	Power supply connection
3	VCC2	PWR/GND	Power supply connection
4	ATE1	Test pads	Probe test pad - Do not bond to these
5	DP	Analog	Serial data output+
6	VSS1	PWR/GND	Ground connection
7	ATE2	Test pads	Probe test pad - Do not bond to these
8	VSS2	PWR/GND	Ground connection
9	ATE3	Test pads	Probe test pad - Do not bond to these
10	ATE4	Test pads	Probe test pad - Do not bond to these
11	VSS3	PWR/GND	Ground connection
12	ATE5	Test pads	Probe test pad - Do not bond to these
13	VSS4	PWR/GND	Ground connection
14	DN	Analog	Serial data output
15	ATE6	Test pads	Probe test pad - Do not bond to these
16	FILT2	Analog	Series resistor to PDC, connected internally to FILT1
17	RSSI	Analog	Current proportional to OMA in dBm
18	VSS5	PWR/GND	Ground connection
19	PDC1	Analog	Photodiode cathode connected internally to PDC2
20	PDA	Analog	Photodiode anode
21	PDC2	Analog	Photodiode cathode connected internally to PDC1
22	VSS6	PWR/GND	Ground connection

3. Device Specifications

3.1 Absolute Maximum Ratings

Parameter	Conditions	Min	Typ	Max	Unit
Supply voltage		-0.5		6	V
Storage temperature		-55		+150	°C
PDA Input Current A.C.	ER = ∞			4.0	mApp
PDA Input Current D.C.				2.0	mA
Operating temperature	Measured on die			115	°C
Die attach temperature				400	°C

Please note that functional device operation at these ratings is not guaranteed, nor implied. Sustained stress at these ratings may affect device reliability.

3.2 ESD and Latch Up Ratings

Parameter	Conditions	Min	Typ	Max	Unit
ESD – All pins except PDA	JEDEC JESD-A114 (HBM) Class 1c	2			kV
ESD – PDA pin	JEDEC JESD-A114 (HBM) Class 1c	1			kV

The device is not guaranteed to meet parametric specifications. Permanent damage may be incurred by operating beyond these limits.

3.3 Operating Conditions

Parameter	Conditions	Min	Typ	Max	Unit
Supply voltage		2.95	3.3	3.65	V
Operating temperature	Measured on back side of die	-40		+95	°C

3.4 Parametric Performance

Parametric performance is guaranteed over the specified Operating Conditions.

DC Specifications

Parameter	Conditions	Min	Typ	Max	Unit
Supply current	Vcc = 3.3V		45	68	mA
Power supply rejection ratio	(VDP - VDN) / ΔVcc at 2MHz; no Vcc decoupling	6			dB
	(VDP - VDN) / ΔVcc at 5MHz; no Vcc decoupling	14			dB
Input bias voltage	PDA voltage; wrt Vss			1	V
Transimpedance	At 10MHz; Input current =40uApp	1600	2000	2700	Ω
Photodiode filter resistor		160	200	300	Ω
Output resistance	Differential	80	100	120	Ω

AC Specifications

Parameter	Condition	Min	Typ	Max	Unit
-3dB Bandwidth[1]	Over input current range: 150uApp - 1mApp, 100Ω differential output load	5	6		GHz
Input current[1]				2	mApp
Input referred noise[1]	Measured using 7.5GHz 4th order Bessel filter; Input current ≤ 150μApp			1100	nArms
Differential output swing[1]	Input current ≥ 150μApp, 10.3Gbps data filtered by 2.25GHz, 4th order Bessel-Thomson filter	240	300	360	mVpp
Differential output swing[1]	Input current ≥ 150μApp - 10.3Gbps back-to-back		200		mVpp
Low frequency cut-off	23uApp			15	kHz
Output return loss, differential	< 5GHz	8	20		dB
Output return loss, single ended	< 5GHz	8	20		dB
Total Harmonic Distortion (THD)	0.1GHz sinusoidal input; ER = 6.5dB; current 100μA pp - 600μA pp			2	%
Total Harmonic Distortion (THD)	0.1GHz sinusoidal input; ER = 6.5dB; current = 0.75 - 2mApp			6.5	%
Gain flatness[1]	100MHz - 5GHz; flatness referred to 100MHz; Input current ≤ 150μApp			±1.5	dB
Deterministic jitter[1]	2^7-1 PRBS; input current 2mApp, 5dB extinction ratio		50	100	mUIpp
AGC settling time	Within 10% of final value			40	μs
RSSI Accuracy	AC input current 150μA to 500μA			30	%
RSSI response time				40	ms

Notes:

1 Using the circuit below for PD and bonding parameters (Figure 3) :

C_{PD} = 0.3pF	R_{PD} = 15Ω;	- PD parasitics
L_{PD_IN} = 0.5nH	R_{PD_IN} = 500mΩ;	- PDA bond wire parasitics
$L_{OUT_DP/DN}$ = 0.5nH	$R_{OUT_DP/DN}$ = 250mΩ	- DP/DN bond wire parasitics
L_{FILTER} = 0.5nH	R_{FILTER} = 250mΩ;	- FILT bond wire parasitics
L_{VCC} = 0.3nH	R_{VCC} = 300mΩ;	- Combined Vcc bond wire parasitics
L_{VSS} = 0.1nH	R_{VSS} = 100mΩ	- Combined Vss bond wire parasitics

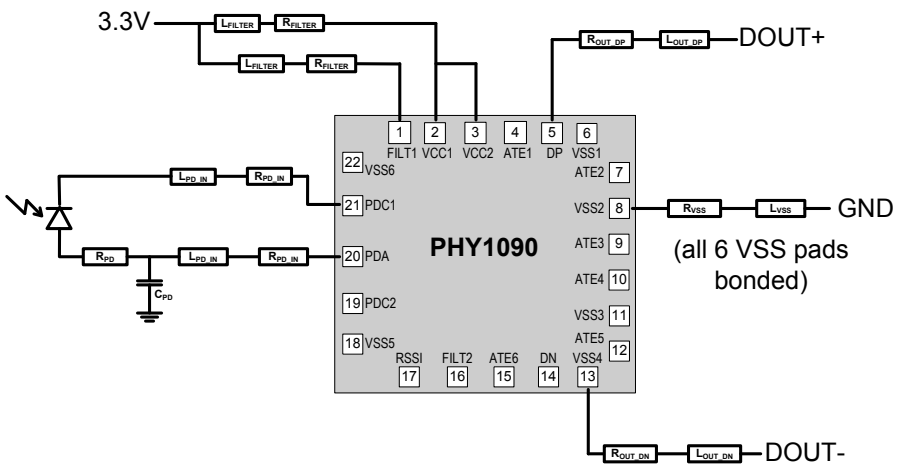

Figure 3: Photodiode and bonding parameters

4. Device Description

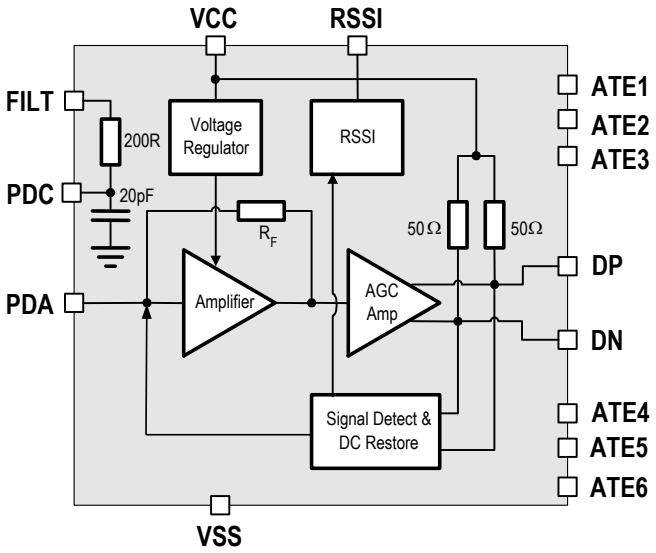

Figure 4: PHY1090 TIA block diagram

The PHY1090 is a Transimpedance Amplifier (TIA) designed for 10GBASE-LRM applications. It provides typical measured average power sensitivity for a ROSA featuring the PHY1090 of better than -18.5dBm at 10.3125Gbps. This is based upon a back-to-back link and under the conditions specified in Notes 1 and 2 of the Parametric Performance section. Since sensitivity is strongly dependant upon both the photo detector's capacitance and responsivity and individual ROSA design and bonding, this typical measured sensitivity is for illustrative purposes only.

4.1 Photodiode Cathode Supply

The photodiode (PD) cathode power supply is connected externally. A 20pF capacitor and 200Ω resistor are integrated into the PHY1090 to reduce cost of the ROSA, though additional decoupling within the ROSA may still be used.

The pad layout of the PHY1090 has been optimized for direct connection of the PD cathode (via the FILT pin) to Vcc. Alternatively, the pad layout also enables a PD cathode connection to a supply voltage external to the ROSA.

4.2 Transimpedance & AGC Stages

The transimpedance (current to voltage) amplifier (TIA) stage is a very low noise amplifier with a feedback resistor to set the gain. An internal voltage regulator with integrated stability components is used to power the front-end TIA in order to improve the rejection of power supply noise.

The AGC stage features automatic gain control, whereby the gain is adjusted to maintain a fixed output swing. This allows the output gain to remain linear over a wide range of input signal levels.

The PHY1090 AGC gain control is a function of the peak input signal amplitude, not average input signal and has been optimized for dispersed input data.

For the purposes of test evaluation, the effect of dispersion has been emulated in the electrical domain by filtering the input data to the PHY1090 using a 4th order Bessel-Thompson filter having a 2.25GHz bandwidth. This ensures sufficient eye closure to emulate the effects of dispersion, and hence ensure correct operation of the PHY1090 AGC. In this case, 300mVpp differential typical output swing will result. If a back-to-back test is performed without any filtering or dispersion, the measured output swing is typically 200mVppd.

The TIA output features a differential supply referenced voltage amplifier, and has 50Ω single ended output impedance. For optimum supply-noise rejection, the PHY1090 should be terminated differentially.

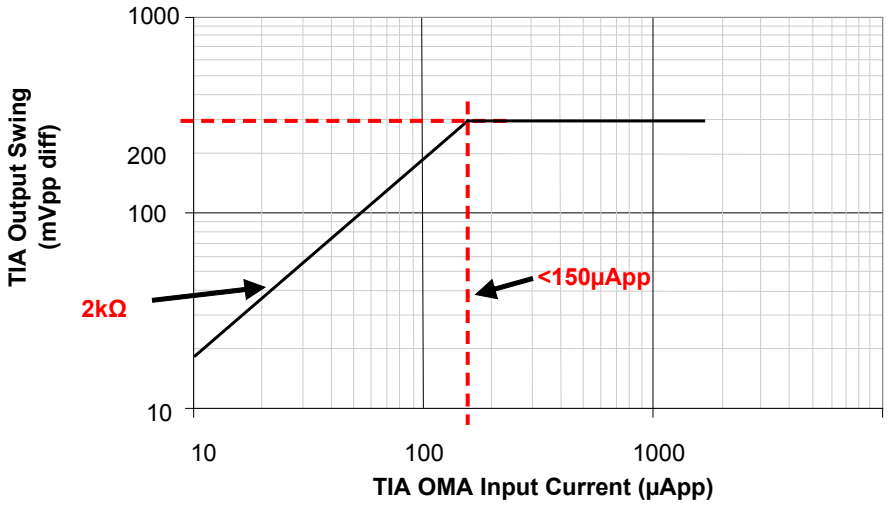

Figure 5: PHY1090 output voltage characteristic (filtered data)

4.3 DC Restore

The direct-current cancellation uses low frequency feedback to remove the DC component of the input signal. This has the effect of minimizing pulse-width distortions for signals with a 50% mark density. The DC cancellation circuit is internally compensated, and does not require any additional external capacitors.

4.4 RSSI

The PHY1090 RSSI output is designed to produce an OMA-based power indication *proportional* to input OMA. This can be used to generate a Loss of Signal indicator when used with a threshold detector as provided in the PHY2060 EDC enabled 10Gbps receiver.

The RSSI detector has been designed to be most accurate from 150µApp to 500µA, to allow the detection of a valid 10GBASE-LRM signal. In this range the output RSSI current is equal to 3X the input current.

The RSSI output is referenced to V_{cc}. When used in conjunction with Phyworks' PHY2060EDC IC, it is recommended that the RSSI current is connected to a ground (V_{ss}) referenced 1kΩ resistor to generate a voltage indication that increases with increasing input OMA.

5. Typical Application Information

5.1 Bonding and Layout

In order to achieve optimal ROSA performance, it is necessary to minimise noise pickup and the effects of parasitic components related to the TIA bond-out. To this end, it is recommended that:

- All bond wire lengths should be kept to a minimum, especially supply and ground wires, to minimize inductive effects.
- Bond wires carrying high speed signals be kept orthogonal to supply and ground bond wires to minimize performance degradation through pick-up.
- The positive supply inside the ROSA should be decoupled with a good quality capacitor.
- If external PD bias is implemented, the PD bias pin should be decoupled inside the ROSA with a good quality capacitor.
- The PD capacitance should not exceed 0.3pF to minimize degradation of bandwidth and noise.
- Bond ball should be centred and within the bond pad opening and should not occupy more than 75% of the bond pad area
- Bond pressure of 20-25g is recommended, with a maximum ultrasonic power of 70mW for 20ms

Figures 6 and 7 depict suggested bond-outs.

Note**:** Whilst the PHY1090 AC performance has been characterized for the bonding and PD parasitics stated in Note 2 of the Parametric Performance section, improvements in ROSA electrical bandwidth *may* be obtained by 'tuning' the bond wire length between the PD anode pad and TIA PDA pad. However, this may also adversely affect jitter and gain flatness performance.

5.2 MSA Compatibility

Figure 8 shows the PHY1090's compatibility with the XMD ROSA specification. Note that pin 6 of the ROSA flex can be the RSSI output from the PHY1090, or the photodiode bias voltage in the case of external bias configuration.

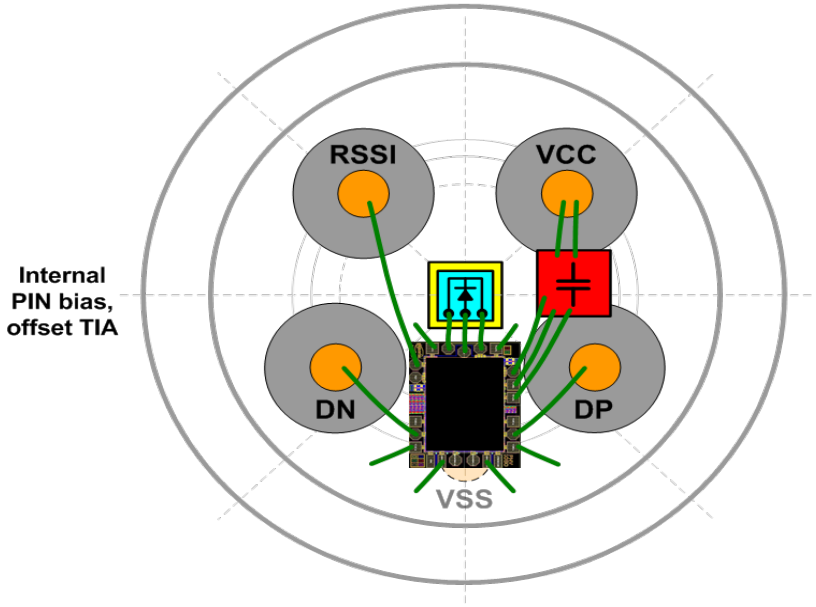

Figure 6: Example 5-pin TO-46 bond-out – internal PD bias
*(*Top-view: looking into the header**)**

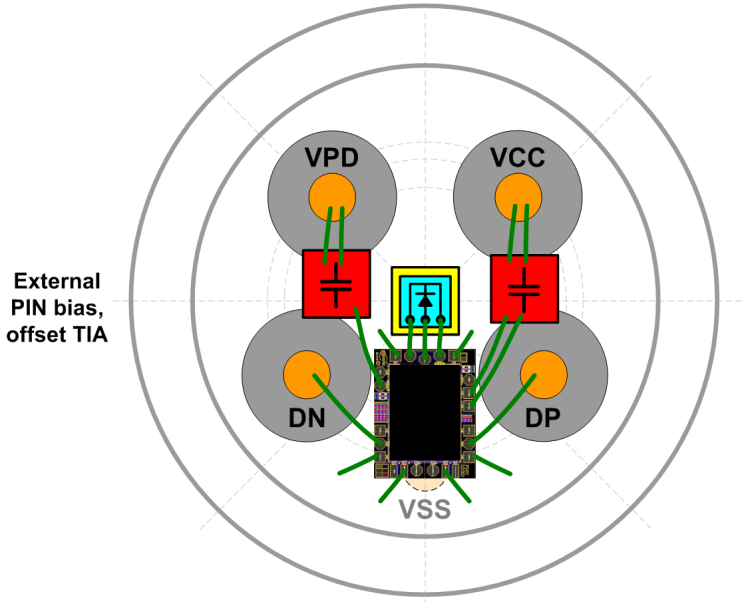

Figure 7: Example 5-pin TO-46 bond-out – external PD bias
(Top-view: looking into the header)

Suggested Vcc decoupling capacitor value:	≥470pF
Suggested Vpd decoupling capacitor value:	≥200pF

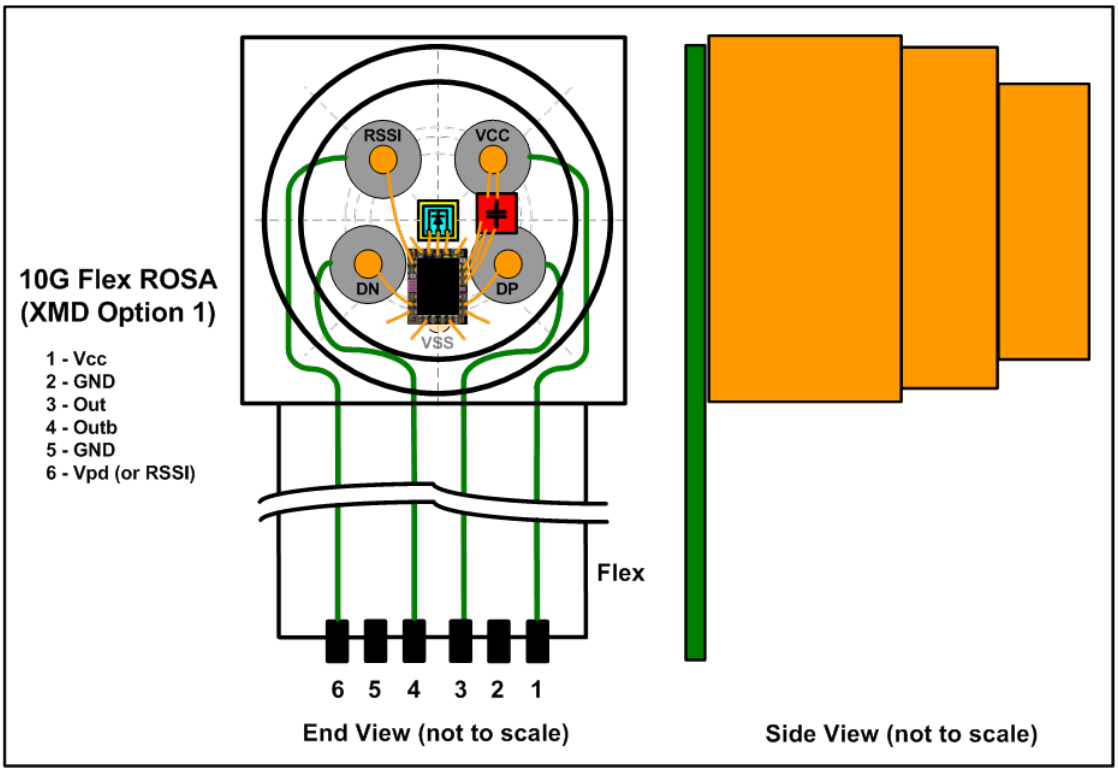

Figure 8: Example Flex-based ROSA

6. Die image, Pad Positions and Sizes

Die size: 1.169mm x 0.929mm

Thickness: 290µm +/-10µm

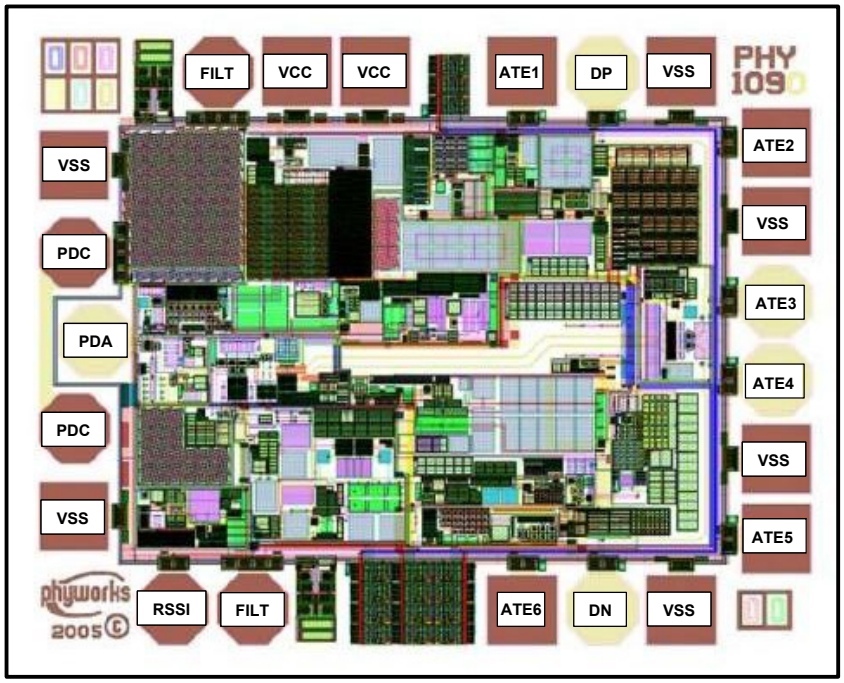

Pin Number	Pin Name		X (µm)	Y (µm)
1	FILT1	80µm x 80µm, octagonal	-258.9	339.5
2	VCC1	80µm x 80µm, rectangular	-159.5	339.5
3	VCC2	80µm x 80µm, rectangular	-61.5	339.5
4	ATE1	80µm x 80µm, rectangular	122.5	339.5
5	DP	80µm x 80µm, octagonal	222	339.5
6	VSS1	80µm x 80µm, rectangular	321.5	339.5
7	ATE2	80µm x 80µm, rectangular	439.5	250
8	VSS2	80µm x 80µm, octagonal	439.5	150
9	ATE3	80µm x 80µm, octagonal	439.5	47.5
10	ATE4	80µm x 80µm, octagonal	439.5	-52.45
11	VSS3	80µm x 80µm, rectangular	439.5	-150
12	ATE5	80µm x 80µm, rectangular	439.5	-250
13	VSS4	80µm x 80µm, rectangular	321.5	-339.5
14	DN	80µm x 80µm, octagonal	222	-339.5
15	ATE6	80µm x 80µm, rectangular	121.6	-339.5
16	FILT2	80µm x 80µm, octagonal	-215	-339.5
17	RSSI	80µm x 80µm, octagonal	-315	-339.5

18	VSS5	80µm x 80µm, rectangular	-439.5	-221.5
19	PDC1	80µm x 80µm, octagonal	-439.5	-110.5
20	PDA	80µm x 80µm, octagonal	-439.5	0
21	PDC2	80µm x 80µm, octagonal	-439.5	110.75
22	VSS6	80µm x 80µm, rectangular	-439.5	221.5

Contact Information

For technical support, contact Maxim at **www.maximintegrated.com/support**.

Disclaimer

This datasheet contains preliminary information and is subject to change.

This document does not transfer or license any intellectual property rights to the user. It does not imply any commitment to produce the device described and is intended as a proposal for a new device.

Phyworks Ltd assumes no liability or warranty for infringement of patent, copyright or other intellectual property rights through the use of this product.

Phyworks Ltd assumes no liability for fitness for particular use or claims arising from sale or use of its products.

Phyworks Ltd products are not intended for use in life critical or sustaining applications.