Vision Sensor

PHA150-F200-B17-V1D

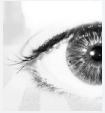

- Detects the position of an index hole
- Large capture range
- High operating range
- Integrated contrast compensation
- Compact design
- PROFINET interface
- Integrated illumination

Precision positioning on hole in the 70 mm x 70 mm housing

Function

The sensor has been developed for the precision positioning of high-bay racking operating equipment. It detects circular holes in the racking structure and their positional deviation from the nominal position. The sensor operates in two dimensions.

Dimensions

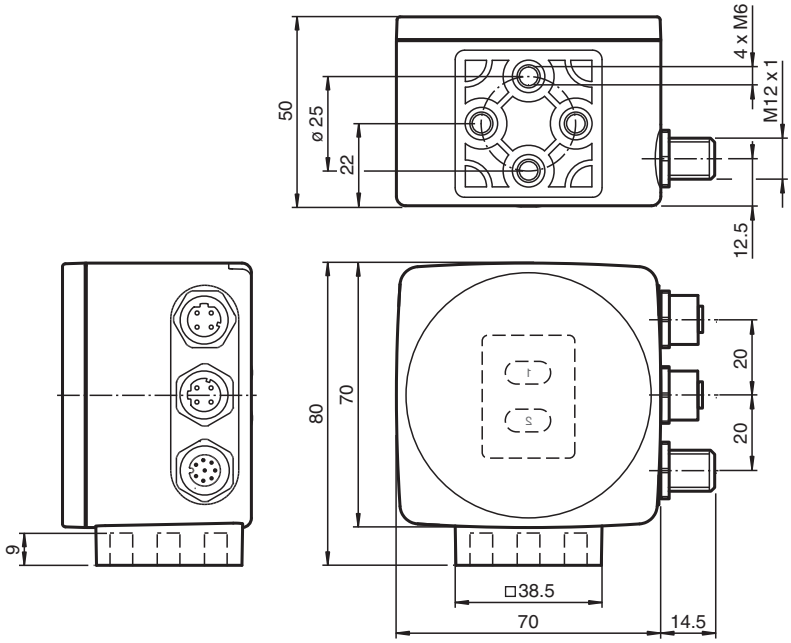

Technical Data

General specifications	
Light type	Integrated LED lightning (infrared)
Object size	Hole diameter 13 mm
Response delay	100 ms
Read distance	150 mm
Depth of focus	± 50 mm

Release date: 2021-06-11 Date of issue: 2021-06-11 Filename: 307562_eng.pdf

Technical Data

Capture range		max. 120 mm x 100 mm
Nominal ratings		
Camera		
Type		CMOS , Global shutter
Number of pixels		752 x 480 pixels
Gray scale		256
Functional safety related parameters		
$MTTF_d$		95 a
Mission Time (T_M)		10 a
Diagnostic Coverage (DC)		0 %
Indicators/operating means		
Operation indicator		LED green: Ready for operation
Function indicator		7 LEDs (communication, alignment aid, status information)
Control elements		Button for parameterization
Electrical specifications		
Operating voltage	U_B	24 V DC +/- 15 %, PELV
No-load supply current	I_0	max. 400 mA
Power consumption	P_0	6 W
Interface		
Interface type		100 BASE-TX PROFINET
Protocol		PROFINET IO Real-Time (RT) Conformance class A
Transfer rate		100 MBit/s
Conformity		
Shock resistance		EN 60068-2-27:2009
Vibration resistance		EN 60068-2-6:2008
Emitted interference		EN 61000-6-4:2007+A1:2011
Noise immunity		EN 61000-6-2:2005
Photobiological safety		exempt group according EN 62471:2008
Approvals and certificates		
CE conformity		CE
UL approval		cULus Listed, General Purpose, Class 2 Power Source
CCC approval		CCC approval / marking not required for products rated ≤36 V
Ambient conditions		
Operating temperature		0 ... 60 °C (32 ... 140 °F) , -20 ... 60 °C (-4 ... 140 °F) (noncondensing; prevent icing on the lens!)
Storage temperature		-30 ... 85 °C (-22 ... 185 °F)
Relative humidity		90 % , noncondensing
Mechanical specifications		
Housing width		70 mm
Housing height		70 mm
Housing depth		50 mm
Degree of protection		IP67
Material		
Housing		PC/ABS
Optical face		Plastic pane
Installation		4 x M6 threading
Mass		approx. 200 g

Release date: 2021-06-11 Date of issue: 2021-06-11 Filename: 307562_eng.pdf

Connection

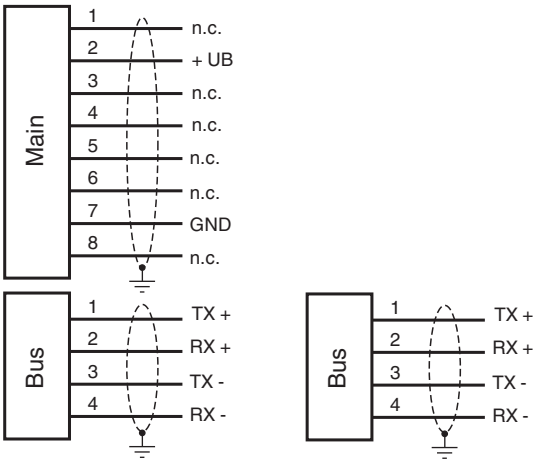

Connection Assignment

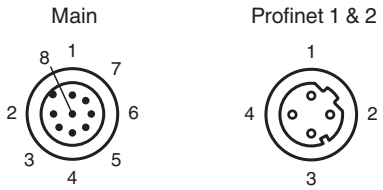

Indication

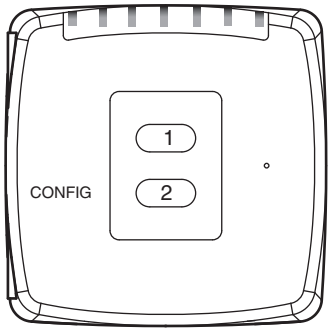

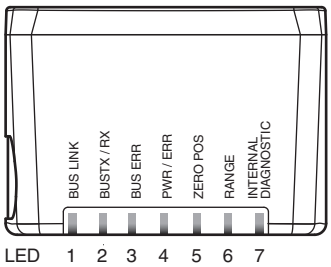

Release date: 2021-06-11 Date of issue: 2021-06-11 Filename: 307562_eng.pdf

Characteristic Curve

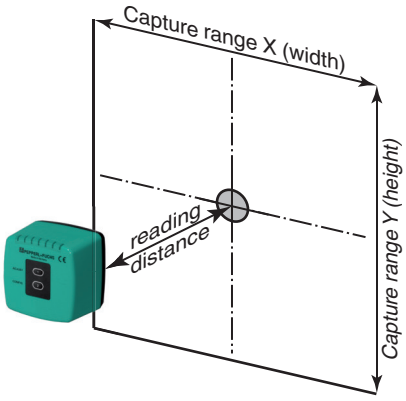

Accessories

	V19-G-5M-PUR-ABG	Female cordset single-ended M12 straight A-coded, 8-pin, PUR cable grey, shielded
	V1SD-G-2M-PUR-ABG-V1SD-G	Ethernet bus cable, M12 to M12, PUR cable 4-pin, CAT5e
	V1SD-G-5M-PUR-ABG-V1SD-G	Ethernet bus cable, M12 to M12, PUR cable 4-pin, CAT5e
	PCV-MB1	Mounting bracket for PCV* read head
	PCV-SC12A	Grounding clip for PCV system
	PCV-SC12	Grounding clip for PCV system
	V19-G-2M-PUR-ABG	Female cordset single-ended M12 straight A-coded, 8-pin, PUR cable grey, shielded

Release date: 2021-06-11 Date of issue: 2021-06-11 Filename: 307562_eng.pdf

Additional Information

General

The PHA... Vision Sensor has been developed for the rack fine positioning of stock feeders. This device detects circular holes in the rack structure and determines the position deviation of these holes in relation to the target position. The Vision Sensor operates in two dimensions.

Mounting and Commissioning

Mount the PHA... Vision Sensor in such a way that the optical surface of the device captures the optimum distance to the carrier/hole (see "Technical Data"). The stability of the Vision Sensor mounting and the manner in which the vehicle is guided must ensure that the device is not operated outside of its depth of focus range.
All Vision Sensors can be adapted to optimally meet specific requirements by means of parameterization.

Indicators and Controls

The PHA... Vision Sensor is equipped with seven indicator LEDs for carrying out visual function checks and rapid diagnostics. The read head is equipped with two buttons at the back for activating the parameterization mode.

LEDs

LED	Color	Labeling	Meaning
1	yellow	BUS LINK	PROFINET communication active
2	yellow	BUS TX / RX	Data transfer
3	red	BUS ERR	PROFINET communication error
4	green/red	PWR/ERR	Fault with power supply/general error
5	yellow	ZERO POS	Zero position reached
6	yellow	RANGE	Within detection/capture range
7	red/green/yellow	INTERNAL DIAGNOSTIC	Internal diagnostics

External Parameterization

In order to parameterize the device externally, the parameterization code is required in the form of a data matrix containing the desired parameters. Data matrix code cards detailing the step-by-step process for externally parameterizing the device are printed in the operating instructions for the Vision Sensor.

- The Vision Sensor is switched over from normal operation to parameterization mode using button 2 on the back of the device. To switch the device over, button 2 must be pressed and held for more than two seconds. LED5 then flashes.
  Note: Parameterization mode is exited automatically if the device is inactive for one minute. In this case, the Vision Sensor reverts to normal mode and operates without the settings having been changed.
- Place the parameterization code in the field of vision of the camera module. After the parameterization code is detected, the green LED4 lights up for one second. In the event of an invalid parameterization code, LED4 lights up red for two seconds.
- Briefly pressing button 2 will end parameterization mode. Unsaved changes will be lost.

Release date: 2021-06-11 Date of issue: 2021-06-11 Filename: 307562_eng.pdf