Surface Mount

Dual Matched MMIC Amplifier PHA-22H+

50Ω .05 to 3 GHz

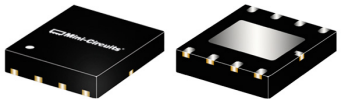

CASE STYLE: DL1020

The Big Deal

- Dual matched amplifier for push-pull & balanced amplifiers
- High IP2 and IP3
- Low Junction Temperature

Product Overview

Mini-Circuits PHA-22H+ is a dual matched wideband amplifier fabricated using advanced E-PHEMT technology, offering high dynamic range (High IP3 and Low NF) for use in 50 and 75 ohm applications. Exceptionally high IP2 has been demonstrated in wideband 50 and 75 ohm amplifiers evaluation boards. Combining this with low noise figure to enable it for use in exceptionally high dynamic range amplifiers.

Key Features

Feature	Advantages
Broadband	Covers Cable TV band and communication bands such as Cellular, Cable TV, PCS, WiMAX etc.
Matched pair for use in exceptionally high IP3 and IP2 amplifiers	Typical gain match of 0.2 dB and phase match of 1.3 deg. enables it to be used in push-pull amplifiers. Outstanding IP2.
High IP3, up to 41 dBm	Ideal for suppressing unwanted intermods in the presence of multi carriers, which is common in present day communication systems.
Low Noise Figure: 1.8 dB typical	Compare this to competitors, which in the range of 4-6 dB. Mini-Circuits amplifier improves the dynamic range.
High P1dB: 22 dBm	High P1dB enables the amplifier to operate in linear region in the presence of strong interfering signals.
Low Thermal Resistance 22°C/W	Results in low juction temperature Tj=121°C at 85°C ground lead temperature and improved reliability

Notes
A. Performance and quality attributes and conditions not expressly stated in this specification document are intended to be excluded and do not form a part of this specification document.
B. Electrical specifications and performance data contained in this specification document are based on Mini-Circuit's applicable established test performance criteria and measurement instructions.
C. The parts covered by this specification document are subject to Mini-Circuits standard limited warranty and terms and conditions (collectively, "Standard Terms"); Purchasers of this part are entitled to the rights and benefits contained therein. For a full statement of the Standard Terms and the exclusive rights and remedies thereunder, please visit Mini-Circuits' website at www.minicircuits.com/MCLStore/terms.jsp

Mini-Circuits®
www.minicircuits.com P.O. Box 350166, Brooklyn, NY 11235-0003 (718) 934-4500 sales@minicircuits.com

Surface Mount

Dual Matched MMIC Amplifier .05-3GHz

Product Features

- Two matched amplifiers in one package
- High IP3, +44 dBm at 0.85 GHz in push-pull configuration
- High IP2, +81 dBm at 0.85 GHz in push-pull configuration
- Gain, 16 dB typ. at 0.8 GHz
- P1dB, +22 dBm typ. at 0.8 GHz
- Low noise figure, 2.0 dB typ. at 0.8 GHz

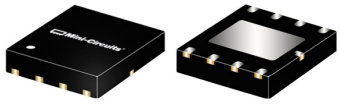

PHA-22H+

CASE STYLE: DL1020

+RoHS Compliant

The +Suffix identifies RoHS Compliance. See our web site for RoHS Compliance methodologies and qualifications

Typical Applications

- CATV
- FTTH
- Optical networks
- Base station infrastructure
- Balanced amplifiers
- 75 Ohm push-pull and balanced amplifiers

General Description

PHA-22H+ is a dual matched wideband high dynamic range amplifier. Enclosed in a 6.0 x 4.9 mm MCLP plastic package. PHA-22H+ is fabricated using E-PHEMT* technology and is ideal for use in balanced and push-pull amplifiers.

simplified schematic (each of A1, A2) and pin description

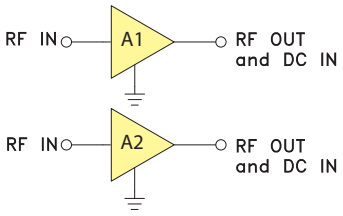

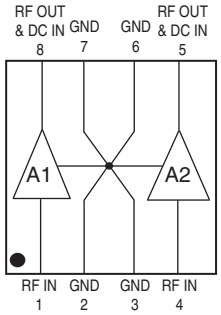

Function	Pin Number	Description
RF IN, A1	1	RF input pin. This pin requires the use of an external DC blocking capacitor chosen for the frequency of operation. (see Application circuit, Fig 2.)
RF-OUT and DC-IN, A1	8	RF output and bias pin. DC voltage is present on this pin; therefore a DC blocking capacitor is necessary for proper operation. An RF choke is needed to feed DC bias without loss of RF signal due to the bias connection, as shown in "Recommended Application Circuit", Fig 2
RF IN, A2	4	RF input pin. This pin requires the use of an external DC blocking capacitor chosen for the frequency of operation. (see Application circuit, Fig 2.)
RF-OUT and DC-IN, A2	5	RF output and bias pin. DC voltage is present on this pin; therefore a DC blocking capacitor is necessary for proper operation. An RF choke is needed to feed DC bias without loss of RF signal due to the bias connection, as shown in "Recommended Application Circuit", Fig 2
GND	2,3,6,7 & paddle	Connections to ground. Use via holes as shown in "Suggested Layout for PCB Design" to reduce ground path inductance for best performance.

* Enhancement mode pseudomorphic High Electron Mobility Transistor.

Notes

A. Performance and quality attributes and conditions not expressly stated in this specification document are intended to be excluded and do not form a part of this specification document.
B. Electrical specifications and performance data contained in this specification document are based on Mini-Circuit's applicable established test performance criteria and measurement instructions.
C. The parts covered by this specification document are subject to Mini-Circuits standard limited warranty and terms and conditions (collectively, "Standard Terms"); Purchasers of this part are entitled to the rights and benefits contained therein. For a full statement of the Standard Terms and the exclusive rights and remedies thereunder, please visit Mini-Circuits' website at www.minicircuits.com/MCLStore/terms.jsp

Mini-Circuits®

www.minicircuits.com P.O. Box 350166, Brooklyn, NY 11235-0003 (718) 934-4500 sales@minicircuits.com

Electrical Specifications[1] at 25°C, Zo=50Ω and Device Voltage 5V, unless noted

(Specifications (other than Matching or where defined as push-pull) are for each of the two matched amplifiers in the package)

Parameter		Condition (GHz)	Min.	Typ.	Max.	Units
Frequency Range			0.05		3.0	GHz
Gain		0.05	—	17.6	—	dB
		0.25	—	16.2	—	
		0.45	—	16.2	—	
		0.8	14.5	16.0	17.6	
		1.5	—	15.1	—	
		3.0	—	11.6	—	
Input Return Loss		0.05		11.9		dB
		0.25		19.7		
		0.45		19.9		
		0.8		17.6		
		1.5		11.3		
		3.0		4.6		
Output Return Loss		0.05		14.1		dB
		0.25		19.5		
		0.45		19.9		
		0.8		18.2		
		1.5		13.5		
		3.0		6.3		
Output Power @1 dB compression [2]		0.05		22.5 (69.4)		dBm (dBmV)
		0.25		22.2 (69.2)		
		0.45		22.1 (69.1)		
		0.8		22.2 (69.2)		
		1.5		22.5 (69.5)		
		3.0		21.0 (68.0)		
Output IP3 [6]		0.05	—	40.5	—	dBm
		0.25	—	40.0	—	
		0.45	—	39.4	—	
		0.8	37.0	39.0	—	
		1.5	—	40.0	—	
		3.0	—	38.6	—	
Noise Figure		0.05		1.7		dB
		0.25		1.8		
		0.45		1.9		
		0.8		2.0		
		1.5		2.1		
		3.0		2.8		
Matching between A1, A2	Amplitude Unbalance	0.05	—	0.2	—	dB
		0.25	—	0.1	—	
		0.45	—	0.1	—	
		0.8	—	0.1	0.6	
		1.5	—	0.3	—	
		3.0	—	0.35	—	
	Phase Unbalance	0.05	—	0.2	—	deg.
		0.25	—	0.54	—	
		0.45	—	0.3	—	
		0.8	—	1.1	5.0	
		1.5	—	0.9	—	
		3.0	—	1.3	—	
Device Operating Voltage			4.8	5.0	5.2	V
Device Operating Current (each amplifier)			—	141	165	mA
Device Current Variation vs. Temperature				125		µA/°C
Device Current Variation vs Voltage				0.058		mA/mV
Thermal Resistance, junction-to-ground lead [7]				22		°C/W

Absolute Maximum Ratings [4]

Parameter	Ratings
Operating Temperature[5]	-40°C to 85°C
Storage Temperature	-55°C to 150°C
Operating Current at 5V[6]	210 mA
Power Dissipation[6]	1000 mW
Input Power (CW)	+24 dBm
DC Voltage (pads 5,8)	6V

Push-Pull Amplifier Typical Performance [3]

Freq. GHZ	TB-566-75H+ (75Ω)			TB-566-50H+ (50Ω)			TB-666-50H+ (50Ω)		
	Gain (dB)	Output IP3 (dBm)	Output IP2 (dBm)	Gain (dB)	Output IP3 (dBm)	Output IP2 (dBm)	Gain (dB)	Output IP3 (dBm)	Output IP2 (dBm)
0.05	15.7	42.8	78.2	14.1	41.4	77.71	14.5	40.5	75.5
0.25	14.8	43.8	81.5	12.9	44.0	81.8	14.0	40.4	73.6
0.45	14.7	43.3	85.0	13.0	41.2	84.4	14.2	42.1	85.9
0.85	14.3	44.3	80.8	12.4	38.9	75.7	13.3	38.6	73.5
1.20	13.4	41.7	75.1	11.0	37.7	66.7	12.3	38.5	64.5
1.30	13.0	41.0	75.0	—	—	—	12.1	38.7	61.3
1.50	—	—	—	—	—	—	11.7	38.8	62.4
2.00	—	—	—	—	—	—	11.1	49.6	70.7
3.00	—	—	—	—	—	—	7.5	39.0	76.8

Notes:
(1) Measured on Mini-Circuits Test Board TB-561-22H+ (characterization test circuit, Fig 1a.)
(2) Current increases at P1dB
(3) Measured on evaluation boards (push-pull amplifiers) TB-566-50H+, TB-666-50H+ (50Ω) and TB-566-75H+ (75Ω). See Characterization Test Circuit (Fig. 1b)
(4) Permanent damage may occur if any of these limits are exceeded. These ratings are not intended for continuous normal operation.
(5) Defined with reference to ground pad temperature.
(6) Per single ended amplifier
(7) Θjc= Junction Temperature-85°C / Voltage X sum of current in A1 & A2

Notes
A. Performance and quality attributes and conditions not expressly stated in this specification document are intended to be excluded and do not form a part of this specification document.
B. Electrical specifications and performance data contained in this specification document are based on Mini-Circuit's applicable established test performance criteria and measurement instructions.
C. The parts covered by this specification document are subject to Mini-Circuits standard limited warranty and terms and conditions (collectively, "Standard Terms"); Purchasers of this part are entitled to the rights and benefits contained therein. For a full statement of the Standard Terms and the exclusive rights and remedies thereunder, please visit Mini-Circuits' website at www.minicircuits.com/MCLStore/terms.jsp

Mini-Circuits®
www.minicircuits.com P.O. Box 350166, Brooklyn, NY 11235-0003 (718) 934-4500 sales@minicircuits.com

Characterization Test Circuit

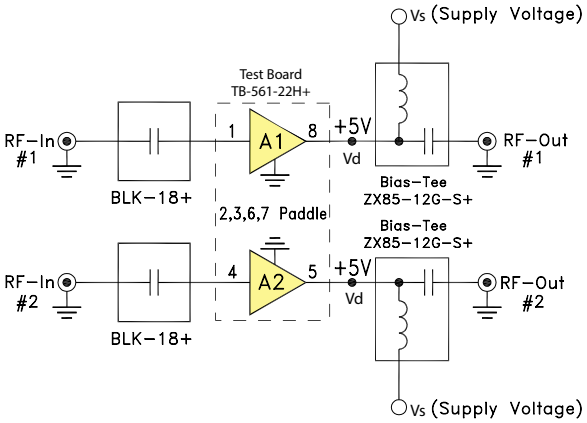

Fig 1a. Block Diagram of Test Circuit used for characterization. (DUT tested in Mini-Circuits Test board TB-561-22H+, except for IP2) Gain, Return loss, Output power at 1dB compression (P1 dB) , output IP3 (OIP3) and noise figure measured using Agilent's N5242A PNA-X microwave network analyzer.

Conditions:
1. Gain and Return loss: Pin= -25dBm
2. Output IP3 (OIP3): Two tones, spaced 1MHz apart, 5 dBm/tone at output.

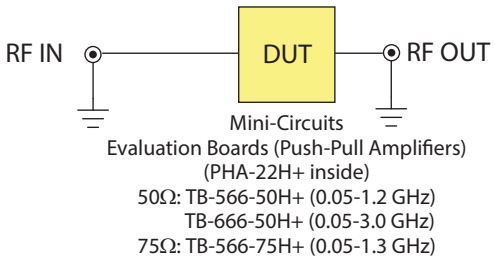

Fig 1b. Block Diagram of Test Set up used for characterization of Gain, IP2, IP3. Measured using Agilent's signal generators E8527D and Spectrum analyzer N9020A.

Conditions:
1. Two tones, spaced 1MHz apart, 8 dBm/tone at output. IP2 is measured at the sum frequency of the tones.

Recommended Application Circuit

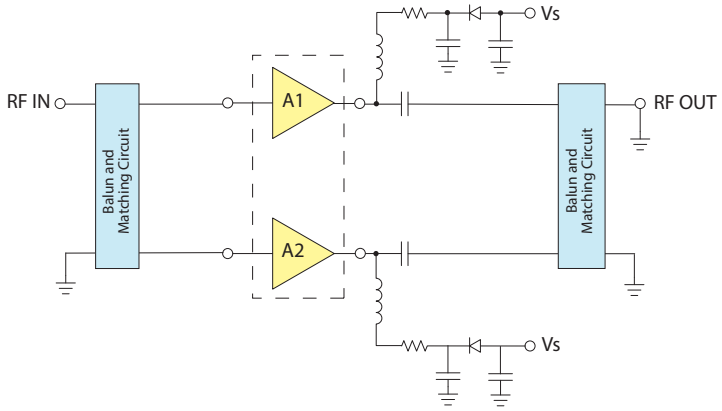

Fig 2. Recommended Application Circuit.
Refer to following Mini-Circuits Evaluation Boards for parts list.
50Ω: TB-566-50H+
TB-666-50H+
75Ω: TB-566-75H+

Notes
A. Performance and quality attributes and conditions not expressly stated in this specification document are intended to be excluded and do not form a part of this specification document.
B. Electrical specifications and performance data contained in this specification document are based on Mini-Circuit's applicable established test performance criteria and measurement instructions.
C. The parts covered by this specification document are subject to Mini-Circuits standard limited warranty and terms and conditions (collectively, "Standard Terms"); Purchasers of this part are entitled to the rights and benefits contained therein. For a full statement of the Standard Terms and the exclusive rights and remedies thereunder, please visit Mini-Circuits' website at www.minicircuits.com/MCLStore/terms.jsp

Mini-Circuits®
www.minicircuits.com P.O. Box 350166, Brooklyn, NY 11235-0003 (718) 934-4500 sales@minicircuits.com

Product Marking

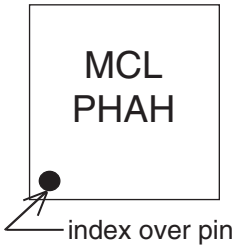

Marking may contain other features or characters for internal lot control

Additional Detailed Technical Information *additional information is available on our dash board. To access this information click here*	
Performance Data	Data Table
	Swept Graphs
	S-Parameter (S2P Files) Data Set (.zip file)
Case Style	DL1020 *Plastic package, exposed paddle* *lead finish: tin/silver/nickel*
Tape & Reel **Standard quantities available on reel**	F68 *7" reels with 20, 50, 100, 200, 500 or 1K devices* *13" reels with 2K, 3K, 4K devices*
Suggested Layout for PCB Design	PL-322
Evaluation Board	TB-566-50H+ (50Ω, 0.05-1.2 GHz) TB-566-75H+ (75Ω, 0.05-1.3 GHz) TB-666-50H+ (50Ω, 0.05-3 GHz)
Environmental Ratings	ENV08T2

ESD Rating

Human Body Model (HBM): Class 1B (500 to <1000V) in accordance with ANSI/ESD STM 5.1 - 2001
Machine Model (MM): Class M1 (Pass 25V) in accordance with ANSI/ESD STM5.2-1999; passes 25V

MSL Rating

Moisture Sensitivity: MSL1 in accordance with IPC/JEDEC J-STD-020D

MSL Test Flow Chart

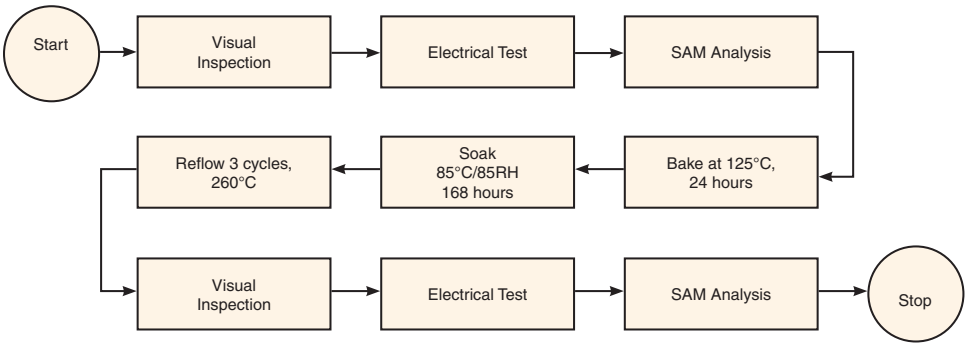

Notes
A. Performance and quality attributes and conditions not expressly stated in this specification document are intended to be excluded and do not form a part of this specification document.
B. Electrical specifications and performance data contained in this specification document are based on Mini-Circuit's applicable established test performance criteria and measurement instructions.
C. The parts covered by this specification document are subject to Mini-Circuits standard limited warranty and terms and conditions (collectively, "Standard Terms"); Purchasers of this part are entitled to the rights and benefits contained therein. For a full statement of the Standard Terms and the exclusive rights and remedies thereunder, please visit Mini-Circuits' website at www.minicircuits.com/MCLStore/terms.jsp

Mini-Circuits®
www.minicircuits.com P.O. Box 350166, Brooklyn, NY 11235-0003 (718) 934-4500 sales@minicircuits.com