PH530-S8

High Linearity InGaP HBT Amplifier

Features

- 800MHz - 3000MHz
- 20.0 dB Gain at 900MHz
- +30 dBm P1dB
- +45 dBm Output IP3
- Single Voltage Supply
- Lead-free / Green / RoHS-compliant SOIC-8 Package

Applications

- Mobile Infrastructure
- Cellular, GSM
- PCS, WCDMA, WiBro, WiMax
- W-LAN / ISM
- RFID / Fixed Wireless

Functional Diagram

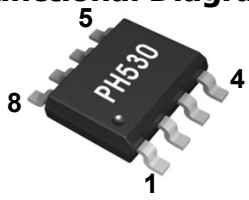

Function	Pin No.
RF IN	3
RF OUT / Bias	6,7
N/C	1,8
Ground	2,4,5

Description

The PH530-S8 is a high performance InGaP HBT MMIC Amplifier and high linearity driver amplifier in a high quality SOIC-8 package. The device features excellent Input and output return loss, highly linear performance. The device can be easily matched to obtain optimum power and linearity. The product is targeted for use as driver amplifier for wireless infrastructure applications. The PH530-S8 operates from a single +5 voltage supply and have an internal active bias. All devices are 100% RF and DC tested

Specifications

Symbol	Parameters	Units	Freq.	Min.	Typ.	Max.
S21	Gain	dB	900 MHz 1900 MHz 2140 MHz 2350 MHz		20.0 15.7 14.8 14.0	
S11	Input Return Loss	dB	900 MHz 1900 MHz 2140 MHz 2350 MHz		-16 -18 -18 -15	
S22	Output Return Loss	dB	900 MHz 1900 MHz 2140 MHz 2350 MHz		-13 -15 - 20 -16	
P1dB	Output Power @1dB compression	dBm	900 MHz 1900 MHz 2140 MHz 2350 MHz		30.0 29.5 29.5 29.5	
OIP3	Output Third Order intercept	dBm	900 MHz 1900 MHz 2140 MHz 2350 MHz		45.0 46.0 46.0 45.0	
NF	Noise Figure	dB	900 MHz 1900 MHz 2140 MHz 2350 MHz		3.9 3.9 4.1 4.1	
V / I	Device voltage / current	V/mA			5/260	
Rth	Thermal Resistance	°C/W			44	

Test Conditions : T=25°C, Supply Voltage=+5V, 50ohm System, OIP3 measured with two tones at an output power of +9dBm/tone separated by 1MHz.

900 MHz Application Circuit

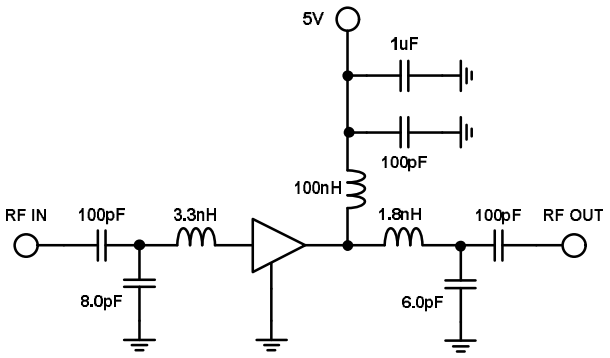

Frequency	900 MHz
S21 : Gain	20.2 dB
S11 : Input Return Loss	-17 dB
S22 : Output Return Loss	-15 dB
Output P1dB	+30.0 dBm
Output IP3 @8dBm	+46.5 dBm
IS-95A Ch. Power @ -45dBc ACPR	+23.5 dBm
Noise Figure	3.8 dB
Supply Voltage	5 V
Current	262 mA

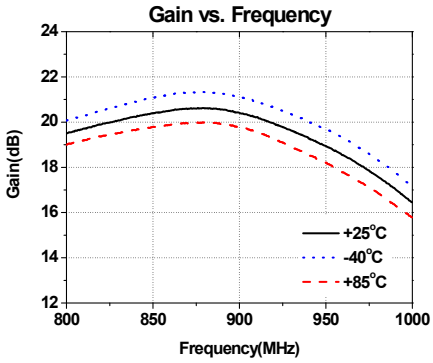

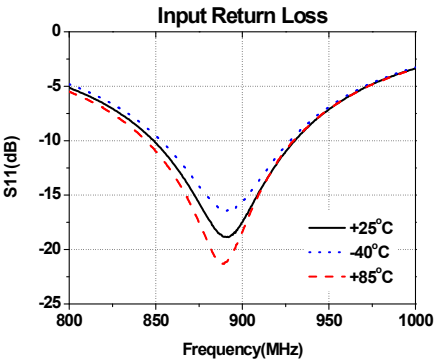

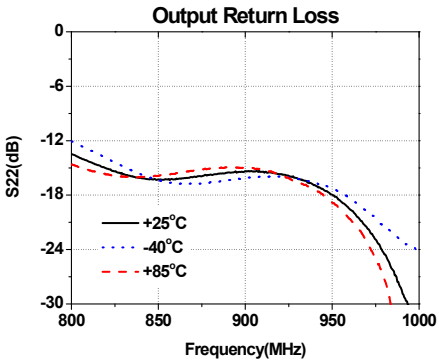

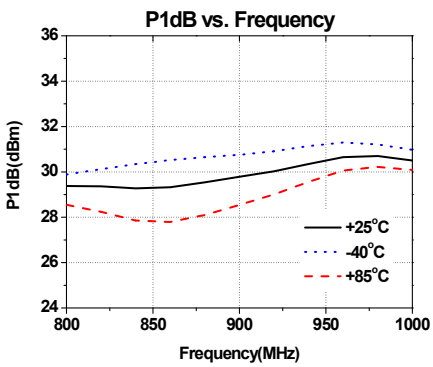

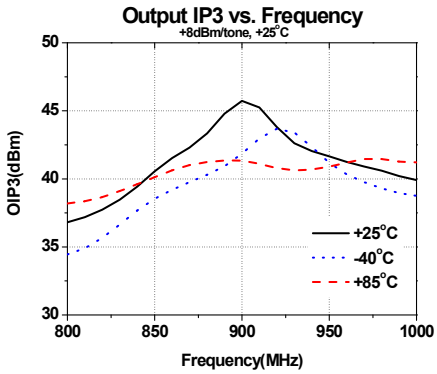

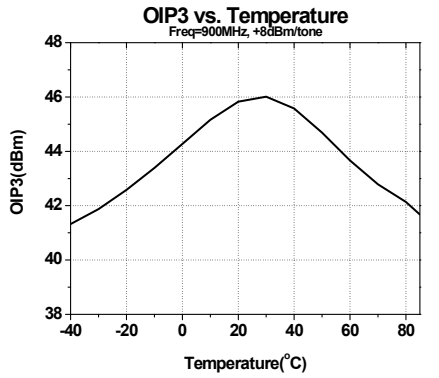

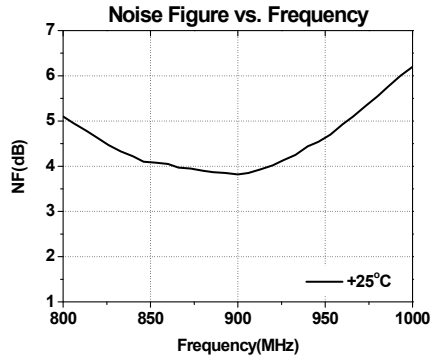

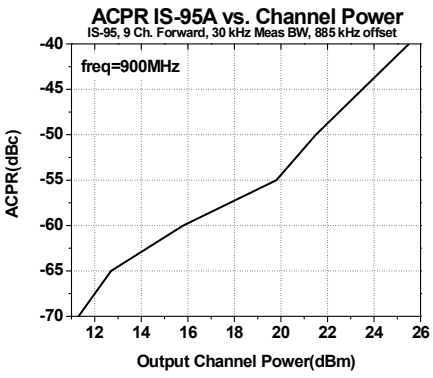

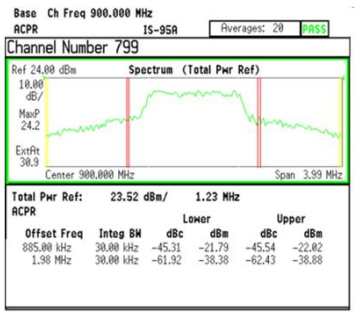

1900 MHz Application Circuit

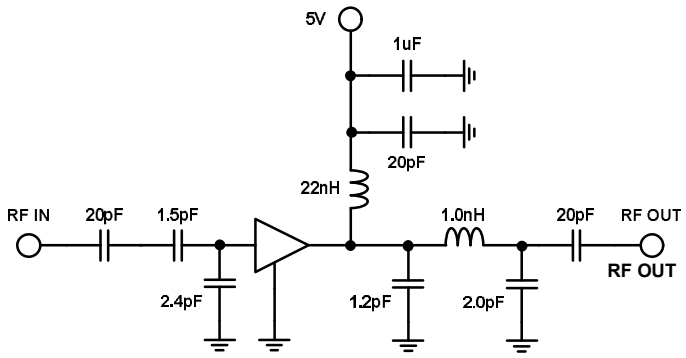

Frequency	1900 MHz
S21 : Gain	15.9 dB
S11 : Input Return Loss	-20 dB
S22 : Output Return Loss	-16 dB
Output P1dB	+29.7 dBm
Output IP3 @9dBm	+46.5 dBm
IS-95A Ch. Power @ -45dBc ACPR	+23.6 dBm
Noise Figure	3.8 dB
Supply Voltage	5 V
Current	262 mA

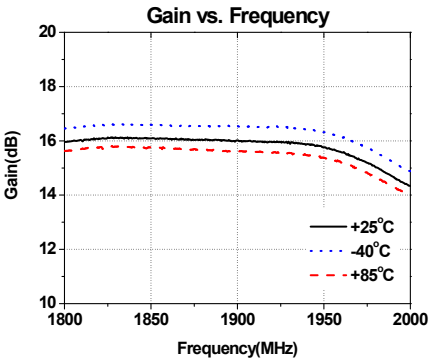

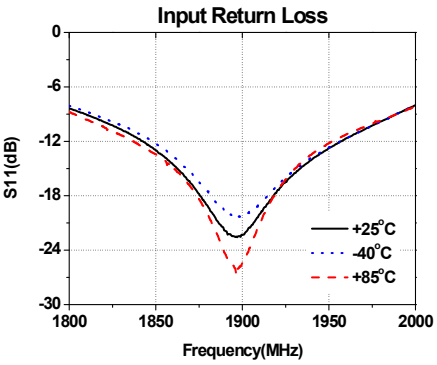

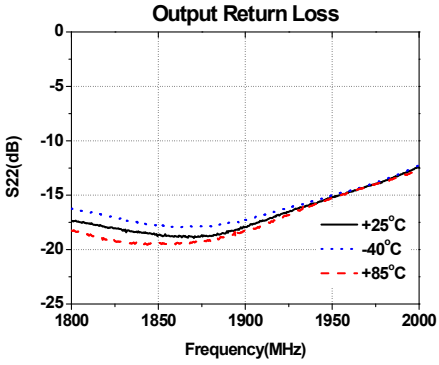

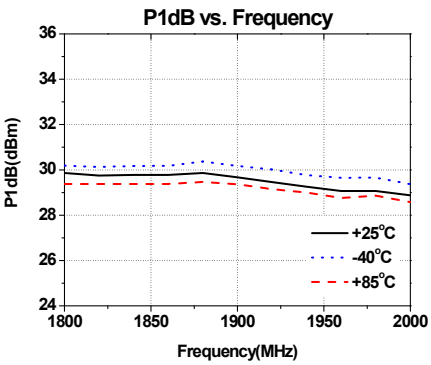

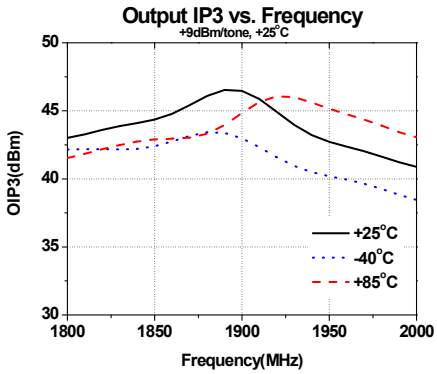

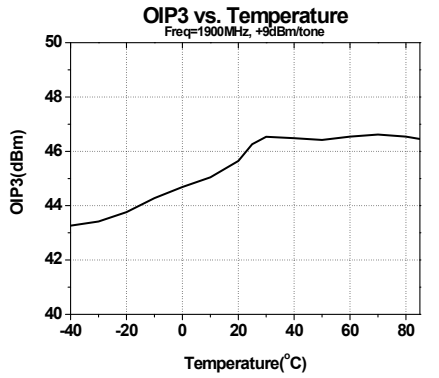

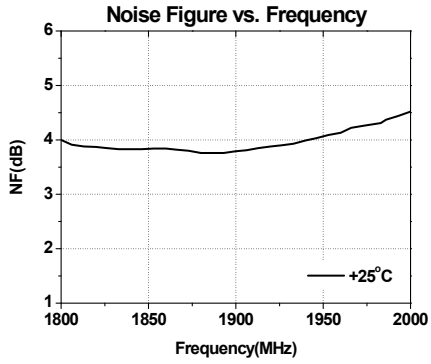

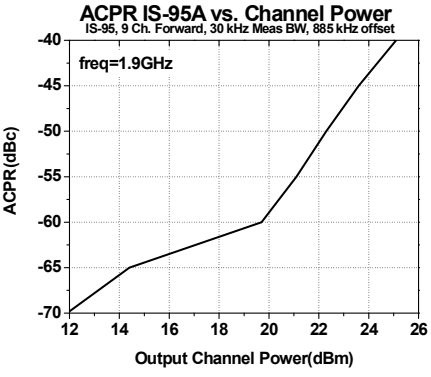

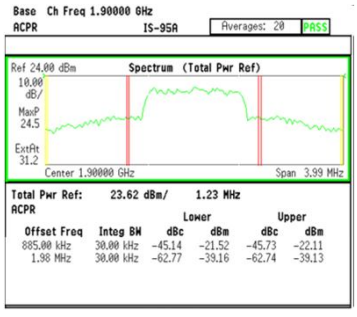

2140 MHz Application Circuit

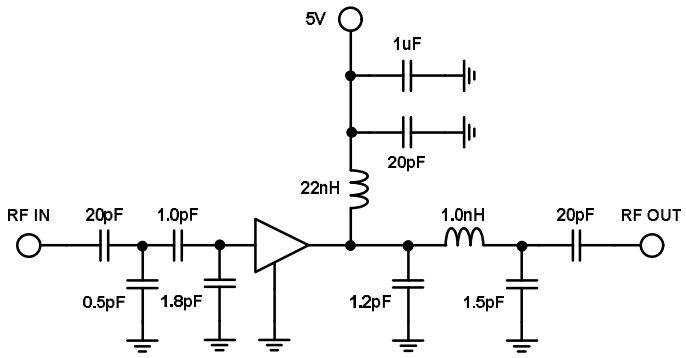

Frequency	2140 MHz
S21 : Gain	15.0 dB
S11 : Input Return Loss	-20 dB
S22 : Output Return Loss	-23 dB
Output P1dB	+29.5 dBm
Output IP3 @9dBm	+46.5 dBm
WCDMA Ch. Power @ -45dBc ACLR	+21.0 dBm
Noise Figure	4.0 dB
Supply Voltage	5 V
Current	262 mA

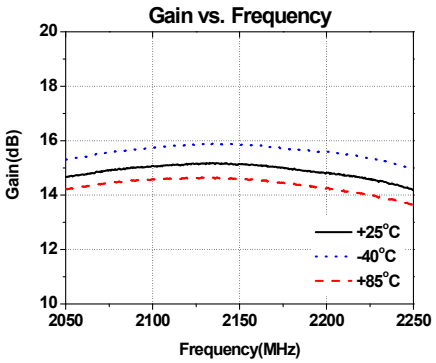

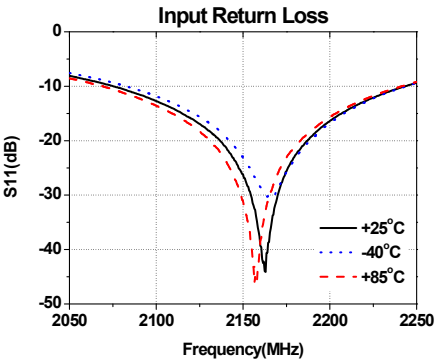

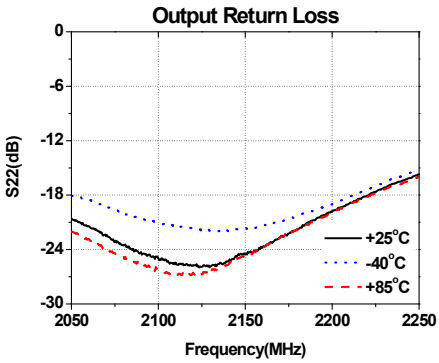

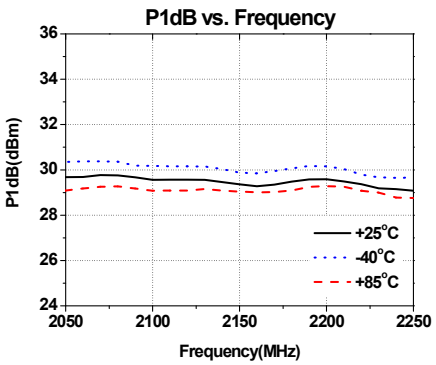

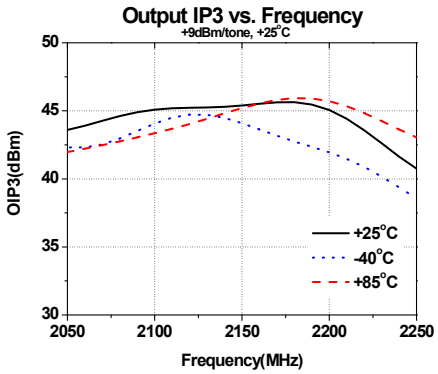

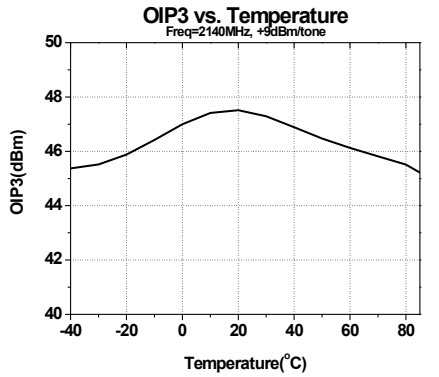

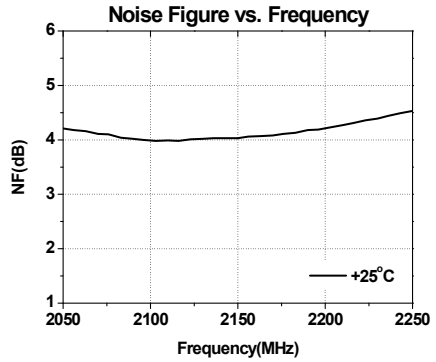

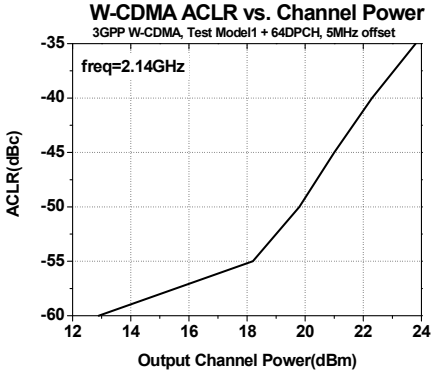

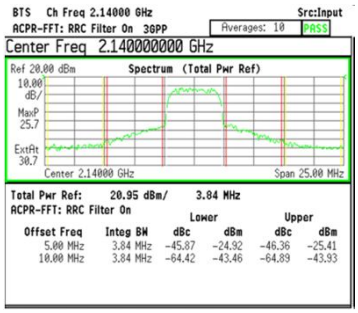

2350 MHz Application Circuit

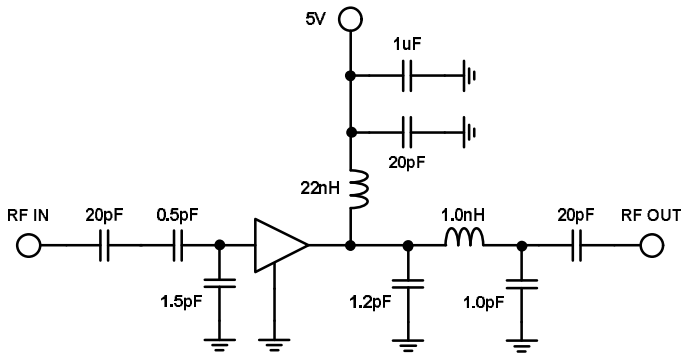

Frequency	2350 MHz
S21 : Gain	14.2 dB
S11 : Input Return Loss	-17 dB
S22 : Output Return Loss	-19 dB
Output P1dB	+29.6 dBm
Output IP3 @9dBm	+45.5 dBm
Noise Figure	4.0 dB
Supply Voltage	5 V
Current	262 mA

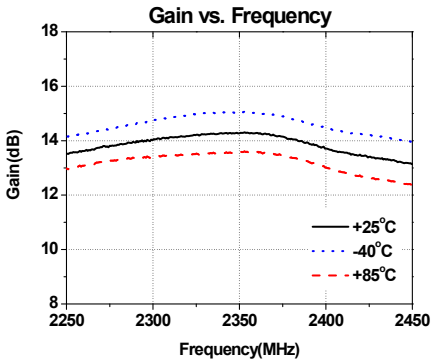

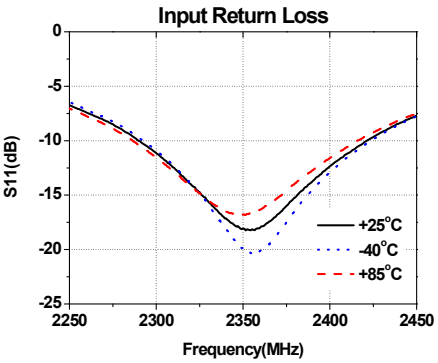

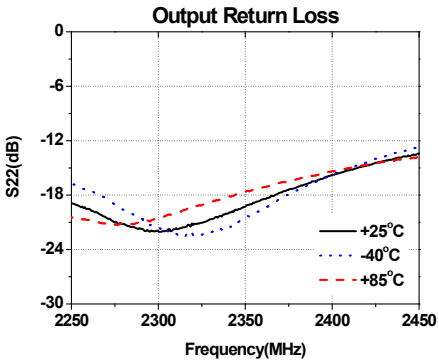

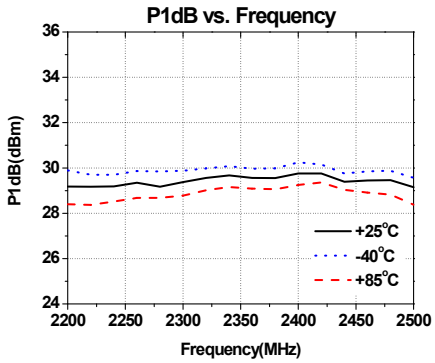

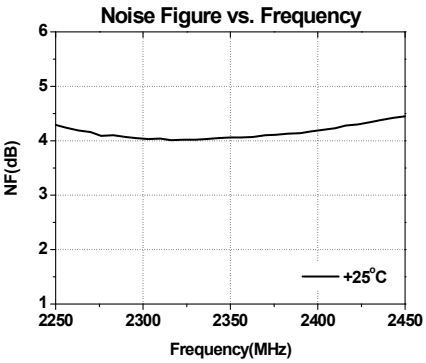

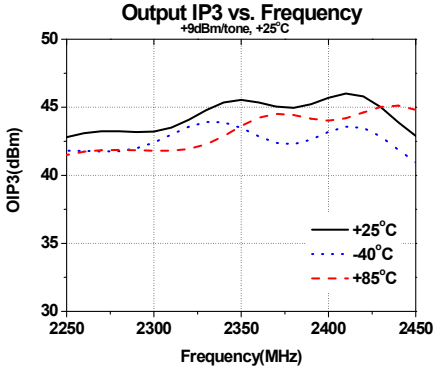

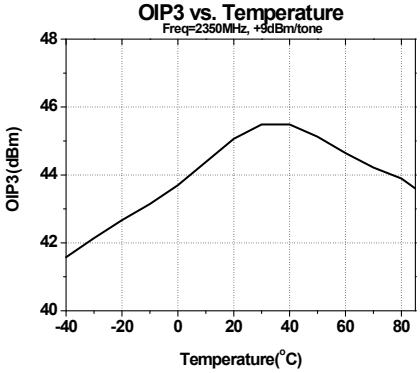

2550 MHz Application Circuit

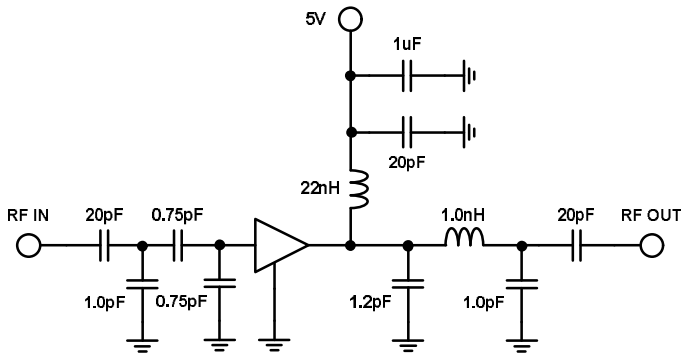

Frequency	2550 MHz
S21 : Gain	13.5 dB
S11 : Input Return Loss	-19 dB
S22 : Output Return Loss	-18 dB
Output P1dB	+29.0 dBm
Output IP3 @9dBm	+45.0 dBm
Noise Figure	4.0 dB
Supply Voltage	5 V
Current	262 mA

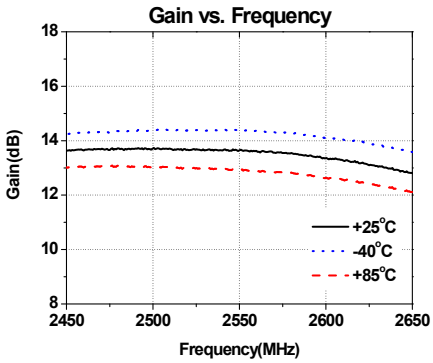

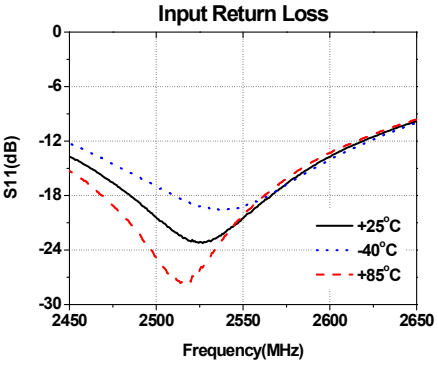

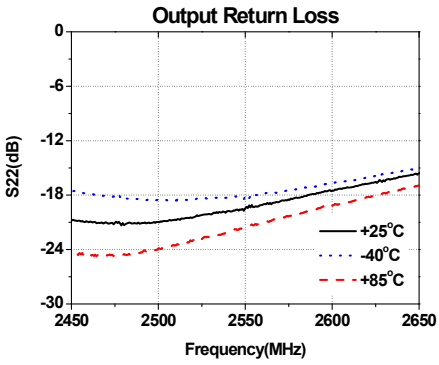

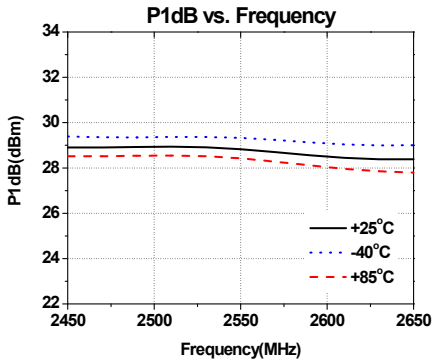

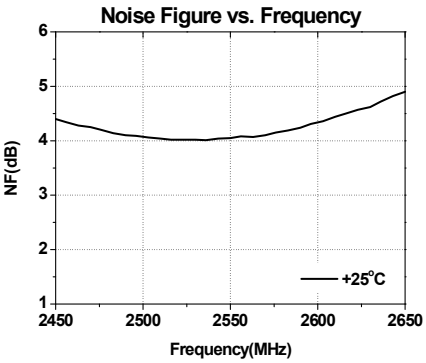

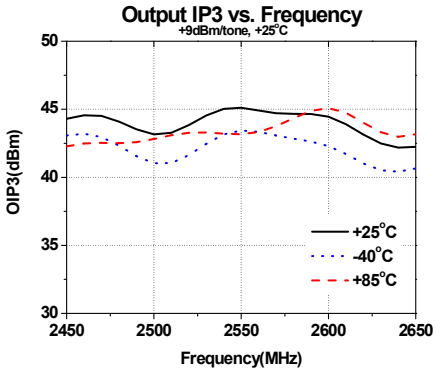

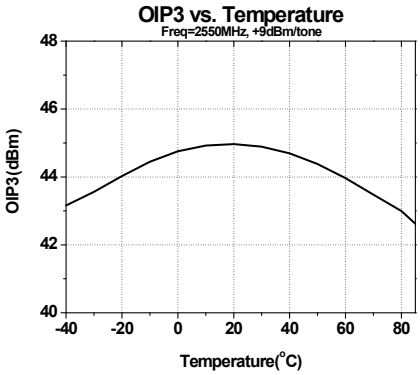

Absolute Maximum Ratings

Parameter	Rating	Unit
Device Voltage	+6	V
Device Current	370	mA
RF Power Input	20	dBm
Storage Temperature	-55 to +125	°C
Ambient Operating Temperature	-40 to +85	°C
Junction Temperature	180	°C

Operation of this device above any of these parameters may cause permanent damage.

Lead-free /RoHS Compliant / Green SOIC-8 Package Outline

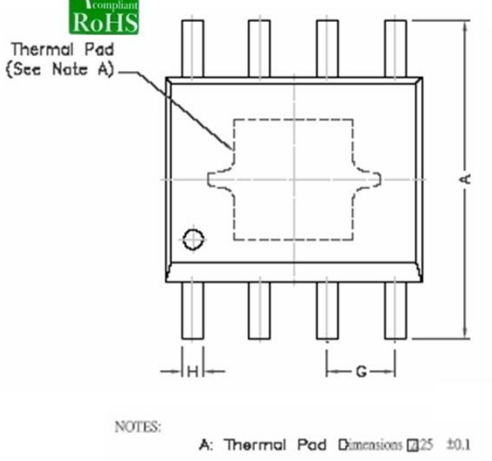

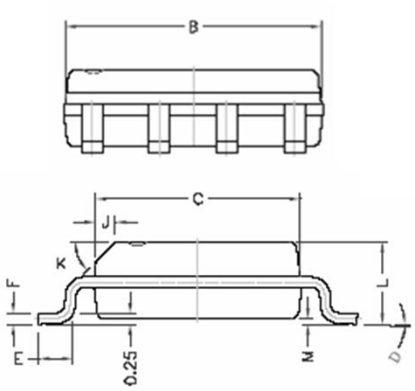

REF.	DIMENSIONS Millimeters	
	Min.	Max.
A	5.80	6.20
B	4.80	5.00
C	3.80	4.00
D	0°	8°
E	0.40	0.90
F	0.19	0.25
M	0	0.15
H	0.35	0.49
L	1.35	1.75
J	0.375 REF.	
K	45°	
G	1.27 TYP.	

Land Pattern

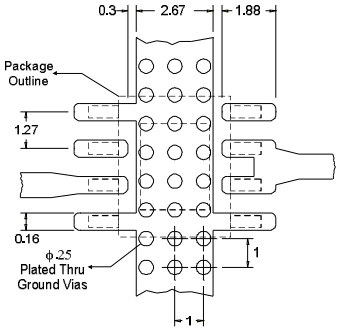

ESD / MSL Ratings

1. ESD sensitive device.
   Observe Handling Precautions.
2. ESD Rating : Class 1C(Passes at 1000V min.)
   Human Body Model (HBM), JESD22-A114
3. ESD Rating : Class IV (Passes at 1000V min.)
   Charged Device Model (CDM), JESD22-C101
4. MSL (Moisture Sensitive Level) Rating : Level 3
   at +260°C Convection reflow, J-STD-020

Evaluation Board Layout (4x4)

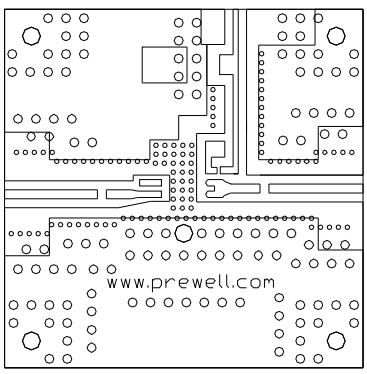

Mounting Instructions

1. Use a large ground pad area with many plated through-holes as shown.
2. We recommend 1 oz copper minimum.
3. Measurement for our data sheet was made on 0.8mm thick FR-4 Board.
4. Add as much copper as possible to inner and outer layers near the part to ensure optimal thermal performance.
5. RF trace width depends on the board material and construction.
6. Add mounting screws near the part to fasten the board to a heatsink.