POWERTIP

PG 12232-F

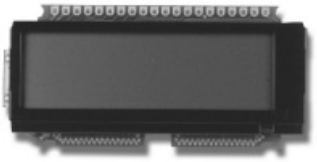

OUTLINE DIMENSION & BLOCK DIAGRAM

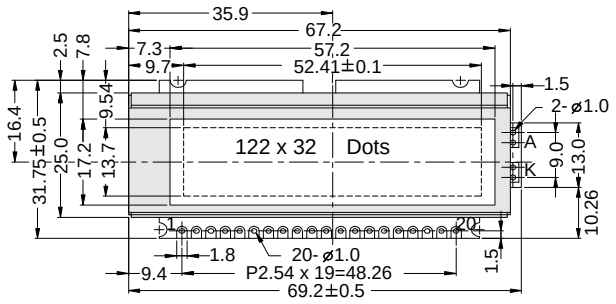

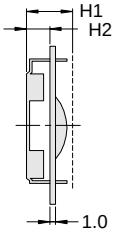

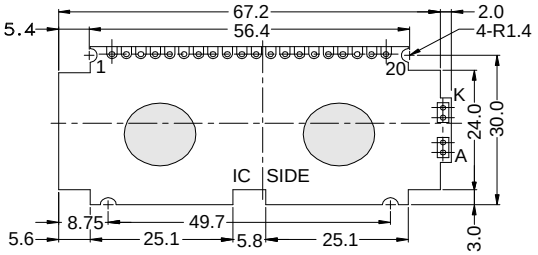

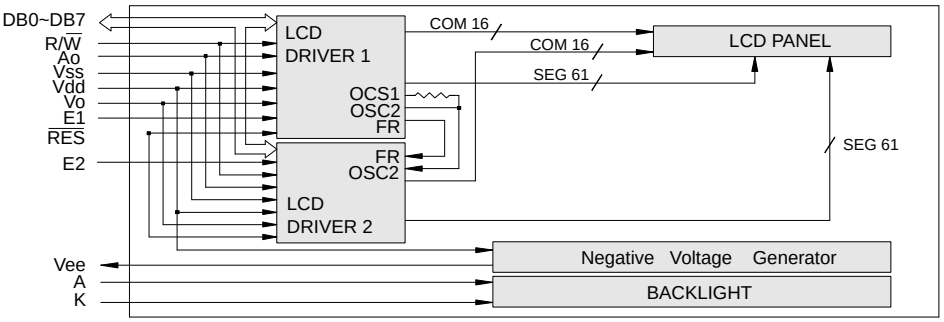

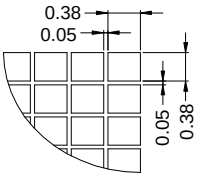

The tolerance unless classified ±0.3mm

MECHANICAL SPECIFICATION			
Overall Size	69.2 x 31.75	Module	H2 / H1
View Area	57.2 x 17.2	W /O B/L	4.1 / 8.0
Dot Size	0.38 x 0.38	EL B/L	4.1 / 8.0
Dot Pitch	0.43 x 0.43	LED B/L	7.0 / 11.0

PIN ASSIGNMENT		
Pin no.	Symbol	Function
1	Vss	Power supply(GND)
2	Vdd	Power supply(+)
3	Vo	Contrast Adjust
4	Vee	Poewr supply for LCD
5	Ao	L: Instruction / H: Data
6	E1	Enable driver 1
7	E2	Enable driver 2
8	DB0	Data bit 0
9	DB1	Data bit 1
10	NC/Vdd	NC or anode voltage
11	NC/Vss	NC or cathode voltage
12-17	DB2-DB7	Data bit 2 ~ bit 7
18	NC/R/W	NC or data read/write
19	A	Power supply for LED B/L (+)
20	K	Power supply for LED B/L (–)

ABSOLUTE MAXIMUM RATING					
Item	Symbol	Condition	Min.	Max.	Units
Supply for logic voltage	Vdd-Vss	25°C	-0.3	8	V
LCD driving supply voltage	Vdd-Vee	25°C	-0.3	16.5	V
Input voltage	Vin	25°C	-0.3	Vdd+0.3	V

ELECTRICAL CHARACTERISTICS										
Item	Symbol	Condition	Min.		Typical		Max.		Units
Power supply voltage	Vdd-Vss	25°C	2.7		–		5.5		V
LCD operation voltage	Vop	Top	N	W	N	W	N	W	V
		-20°C	–	6.1	–	6.5	–	6.9	V
		0°C	5.0	–	5.3	–	5.6	–	V
		25°C	4.8	4.6	5.0	5.0	5.3	5.4	V
		50°C	4.5	–	4.8	–	5.2	–	V
		70°C	–	4.1	–	4.4	–	4.7	V
LCM current consumption (No B/L)	Idd	Vdd=5V	–		1		2.5		mA
Backlight current consumption	LED/edge	VB/L=4.2V	–		–		–		mA
	LED/array	VB/L=4.2V	–		180		–		mA

REMARK

LCD option: STN, TN, FSTN

Backlight Option: LED,EL Backlight feature, other Specs not available on catalog is under request.