

PFC-2320-3

Magnet Float

RoHS

REACH

Data

Float housing	PP Foam
Magnet	Ferrite Y10
Magnetical Orientation	axially

Remanence Br	mT	215
Coercivity HcB	kA/m	143
Coercivity HcJ	kA/m	203
Energy Product (BH) max.	kJ/m³	8
Magnetic Moment M (in total)	x10^{-6} Vs cm	3.7
Operating Temperature max.	°C	80

Nominal values unless otherwise specified.

Dimensions in mm

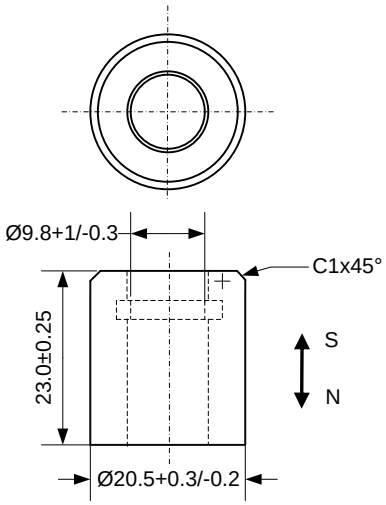

Customized types, other magnet materials and high temperature grades available

Mechanical Characteristics @ 25°C

Density of float typ. *	g/cm³	0.7
Weight per piece	g	4.4±0.3

* In delivery condition

- Please see page 30 of our main catalogue or http://pic-gmbh.com/en/tech-center/housing-materials/application-notes/ for the chemical resistance of the float material. The density of the applicable medium has to be 20% above the density of the used float material to ensure proper and secure function.

PIC Proximity Instrumentation Controls
Kontaktbauelemente GmbH
Nibelungenstr. 5A
90530 Wendelstein, Germany
Phone +49 911 99 59 06-0
Fax +49 911 99 59 06-99
info@pic-gmbh.com
pic-gmbh.com