PASTERNACK®
THE ENGINEER'S RF SOURCE



WR-137 Waveguide Gasket kit, CPR137 Grooved Flange, Non-Conductive

Waveguide Accessories Technical Data Sheet PEWGK1012

Description

This is a gasket kit consisting of a non-conductive gasket, stainless steel screws, nuts, and washers to connect two waveguide flanges together. The PEWGK1012 is the kit made expressly for WR-137 CPR-137G waveguide flange. The gasket is made of Shore "A" 70 silicone elastomer. The screws, nuts and washers are made of stainless steel.

Pasternack has waveguide gaskets (both conductive and non-conductive), screws and other accessories that you need for your waveguides. Often people can forget to order items like screws or waveguide supports. Pasternack has a full line of waveguide accessories available for same day shipment so that you do not have to wait for weeks to get your system working.

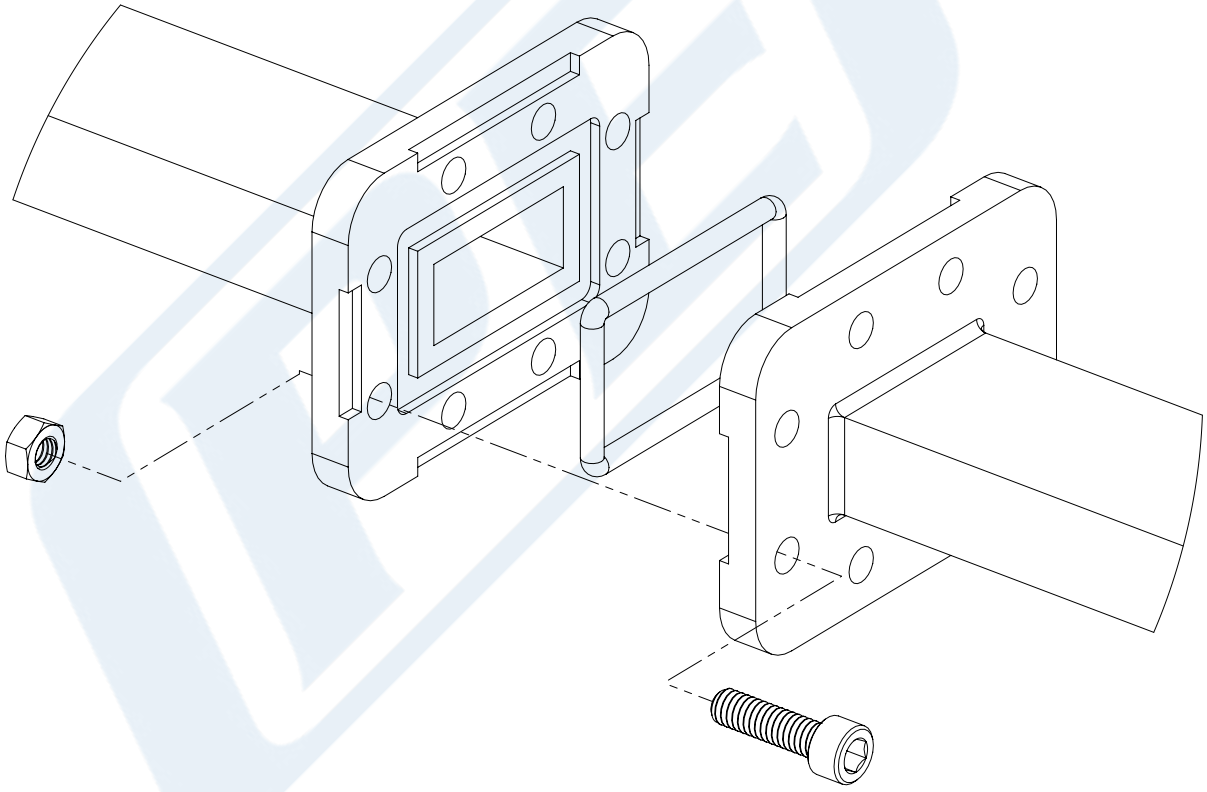

Click the following link (or enter part number in "SEARCH" on website) to obtain additional part information including price, inventory and certifications: WR-137 Waveguide Gasket kit, CPR137 Grooved Flange, Non-Conductive PEWGK1012

Pasternack Enterprises, Inc. • P.O. Box 16759, Irvine, CA 92623
Phone: (866) 727-8376 or (949) 261-1920 • **Fax:** (949) 261-7451
Sales@Pasternack.com • Techsupport@Pasternack.com

ISO 9001 : 2008 Registered

© 2017 Pasternack Enterprises All Rights Reserved

PASTERNACK®
THE ENGINEER'S RF SOURCE

WR-137 Waveguide Gasket kit, CPR137 Grooved Flange, Non-Conductive



Waveguide Accessories Technical Data Sheet PEWGK1012

Compliance Certifications (see product page for current document)

WR-137 Waveguide Gasket kit, CPR137 Grooved Flange, Non-Conductive from Pasternack Enterprises has same day shipment for domestic and International orders. Our RF, microwave and millimeter wave products maintain a 99.4% availability and are part of the broadest selection in the industry.

Click the following link (or enter part number in "SEARCH" on website) to obtain additional part information including price, inventory and certifications: WR-137 Waveguide Gasket kit, CPR137 Grooved Flange, Non-Conductive PEWGK1012

URL: https://www.pasternack.com/wr-137-waveguide-gasket-kit-cpr137-grooved-flange-non-conductive-pewgk1012-p.aspx

The information contained in this document is accurate to the best of our knowledge and representative of the part described herein. It may be necessary to make modifications to the part and/or the documentation of the part, in order to implement improvements. Pasternack reserves the right to make such changes as required. Unless otherwise stated, all specifications are nominal. Pasternack does not make any representation or warranty regarding the suitability of the part described herein for any particular purpose, and Pasternack does not assume any liability arising out of the use of any part or documentation.

Pasternack Enterprises, Inc. • P.O. Box 16759, Irvine, CA 92623
Phone: (866) 727-8376 or (949) 261-1920 • **Fax:** (949) 261-7451
Sales@Pasternack.com • Techsupport@Pasternack.com

ISO 9001 : 2008 Registered

© 2017 Pasternack Enterprises All Rights Reserved

PEWGK1012 CAD Drawing

WR-137 Waveguide Gasket kit, CPR137 Grooved Flange, Non-Conductive

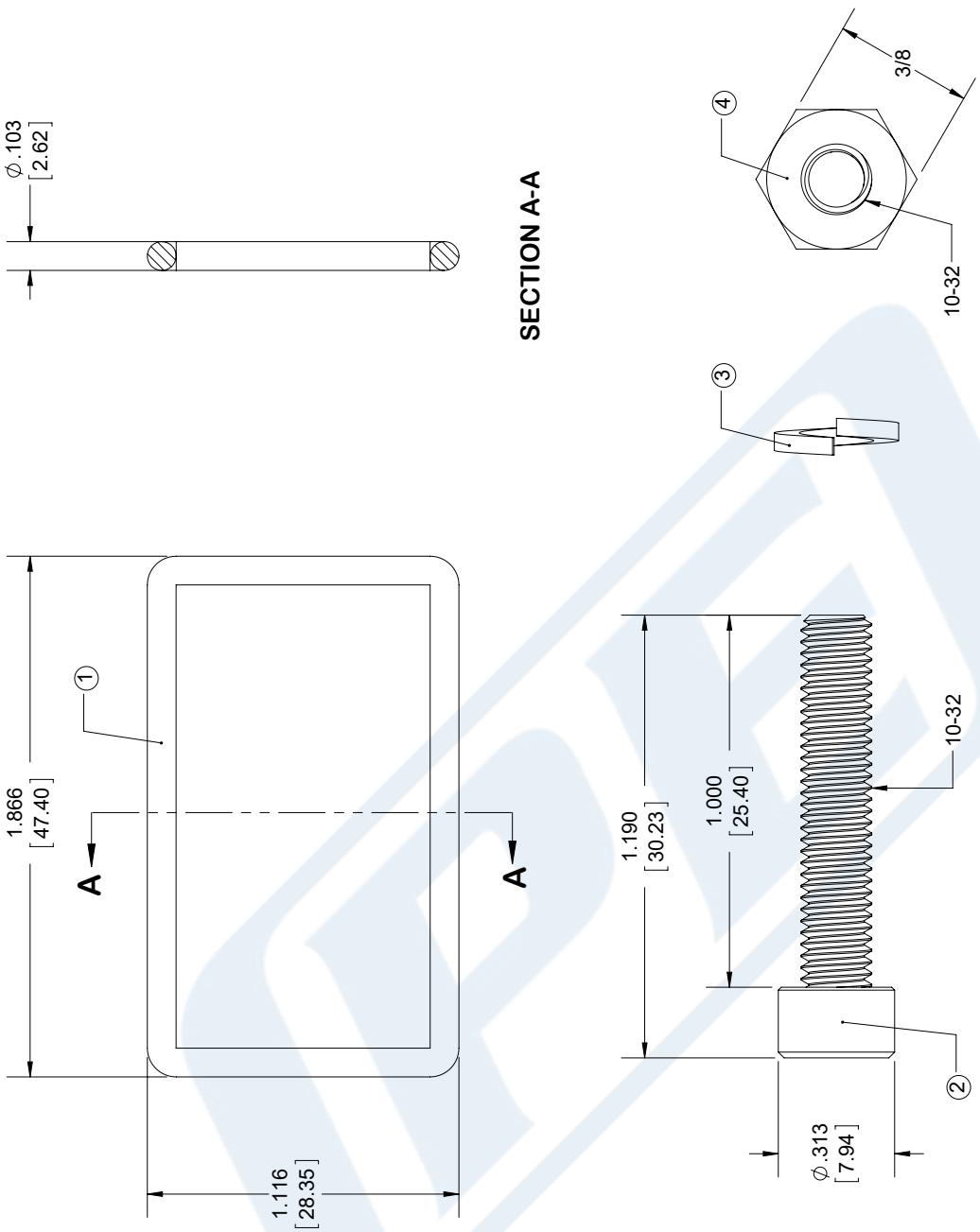

ITEM NO.	DESCRIPTION	QTY.
1	GASKET	1
2	10-32 X 1.0, SCREW	4
3	#10 SPLIT LOCK WASHER	4
4	10-32 HEX, NUT	4

STANDARD TOLERANCES
.X ±0.2
.XX ±0.01
.XXX ±0.005

*STANDARD TOLERANCES APPLY ONLY TO DIMENSIONS IN INCHES

NOTES:
1. UNLESS OTHERWISE SPECIFIED ALL DIMENSIONS ARE NOMINAL.
2. ALL SPECIFICATIONS ARE SUBJECT TO CHANGE WITHOUT NOTICE AT ANY TIME
3. DIMENSIONS ARE IN INCHES [mm].

DWG TITLE PEWGK1012

CAD FILE 080117

SCALE N/A

SIZE A

CAGE CODE 53919

9999

PASTERNACK®
THE ENGINEER'S RF SOURCE
Pasternack Enterprises, Inc.
P.O. Box 16759 | Irvine | CA | 92623
Phone: (949) 261-1920 | **Fax:** (949) 261-7451
Website: www.pasternack.com | **E-Mail:** sales@pasternack.com

© 2017 Pasternack Enterprises All Rights Reserved