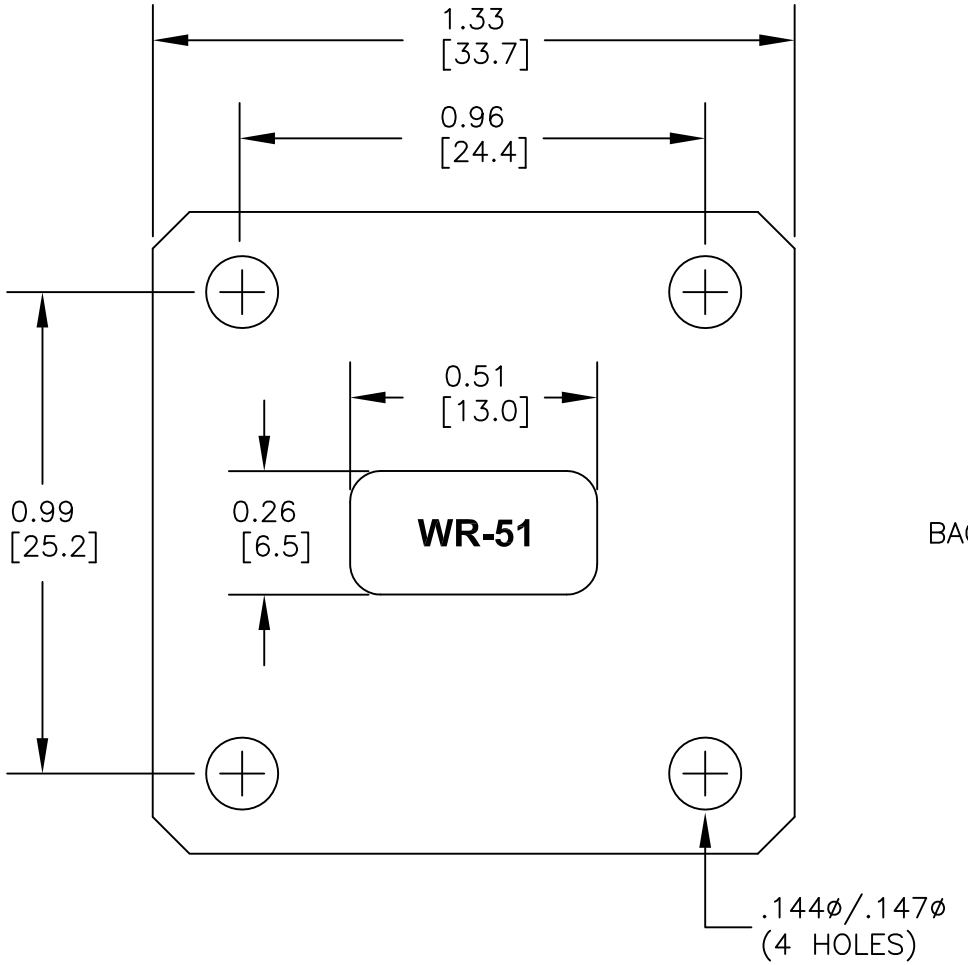

BACK VIEW

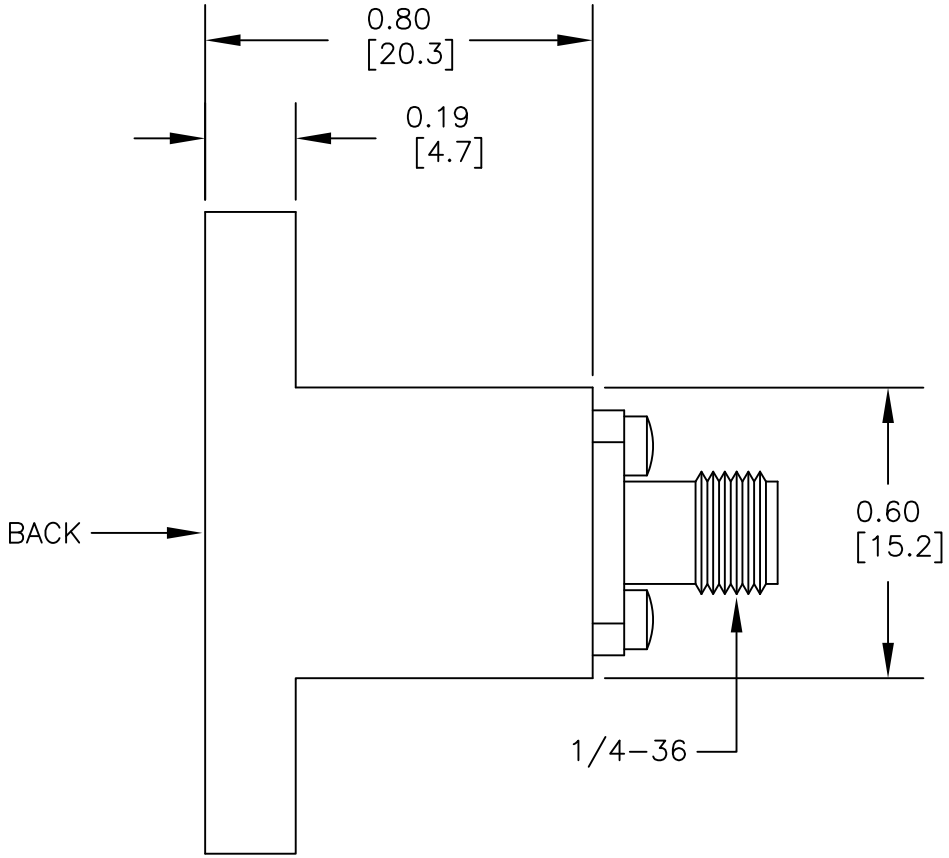

PASTERNACK®
Pasternack Enterprises, Inc.
P.O. Box 16759 | Irvine | CA | 92623
Phone: (949) 261-1920 | **Fax:** (949) 261-7451
Website: www.pasternack.com | **E-Mail:** sales@pasternack.com

DWG TITLE	DES.				
PE9845	WAVEGUIDE TO SMA TYPE FEMALE FREQUENCY RANGE: 15.00 - 22.00 GHz				
REV. A	FSCM NO. 53919	CAD FILE 101512	SCALE N/A	SIZE A	2233

NOTES:
1. UNLESS OTHERWISE SPECIFIED ALL DIMENSIONS ARE NOMINAL.
2. ALL SPECIFICATIONS ARE SUBJECT TO CHANGE WITHOUT NOTICE AT ANY TIME.
3. DIMENSIONS ARE IN INCHES [mm].