PASTERNACK®
www.pasternack.com

Precision 2.92mm Female to 2.92mm Female Bulkhead Adapter



TECHNICAL DATA SHEET PE9647

Precision 2.92mm Female to 2.92mm Female Bulkhead Adapter

Configuration

Connector 1	2.92mm Female
Impedance 1	50 Ohms
Connector 2	2.92mm Female
Impedance 2	50 Ohms
Adapter Design	Precision
Body Style	Straight
Mount Method	Bulkhead

Electrical Specifications

Frequency Range, GHz	DC to 40
Maximum VSWR	1.25:1
Maximum Insertion Loss, dB	0.31

Mechanical Specifications

Temperature

Operating Range,deg C	-55 to +100

Size

Length, in [mm]	0.875 [22.23]
Width/Dia., in [mm]	0.375 [9.53]

Connector 1

Type	2.92mm Female
Mating Cycles	500
Inner Conductor Material and Plating	Beryllium Copper, Gold
Inner Conductor Plating Specification	MIL-G-45204, Type II, Class 1
Body Material and Plating	Passivated Stainless Steel
Body Plating Specification	ASTM A380
Dielectric Type	PPO

Connector 2

Type	2.92mm Female
Mating Cycles	500
Inner Conductor Material and Plating	Beryllium Copper, Gold
Inner Conductor Plating Specification	MIL-G-45204, Type II, Class 1
Body Material and Plating	Passivated Stainless Steel
Body Plating Specification	ASTM A380
Dielectric Type	PPO

Click the following link (or enter part number in “SEARCH” on website) to obtain additional part information including price, inventory and certifications: Precision 2.92mm Female to 2.92mm Female Bulkhead Adapter PE9647

The information contained in this document is accurate to the best of our knowledge and representative of the part described herein. It may be necessary to make modifications to the part and/or the documentation of the part, in order to implement improvements. Pasternack reserves the right to make such changes as required. Unless otherwise stated, all specifications are nominal.

Pasternack Enterprises, Inc. • P.O. Box 16759, Irvine, CA 92623
Phone: (866) 727-8376 or (949) 261-1920 • **Fax:** (949) 261-7451
Sales@Pasternack.com • Techsupport@Pasternack.com

ISO 9001 : 2008 Registered

© 2013 Pasternack Enterprises All Rights Reserved

PASTERNACK®
www.pasternack.com

Precision 2.92mm Female to 2.92mm Female Bulkhead Adapter



TECHNICAL DATA SHEET PE9647

Compliance Certifications (visit www.Pasternack.com for current document)

RoHS Compliant	Yes

Plotted and Other Data

Notes:	Values at 25 °C, sea level

URL: http://www.pasternack.com/2.92mm-female-2.92mm-female-straight-adapter-pe9647-p.aspx

Precision 2.92mm Female to 2.92mm Female Bulkhead Adapter from Pasternack Enterprises has same day shipment for domestic and International orders. Our RF, microwave and fiber optic products maintain a 99% availability and are part of the broadest selection in the industry.

The information contained in this document is accurate to the best of our knowledge and representative of the part described herein. It may be necessary to make modifications to the part and/or the documentation of the part, in order to implement improvements. Pasternack reserves the right to make such changes as required. Unless otherwise stated, all specifications are nominal.

Pasternack Enterprises, Inc. • P.O. Box 16759, Irvine, CA 92623
Phone: (866) 727-8376 or (949) 261-1920 • **Fax:** (949) 261-7451
Sales@Pasternack.com • Techsupport@Pasternack.com

ISO 9001 : 2008 Registered

© 2013 Pasternack Enterprises All Rights Reserved

PE9647 CAD Drawing

Precision 2.92mm Female to 2.92mm Female Bulkhead Adapter

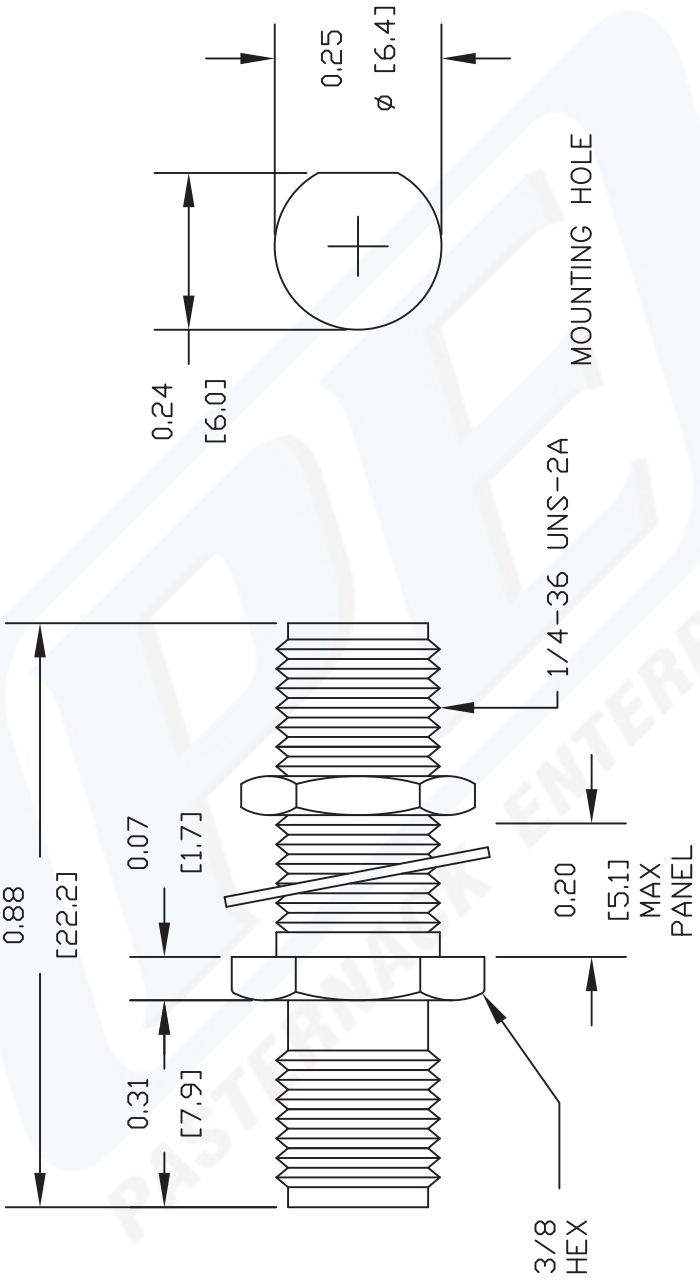

NOTES:
1. UNLESS OTHERWISE SPECIFIED ALL DIMENSIONS ARE NOMINAL.
2. ALL SPECIFICATIONS ARE SUBJECT TO CHANGE WITHOUT NOTICE AT ANY TIME.
3. DIMENSIONS ARE IN INCHES [mm].

DWG TITLE **PE9647**

REV. A | FSCM NO. 53919 | CAD FILE 060811 | SCALE N/A | SIZE A | 2231

PASTERNACK ENTERPRISES, INC.
P.O BOX 16759, IRVINE, CA 92623
PHONE (949) 261-1920 FAX (949) 261-7451
WEB ADDRESS: www.pasternack.com
E-MAIL ADDRESS: sales@pasternack.com
COAXIAL & FIBER OPTICS
PASTERNACK ENTERPRISES®
ESTABLISHED 1972

© 2012 Pasternack Enterprises All Rights Reserved