Peregrine Semiconductor

Product Specification

PE9601

2200 MHz UltraCMOS™ Integer-N PLL for Rad Hard Applications

Features

- 2200 MHz operation
- 10/11 prescaler
- Internal phase detector with charge pump
- Serial, parallel or hardwired programmable
- Low power – 25 mA at 3 V
- Targeted at Q3236 PLL replacement
- 100 Krad total dose
- 44-lead CQFJ

Product Description

Peregrine's PE9601 is a high performance integer-N PLL capable of frequency synthesis up to 2200 MHz. The device is designed for superior phase noise performance while providing an order of magnitude reduction in current consumption, when compared with existing commercial space PLLs.

The PE9601 features a 10/11 dual modulus prescaler, counters and a phase comparator as shown in Figure 1. Counter values are programmable through either a serial or parallel interface and can also be directly hard wired.

The PE9601 is optimized for commercial space applications. Single Event Latch up (SEL) is physically impossible and Single Event Upset (SEU) is better than 10^{-9} errors per bit/ day. Fabricated in Peregrine's UltraCMOS™ process technology, the PE9601 offers excellent RF performance and intrinsic radiation tolerance.

Figure 2. Package Type

44-lead CQFJ

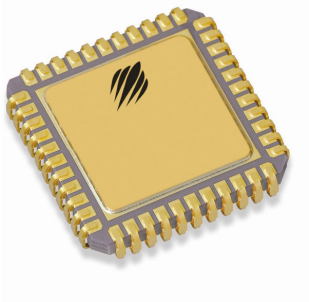

Figure 1. Block Diagram

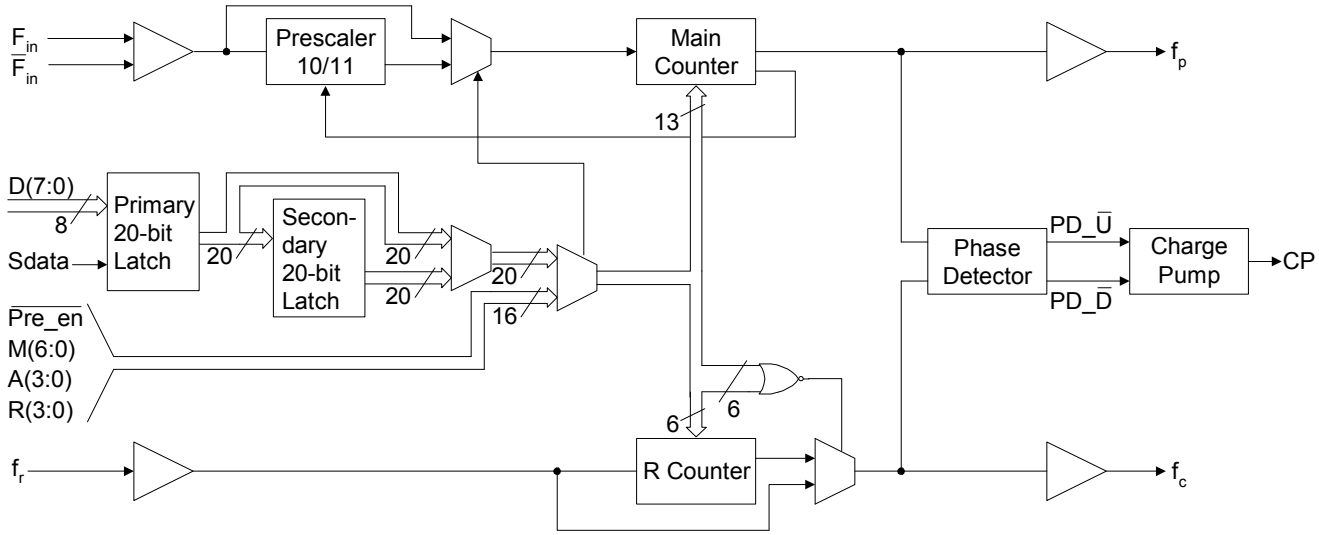

©2010 Peregrine Semiconductor Corp. All rights reserved.

Figure 3. Pin Configuration

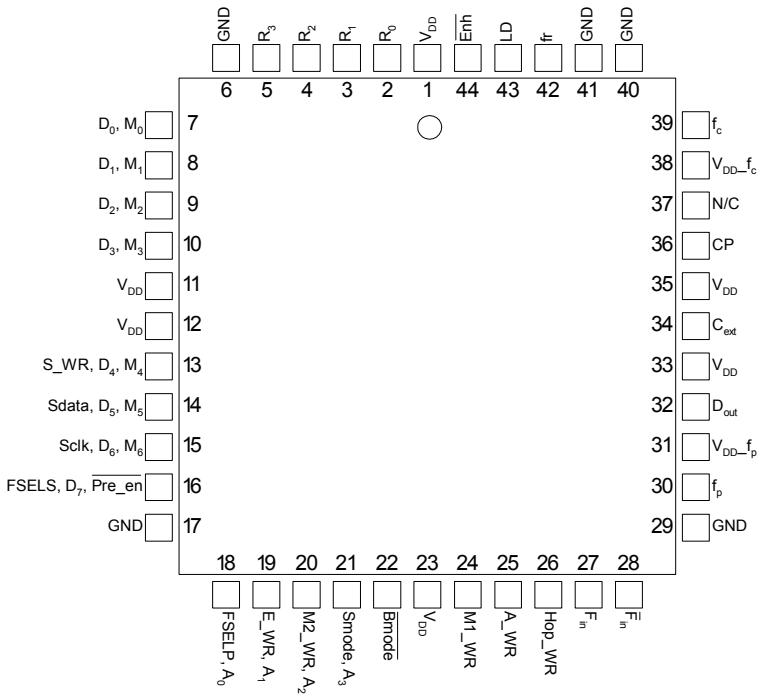

Table 1. Pin Descriptions

Pin No.	Pin Name	Interface Mode	Type	Description
1	V_{DD}	ALL	(Note 1)	Power supply input. Input may range from 2.85 V to 3.15 V. Bypassing recommended.
2	R_0	Direct	Input	R Counter bit0 (LSB).
3	R_1	Direct	Input	R Counter bit1.
4	R_2	Direct	Input	R Counter bit2.
5	R_3	Direct	Input	R Counter bit3.
6	GND	ALL	(Note 1)	Ground.
7	D_0	Parallel	Input	Parallel data bus bit0 (LSB).
	M_0	Direct	Input	M Counter bit0 (LSB).
8	D_1	Parallel	Input	Parallel data bus bit1.
	M_1	Direct	Input	M Counter bit1.
9	D_2	Parallel	Input	Parallel data bus bit2.
	M_2	Direct	Input	M Counter bit2.
10	D_3	Parallel	Input	Parallel data bus bit3.
	M_3	Direct	Input	M Counter bit3.
11	V_{DD}	ALL	(Note 1)	Same as pin 1.
12	V_{DD}	ALL	(Note 1)	Same as pin 1.

©2010 Peregrine Semiconductor Corp. All rights reserved.

Table 1. Pin Descriptions (continued)

Pin No.	Pin Name	Interface Mode	Type	Description
13	S_WR	Serial	Input	Serial load enable input. While S_WR is "low", Sdata can be serially clocked. Primary register data are transferred to the secondary register on S_WR or Hop_WR rising edge.
	D_4	Parallel	Input	Parallel data bus bit4
	M_4	Direct	Input	M Counter bit4
14	Sdata	Serial	Input	Binary serial data input. Input data entered MSB first.
	D_5	Parallel	Input	Parallel data bus bit5.
	M_5	Direct	Input	M Counter bit5.
15	Sclk	Serial	Input	Serial clock input. Sdata is clocked serially into the 20-bit primary register (E_WR "low") or the 8-bit enhancement register (E_WR "high") on the rising edge of Sclk.
	D_6	Parallel	Input	Parallel data bus bit6.
	M_6	Direct	Input	M Counter bit6.
16	FSELS	Serial	Input	Selects contents of primary register (FSELS=1) or secondary register (FSELS=0) for programming of internal counters while in Serial Interface Mode.
	D_7	Parallel	Input	Parallel data bus bit7 (MSB).
	$\overline{\text{Pre_en}}$	Direct	Input	Prescaler enable, active "low". When "high", F_{in} bypasses the prescaler.
17	GND	ALL		Ground.
18	FSELP	Parallel	Input	Selects contents of primary register (FSELP=1) or secondary register (FSELP=0) for programming of internal counters while in Parallel Interface Mode.
	A_0	Direct	Input	A Counter bit0 (LSB).
19	E_WR	Serial	Input	Enhancement register write enable. While E_WR is "high", Sdata can be serially clocked into the enhancement register on the rising edge of Sclk.
		Parallel	Input	Enhancement register write. D[7:0] are latched into the enhancement register on the rising edge of E_WR.
	A_1	Direct	Input	A Counter bit1.
20	M2_WR	Parallel	Input	M2 write. D[3:0] are latched into the primary register (R[5:4], M[8:7]) on the rising edge of M2_WR.
	A_2	Direct	Input	A Counter bit2.
21	Smode	Serial, Parallel	Input	Selects serial bus interface mode ($\overline{\text{Bmode}}$=0, Smode=1) or Parallel Interface Mode ($\overline{\text{Bmode}}$=0, Smode=0).
	A_3	Direct	Input	A Counter bit3 (MSB).
22	$\overline{\text{Bmode}}$	ALL	Input	Selects direct interface mode ($\overline{\text{Bmode}}$=1).
23	V_{DD}	ALL	(Note 1)	Same as pin 1.
24	M1_WR	Parallel	Input	M1 write. D[7:0] are latched into the primary register ($\overline{\text{Pre_en}}$, M[6:0]) on the rising edge of M1_WR.
25	A_WR	Parallel	Input	A write. D[7:0] are latched into the primary register (R[3:0], A[3:0]) on the rising edge of A_WR.
26	Hop_WR	Serial, Parallel	Input	Hop write. The contents of the primary register are latched into the secondary register on the rising edge of Hop_WR.
27	F_{in}	ALL	Input	Prescaler input from the VCO. Input voltage = 223 mV RMS for guaranteed operation.
28	$\overline{F_{in}}$	ALL	Input	Prescaler complementary input. A 22pF bypass capacitor should be placed as close as possible to this pin and be connected in series with a 50 Ω resistor to ground.
29	GND	ALL		Ground.

©2010 Peregrine Semiconductor Corp. All rights reserved.

Table 1. Pin Descriptions (continued)

Pin No.	Pin Name	Interface Mode	Type	Description
30	f_p	ALL	Output	Monitor pin for main divider output. Switching activity can be disabled through enhancement register programming or by floating or grounding V_{DD} pin 31.
31	V_{DD}-f_p	ALL	(Note 2)	V_{DD} for f_p.
32	Dout	Serial, Parallel	Output	Data Out. The MSEL signal and the raw prescaler output are available on Dout through enhancement register programming.
33	V_{DD}	ALL	(Note 1)	Same as pin 1.
34	Cext	ALL	Output	Logical "OR" of PD_$\overline{U}$ and PD_$\overline{D}$ terminated through an on chip, 2 kW series resistor. Connecting Cext to an external capacitor will low pass filter the input to the inverting amplifier used for driving LD.
35	V_{DD}	ALL	(Note 1)	Same as pin 1.
36	CP	ALL	Output	Charge pump current is sourced for "up" when f_c leads f_p and sinked for "down" when f_c lags f_p.
37	NC	ALL	(Note 4)	No connection.
38	V_{DD}-f_c	ALL	(Note 2)	V_{DD} for f_c.
39	f_c	ALL	Output	Monitor pin for reference divider output. Switching activity can be disabled through enhancement register programming or by floating or grounding V_{DD} pin 38.
40	GND	ALL		Ground.
41	GND	ALL		Ground.
42	f_r	ALL	Input	Reference frequency input. See Figure 4.
43	LD	ALL	Output, OD	Lock detect and open drain logical inversion of Cext. When the loop is in lock, LD is high impedance, otherwise LD is a logic low ("0").
44	$\overline{Enh}$	Serial, Parallel	Input	Enhancement mode. When asserted low ("0"), enhancement register bits are functional.

Note 1: V_{DD} pins 1, 11, 12, 23, 33, and 35 are connected by diodes and must be supplied with the same positive voltage level.

Note 2: V_{DD} pins 31 and 38 are used to enable test modes and should be left floating.

Note 3: All digital input pins have 70k Ω pull-down resistors to ground.

Note 4: No connect pins can be left open or floating.

Figure 4. Looking into the device PIN 42 - fr

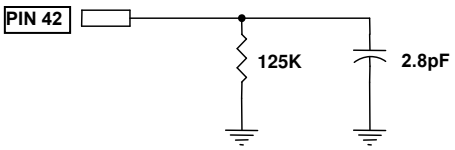

©2010 Peregrine Semiconductor Corp. All rights reserved.

Table 2. Absolute Maximum Ratings

Symbol	Parameter/Conditions	Min	Max	Units
V_{DD}	Supply voltage	-0.3	4.0	V
V_I	Voltage on any input	-0.3	V_{DD} + 0.3	V
I_I	DC into any input	-10	+10	mA
I_O	DC into any output	-10	+10	mA
T_{stg}	Storage temperature range	-65	150	°C

Absolute Maximum Ratings are those values listed in the above table. Exceeding these values may cause permanent device damage. Functional operation should be restricted to the limits in the DC Electrical Specifications table. Exposure to absolute maximum ratings for extended periods may affect device reliability.

Table 3. Operating Ratings

Symbol	Parameter/Conditions	Min	Max	Units
V_{DD}	Supply voltage	2.85	3.15	V
T_A	Operating ambient temperature range	-40	85	°C

Table 4. ESD Ratings

Symbol	Parameter/Conditions	Level	Units
V_{ESD}	ESD voltage (Human Body Model) – Note 1	1000	V

Note 1: Periodically sampled, not 100% tested. Tested per MIL-STD-883, M3015 C2

Electrostatic Discharge (ESD) Precautions

When handling this UTSi device, observe the same precautions that you would use with other ESD-sensitive devices. Although this device contains circuitry to protect it from damage due to ESD, precautions should be taken to avoid exceeding the rating specified in Table 4.

Latch-Up Avoidance

Unlike conventional CMOS devices, UltraCMOS™ devices are immune to latch-up.

©2010 Peregrine Semiconductor Corp. All rights reserved.

Table 5. DC Characteristics

V_{DD} = 3.0 V, -40° C < T_A < 85° C, unless otherwise specified

Symbol	Parameter	Test Program Name	Conditions	Min	Typ	Max	Units
I_{DD}	Operational supply current; Prescaler enabled 2 GHz center frequency with 10 MHz reference input.	IDD_T_oper_at_2 GHz	V_{DD} = 2.85 to 3.15 V		24		mA
Digital Inputs: All except f_r, R_0, F_{in}, F_{in}							
V_{IH}	High level input voltage	LEVELS_"xxx"_VIH(V) where "xxx" is name of pin being tested	V_{DD} = 2.85 to 3.15 V	0.7 x V_{DD}			V
V_{IL}	Low level input voltage	LEVELS_"xxx"_VIL(V) where "xxx" is name of pin being tested	V_{DD} = 2.85 to 3.15 V			0.3 x V_{DD}	V
I_{IH}	High level input current (Pull-down resistor on input)	IIH_"xxx"_(A) where "xxx" is name of pin being tested	V_{IH} = V_{DD} = 3.15 V			+100	µA
I_{IL}	Low level input current	IIL_"xxx"_(A) where "xxx" is name of pin being tested	V_{IL} = 0, V_{DD} = 3.15 V	-1			µA
Reference Divider input: f_r							
I_{IHR}	High level input current	IIH_FR_(A)	V_{IH} = V_{DD} = 3.15 V			+50	µA
I_{ILR}	Low level input current	IIL_FR_(A)	V_{IL} = 0, V_{DD} = 3.15 V	-50			µA
R0 Input (Pull-up Resistor): R_0							
I_{IHR}	High level input current (Pull-down resistor on input)	IIH_R0_(A)	V_{IH} = V_{DD} = 3.15 V			+100	µA
I_{ILR}	Low level input current	IIL_R0_(A)	V_{IL} = 0, V_{DD} = 3.15 V	-3			µA
Counter and phase detector outputs: f_c, f_p.							
V_{OLD}	Output voltage LOW	LEVELS_"xxx"_VOL(V) where "xxx" is name of pin being tested	I_{out} = 6 mA			0.4	V
V_{OHD}	Output voltage HIGH	LEVELS_"xxx"_VOH(V) where "xxx" is name of pin being tested	I_{out} = -3 mA	V_{DD} - 0.4			V
Lock detect outputs: Cext, LD							
V_{OLC}	Output voltage LOW, Cext	LEVELS_CEXT_VOL(V)	I_{out} = 0.1 mA			0.4	V
V_{OHC}	Output voltage HIGH, Cext	LEVELS_CEXT_VOH(V)	I_{out} = -0.1 mA	V_{DD} - 0.4			V
V_{OLLD}	Output voltage LOW, LD	LEVELS_ LD_VOL(V)	I_{out} = 6 mA			0.4	V
Charge Pump output: CP							
I_{CP} - Source	Drive current	CP_src_at_0.5 VDD (A)	V_{CP} = V_{DD} / 2	-2.6	-2	-1.4	mA
I_{CP} – Sink	Drive current	CP_snk_at_0.5 VDD (A)	V_{CP} = V_{DD} / 2	1.4	2	2.6	mA
I_{CPL}	Leakage current	CP_lkg_PD_DX (A)	1.0 V < V_{CP} < V_{DD} – 1.0 V	-1		1	µA
I_{CP} – Source vs. I_{CP} Sink	Sink vs. source mismatch	CP_srcvsnk_at_0.5 VDD	V_{CP} = V_{DD} / 2, T_A = 25° C			25	%
I_{CP} vs. V_{CP}	Output current magnitude variation vs. voltage	CP_snk_var, CP_src_var	1.0V < V_{CP} < V_{DD} – 1.0 V T_A = 25° C			25	%

©2010 Peregrine Semiconductor Corp. All rights reserved.

Table 6. AC Characteristics

V_{DD} = 3.0 V, -40° C < T_A < 85° C, unless otherwise specified

Symbol	Parameter	Test Program Name	Conditions	Min	Max	Units
Control Interface and Latches (see Figure 5 and Figure 6)						
f_{Clk}	Serial data clock frequency	(Note 1)			10	MHz
t_{ClkH}	Serial clock HIGH time	t_clk_H (s)		30		ns
t_{ClkL}	Serial clock LOW time	t_clk_L (s)		30		ns
t_{DSU}	Sdata set-up time after Sclk rising edge, D[7:0] set-up time to M1_WR, M2_WR, A_WR, E_WR rising edge	t_dsu_"xxx" (s) where "xxx" is name of pin being tested		10		ns
t_{DHLD}	Sdata hold time after Sclk rising edge, D[7:0] hold time to M1_WR, M2_WR, A_WR rising edge	t_dhid_"xxx" (s) where "xxx" is name of pin being tested		10		ns
t_{PW}	S_WR, M1_WR, M2_WR, A_WR, E_WR pulse width	t_pw_"xxx" (s) where "xxx" is name of pin being tested		30		ns
t_{CWR}	Sclk rising edge to S_WR rising edge. S_WR, M1_WR, M2_WR, A_WR falling edge to Hop_WR rising edge	t_cwr_"xxx" (s) where "xxx" is name of pin being tested		30		ns
t_{CE}	Sclk falling edge to E_WR transition	t_ce (s)		30		ns
t_{WRC}	S_WR falling edge to Sclk rising edge. Hop_WR falling edge to S_WR, M1_WR, M2_WR, A_WR rising edge	t_wrc_"xxx" (s) where "xxx" is name of pin being tested		30		ns
t_{EC}	E_WR transition to Sclk rising edge	t_ec (s)		30		ns
Main Divider (Including Prescaler)						
F_{in}	Operating frequency	RF_sens		200	2200	MHz
P_{Fin}	Input level range	RF_sens	External AC coupling	0	5	dBm
Main Divider (Prescaler Bypassed)						
F_{in}	Operating frequency			20	220	MHz
P_{Fin}	Input level range		External AC coupling	-5	5	dBm
Reference Divider						
f_r	Operating frequency	Fc_sens	(Note 3)		100	MHz
P_{fr}	Reference input power (Note 2)	Fc_sens	Single ended input	-2		dBm
Phase Detector						
f_c	Comparison frequency		(Note 3)		20	MHz

Note 1: Fclk is verified during the functional pattern test. Serial programming sections of the functional pattern are clocked at 10 MHz to verify Fclk specification.

Note 2: CMOS logic levels can be used to drive reference input if DC coupled. For sine wave inputs, amplitude needs to be a minimum of 0.5 Vp-p with no maximum level specified.

Note 3: Parameter is guaranteed through characterization only and is not tested.

©2010 Peregrine Semiconductor Corp. All rights reserved.

Functional Description

The *PE9601* consists of a prescaler, counters, a phase detector, a charge pump and control logic. The dual modulus prescaler divides the VCO frequency by either 10 or 11, depending on the value of the modulus select. Counters “R” and “M” divide the reference and prescaler output, respectively, by integer values stored in a 20-bit register. An additional counter (“A”) is used in the modulus select logic. The phase-frequency detector generates up and down frequency control signals, which are implemented as a pulse width modulated current by the charge pump. The control logic includes a selectable chip interface. Data can be written via serial bus, parallel bus, or hardwired direct to the pins. There are also various operational and test modes and lock detect.

Figure 5. Functional Block Diagram

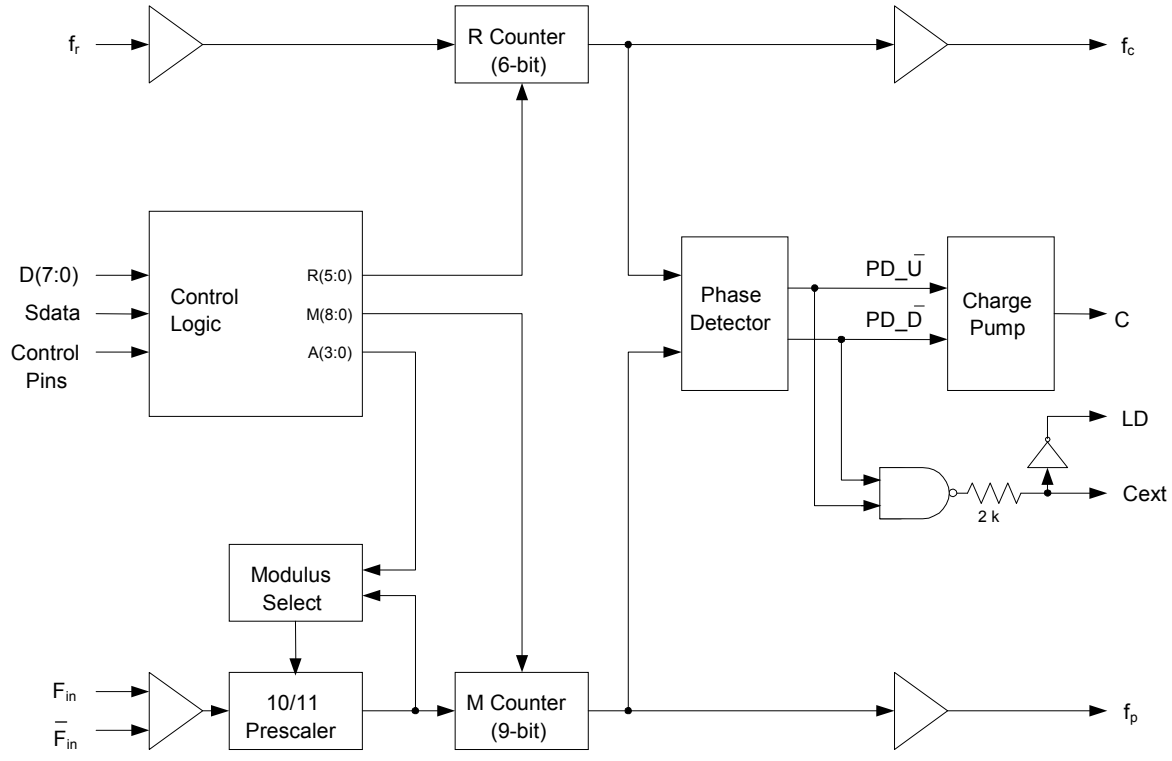

©2010 Peregrine Semiconductor Corp. All rights reserved.

Main Counter Chain

The main counter chain divides the RF input frequency, F_{in}, by an integer derived from the user defined values in the "M" and "A" counters. It is composed of the 10/11 dual modulus prescaler, modulus select logic, and 9 bit M counter. Setting Pre_en "low" enables the 10/11 prescaler. Setting Pre_en "high" allows F_{in} to bypass the prescaler and powers down the prescaler.

The output from the main counter chain, f_p, is related to the VCO frequency, F_{in}, by the following equation:

$$f_p = F_{in} / [10 \times (M + 1) + A] \quad (1)$$
$$\text{where } A \leq M + 1, M \neq 0$$

When the loop is locked, F_{in} is related to the reference frequency, f_r, by the following equation:

$$Fin = [10 \times (M + 1) + A] \times (fr / (R+1)) \quad (2)$$
$$\text{where } A \leq M + 1, M \neq 0$$

A consequence of the upper limit on A is that F_{in} must be greater than or equal to 90 x (f_r / (R+1)) to obtain contiguous channels. Programming the M Counter with the minimum value of "1" will result in a minimum M Counter divide ratio of "2".

In Direct Interface Mode, main counter inputs M_7 and M_8 are internally forced low.

Reference Counter

The reference counter chain divides the reference frequency, f_r, down to the phase detector comparison frequency, f_c.

The output frequency of the 6 bit R Counter is related to the reference frequency by the following equation:

$$f_c = f_r / (R + 1) \quad (3)$$
$$\text{where } R \geq 0$$

Note that programming R equal to "0" will pass the reference frequency, f_r, directly to the phase detector.

In Direct Interface Mode, R Counter inputs R_4 and R_5 are internally forced low ("0").

Register Programming

Parallel Interface Mode

Parallel Interface Mode is selected by setting the Bmode input "low" and the Smode input "low".

Parallel input data, D[7:0], are latched in a parallel fashion into one of three, 8-bit primary register sections on the rising edge of M1_WR, M2_WR, or A_WR per the mapping shown in Table 7 on page 10. The contents of the primary register are transferred into a secondary register on the rising edge of Hop_WR according to the timing diagram shown in Figure 6. Data are transferred to the counters as shown in Table 7 on page 10.

The secondary register acts as a buffer to allow rapid changes to the VCO frequency. This double buffering for "ping-pong" counter control is programmed via the FSELP input. When FSELP is "high", the primary register contents set the counter inputs. When FSELP is "low", the secondary register contents are utilized.

The FSELP input is synchronized with the loading of the counters in order to minimize glitches in the "ping-pong" case. Due to this attribute, applications using a single register should use the secondary register (i.e. tie FSELP "low") to avoid problems with the prescaler powering up in the disabled state.

Parallel input data, D[7:0], are latched into the enhancement register on the rising edge of E_WR according to the timing diagram shown in Figure 6. This data provides control bits as shown in Table 8 on page 10 with bit functionality enabled by asserting the Enh input "low".

Direct Interface Mode

Direct Interface Mode is selected by setting the Bmode input "high".

Counter control bits are set directly at the pins as shown in Table 7. In Direct Interface Mode, main counter inputs M_7 and M_8, and R Counter inputs R_4 and R_5 are internally forced low ("0")

Serial Interface Mode

Serial Interface Mode is selected by setting the Bmode input "low" and the Smode input "high".

While the E_WR input is "low" and the S_WR input is "low", serial input data (Sdata input), B_0 to B_{19}, are clocked serially into the primary register on the rising edge of Sclk, MSB (B_0) first. The contents from the primary register are transferred into the secondary register on the rising edge of either S_WR or Hop_WR according to the timing diagram shown in Figure 6 and Figure 7. Data are transferred to the counters as shown in Table 7 on page 10.

©2010 Peregrine Semiconductor Corp. All rights reserved.

The double buffering provided by the primary and secondary registers allows for “ping-pong” counter control using the FSELS input. When FSELS is “high”, the primary register contents set the counter inputs. When FSELS is “low”, the secondary register contents are utilized.

While the E_WR input is “high” and the S_WR input is “low”, serial input data (Sdata input), B_0 to B_7, are clocked serially into the enhancement register on the rising edge of Sclk, MSB (B_0) first.

The enhancement register is double buffered to prevent inadvertent control changes during serial loading, with buffer capture of the serially entered data performed on the falling edge of E_WR according to the timing diagram shown in Figure 7. After the falling edge of E_WR, the data provide control bits as shown in Table 8 with bit functionality enabled by asserting the Enh input “low”.

Table 7. Primary Register Programming

Interface Mode	$\overline{\text{Enh}}$	$\overline{\text{Bmode}}$	$\overline{\text{Smode}}$	R_5	R_4	M_8	M_7	Pre_en	M_6	M_5	M_4	M_3	M_2	M_1	M_0	R_3	R_2	R_1	R_0	A_3	A_2	A_1	A_0
Parallel	1	0	0	M2_WR rising edge load				M1_WR rising edge load								A_WR rising edge load							
				D_3	D_2	D_1	D_0	D_7	D_6	D_5	D_4	D_3	D_2	D_1	D_0	D_7	D_6	D_5	D_4	D_3	D_2	D_1	D_0
Serial*	1	0	1	B_0	B_1	B_2	B_3	B_4	B_5	B_6	B_7	B_8	B_9	B_{10}	B_{11}	B_{12}	B_{13}	B_{14}	B_{15}	B_{16}	B_{17}	B_{18}	B_{19}
Direct	1	1	X	0	0	0	0	$\overline{\text{Pre_en}}$	M_6	M_5	M_4	M_3	M_2	M_1	M_0	R_3	R_2	R_1	R_0	A_3	A_2	A_1	A_0

*Serial data clocked serially on Sclk rising edge while E_WR “low” and captured in secondary register on S_WR rising edge.



Table 8. Enhancement Register Programming

Interface Mode	$\overline{\text{Enh}}$	$\overline{\text{Bmode}}$	$\overline{\text{Smode}}$	Reserved	Reserved	Reserved	Power down	Counter load	MSEL output	Prescaler output	f_c, f_p OE
Parallel	0	X	0	E_WR rising edge load							
				D_7	D_6	D_5	D_4	D_3	D_2	D_1	D_0
Serial*	0	X	1	B_0	B_1	B_2	B_3	B_4	B_5	B_6	B_7

*Serial data clocked serially on Sclk rising edge while E_WR “high” and captured in the double buffer on E_WR falling edge.



©2010 Peregrine Semiconductor Corp. All rights reserved.

Figure 6. Parallel Interface Mode Timing Diagram

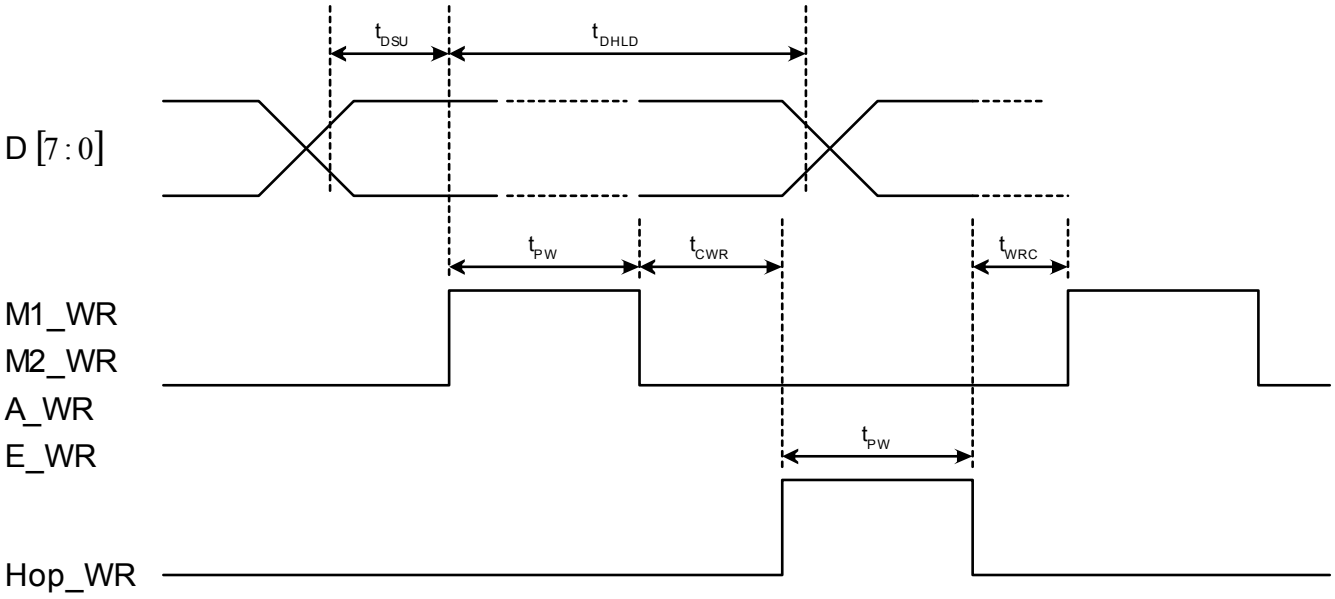

Figure 7. Serial Interface Mode Timing Diagram

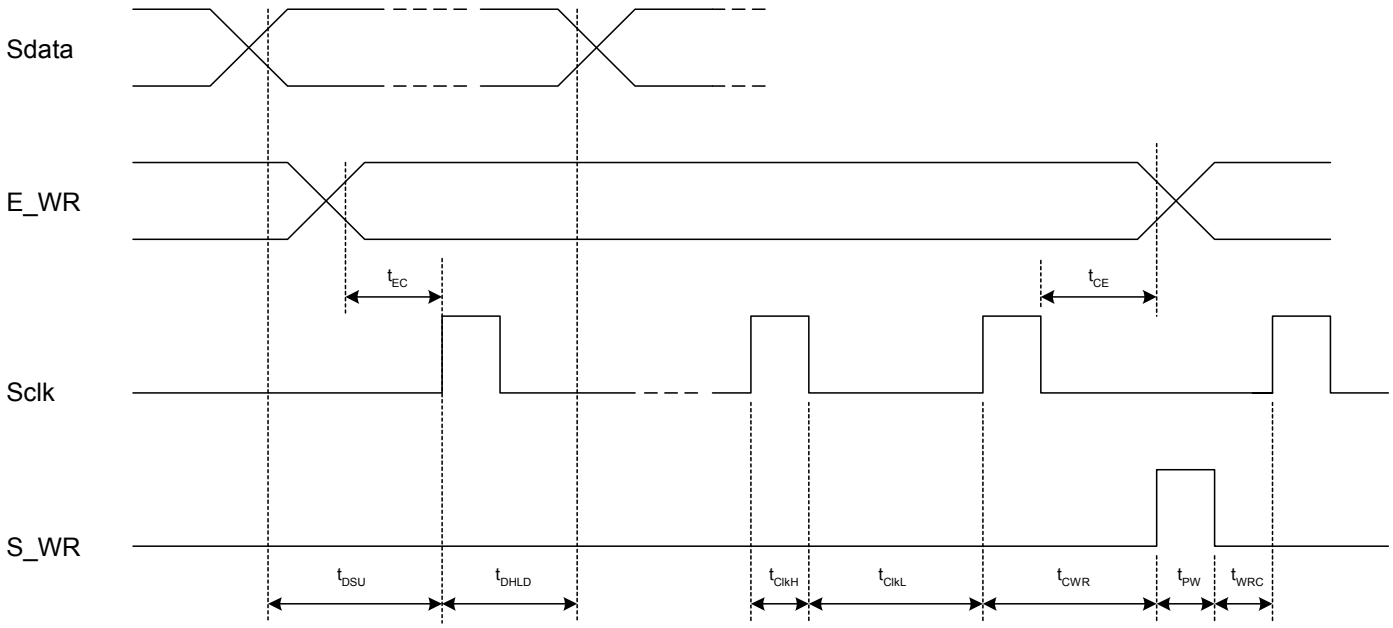

©2010 Peregrine Semiconductor Corp. All rights reserved.

Enhancement Register

The functions of the enhancement register bits are shown below with all bits active “high”.

Table 9. Enhancement Register Bit Functionality

Bit Function		Description
Bit 0	Reserved**	
Bit 1	Reserved**	
Bit 2	Reserved**	
Bit 3	Power down	Power down of all functions except programming interface.
Bit 4	Counter load	Immediate and continuous load of counter programming as directed by the $\overline{\text{Bmode}}$ and Smode inputs.
Bit 5	MSEL output	Drives the internal dual modulus prescaler modulus select (MSEL) onto the Dout output.
Bit 6	Prescaler output	Drives the raw internal prescaler output (fmain) onto the Dout output.
Bit 7	f_p, f_c $\overline{\text{OE}}$	f_p, f_c outputs disabled.

** Program to 0

Phase Detector

The phase detector is triggered by rising edges from the main Counter (f_p) and the reference counter (f_c). It has two outputs, namely PD_$\overline{U}$, and PD_$\overline{D}$. If the divided VCO leads the divided reference in phase or frequency (f_p leads f_c), PD_$\overline{D}$ pulses “high”. If the divided reference leads the divided VCO in phase or frequency (f_r leads f_p), PD_$\overline{U}$ pulses “high”. The width of either pulse is directly proportional to phase offset between the two input signals, f_p and f_c.

The signals from the phase detector couple directly to a charge pump. PD_$\overline{U}$ controls a current source at pin CP with constant amplitude and pulse duration approximately the same as PD_$\overline{U}$. PD_$\overline{D}$ similarly drives a current sink at pin CP.

The current pulses from pin CP are low pass filtered externally and then connected to the VCO tune voltage. PD_$\overline{U}$ pulses result in a current source, which increases the VCO frequency and PD_$\overline{D}$ results in a current sink, which decreases VCO frequency.

A lock detect output, LD is also provided, via the pin Cext. Cext is the logical “OR” of PD_$\overline{U}$ and PD_$\overline{D}$ waveforms, which is driven through a series 2 k ohm resistor. Connecting Cext to an external shunt capacitor provides integration. Cext also drives the input of an internal inverting comparator with an open drain output. Thus LD is an “NOR” function of PD_$\overline{U}$ and PD_$\overline{D}$.

©2010 Peregrine Semiconductor Corp. All rights reserved.

Figure 8. Package Drawing

44-lead CQFJ

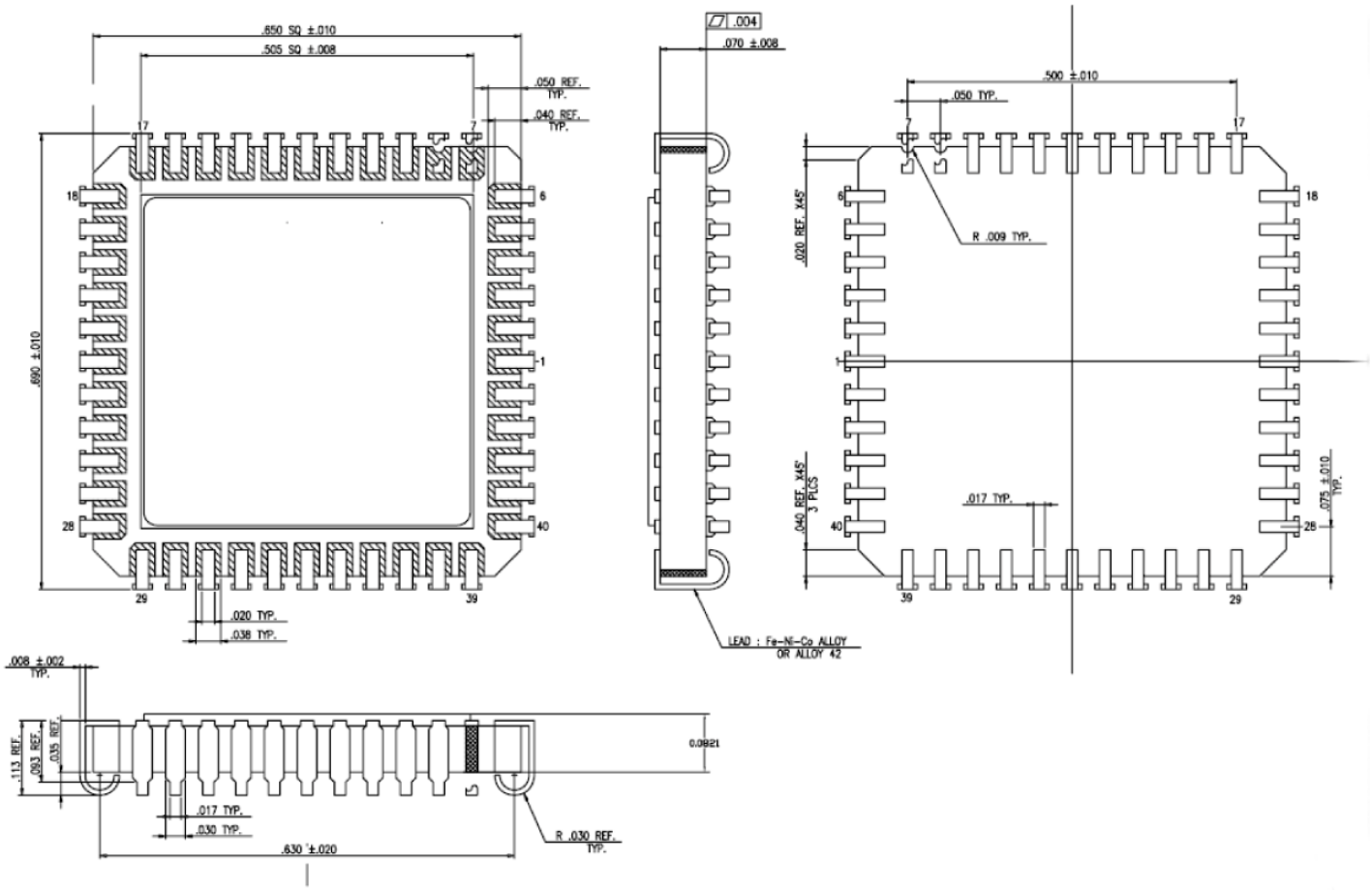

All dimensions are in mils

Table 10. Ordering Information

Order Code	Part Marking	Description	Package	Shipping Method
9601-01	PE9601	Engineering Samples	44-pin CQFJ	40 units / Tray
9601-11	PE9601	Flight Units	44-pin CQFJ	40 units / Tray
9601-00	PE9601EK		Evaluation Board	1 / Box

©2010 Peregrine Semiconductor Corp. All rights reserved.

Sales Offices

The Americas

Peregrine Semiconductor Corporation
9380 Carroll Park Drive
San Diego, CA 92121
Tel: 858-731-9400
Fax: 858-731-9499

Europe

Peregrine Semiconductor Europe
Bâtiment Maine
13-15 rue des Quatre Vents
F-92380 Garches, France
Tel: +33-1-4741-9173
Fax : +33-1-4741-9173

High-Reliability and Defense Products

Americas
San Diego, CA, USA
Phone: 858-731-9475
Fax: 848-731-9499

Europe/Asia-Pacific
Parc Cezanne 1
380 Avenue Archimède, Parc de la Duranne
13857 Aix-En-Provence Cedex 3, France
Phone: +33-4-4239-3361
Fax: +33-4-4239-7227

Peregrine Semiconductor, Asia Pacific (APAC)
Shanghai, 200040, P.R. China
Tel: +86-21-5836-8276
Fax: +86-21-5836-7652

Peregrine Semiconductor, Korea
#B-2607, Kolon Tripolis, 210
Geumgok-dong, Bundang-gu, Seongnam-si
Gyeonggi-do, 463-943 South Korea
Tel: +82-31-728-3939
Fax: +82-31-728-3940

Peregrine Semiconductor K.K., Japan
601 Yaesu Kyodo Building
2-5-9 Yaesu, Chuo-ku
Tokyo 104-0028 Japan
Tel: +81-3-3527 -9841
Fax: +81-3-3527-9848

For a list of representatives in your area, please refer to our Web site at: ***www.psemi.com***

Data Sheet Identification

Advance Information

The product is in a formative or design stage. The data sheet contains design target specifications for product development. Specifications and features may change in any manner without notice.

Preliminary Specification

The data sheet contains preliminary data. Additional data may be added at a later date. Peregrine reserves the right to change specifications at any time without notice in order to supply the best possible product.

Product Specification

The data sheet contains final data. In the event Peregrine decides to change the specifications, Peregrine will notify customers of the intended changes by issuing a CNF (Customer Notification Form).

The information in this data sheet is believed to be reliable. However, Peregrine assumes no liability for the use of this information. Use shall be entirely at the user's own risk.

No patent rights or licenses to any circuits described in this data sheet are implied or granted to any third party.

Peregrine's products are not designed or intended for use in devices or systems intended for surgical implant, or in other applications intended to support or sustain life, or in any application in which the failure of the Peregrine product could create a situation in which personal injury or death might occur. Peregrine assumes no liability for damages, including consequential or incidental damages, arising out of the use of its products in such applications.

The Peregrine name, logo, and UTSi are registered trademarks and UltraCMOS, HaRP, MultiSwitch and DuNE are trademarks of Peregrine Semiconductor Corp.

©2010 Peregrine Semiconductor Corp. All rights reserved.