PASTERNACK®
THE ENGINEER'S RF SOURCE



Precision N Female to N Female Adapter

RF Adapters Technical Data Sheet

PE9428

Configuration

- N Female Connector 1
- N Female Connector 2
- 50 Ohms
- Precision Design
- Straight Body Geometry

Features

- Max VSWR of 1.15:1 up to 18 GHz
- Gold over Nickel Plated Beryllium Copper Contact
- Contact Plating per MIL-G-45204

Applications

- General Purpose Test
- Precision Test & Measurement

Description

Pasternack's PE9428 precision type N female to type N female adapter is part of our full line of RF components available for same-day shipping. Our type N to type N adapter has a female to female gender configuration in a precision design. PE9428 type N female to type N female adapter operates to 18 GHz. The Pasternack RF adapter provides excellent VSWR of 1.15:1 maximum.

RF adapters are often used to enable connections between two connector types that would otherwise not mate. Certain adapter configurations can also be used to protect connectors on expensive equipment where the number of connect/disconnect cycles is high. An RF, microwave or millimeter wave adapter is connected to the equipment, and the commonly changed connection is made with the adapter which can be easily replaced when it wears out after high usage; such adapters are referred to as connector savers. Pasternack also offers bulkhead, panel mount, hermetically sealed, reverse polarity, and isolated ground adapter varieties to serve all of your RF, microwave and millimeter wave needs.

Electrical Specifications

Description	Minimum	Typical	Maximum	Units
Frequency Range	DC		18	GHz
VSWR			1.15:1	
Insertion Loss			0.22	dB

Electrical Specification Notes:
Values at 25°C, sea level.
Insertion Loss (dB) = 0.05*sqrt(fGHz).

Mechanical Specifications

Size

Length	1.75 in [44.45 mm]
Width	0.625 in [15.88 mm]
Weight	0.109 lbs [49.44 g]

Click the following link (or enter part number in "SEARCH" on website) to obtain additional part information including price, inventory and certifications: Precision N Female to N Female Adapter PE9428

Pasternack Enterprises, Inc. • P.O. Box 16759, Irvine, CA 92623
Phone: (866) 727-8376 or (949) 261-1920 • **Fax:** (949) 261-7451
Sales@Pasternack.com • Techsupport@Pasternack.com

ISO 9001 : 2008 Registered

© 2016 Pasternack Enterprises All Rights Reserved

PASTERNACK®
THE ENGINEER'S RF SOURCE



Precision N Female to N Female Adapter

RF Adapters Technical Data Sheet PE9428

Description	Connector 1	Connector 2
Type	N Female	N Female
Polarity	Standard	Standard
Mating Cycles	500	500

Material Specifications

	Connector 1		Connector 2	
Description	Material	Plating	Material	Plating
Type	N Female		N Female	
Contact	Beryllium Copper	Gold over Nickel MIL-G-45204	Beryllium Copper	Gold over Nickel MIL-G-45204
Insulation	Oxide-Noryl		Oxide-Noryl	
Outer Conductor	Passivated Stainless Steel	ASTM A380	Passivated Stainless Steel	ASTM A380

Environmental Specifications

Temperature

Operating Range	-55 to +100 deg C
Vibration	MIL-STD-202, Method 204, Cond. D (20G's)
Salt Spray	MIL-STD-202, Method 101, Cond. B, 5% salt solution

Compliance Certifications (see product page for current document)

Plotted and Other Data

Notes:

Click the following link (or enter part number in "SEARCH" on website) to obtain additional part information including price, inventory and certifications: Precision N Female to N Female Adapter PE9428

Pasternack Enterprises, Inc. • P.O. Box 16759, Irvine, CA 92623
Phone: (866) 727-8376 or (949) 261-1920 • **Fax:** (949) 261-7451
Sales@Pasternack.com • Techsupport@Pasternack.com

ISO 9001 : 2008 Registered

© 2016 Pasternack Enterprises All Rights Reserved

PASTERNACK®
THE ENGINEER'S RF SOURCE



Precision N Female to N Female Adapter

RF Adapters Technical Data Sheet PE9428

Precision N Female to N Female Adapter from Pasternack Enterprises has same day shipment for domestic and International orders. Our RF, microwave and millimeter wave products maintain a 99% availability and are part of the broadest selection in the industry.

Click the following link (or enter part number in "SEARCH" on website) to obtain additional part information including price, inventory and certifications: Precision N Female to N Female Adapter PE9428

URL: https://www.pasternack.com/n-female-n-female-straight-adapter-pe9428-p.aspx

The information contained in this document is accurate to the best of our knowledge and representative of the part described herein. It may be necessary to make modifications to the part and/or the documentation of the part, in order to implement improvements. Pasternack reserves the right to make such changes as required. Unless otherwise stated, all specifications are nominal. Pasternack does not make any representation or warranty regarding the suitability of the part described herein for any particular purpose, and Pasternack does not assume any liability arising out of the use of any part or documentation.

Pasternack Enterprises, Inc. • P.O. Box 16759, Irvine, CA 92623
Phone: (866) 727-8376 or (949) 261-1920 • **Fax:** (949) 261-7451
Sales@Pasternack.com • Techsupport@Pasternack.com

ISO 9001 : 2008 Registered

© 2016 Pasternack Enterprises All Rights Reserved

PE9428 CAD Drawing

Precision N Female to N Female Adapter

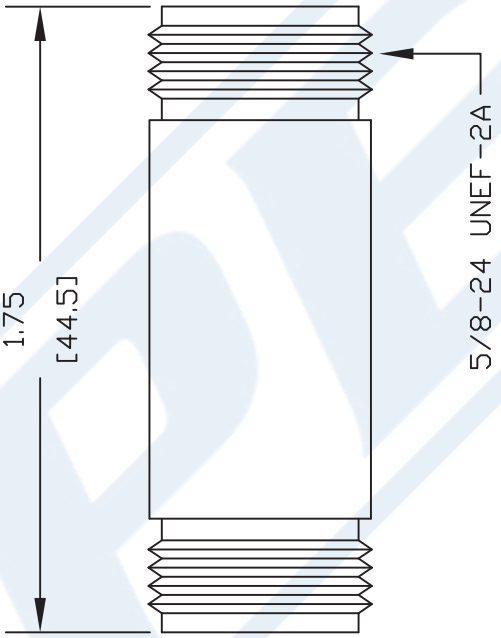

NOTES:
1. UNLESS OTHERWISE SPECIFIED ALL DIMENSIONS ARE NOMINAL.
2. ALL SPECIFICATIONS ARE SUBJECT TO CHANGE WITHOUT NOTICE AT ANY TIME.
3. DIMENSIONS ARE IN INCHES [mm].

DWG TITLE **PE9428**

REV. B	FSCM NO. 53919	CAD FILE 020310	SCALE N/A	SIZE A	127

PASTERNACK®
Pasternack Enterprises, Inc.
P.O. Box 16759 | Irvine | CA | 92623
Phone: (949) 261-1920 | **Fax:** (949) 261-7451
Website: www.pasternack.com | **E-Mail:** sales@pasternack.com

© 2016 Pasternack Enterprises All Rights Reserved