PASTERNACK®
www.pasternack.com

BNC Male to MHV Female Adapter



TECHNICAL DATA SHEET PE9406

BNC Male to MHV Female Adapter

Configuration

Connector 1	BNC Male
Impedance 1	50 Ohms
Connector 2	MHV Female
Impedance 2	50 Ohms
Adapter Design	Standard
Body Style	Straight

Mechanical Specifications

Size

Length, in [mm]	1.35 [34.29]
Width/Dia., in [mm]	0.57 [14.48]

Connector 1

Type	BNC Male
Inner Conductor Material and Plating	Silver
Coupling Nut Material and Plating	Brass, Nickel
Body Material and Plating	Brass, Nickel
Dielectric Type	PTFE

Connector 2

Type	MHV Female
Inner Conductor Material and Plating	Silver
Body Material and Plating	Brass, Nickel
Dielectric Type	PTFE

Compliance Certifications (visit www.Pasternack.com for current document)

RoHS Compliant	Yes

Plotted and Other Data

Notes:	Values at 25 °C, sea level

URL: http://www.pasternack.com/bnc-male-mhv-female-straight-adapter-pe9406-p.aspx

BNC Male to MHV Female Adapter from Pasternack Enterprises has same day shipment for domestic and International orders. Our RF, microwave and fiber optic products maintain a 99% availability and are part of the broadest selection in the industry.

The information contained in this document is accurate to the best of our knowledge and representative of the part described herein. It may be necessary to make modifications to the part and/or the documentation of the part, in order to implement improvements. Pasternack reserves the right to make such changes as required. Unless otherwise stated, all specifications are nominal.

Pasternack Enterprises, Inc. • P.O. Box 16759, Irvine, CA 92623
Phone: (866) 727-8376 or (949) 261-1920 • **Fax:** (949) 261-7451
Sales@Pasternack.com • Techsupport@Pasternack.com

ISO 9001 : 2008 Registered

© 2013 Pasternack Enterprises All Rights Reserved

PE9406 CAD Drawing

BNC Male to MHV Female Adapter

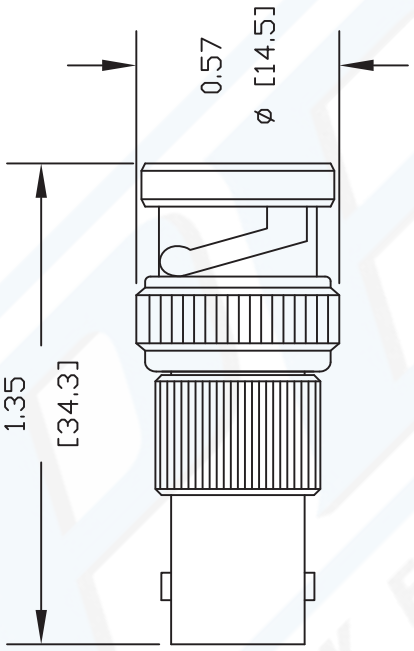

NOTES:
1. UNLESS OTHERWISE SPECIFIED ALL DIMENSIONS ARE NOMINAL.
2. ALL SPECIFICATIONS ARE SUBJECT TO CHANGE WITHOUT NOTICE AT ANY TIME.
3. DIMENSIONS ARE IN INCHES [mm].

DWG TITLE **PE9406**

REV. - | FSCM NO. 53919 | CAD FILE 091902 | SCALE N/A | SIZE A | 127

PASTERNACK ENTERPRISES, INC.
P.O BOX 16759, IRVINE, CA 92623
PHONE (949) 261-1920 FAX (949) 261-7451
WEB ADDRESS: www.pasternack.com
E-MAIL ADDRESS: sales@pasternack.com

COAXIAL & FIBER OPTICS

PASTERNACK ENTERPRISES®
ESTABLISHED 1972

© 2012 Pasternack Enterprises All Rights Reserved