Peregrine Semiconductor

Advance Information

PE9308

13.5 GHz Low Power UltraCMOS™ Divide-by-4 Prescaler for RAD-Hard Space Applications

Product Description

The PE9308 is a high-performance dynamic UltraCMOS™ prescaler ideal for Ku band Transceiver applications. It has a fixed divide ratio of 4 with an operating frequency range of 4.0 GHz to 13.5 GHz. The PE9308 operates on a nominal 2.6 V supply and draws only 15 mA. It is packaged in a small 8-lead Flat Pack and is also available in Die form for Hybrid application.

The PE9308 is manufactured in Peregrine's patented Ultra Thin Silicon (UTSi©) CMOS process, offering the performance of GaAs with the economy and integration of conventional CMOS.

Features

- High-frequency operation: up to 13.5 GHz
- Fixed divide ratio of 4
- Low-power operation:15 mA typical @ 2.6V
- SEL Immune due to UltraCMOS™
- SEU <10^{-10} errors / bit-day
- 100 Krads (Si) Total Dose
- Small package: 8-lead Formed Flat pack
- Available as Die

Figure 1. Functional Schematic Diagram

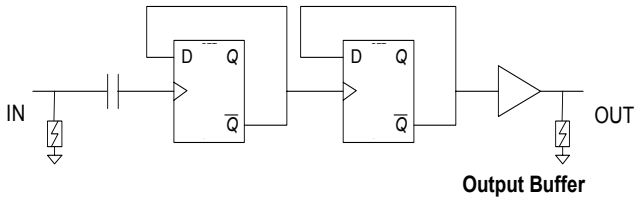

Figure 2. Package Type

8-lead CSOIC

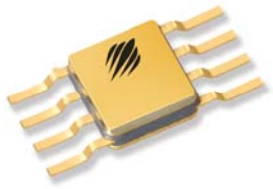

Table 1. Electrical Specifications ($Z_S = Z_L = 50\ \Omega$)

V_{DD} = 2.45< V_{DD} <2.75 V, -40° C ≤ T_A ≤ 85° C, unless otherwise specified

Parameter	Conditions	Minimum	Typical	Maximum	Units
Frequency		4000		13,500	MHz
Supply Voltage		2.45	2.6	2.75	V
Supply Current		8	15	20	mA
SSB Phase noise (PhN)	100 KHz Offset; Pin=0dBm		-120		dBc/Hz
Input Power (P_{in})	7.0 GHz ≤ F_{in} ≤ 10.0 GHz	0		+10	dBm
	4.0 GHz < F_{in} ≤ 7.0 GHz	+5		+10	dBm
Output Power (P_{out})	4.0 GHz ≤ F_{in} ≤ 10.0 GHz	0			dBm

©2005 Peregrine Semiconductor Corp. All rights reserved.

Figure 3. Pin Configuration (Top View)

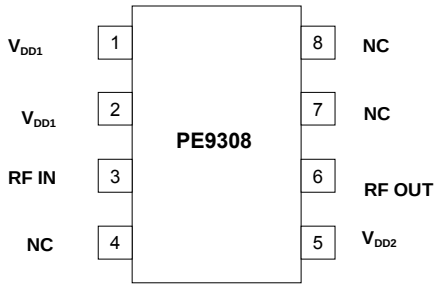

Table 2. Pin Descriptions

Pin No.	Pin Name	Description
1	V_{DD1}	DC Supply Voltage
2	V_{DD1}	DC Supply Voltage
3	RF IN	RF Input
4	NC	Not connected
5	V_{DD2}	DC Supply Voltage
6	RF OUT	RF Output.
7	NC	Not connected
8	NC	Not connected

Table 3. Absolute Maximum Ratings

Symbol	Parameter/ Conditions	Min	Max	Units
V_{DD}	DC Supply voltage		3.0	V
T_{ST}	Storage temperature range	-65	150	°C
T_{OP}	Operating temperature range	-40	85	°C
VESD	ESD voltage (Human Body Model)		250	V
P_{INMAX}	Maximum input power		14	dBm

Absolute Maximum Ratings are those values listed in the above table. Exceeding these values may cause permanent device damage. Exposure to absolute maximum ratings for extended periods may affect device reliability.

Electrostatic Discharge (ESD) Precautions

When handling this UltraCMOS™ device, observe the same precautions that you would use with other ESD-sensitive devices. Although this device contains circuitry to protect it from damage due to ESD, precautions should be taken to avoid exceeding the rating specified in Table 3.

Latch-Up Avoidance

Unlike conventional CMOS devices, UltraCMOS™ devices are immune to latch-up.

Device Functional Considerations

The PE9308 takes an input signal frequency from between 4.0 GHz to 13.5 GHz and produces an output signal frequency one-fourth that of the supplied input. In order for the prescaler to work properly, several conditions need to be adhered to. It is crucial that pins 1, 2 and 5 be supplied with a bypass capacitor to ground. In addition, the output signal (pins 6) needs to be ac coupled via an external capacitor as shown in the test circuit below.

The ground pattern on the board should be made as wide as possible to minimize ground impedance.

©2005 Peregrine Semiconductor Corp. All rights reserved.

Figure 4. Test Circuit Block Diagram

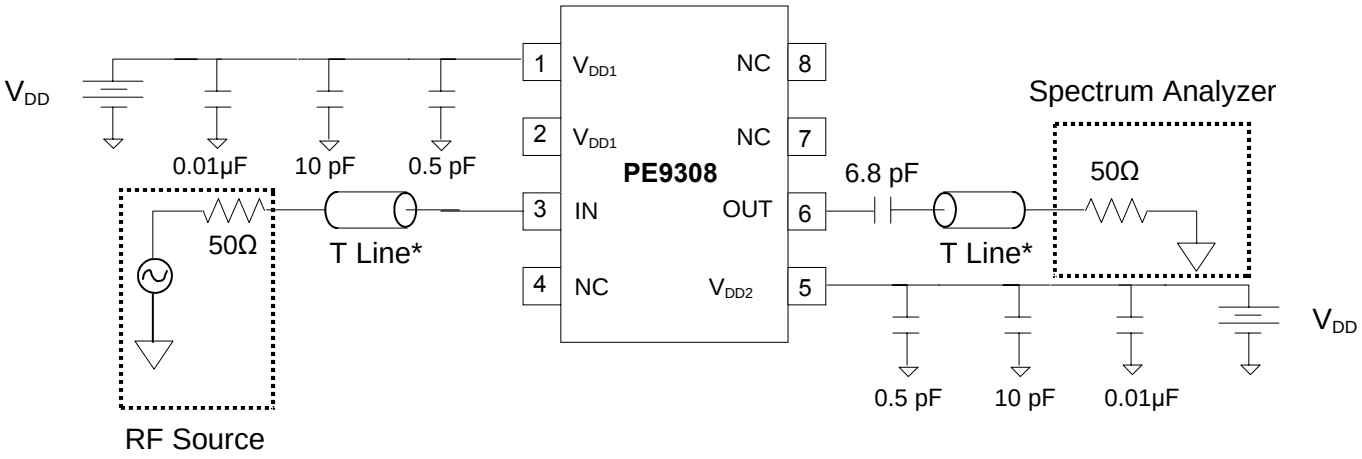

*T Line = Transmission Line

Figure 5. High Frequency System Application

The wideband frequency of operation of the PE9308 makes it an ideal part for use in a DBS down converter system.

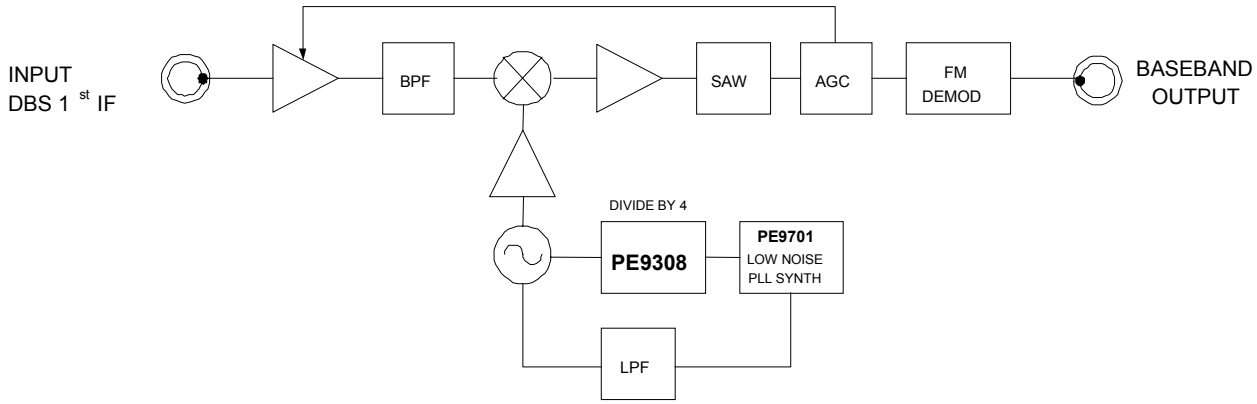

©2005 Peregrine Semiconductor Corp. All rights reserved.

Figure 6: Input Power Sensitivity vs Input Frequency at Nominal Voltage, 25 °C

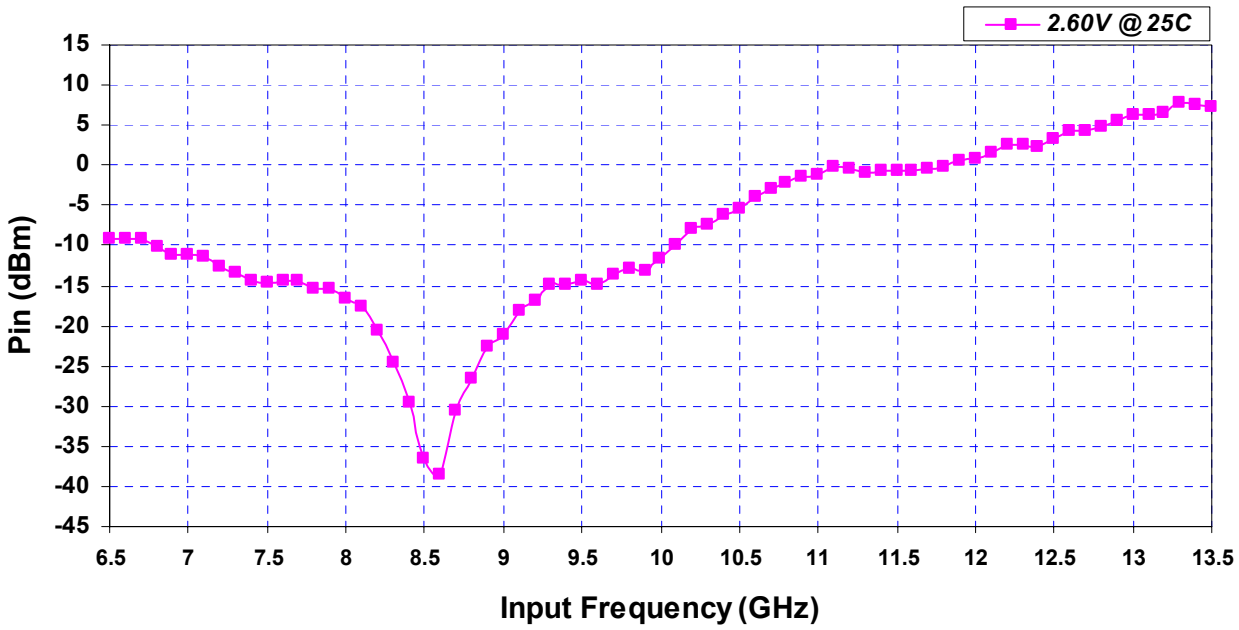

Figure 7: Output Power vs Output Frequency at Nominal Voltage, 25 °C

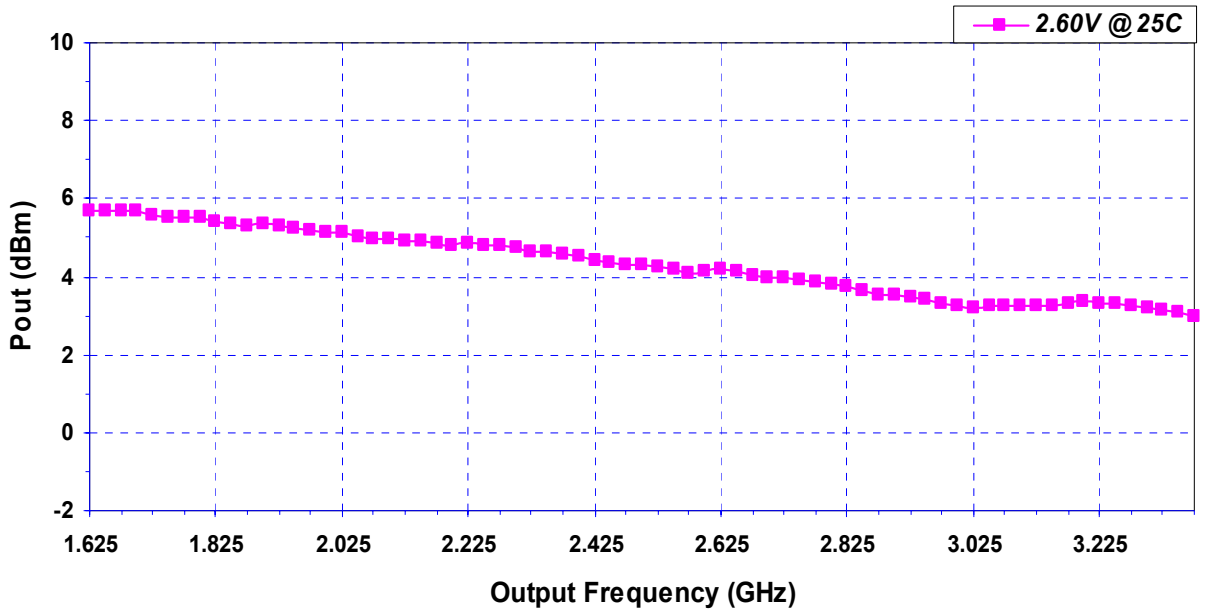

©2005 Peregrine Semiconductor Corp. All rights reserved.

Evaluation Kit

The Ceramic SOIC Prescaler Evaluation Board was designed to help customers evaluate the PE9308 divide-by-4 prescaler. On this board, the device input (pin 3) is connected to the SMA connector J2 through a 50 Ω transmission line. The device output (pin 6) is connected to SMA connector J3 through a 50 Ω transmission line.

J1 provides DC power to the device via pin 1,2,4,5,7,8.Multiple decoupling capacitors (C4,5,8,9=10pF, C3,6,7,10=0.01uF) are used. It is the responsibility of the customer to determine proper supply decoupling for their design application. The board is constructed using 4 layers. The top and bottom layers are comprised of Rogers low loss 4350 material having a core thickness of 0.010"; while the internal layers are comprised of FR-4. The overall board thickness is 0.062".

Applications Support

If you have a problem with your evaluation kit or if you have applications questions call (858) 731-9400 and ask for applications support. You may also contact us by fax or e-mail:

Fax: (858) 731-9499
E-Mail: help@psemi.com

Figure 8. Evaluation Board Layouts
Peregrine Specification 101/0186

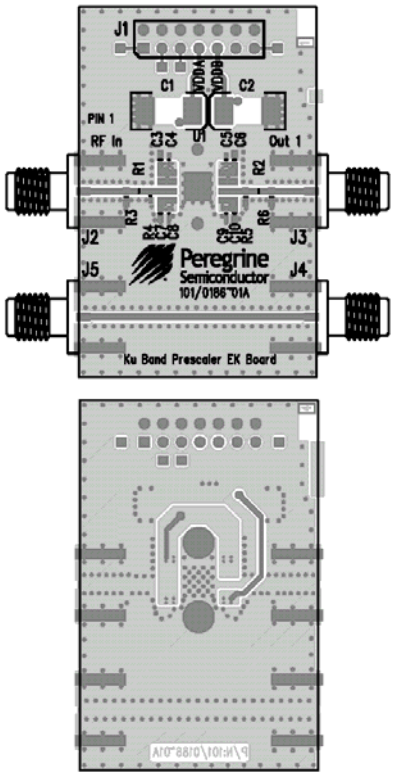

Figure 9. Evaluation Board Schematic
Peregrine Specification 102/0247

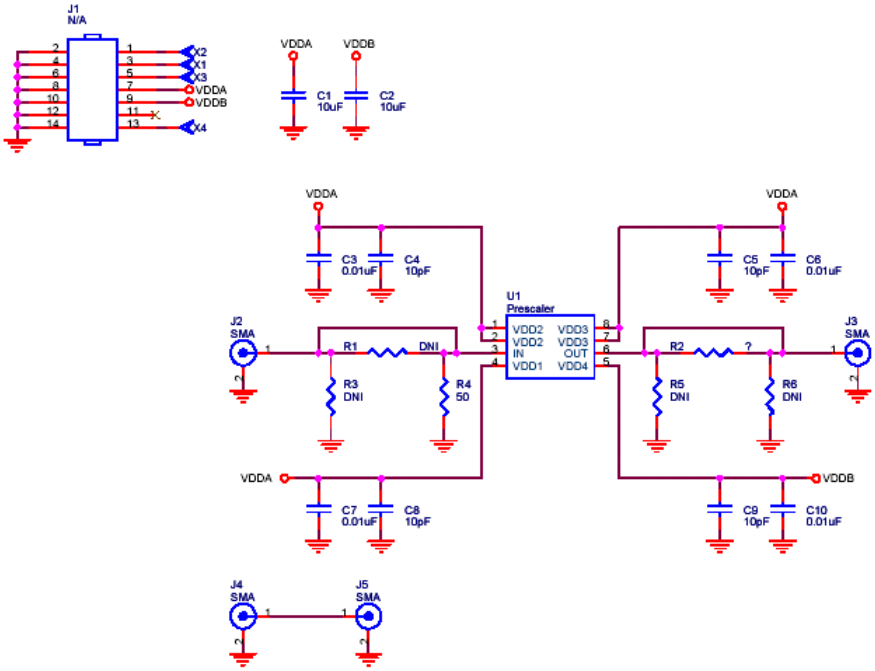

©2005 Peregrine Semiconductor Corp. All rights reserved.

Figure 10. Package Drawing

8-lead CSOIC

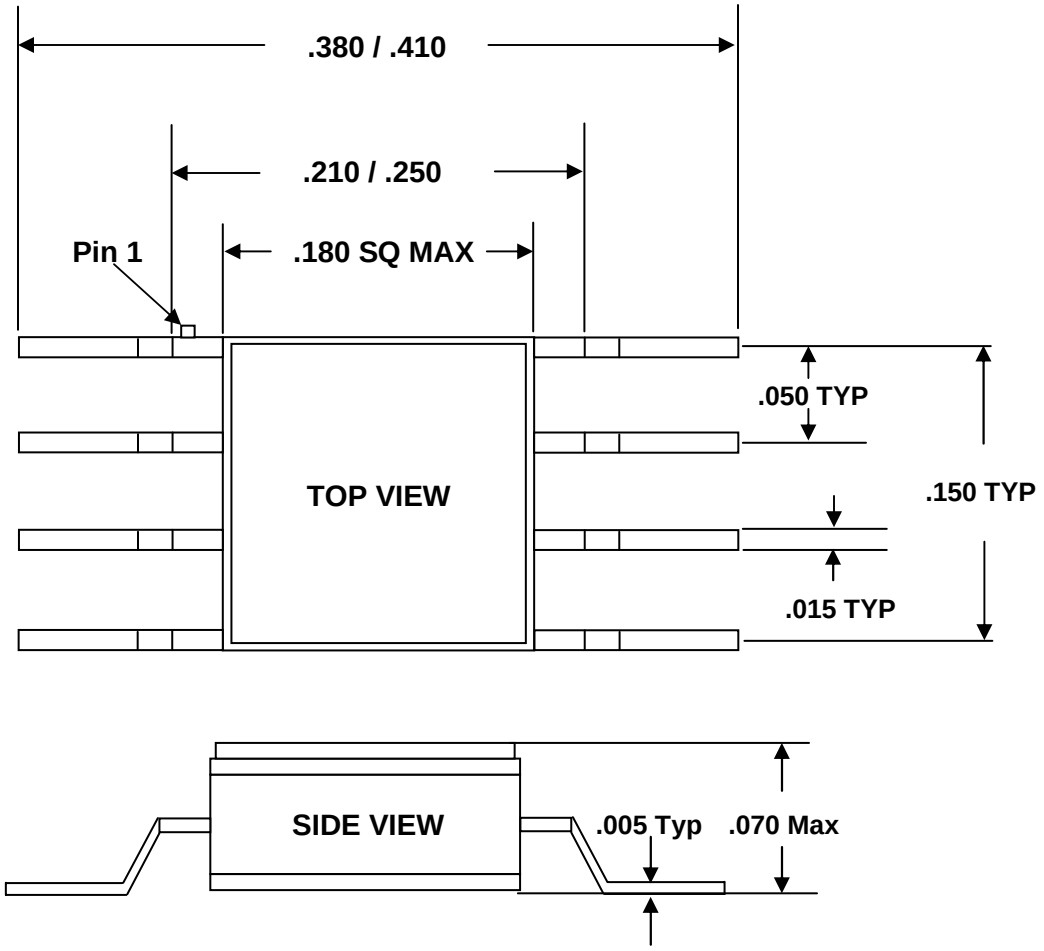

ALL DIMENSIONS ARE IN INCHES
DRAWINGS ARE NOT TO SCALE

Table 4. Ordering Information

Order Code	Part Marking	Description	Package	Shipping Method
9308-01	9308	PE9308-08CFPJ-B Engineering Samples	8-lead FLAT PACK	50 / Tray
9308-11	9308	PE9308-08CFPJ-B Production Units	8-lead FLAT PACK	50 / Tray
9308-00	PE9308-EK	PE9308 Evaluation Kit	Evaluation Board	1 / Box

©2005 Peregrine Semiconductor Corp. All rights reserved.

Sales Offices

The Americas

Peregrine Semiconductor Corp.
9450 Carroll Park Drive
San Diego, CA 92121
Tel 858-731-9400
Fax 858-731-9499

Europe

Peregrine Semiconductor Europe
Commercial Products:
Bâtiment Maine
13-15 rue des Quatre Vents
F- 92380 Garches, France
Tel: +33-1-47-41-91-73
Fax : +33-1-47-41-91-73
Space and Defense Products:
180 Rue Jean de Guiramand
13852 Aix-En-Provence cedex 3, France
Tel: +33(0) 4 4239 3361
Fax: +33(0) 4 4239 7227

North Asia Pacific

Peregrine Semiconductor K.K.
5A-5, 5F Imperial Tower
1-1-1 Uchisaiwaicho, Chiyoda-ku
Tokyo 100-0011 Japan
Tel: +81-3-3502-5211
Fax: +81-3-3502-5213

South Asia Pacific

Peregrine Semiconductor
28G, Times Square,
No. 500 Zhangyang Road,
Shanghai, 200122, P.R. China
Tel: +86-21-5836-8276
Fax: +86-21-5836-7652

For a list of representatives in your area, please refer to our Web site at: ***www.psemi.com***

Data Sheet Identification

Advance Information

The product is in a formative or design stage. The data sheet contains design target specifications for product development. Specifications and features may change in any manner without notice.

Preliminary Specification

The data sheet contains preliminary data. Additional data may be added at a later date. Peregrine reserves the right to change specifications at any time without notice in order to supply the best possible product.

Product Specification

The data sheet contains final data. In the event Peregrine decides to change the specifications, Peregrine will notify customers of the intended changes by issuing a DCN (Document Change Notice).

The information in this data sheet is believed to be reliable. However, Peregrine assumes no liability for the use of this information. Use shall be entirely at the user's own risk.

No patent rights or licenses to any circuits described in this data sheet are implied or granted to any third party.

Peregrine's products are not designed or intended for use in devices or systems intended for surgical implant, or in other applications intended to support or sustain life, or in any application in which the failure of the Peregrine product could create a situation in which personal injury or death might occur. Peregrine assumes no liability for damages, including consequential or incidental damages, arising out of the use of its products in such applications.

The Peregrine name, logo, and UTSi are registered trademarks and UltraCMOS is a trademark of Peregrine Semiconductor Corp.

©2005 Peregrine Semiconductor Corp. All rights reserved.