PASTERNACK®
www.pasternack.com

50 Ohm BNC Female to 75 Ohm SMC Plug Adapter



TECHNICAL DATA SHEET PE9236

50 Ohm BNC Female to 75 Ohm SMC Plug Adapter

Configuration

Connector 1	BNC Female
Impedance 1	50 Ohms
Connector 2	SMC Plug
Impedance 2	75 Ohms
Adapter Design	Standard
Body Style	Straight

Mechanical Specifications

Size

Length, in [mm]	1.2 [30.48]
Width/Dia., in [mm]	0.48 [12.19]

Connector 1

Type	BNC Female
Inner Conductor Material and Plating	Gold
Body Material and Plating	Brass, Nickel
Dielectric Type	PTFE

Connector 2

Type	SMC Plug
Inner Conductor Material and Plating	Gold
Coupling Nut Material and Plating	Brass, Nickel
Body Material and Plating	Brass, Nickel
Dielectric Type	PTFE

Compliance Certifications (visit www.Pasternack.com for current document)

RoHS Compliant	Yes

Plotted and Other Data

Notes:	Values at 25 °C, sea level

URL: http://www.pasternack.com/smc-plug-bnc-female-straight-adapter-pe9236-p.aspx

50 Ohm BNC Female to 75 Ohm SMC Plug Adapter from Pasternack Enterprises has same day shipment for domestic and International orders. Our RF, microwave and fiber optic products maintain a 99% availability and are part of the broadest selection in the industry.

The information contained in this document is accurate to the best of our knowledge and representative of the part described herein. It may be necessary to make modifications to the part and/or the documentation of the part, in order to implement improvements. Pasternack reserves the right to make such changes as required. Unless otherwise stated, all specifications are nominal.

Pasternack Enterprises, Inc. • P.O. Box 16759, Irvine, CA 92623
Phone: (866) 727-8376 or (949) 261-1920 • **Fax:** (949) 261-7451
Sales@Pasternack.com • Techsupport@Pasternack.com

ISO 9001 : 2008 Registered

© 2013 Pasternack Enterprises All Rights Reserved

PE9236 CAD Drawing

50 Ohm BNC Female to 75 Ohm SMC Plug Adapter

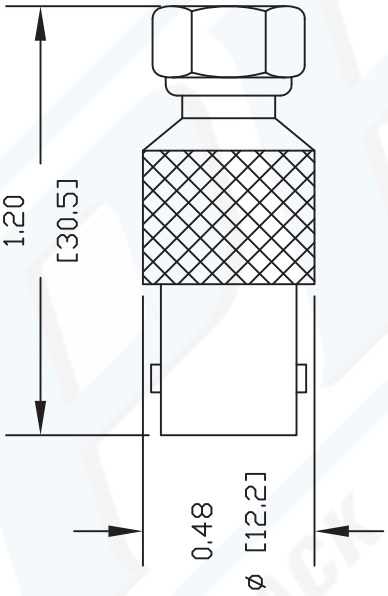

NOTES:
1. UNLESS OTHERWISE SPECIFIED ALL DIMENSIONS ARE NOMINAL.
2. ALL SPECIFICATIONS ARE SUBJECT TO CHANGE WITHOUT NOTICE AT ANY TIME.
3. DIMENSIONS ARE IN INCHES [mm].

DWG TITLE **PE9236**

REV. -	FSCM NO. 53919	CAD FILE 090302	SCALE N/A	SIZE A	127

PASTERNACK®
Pasternack Enterprises, Inc.
P.O. Box 16759 | Irvine | CA | 92623
Phone: (949) 261-1920 | **Fax:** (949) 261-7451
Website: www.pasternack.com | **E-Mail:** sales@pasternack.com

PASTERNACK ENTERPRISES®

© 2012 Pasternack Enterprises All Rights Reserved