PASTERNACK®
www.pasternack.com

Low PIM N Female to 7/16 DIN Male Adapter Low VSWR



TECHNICAL DATA SHEET PE91031

Low PIM N Female to 7/16 DIN Male Adapter Low VSWR

- PIM levels <-165 dBc
- Low VSWR levels up to 8GHz.
- Tri-metal Albaloy coating
  - durable surface with good corrosion protection
  - abrasion resistance
  - superior electrical contact properties.
- Available is various connector combinations
  - 7/16 DIN in-series
  - Type N in-series
  - 7/16 DIN to Type N and SMA in-between series
- 4-hole flange and bulkhead-mounted styles available
- Ideal choice for use in portable PIM testing

Configuration

Connector 1	N Female
Impedance 1	50 Ohms
Connector Specification 1	Mil-STD-348
Connector 2	7/16 DIN Male
Impedance 2	50 Ohms
Connector Specification 2	IEC 169-4 (0.232 dia. Enhancement)
Adapter Design	Low PIM
Body Style	Straight

Electrical Specifications

Frequency Range, GHz	DC to 8
Maximum VSWR	1.23:1
Group Delay, ps	225
Dielectric Withstanding Voltage, Vrms	1,000
Maximum Passive Intermodulation (2 x 20 Watts), dBc	-165

Frequency 1

Frequency, MHz	DC to 1,000
VSWR	1.04:1
Return Loss, dB	36

Frequency 2

Frequency, GHz	1 to 4
VSWR	1.12:1
Return Loss, dB	25

Click the following link (or enter part number in “SEARCH” on website) to obtain additional part information including price, inventory and certifications: Low PIM N Female to 7/16 DIN Male Adapter Low VSWR PE91031

The information contained in this document is accurate to the best of our knowledge and representative of the part described herein. It may be necessary to make modifications to the part and/or the documentation of the part, in order to implement improvements. Pasternack reserves the right to make such changes as required. Unless otherwise stated, all specifications are nominal.

Pasternack Enterprises, Inc. • P.O. Box 16759, Irvine, CA 92623
Phone: (866) 727-8376 or (949) 261-1920 • **Fax:** (949) 261-7451
Sales@Pasternack.com • Techsupport@Pasternack.com

ISO 9001 : 2008 Registered

© 2013 Pasternack Enterprises All Rights Reserved

Low PIM N Female to 7/16 DIN Male Adapter Low VSWR



TECHNICAL DATA SHEET PE91031

Frequency 3

Frequency, GHz	4 to 8
VSWR	1.23:1
Return Loss, dB	20

Mechanical Specifications

Temperature

Operating Range,deg C	-55 to +155

Size

Length, in [mm]	2.27 [57.66]
Width/Dia., in [mm]	1.37 [34.8]
Weight, lbs [g]	0.32 [145.15]

Connector 1

Type	N Female
Mating Cycles	500
Inner Conductor Material and Plating	Beryllium Copper, Silver
Inner Conductor Plating Specification	5 um
Outer Conductor Material and Plating	Brass, Tri-Metal
Outer Conductor Plating Specification	2.54 um
Coupling Nut Plating Specification	2.54 um
Body Material and Plating	Brass, Tri-Metal
Body Plating Specification	2.54 um
Dielectric Type	PTFE

Connector 2

Type	7/16 DIN Male
Mating Cycles	500
Inner Conductor Material and Plating	Brass, Silver
Inner Conductor Plating Specification	5 um
Outer Conductor Material and Plating	Brass, Tri-Metal
Outer Conductor Plating Specification	2.54 um
Coupling Nut Material and Plating	Brass, Tri-Metal
Coupling Nut Plating Specification	2.54 um
Hex Size, mm	32
Torque, in-lbs [Nm]	18.4 [24.95]
Body Material and Plating	Brass, Tri-Metal
Body Plating Specification	2.54 um
Dielectric Type	PTFE

Compliance Certifications (visit www.Pasternack.com for current document)

RoHS Compliant	Yes

Click the following link (or enter part number in “SEARCH” on website) to obtain additional part information including price, inventory and certifications: Low PIM N Female to 7/16 DIN Male Adapter Low VSWR PE91031

The information contained in this document is accurate to the best of our knowledge and representative of the part described herein. It may be necessary to make modifications to the part and/or the documentation of the part, in order to implement improvements. Pasternack reserves the right to make such changes as required. Unless otherwise stated, all specifications are nominal.

Pasternack Enterprises, Inc. • P.O. Box 16759, Irvine, CA 92623
Phone: (866) 727-8376 or (949) 261-1920 • **Fax:** (949) 261-7451
Sales@Pasternack.com • Techsupport@Pasternack.com

ISO 9001 : 2008 Registered

© 2013 Pasternack Enterprises All Rights Reserved

Low PIM N Female to 7/16 DIN Male Adapter Low VSWR



TECHNICAL DATA SHEET PE91031

Plotted and Other Data

Notes: Values at 25 °C, sea level

URL: http://www.pasternack.com/n-female-7-16-male-straight-adapter-pe91031-p.aspx

Low PIM N Female to 7/16 DIN Male Adapter Low VSWR from Pasternack Enterprises has same day shipment for domestic and International orders. Our RF, microwave and fiber optic products maintain a 99% availability and are part of the broadest selection in the industry.

The information contained in this document is accurate to the best of our knowledge and representative of the part described herein. It may be necessary to make modifications to the part and/or the documentation of the part, in order to implement improvements. Pasternack reserves the right to make such changes as required. Unless otherwise stated, all specifications are nominal.

Pasternack Enterprises, Inc. • P.O. Box 16759, Irvine, CA 92623
Phone: (866) 727-8376 or (949) 261-1920 • **Fax:** (949) 261-7451
Sales@Pasternack.com • Techsupport@Pasternack.com

ISO 9001 : 2008 Registered

© 2013 Pasternack Enterprises All Rights Reserved

PE91031 CAD Drawing

Low PIM N Female to 7/16 DIN Male Adapter Low VSWR

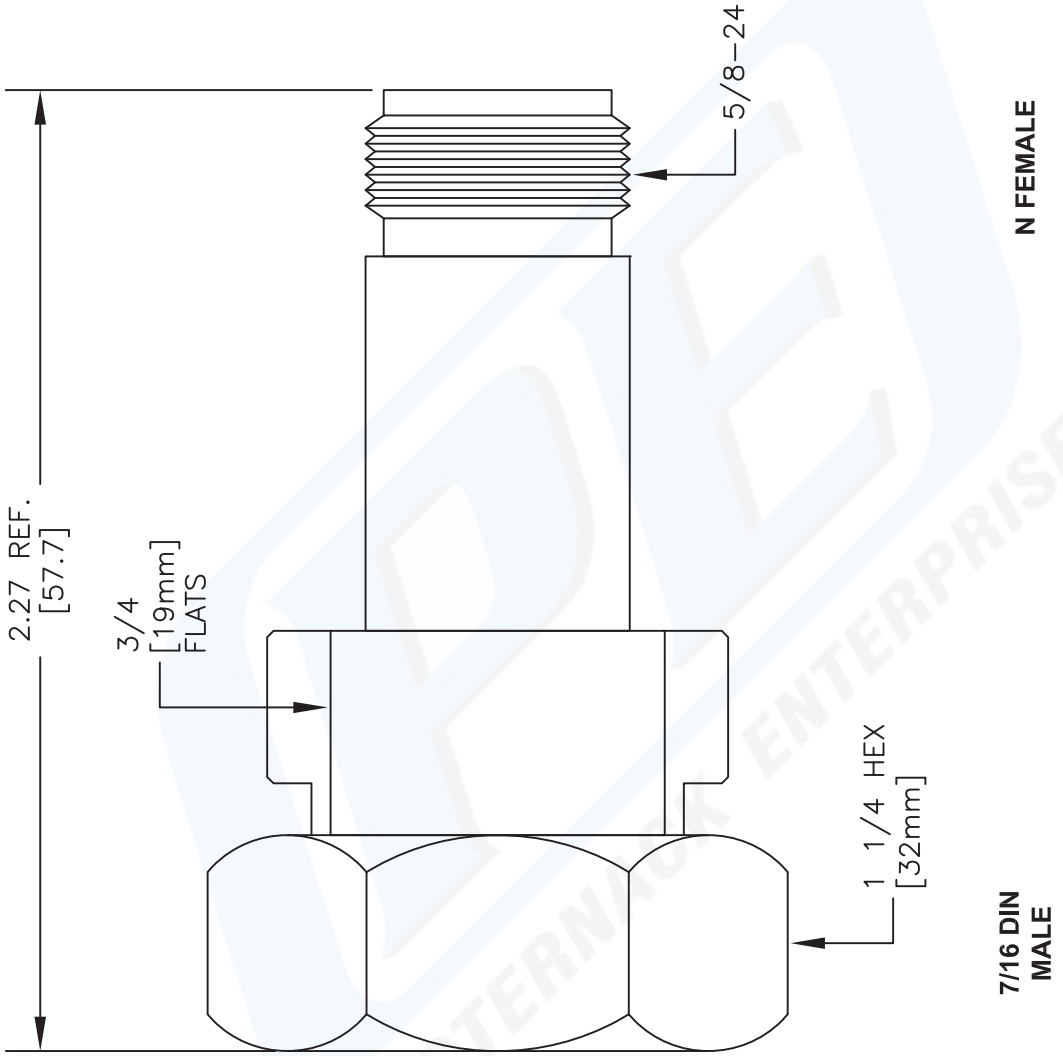

NOTES:
1. UNLESS OTHERWISE SPECIFIED ALL DIMENSIONS ARE NOMINAL.
2. ALL SPECIFICATIONS ARE SUBJECT TO CHANGE WITHOUT NOTICE AT ANY TIME.
3. DIMENSIONS ARE IN INCHES [mm].

DWG TITLE **PE91031**

CAD FILE 010913-A | SCALE N/A | SIZE A | 2233

FSCM NO. 53919

PASTERNACK®
Pasternack Enterprises, Inc.
P.O. Box 16759 | Irvine | CA | 92623
Phone: (949) 261-1920 | **Fax:** (949) 261-7451
Website: www.pasternack.com | **E-Mail:** sales@pasternack.com

© 2012 Pasternack Enterprises All Rights Reserved