PASTERNACK®
www.pasternack.com

BNC Male to BNC Female Right Angle Adapter



TECHNICAL DATA SHEET PE9085

BNC Male to BNC Female Right Angle Adapter

Configuration

Connector 1	BNC Male
Connector Specification 1	MIL-STD-348
Connector 2	BNC Female
Connector Specification 2	MIL-STD-348
Adapter Design	Standard
Body Style	Right Angle

Electrical Specifications

Frequency Range, GHz	DC to 4
Impedance, Ohms	50
Maximum Operating Voltage, Volts	500
Dielectric Withstanding Voltage, Vrms	1,500

Mechanical Specifications

Temperature

Operating Range,deg C	-65 to +165

Size

Length, in [mm]	1.06 [26.92]
Width/Dia., in [mm]	0.56 [14.22]
Height, in [mm]	0.9 [22.86]
Dielectric Type	Teflon

Connector 1

Type	BNC Male
Inner Conductor Material and Plating	Beryllium Copper, Gold
Body Material and Plating	Brass, Nickel

Connector 2

Type	BNC Female
Inner Conductor Material and Plating	Beryllium Copper, Gold
Body Material and Plating	Brass, Nickel

Compliance Certifications (visit www.Pasternack.com for current document)

RoHS Compliant	Yes

Plotted and Other Data

Notes:	Values at 25 °C, sea level

URL: http://www.pasternack.com/bnc-male-bnc-female-right-angle-adapter-pe9085-p.aspx

BNC Male to BNC Female Right Angle Adapter from Pasternack Enterprises has same day shipment for domestic and International orders. Our RF, microwave and fiber optic products maintain a 99% availability and are part of the broadest

The information contained in this document is accurate to the best of our knowledge and representative of the part described herein. It may be necessary to make modifications to the part and/or the documentation of the part, in order to implement improvements. Pasternack reserves the right to make such changes as required. Unless otherwise stated, all specifications are nominal.

Pasternack Enterprises, Inc. • P.O. Box 16759, Irvine, CA 92623
Phone: (866) 727-8376 or (949) 261-1920 • **Fax:** (949) 261-7451
Sales@Pasternack.com • Techsupport@Pasternack.com

ISO 9001 : 2008 Registered

© 2012 Pasternack Enterprises All Rights Reserved

PE9085 CAD Drawing

BNC Male to BNC Female Right Angle Adapter

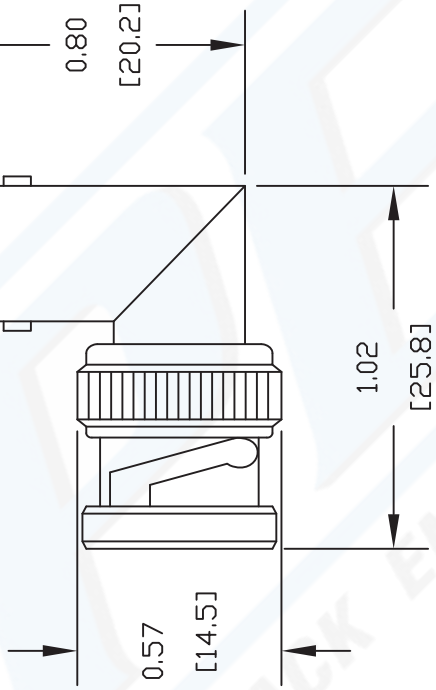

NOTES:
1. UNLESS OTHERWISE SPECIFIED ALL DIMENSIONS ARE NOMINAL.
2. ALL SPECIFICATIONS ARE SUBJECT TO CHANGE WITHOUT NOTICE AT ANY TIME.
3. DIMENSIONS ARE IN INCHES [mm].

DWG TITLE **PE9085**

REV. -	FSCM NO. 53919	CAD FILE 082602	SCALE N/A	SIZE A	127

PASTERNACK®
Pasternack Enterprises, Inc.
P.O. Box 16759 | Irvine | CA | 92623
Phone: (949) 261-1920 | **Fax:** (949) 261-7451
Website: www.pasternack.com | **E-Mail:** sales@pasternack.com

© 2012 Pasternack Enterprises All Rights Reserved