PEREGRINE SEMICONDUCTOR

PRODUCT SPECIFICATION

PE83503

Military Operating Temperature Range

3.5 GHz Low Power CMOS Divide-by-8 Prescaler

Features

- High-frequency operation: 1.5 GHz to 3.5 GHz
- Fixed divide ratio of 8
- Low-power operation: 12 mA typical @ 3 V across frequency
- Small package: 8-lead MSOP
- Low Cost

Product Description

The PE83503 is a high performance monolithic CMOS prescaler with a fixed divide ratio of 8. Its operating frequency range is 1.5 GHz to 3.5 GHz. The PE83503 operates on a nominal 3 V supply and draws only 12 mA. It is packaged in a small 8-lead MSOP and is ideal for microwave PLL synthesis solutions.

The PE83503 is manufactured in Peregrine's patented Ultra Thin Silicon (UTSi©) CMOS process, offering the performance of GaAs with the economy and integration of conventional CMOS.

Figure 1. Functional Schematic Diagram

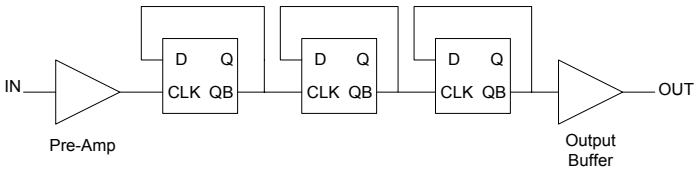

Figure 2. Package Drawing

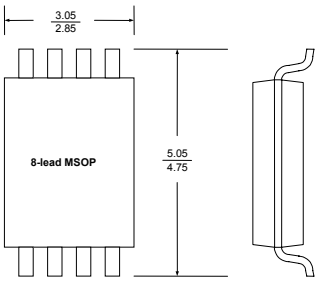

Table 1. Electrical Specifications ($Z_S = Z_L = 50\ \Omega$)

2.85V ≤ V_{DD} ≤ 3.15 V; -55° C ≤ T_A ≤ 125° C, unless otherwise specified

Parameter	Conditions	Minimum	Typical	Maximum	Units
Supply Voltage		2.85	3.0	3.15	V
Supply Current			13	19	mA
Input Frequency (F_{IN})		1.5		3.5	GHz
Input Power (P_{IN})	1500 MHz ≤ F_{in} ≤ 2800 MHz	-5		+10	dBm
	2800 MHz < F_{in} ≤ 3500 MHz	0		+10	dBm
Output Power		0			dBm

Copyright © Peregrine Semiconductor Corp. 2003

Figure 3. Pin Configuration

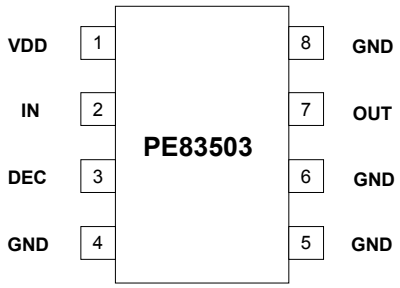

Table 2. Pin Descriptions

Pin No.	Pin Name	Description
1	VDD	Power supply pin. Bypassing is required.
2	IN	Input signal pin. Should be coupled with a capacitor (eg 15pF)
3	DEC	Power supply decoupling pin. Place a capacitor as close as possible and connect directly to the ground plane (eg 10 nF and 10 pF).
4	GND	Ground pin. Ground pattern on the board should be as wide as possible to reduce ground impedance.
5	GND	Ground pin.
6	GND	Ground pin.
7	OUT	Divided frequency output pin. This pin should be coupled with a capacitor (eg 100 pF).
8	GND	Ground pin.

Table 3. Absolute Maximum Ratings

Symbol	Parameter/Conditions	Min	Max	Units
VDD	Supply voltage		4.0	V
T_{ST}	Storage temperature range	-65	150	°C
T_{OP}	Operating temperature range	-55	125	°C
VESD	ESD voltage (Human Body Model)		250	V
P_{INMAX}	Maximum input power		15	dBm

Electrostatic Discharge (ESD) Precautions

When handling this UTSi device, observe the same precautions that you would use with other ESD-sensitive devices. Although this device contains circuitry to protect it from damage due to ESD, precautions should be taken to avoid exceeding the rating specified in Table 3.

Latch-Up Avoidance

Unlike conventional CMOS devices, UTSi CMOS devices are immune to latch-up.

Device Functional Considerations

The *PE83503* takes an input signal frequency from 1.5 GHz to 3.5 GHz and produces an output signal frequency one-eighth that of the supplied input. In order for the prescaler to work properly, several conditions need to be adhered to. It is crucial that pin 3 be supplied with a bypass capacitor to ground. In addition, the input and output signals (pins 2 & 7, respectively) need to be AC coupled via an external capacitor as shown in the test circuit in Figure 7.

The ground pattern on the board should be made as wide as possible to minimize ground impedance.

Copyright © Peregrine Semiconductor Corp. 2003

Typical Performance Data: V_{DD} = 3.0V

Figure 4. Input Sensitivity

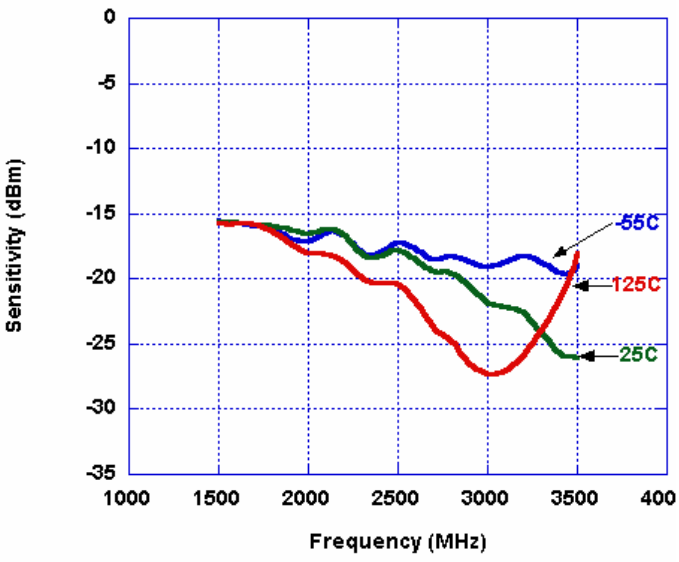

Figure 5. Device Current

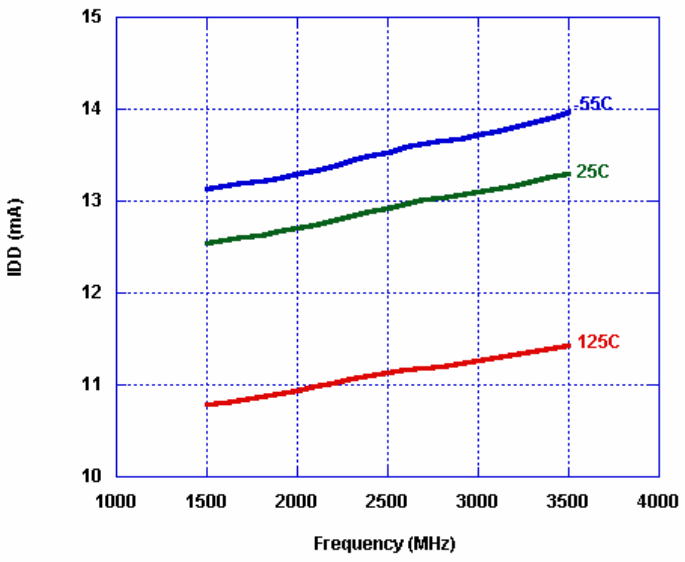

Figure 6. Output Power

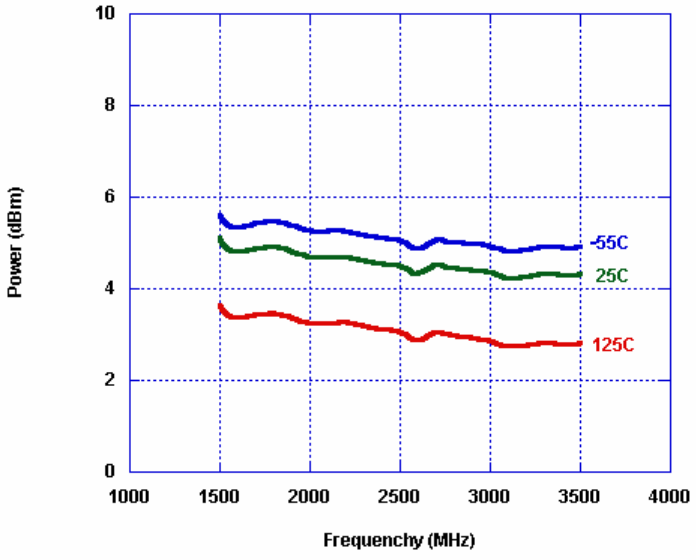

Copyright © Peregrine Semiconductor Corp. 2003

Figure 7. Test Circuit Block Diagram

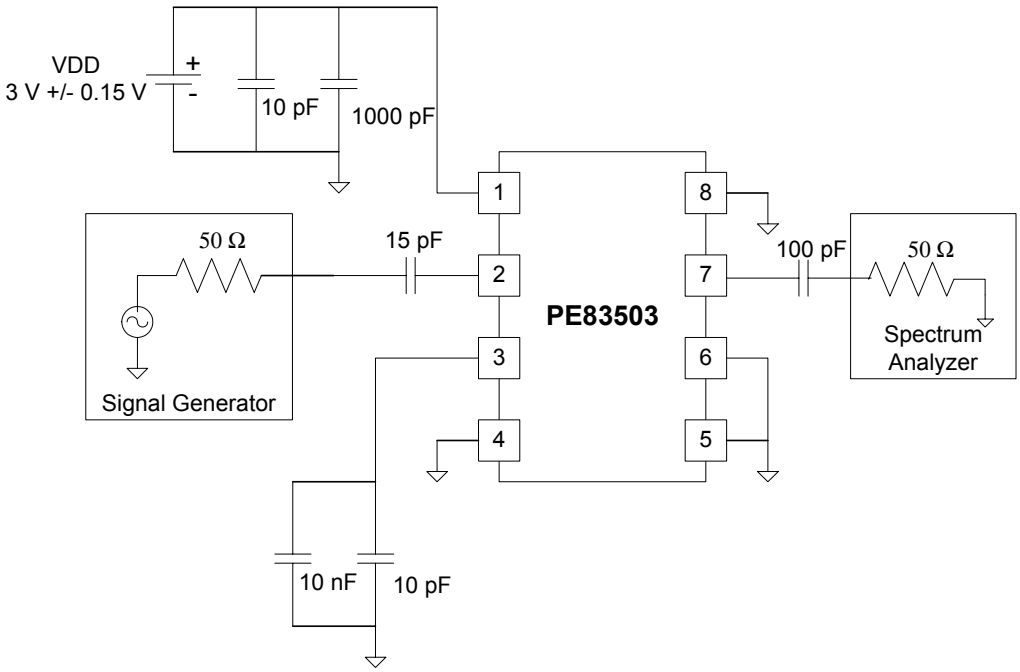

Figure 8. High Frequency System Application

The wideband frequency of operation of the *PE83503* makes it an ideal part for use in a DBS downconverter system.

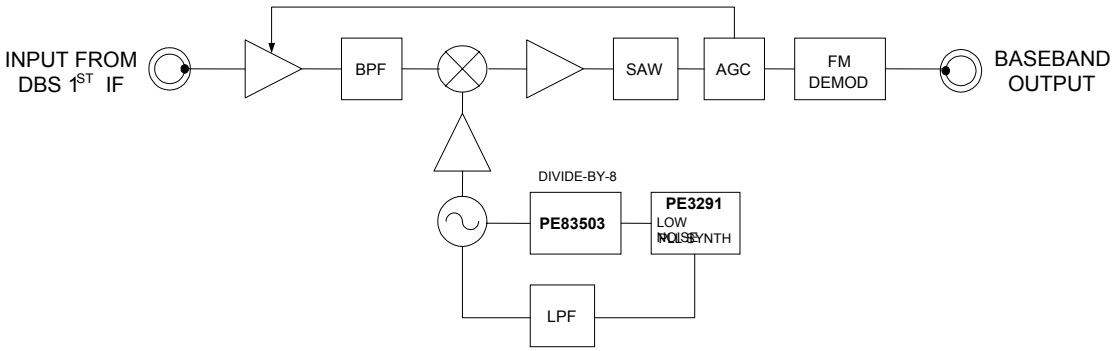

Copyright © Peregrine Semiconductor Corp. 2003

Figure 10. Evaluation Board Schematic Diagram

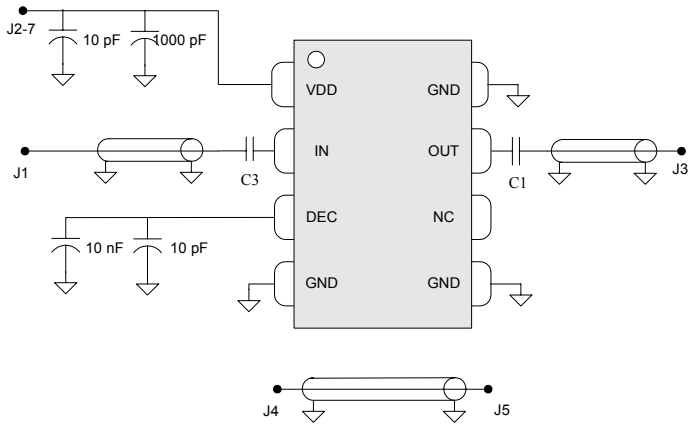

Figure 11. Evaluation Board Layout

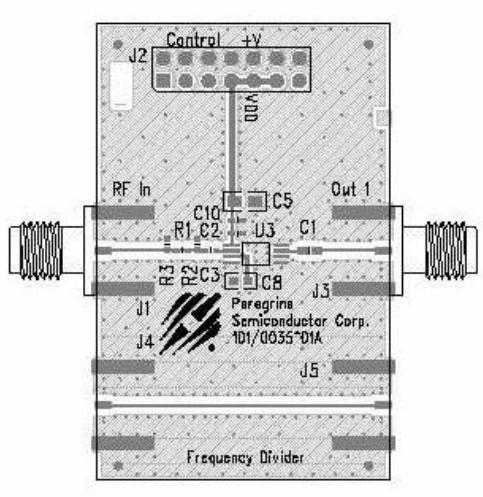

Evaluation Kit Operation

The MSOP Prescaler Evaluation Board was designed to help customers evaluate the *PE83503* Divide-by-8 Prescaler. On this board, the device input (pin 2) is connected to connector J1 through a 50 Ω transmission line. A series capacitor (C3) provides the necessary DC block for the device input. It is important to note that the value of this capacitance will impact the performance of the device. A value of 15pF was found to be optimal for this board layout; other applications may require a different value.

The device output (pin 7) is connected to connector J3 through a 50 Ω transmission line. A series capacitor (C1) provides the necessary DC block for the device output. Note that this capacitor must be chosen to have a low impedance at the desired output frequency the device. The value of 100pF was chosen to provide a wide operating range for the evaluation board.

The board is constructed of a two-layer FR4 material with a total thickness of 0.031". The bottom layer provides ground for the RF transmission lines. The transmission lines were designed using a coplanar waveguide above ground plane model with trace width of 0.030", trace gaps of 0.007", dielectric thickness of 0.028", metal thickness of 0.0014" and ε_r of 4.4. Note that the predominate mode for these transmission lines is coplanar waveguide.

J2 provides DC power to the device. Starting from the lower left pin, the second pin to the right (J2-3) is connected to the device VDD pin (1). Two decoupling capacitors (10 pF, 1000 pF) are included on this trace. It is the responsibility of the customer to determine proper supply decoupling for their design application.

The DEC pin (3) must be connected to a low impedance AC ground for proper device operation. On the board, two decoupling capacitors (C6 = 10 nF, C4 = 10 pF), located on the back of the board, perform this function.

Applications Support

If you have a problem with your evaluation kit or if you have applications questions call (858) 455-0660 and ask for applications support. You may also contact us by fax or e-mail:

Fax: (858) 455-0770
E-Mail: help@peregrine-semi.com

Copyright © Peregrine Semiconductor Corp. 2003

Figure 10. Package Drawing

8 Lead MSOP

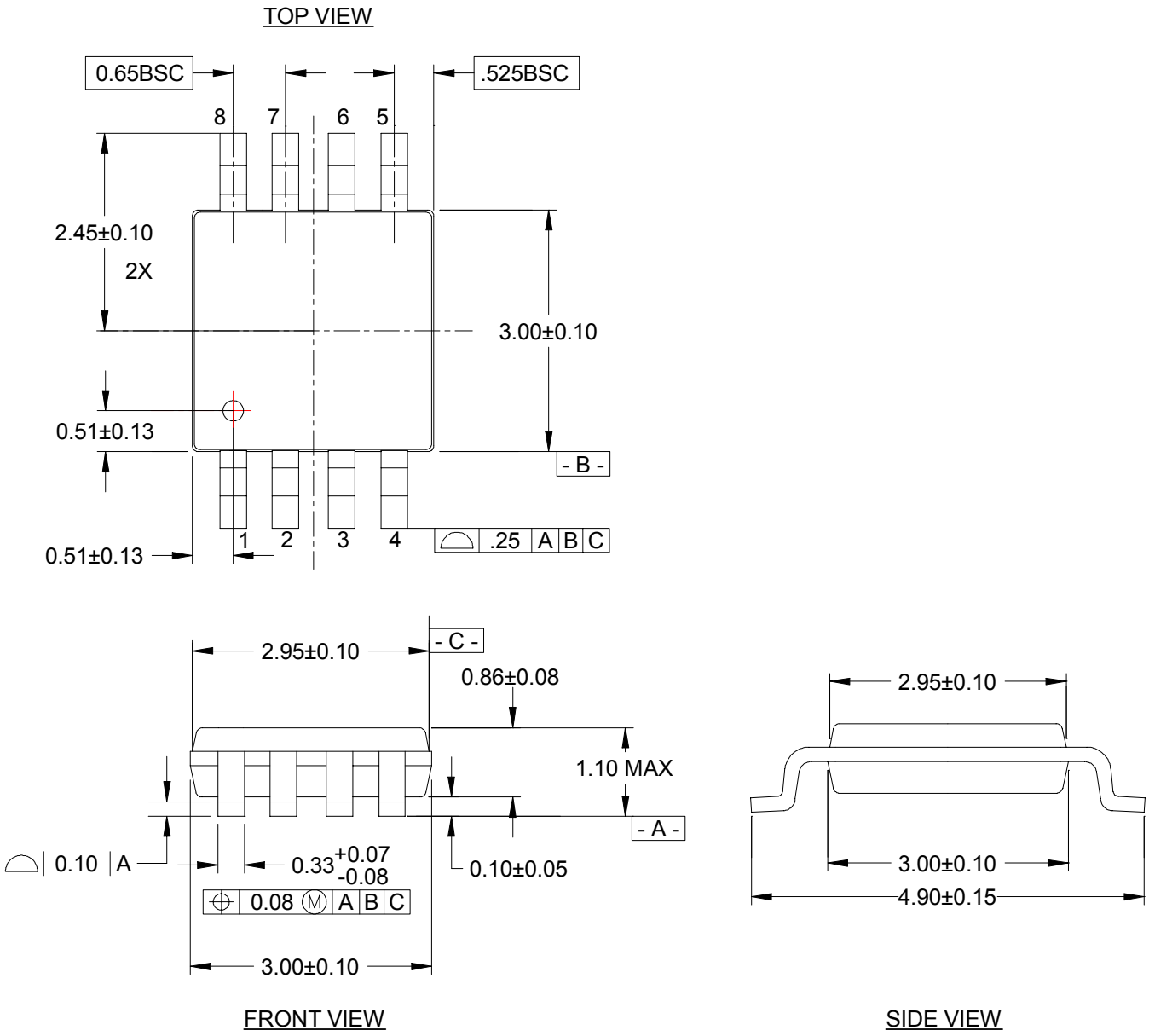

Table 4. Ordering Information

Order Code	Part Marking	Description	Package	Shipping Method
83503-21	83503	PE83503-08MSOP-100A	8-lead MSOP	50 pcs. / Tube
83503-22	83503	PE83503-08MSOP-2000C	8-lead MSOP	2000 pcs. / T&R
83503-00	PE83503-EK	PE83503-08MSOP-EK	Evaluation Board	1 / Box

Copyright © Peregrine Semiconductor Corp. 2003

Sales Offices

United States

Peregrine Semiconductor Corp.
6175 Nancy Ridge Drive
San Diego, CA 92121
Tel 1-858-455-0660
Fax 1-858-455-0770

Japan

Peregrine Semiconductor K.K.
5A-5, 5F Imperial Tower
1-1-1 Uchisiawaicho,
Chiyoda-ku, Tokyo, Japan
100-011
Tel. 011-81-3-3502-5211
Fax. 011-81-3-3502-5213

Europe

Peregrine Semiconductor Europe
Aix-En-Provence Office
Parc Club du Golf, bat 9
13856 Aix-En-Provence Cedex 3
France
Tel 33-0-4-4239-3360
Fax 33-0-4-4239-7227

For a list of representatives in your area, please refer to our Web site at: ***http://www.peregrine-semi.com***

Data Sheet Identification

Advance Information

The product is in a formative or design stage. The data sheet contains design target specifications for product development. Specifications and features may change in any manner without notice.

Preliminary Specification

The data sheet contains preliminary data. Additional data may be added at a later date. Peregrine reserves the right to change specifications at any time without notice in order to supply the best possible product.

Product Specification

The data sheet contains final data. In the event Peregrine decides to change the specifications, Peregrine will notify customers of the intended changes by issuing a PCN (Product Change Notice).

The information in this data sheet is believed to be reliable. However, Peregrine assumes no liability for the use of this information. Use shall be entirely at the user's own risk.

No patent rights or licenses to any circuits described in this data sheet are implied or granted to any third party.

Peregrine's products are not designed or intended for use in devices or systems intended for surgical implant, or in other applications intended to support or sustain life, or in any application in which the failure of the Peregrine product could create a situation in which personal injury or death might occur. Peregrine assumes no liability for damages, including consequential or incidental damages, arising out of the use of its products in such applications.

Peregrine products are protected under one or more of the following U.S. patents: 6,090,648; 6,057,555; 5,973,382; 5,973,363; 5,930,638; 5,920,233; 5,895,957; 5,883,396; 5,864,162; 5,863,823; 5,861,336; 5,663,570; 5,610,790; 5,600,169; 5,596,205; 5,572,040; 5,492,857; 5,416,043. Other patents are pending.

Peregrine, the Peregrine logotype, Peregrine Semiconductor Corp., and UTSi are registered trademarks of Peregrine Semiconductor Corporation.
Copyright © 2003 Peregrine Semiconductor Corp. All rights reserved.

Copyright © Peregrine Semiconductor Corp. 2003