PE76D / PE78D Series 2.5 V
PECL Clock Oscillators

January 2008

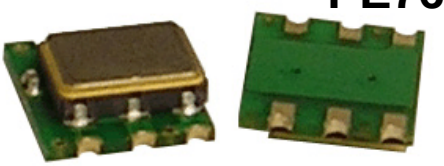

Do Not Use for New Designs - use PE55 or PE77

- Pletronics' PE76D/PE78D Series is a quartz crystal controlled precision square wave generator with a PECL output.
- FR4 base with a mechanical metal cover.
- Solder pad compatible with many 9x14mm plastic J lead packages.
- Has internal bypass capacitor on the Vcc lead
- Tape and Reel or cut tape packaging is available.
- 40 to 250 MHz
- 9.04mm x 8.91mm (S package)
- Enable/Disable PE76D on pad 1
  PE78D on pad 2)
- Disable function includes low standby power mode
- 3rd Overtone Crystals used
- Low Jitter
- 5x7 mm LCC ceramic oscillator PE77 series

Pletronics Inc. certifies this device is in accordance with the RoHS 5/6 (2002/95/EC) and WEEE (2002/96/EC) directives.

Pletronics Inc. guarantees the device does not contain the following:
Cadmium, Hexavalent Chromium, Lead, Mercury, PBB's, PBDE's
Weight of the Device: 0.4 grams
Moisture Sensitivity Level: 1 As defined in J-STD-020C
Second Level Interconnect code: e4

Absolute Maximum Ratings:

Parameter	Unit
V_{CC} Supply Voltage	-0.5V to +7.0V
Vi Input Voltage	-0.5V to V_{CC} + 0.5V
Vo Output Voltage	-0.5V to V_{CC} + 0.5V

Thermal Characteristics

The maximum die or junction temperature is 155°C
The thermal resistance junction to board is 60 to 100°C/Watt depending on the solder pads, ground plane and construction of the PCB.

Product information is current as of publication date. The product conforms to specifications per the terms of the Pletronics standard warranty. Production processsing does not necessarily include testing of all parameters.

Copyright © 2006, 2007, 2008, Pletronics Inc.

PE76D / PE78D Series 2.5 V
PECL Clock Oscillators

January 2008

Part Number:

PE7x	45	D	E	W	-125.0M	-XX

Packaging code or blank
T250 = 250 per Tape and Reel
T500 = 500 per Tape and Reel
T1K = 1000 per Tape and Reel

Frequency in MHz

Supply Voltage V_{cc}
W = 2.5V ± 10%

Optional Enhanced OTR
Blank = Temp. range -10 to +70°C
E = Temp. range -40 to +85°C

Series Model

Frequency Stability
45 = ± 50 ppm
44 = ± 25 ppm
20 = ± 20 ppm

Series Model (where x is a 6 or 8)

Part Marking:

PLE PE77
***FF.FFF* M**
• ***YMDXX***

Marking Legend: The marking is the PE77xxDW device
PLE = Pletronics The Tape and Reel and box marking shows the PE7x PN.
FF.FFF M = Frequency in MHz
YYWW or YWW or *YMD* = Date of Manufacture (year and week, or year-month-day)
All other marking is internal factory codes

Specifications such as frequency stability, supply voltage and operating temperature range, etc. are not identified from the marking. External packaging labels and packing list will correctly identify the ordered Pletronics part number.

Codes for Date Code YMD

Code	6	7	8	9	0	1	2
Year	2006	2007	2008	2009	2010	2011	2012

Code	A	B	C	D	E	F	G	H	J	K	L	M
Month	JAN	FEB	MAR	APR	MAY	JUN	JUL	AUG	SEP	OCT	NOV	DEC

Code	1	2	3	4	5	6	7	8	9	A	B	C
Day	1	2	3	4	5	6	7	8	9	10	11	12
Code	D	E	F	G	H	J	K	L	M	N	P	R
Day	13	14	15	16	17	18	19	20	21	22	23	24
Code	T	U	V	W	X	Y	Z					
Day	25	26	27	28	29	30	31					

Electrical Specification for 2.50V ±5% over the specified temperature range

Item	Min	Max	Unit	Condition
Frequency Range	40	250	MHz	
Frequency Accuracy "**45**"	-50	+50	ppm	For all supply voltages, load changes, aging for 1 year, shock, vibration and temperatures
"**44**"	-25	+25		
"**20**"	-20	+20		
Output Waveform	PECL /ECL			
Output High Level (0°C to 85°C)	1.475	1.760	volts	Referenced to Ground, V_{CC} = 2.5 V
	0.975	1.260	volts	Referenced to termination voltage, V_{CC} = 2.5 V
	-1.025	-0.740	volts	Referenced to Vcc, V_{CC} = 2.5 V
Output High Level (-40°C)	1.415	1.620	volts	Referenced to Ground, V_{CC} = 2.5 V
	0.915	1.12	volts	Referenced to termination voltage, V_{CC} = 2.5 V
	-1.085	-0.88	volts	Referenced to Vcc, V_{CC} = 2.5 V
Output Low Level (0°C to 85°C)	0.690	1.095	volts	Referenced to Ground, V_{CC} = 2.5 V
	0.190	0.595	volts	Referenced to termination voltage, V_{CC} = 2.5 V
	-1.810	-1.405	volts	Referenced to Vcc, V_{CC} = 2.5 V
Output Low Level (-40°C)	0.670	1.195	volts	Referenced to Ground, V_{CC} = 2.5 V
	0.170	0.695	volts	Referenced to termination voltage, V_{CC} = 2.5 V
	-1.830	-1.305	volts	Referenced to Vcc, V_{CC} = 2.5 V
Output Symmetry	45	55	%	at 50% point of V_{CC} (See load circuit)
Jitter	-	0.13	pS RMS	12 KHz to 20 MHz from the output frequency
	-	2.8	pS RMS	10 Hz to 1 MHz from the output frequency
Output T_{RISE} and T_{FALL}	-	0.7	nS	Vth is 20% and 80% of waveform
V_{CC} Supply Current (I_{CC})	-	90	mA	
Enable/Disable Internal Pull-up	50	-	Kohm	to V_{CC}
V disable	-	0.6	volts	Referenced to pad 3
V enable	1.7	-	volts	Referenced to pad 3
Output leakage $V_{OUT} = V_{CC}$	-10	+10	uA	Pad 1 low, device disabled
V_{OUT} = 0V	-10	+10	uA	
Enable time	-	10	nS	Time for output to reach a logic state
Disable time	-	10	nS	Time for output to reach a high Z state
Start up time	-	10	mS	Time for output to reach specified frequency
Operating Temperature Range	-10	+70	°C	Standard Temperature Range
	- 40	+85	°C	Extended Temperature Range "**E**" Option
Storage Temperature Range	-55	+125	°C	
Standby Current I_{CC}	-	3	uA	Pad 1 low, device disabled

Specifications with Pad 1 E/D open circuit

Typical Phase-Noise Response

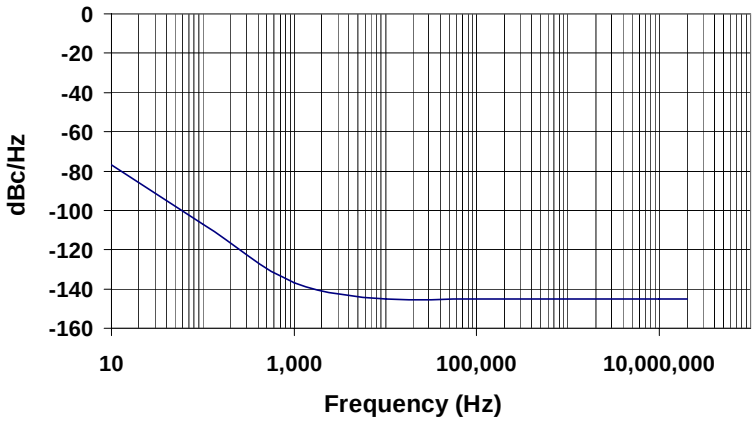

Load Circuit

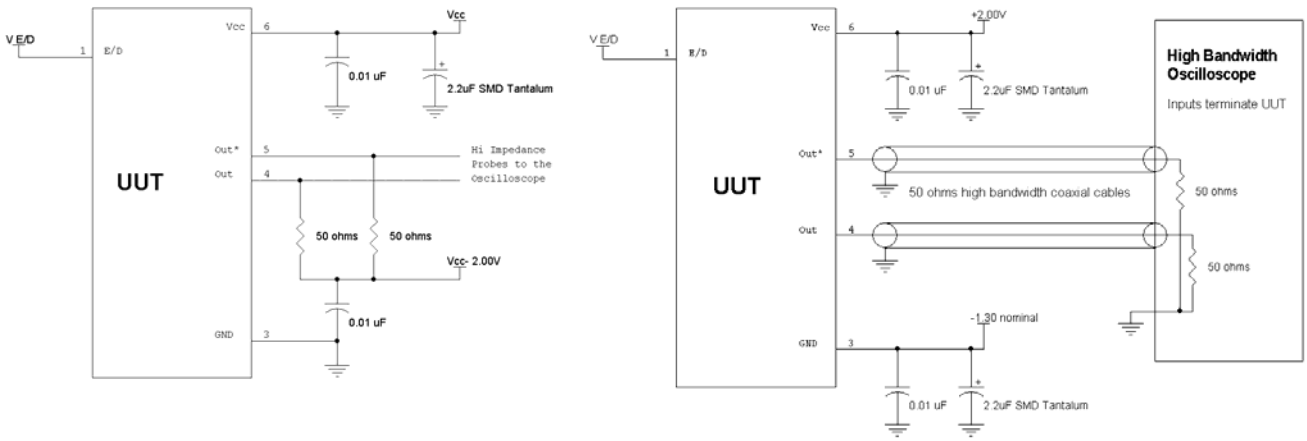

Test Waveform

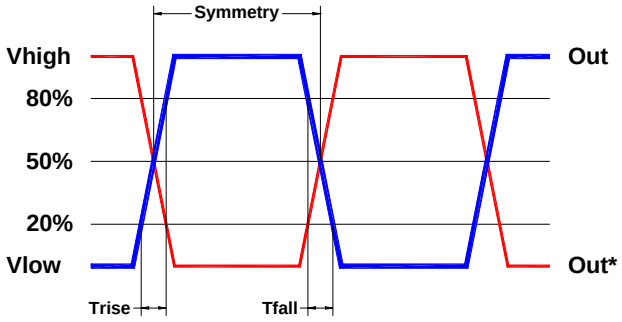

Showing Out Measurement only

Reliability: Environmental Compliance

Parameter	Condition
Mechanical Shock	MIL-STD-883 Method 2002, Condition B
Vibration	MIL-STD-883 Method 2007, Condition A
Solderability	MIL-STD-883 Method 2003
Thermal Shock	MIL-STD-883 Method 1011, Condition A

ESD Rating

Model	Minimum Voltage	Conditions
Human Body Model	1500	MIL-STD-883 Method 3115
Charged Device Model	1000	JESD 22-C101

Package Labeling

Label is 1" x 2.6" (25.4mm x 66.7mm)
Font is Courier New
Bar code is 39-Full ASCII
(PE76 example shown)



Label is 1" x 2.6" (25.4mm x 66.7mm)
Font is Arial

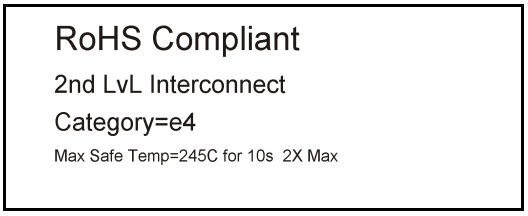

Mechanical:

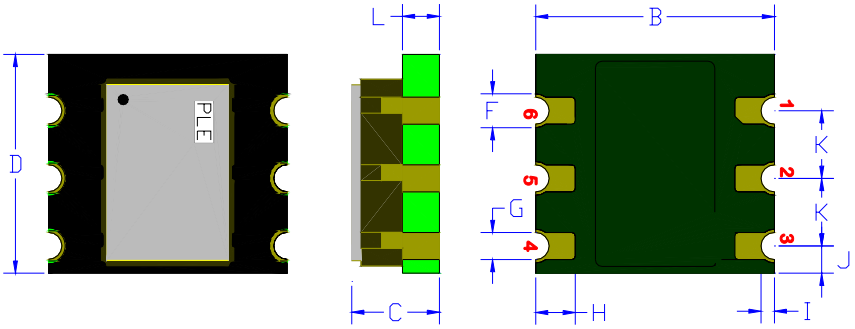

Label:
laser marked lettering

FR4 PCB Base:
Solder masked

All via holes tented on bottom
Copper Clad 670 µinch (17 µm)
Nickel plated 118 µinch (3 µm)
Gold plated 0.8 µinch (0.02 µm)
Typical thicknesses

Pin 3 Ground plane is typical
Not to scale

	Inches	mm
B	0.356 ±0.005	9.04 ±0.13
C	0.126 ±0.005	3.21 ±0.13
D	0.324 ±0.005	8.23 ±0.13
F[1]	0.050	1.27
G[1]	0.040	1.02
H[1]	0.059	1.50
I[1]	0.020	0.51
J[1]	0.040	1.02
K[1]	0.100	2.54
L[1]	0.062	1.57

Pad		Function	Note
76	78		
1	2	Output Enable/Disable	When this pad is not connected the oscillator shall operate. When this pad is <0.30 volts, the output will be inhibited (high impedance state.) Recommend connecting this pad to V_{CC} if the oscillator is to be always on.
2	1	No connect	There is no internal connection to this pad
3		Ground (GND)	
4		Output	Both outputs must be terminated and biased for proper operation. The ideal termination is 50 ohms connected to 2.0V below the Supply Voltage.
5		Output*	
6		Supply Voltage (V_{CC})	Recommend connecting appropriate power supply bypass capacitors as close as possible.

Layout and application information

Recommend connecting Pad 1 and Pad 2 together to permit the design to accept both Enable/Disable input pad versions to be used

For Optimum Jitter Performance, Pletronics recommends:

- a ground plane under the device
- no large transient signals (both current and voltage) should be routed under the device
- do not layout near a large magnetic field such as a high frequency switching power supply
- do not place near piezoelectric buzzers or mechanical fans.

Mechanical (obsolete version):

The cover is no longer being supplied over this part. This part is made with a hermetically sealed PE77xxDW series oscillator. This part is now exposed.

The cover has been deleted, the cover was causing problems with the newer high temperature RoHS lead free processes. The cover purpose was only cosmetic.

All parts with 2008 date codes will be made in the new fashion.

There is no change in electrical properties.

Pletronics does recommend that all designs should transition to the PE77xxDW ceramic part.

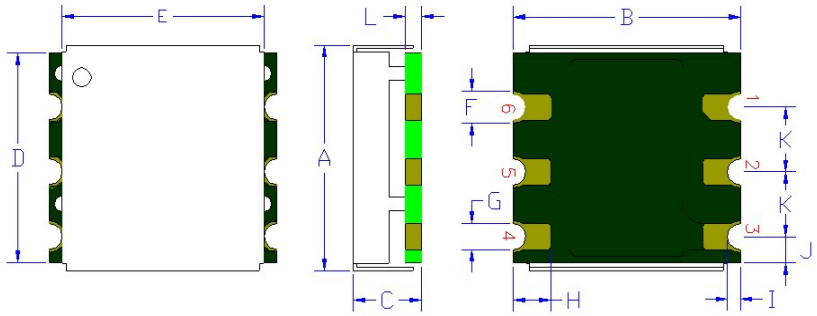

Cover:
Centered on the base
304 Stainless Steel
0.010 inch (0.25mm)
Electroless Nickel Plated
1 µinch (25 µm) typical

Label:
White Kapton with Black Letters
–or--
Blue Epoxy heat cure ink covering top with laser marked lettering

FR4 PCB Base:
Solder masked
Solder masked
All via holes tented on bottom
Copper Clad 670 µinch (17 µm)
Nickel plated 118 µinch (3 µm)
Gold plated 0.8 µinch (0.02 µm)
Typical thicknesses

Pin 3 Ground plane is typical
Not to scale

	Inches	mm
A	0.351 ±0.003	8.91 ±0.07
B	0.356 ±0.005	9.04 ±0.13
C	0.103 ±0.005	2.62 ±0.13
D[1]	0.324	8.23
E[1]	0.316	8.03
F[1]	0.050	1.27
G[1]	0.040	1.02
H[1]	0.059	1.50
I[1]	0.020	0.51
J[1]	0.040	1.02
K[1]	0.100	2.54
L[1]	0.026 typical	0.66

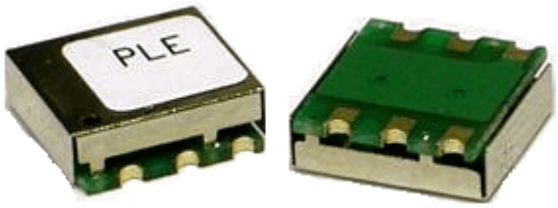

- The package is not hermetically sealed.
- The sides are intentionally left open to permit cleaning material to freely flow in the package, thus minimizing the accumulation of contaminants during cleaning processes.
- The internal part of the package must be thoroughly dry before operating.

Reflow Cycle (typical for lead free processing)

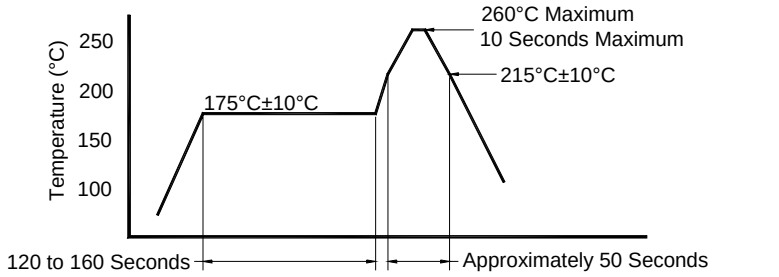

Allowed rate of temperature change
Maximum 4°C per second

The part may be reflowed 2 times without degradation.

Tape and Reel: available for quantities of 250 to 1000 per reel, cut tape for < 250

Constant Dimensions Table 1

Tape Size	D0	D1 Min	E1	P0	P2	S1 Min	T Max	T1 Max
8mm	1.5 +0.1 -0.0	1.0	1.75 ±0.1	4.0 ±0.1	2.0 ±0.05	0.6	0.6	0.1
12mm		1.5						
16mm		1.5			2.0 ±0.1			
24mm		1.5						

Variable Dimensions Table 2

Tape Size	B1 Max	E2 Min	F	P1	T2 Max	W Max	Ao, Bo & Ko
24 mm	9.88	22.25	11.5 ±0.1	16.0 ±0.1	3.22	24.3	Note 1

Note 1: Embossed cavity to conform to EIA-481-B Dimensions in mm Not to scale

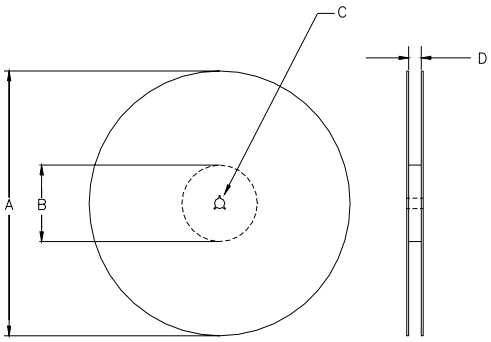

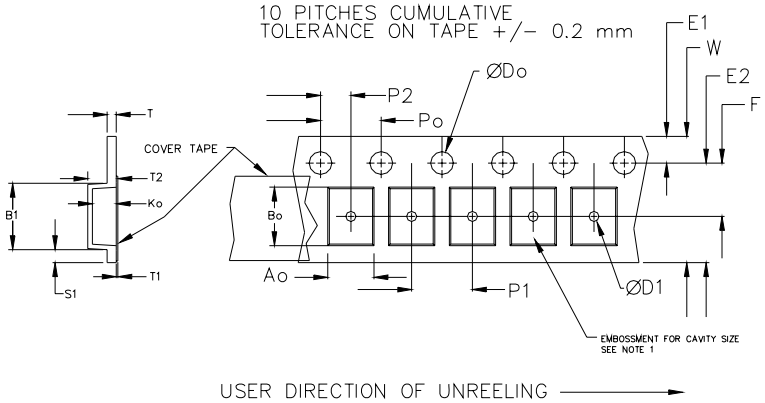

		REEL DIMENSIONS			
A	inches	7.0	10.0	13.0	
	mm	177.8	254.0	330.2	
B	inches	2.50	4.00	3.75	
	mm	63.5	101.6	95.3	Tape Width
C	mm	13.0 +0.5 / -0.2			
D	mm	---	---	24.4 +2.0 -0.0	24.0

Reel dimensions may vary from the above

IMPORTANT NOTICE

Pletronics Incorporated (PLE) reserves the right to make corrections, improvements, modifications and other changes to this product at anytime. PLE reserves the right to discontinue any product or service without notice. Customers are responsible for obtaining the latest relevant information before placing orders and should verify that such information is current and complete. All products are sold subject to PLE's terms and conditions of sale supplied at the time of order acknowledgment.

PLE warrants performance of this product to the specifications applicable at the time of sale in accordance with PLE's limited warranty. Testing and other quality control techniques are used to the extent PLE deems necessary to support this warranty. Except where mandated by specific contractual documents, testing of all parameters of each product is not necessarily performed.

PLE assumes no liability for application assistance or customer product design. Customers are responsible for their products and applications using PLE components. To minimize the risks associated with the customer products and applications, customers should provide adequate design and operating safeguards.

PLE products are not designed, intended, authorized or warranted to be suitable for use in life support applications, devices or systems or other critical applications that may involve potential risks of death, personal injury or severe property or environmental damage. Inclusion of PLE products in such applications is understood to be fully at the risk of the customer. Use of PLE products in such applications requires the written approval of an appropriate PLE officer. Questions concerning potential risk applications should be directed to PLE.

PLE does not warrant or represent that any license, either express or implied, is granted under any PLE patent right, copyright, artwork or other intellectual property right relating to any combination, machine or process which PLE product or services are used. Information published by PLE regarding third-party products or services does not constitute a license from PLE to use such products or services or a warranty or endorsement thereof. Use of such information may require a license from a third party under the patents or other intellectual property of the third party, or a license from PLE under the patents or other intellectual property of PLE.

Reproduction of information in PLE data sheets or web site is permissible only if the reproduction is without alteration and is accompanied by associated warranties, conditions, limitations and notices. Reproduction of this information with alteration is an unfair and deceptive business practice. PLE is not responsible or liable for such altered documents.

Resale of PLE products or services with statements different from or beyond the parameters stated by PLE for that product or service voids all express and implied warranties for the associated PLE product or service and is an unfair or deceptive business practice. PLE is not responsible for any such statements.

Contacting Pletronics Inc.

Pletronics Inc.
19013 36th Ave. West
Lynnwood, WA 98036-5761 USA

Tel: 425-776-1880
Fax: 425-776-2760
E-mail: ple-sales@pletronics.com
URL: www.pletronics.com

Copyright © 2006, 2007, 2008 Pletronics Inc.