PASTERNACK®
www.pasternack.com

3 dB Fixed Attenuator, TNC Male To TNC Female Rated To 25 Watts Up To 18 GHz



TECHNICAL DATA SHEET PE7375-3

3 dB Fixed Attenuator, TNC Male To TNC Female Rated To 25 Watts Up To 18 GHz

Configuration

Design	Fixed, Bidirectional Attenuator
Connector 1	TNC Male
Connector 2	TNC Female
Body Material and Plating	Aluminum Heatsink, Black Anodized

Electrical Specifications

Frequency Range, GHz	DC to 18
Impedance, Ohms	50
Attenuation Value, dB	3 to 3
Maximum Input Power, Watts	25
Maximum VSWR	1.6:1

Frequency 1

Range, GHz	DC to 6
Insertion Loss, dB	3
VSWR	1.3:1
Attenuation Accuracy, dB	0.5
Maximum Input Power, Watts	25

Frequency 2

Range, GHz	6 to 12.4
VSWR	1.45:1
Attenuation Accuracy, dB	0.75

Frequency 3

Range, GHz	12.4 to 18
VSWR	1.6:1
Attenuation Accuracy, dB	1

Mechanical Specifications

Temperature

Operating Range, deg C	-55 to +125

Size

Length, in [mm]	4.5 [114.3]
Width, in [mm]	2.41 [61.21]
Weight, lbs [g]	0.8 [362.87]

Click the following link (or enter part number in “SEARCH” on website) to obtain additional part information including price, inventory and certifications: 3 dB Fixed Attenuator, TNC Male To TNC Female Rated To 25 Watts Up To 18 GHz PE7375-3

The information contained in this document is accurate to the best of our knowledge and representative of the part described herein. It may be necessary to make modifications to the part and/or the documentation of the part, in order to implement improvements. Pasternack reserves the right to make such changes as required. Unless otherwise stated, all specifications are nominal.

Pasternack Enterprises, Inc. • P.O. Box 16759, Irvine, CA 92623
Phone: (866) 727-8376 or (949) 261-1920 • **Fax:** (949) 261-7451
Sales@Pasternack.com • Techsupport@Pasternack.com

ISO 9001 : 2008 Registered

© 2012 Pasternack Enterprises All Rights Reserved

PASTERNACK®
www.pasternack.com

3 dB Fixed Attenuator, TNC Male To TNC Female Rated To 25 Watts Up To 18 GHz



TECHNICAL DATA SHEET PE7375-3

Connector 1

Type	TNC Male
Contact Material and Plating	Brass, Gold
Contact Plating Specification	Gold
Hex Size, In.	11/16
Body Material and Plating	Stainless Steel, Passivated
Body Plating Specification	Passivated

Connector 2

Type	TNC Female
Contact Material and Plating	Beryllium Copper, Gold
Outer Conductor Material and Plating	Stainless Steel, Passivated
Hex Size, In.	11/16
Body Material and Plating	Stainless Steel, Passivated

Compliance Certifications (visit www.Pasternack.com for current document)

RoHS Compliant	Yes

Plotted and Other Data

Notes:	Values at 25 °C, sea level

URL: http://www.pasternack.com/3db-fixed-tnc-male-tnc-female-25-watts-attenuator-pe7375-3-p.aspx

3 dB Fixed Attenuator, TNC Male To TNC Female Rated To 25 Watts Up To 18 GHz from Pasternack Enterprises has same day shipment for domestic and International orders. Our RF, microwave and fiber optic products maintain a 99% availability and are part of the broadest selection in the industry.

The information contained in this document is accurate to the best of our knowledge and representative of the part described herein. It may be necessary to make modifications to the part and/or the documentation of the part, in order to implement improvements. Pasternack reserves the right to make such changes as required. Unless otherwise stated, all specifications are nominal.

Pasternack Enterprises, Inc. • P.O. Box 16759, Irvine, CA 92623
Phone: (866) 727-8376 or (949) 261-1920 • **Fax:** (949) 261-7451
Sales@Pasternack.com • Techsupport@Pasternack.com

ISO 9001 : 2008 Registered

© 2012 Pasternack Enterprises All Rights Reserved

PE7375-3 CAD Drawing

3 dB Fixed Attenuator, TNC Male To TNC Female Rated To 25 Watts Up To 18 GHz

Part Number Configuration		
xx	Input Connector	Output Connector
55	SMA Male	7/16 Female
56	SMA Male	N Female
57	SMA Male	SMA Female
58	SMA Male	TNC Female
59	SMA Female	7/16 Female
60	SMA Female	7/16 Male
61	SMA Female	N Female
62	SMA Female	N Male
63	SMA Female	SMA Female
64	SMA Female	TNC Female
65	SMA Female	TNC Male
66	N Male	7/16 Female
67	N Male	N Female
68	N Male	TNC Female
69	N Female	7/16 Female
70	N Female	7/16 Male
71	N Female	N Female
72	N Female	TNC Female
73	N Female	TNC Male
74	TNC Male	TNC Female
75	TNC Male	SMA Male
76	TNC Female	7/16 Female
77	TNC Female	7/16 Male
78	TNC Female	TNC Female
79	7/16 Male	7/16 Female
80	7/16 Female	7/16 Female
-yy	Indicates Attenuation Level	

Table of Information	
Connector Type	DIM "A" (REF.)
SMA Male	0.68
SMA Female	0.54
TNC Male	0.98
TNC Female	0.94
N Female	0.95
N Male	0.98
7/16 Male	1.12
7/16 Female	1.16

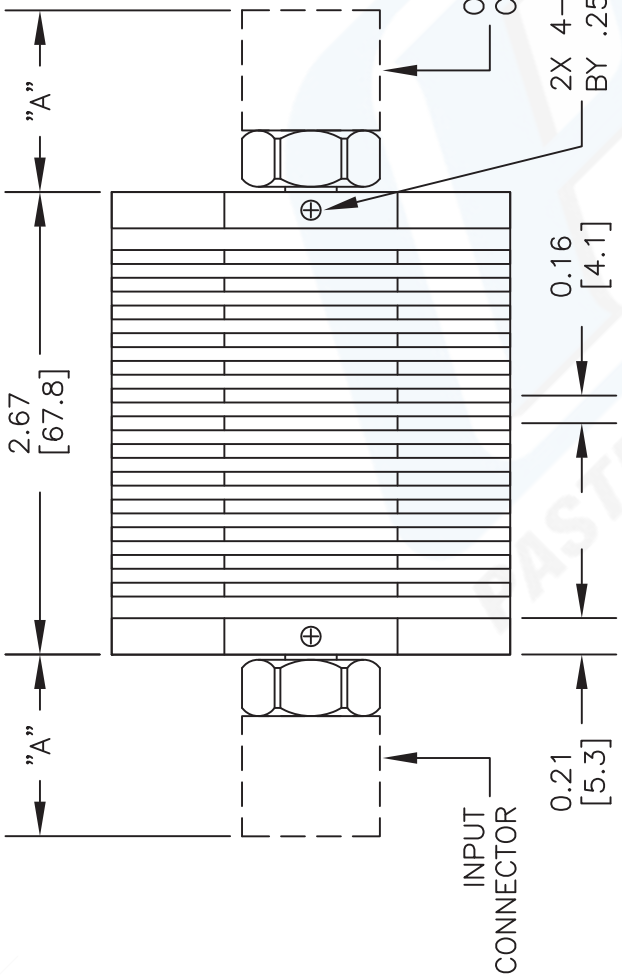

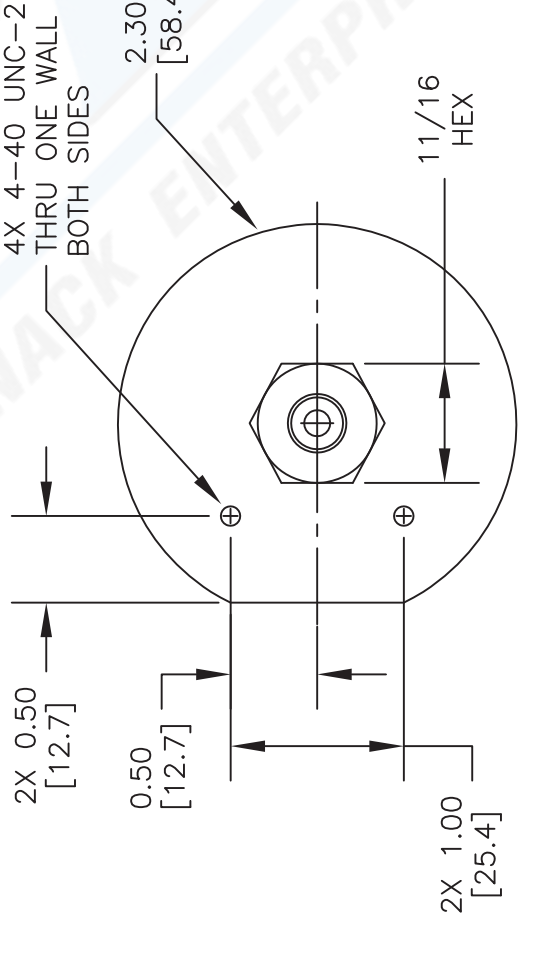

NOTES:
1. UNLESS OTHERWISE SPECIFIED ALL DIMENSIONS ARE NOMINAL.
2. ALL SPECIFICATIONS ARE SUBJECT TO CHANGE WITHOUT NOTICE AT ANY TIME.
3. DIMENSIONS ARE IN INCHES [mm].

DWG TITLE **PE73xx-yy**

CAD FILE 102512 | SCALE N/A | SIZE A | 2233

FSCM NO. 53919

PASTERNACK®
Pasternack Enterprises, Inc.
P.O. Box 16759 | Irvine | CA | 92623
Phone: (949) 261-1920 | **Fax:** (949) 261-7451
Website: www.pasternack.com | **E-Mail:** sales@pasternack.com

© 2012 Pasternack Enterprises All Rights Reserved