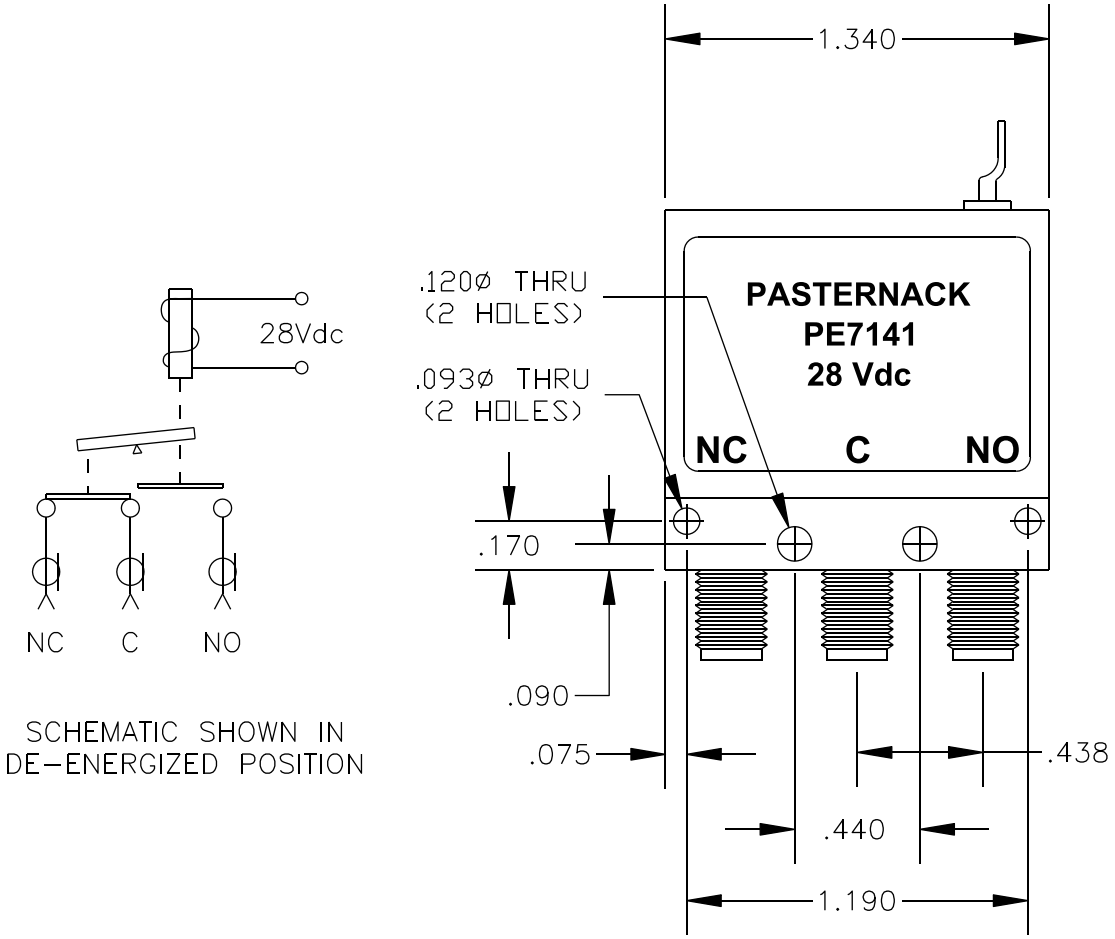

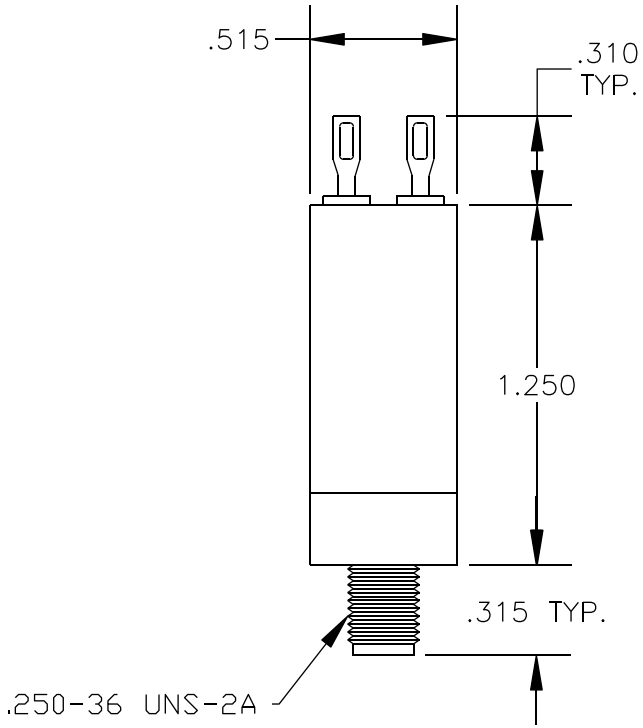

SPECIFICATIONS

SWITCH TYPE: SPDT
CONNECTOR TYPE: SMA
FREQUENCY RANGE: DC TO 18 GHz
FEATURE: FAILSAFE
VOLTAGE RANGE: 24-32 Vdc
AVERAGE POWER: 35 WATTS, MAXIMUM
ACTUATING CURRENT (mA MAXIMUM): 114 @ 28 Vdc & 25°C
VSWR: 1.50:1, MAXIMUM
INSERTION LOSS: .50 dB, MAXIMUM
ISOLATION: 60 dB, MINIMUM
NOMINAL IMPEDANCE: 50 OHM
OPERATING TEMPERATURE: -40°C +85°C

PASTERNACK ENTERPRISES, INC.
P.O BOX 16759, IRVINE, CA 92623
PHONE (949) 261-1920 FAX (949) 261-7451
WEB ADDRESS: www.pasternack.com
E-MAIL ADDRESS: sales@pasternack.com
COAXIAL & FIBER OPTICS

PASTERNACK ENTERPRISES®
ESTABLISHED 1972

DWG TITLE	DES.	
PE7141	SMA SPDT RELAY SWITCH, FAILSAFE	

REV. A	FSCM NO. 53919	CAD FILE 030309	SCALE N/A	SIZE A	147

NOTES:
1. UNLESS OTHERWISE SPECIFIED ALL DIMENSIONS ARE NOMINAL.
2. ALL SPECIFICATIONS ARE SUBJECT TO CHANGE WITHOUT NOTICE AT ANY TIME.
3. DIMENSIONS ARE IN INCHES.