PASTERNACK®
www.pasternack.com

12 dB Fixed Attenuator, 2.92mm Male To 2.92mm Female Stainless Steel Body Rated To 1 Watt Up To 40 GHz



PE7088-12

40 GHz 2.92mm Attenuator

The Pasternack PE7088 attenuator series is designed with stainless steel 2.92mm connectors for excellent performance to 40 GHz and 1 Watt. This high frequency attenuator family has a stainless steel round body construction with 9/32 flats for improved anti-torque installation and removal in a system. The high performance 40 GHz attenuator line is available in 1 dB steps from 0 dB to 10 dB for accurate system power leveling. 12 dB, 15 dB, 20 dB and 30 dB attenuators are available for millimeter wave applications.

Configuration

Connector 1	2.92mm Male
Connector 2	2.92mm Female
Frequency Range (GHz)	DC to 40
Body Material and Plating	Stainless Steel, Passivated
Design	Fixed

Electrical Specifications

Frequency Range (GHz)	DC to 40
Impedance (Ohms)	50
Power, Max Input (Watt)	1
Standard Attenuation Values (dB)	12
VSWR Max Input	1.4:1

Frequency 1

Range (GHz)	DC to 18
Attenuation Accuracy (GHz)	0.6
VSWR	1.3:1

Frequency 2

Range (GHz)	18 to 26.5
Attenuation Accuracy (±dB)	0.5
VSWR	1.4:1

Frequency 3

Range (GHz)	26.5 to 40
Attenuation Accuracy (±dB)	1
VSWR	1.4:1

Click the following link for the additional product information:
12 dB Fixed Attenuator, 2.92mm Male To 2.92mm Female Stainless Steel Body Rated To 1 Watt Up To 40 GHz PE7088-12

Version C - Revision - © 2011 Pasternack Enterprises All Rights Reserved.

Pasternack Enterprises, Inc. • P.O. Box 16759, Irvine, CA 92623
Phone: (866) 727-8376 or (949) 261-1920 • **Fax:** (949) 261-7451
Sales@Pasternack.com • Techsupport@Pasternack.com

ISO 9001 : 2008 Registered

PASTERNACK®
www.pasternack.com

12 dB Fixed Attenuator, 2.92mm Male To 2.92mm Female Stainless Steel Body Rated To 1 Watt Up To 40 GHz



PE7088-12

Mechanical Specifications

Temperature Operating Range (deg C)	-55 to +125
Body Material and Plating	Stainless Steel, Passivated

Connector 1

Type	2.92mm
Gender	Male
Body Material and Plating	Stainless Steel, Passivated
Inner Conductor Material and Plating	BeCu, Gold
Outer Conductor Material and Plating	Stainless Steel, Passivated
Coupling Nut Material and Plating	Stainless Steel, Passivated

Connector 2

Type	2.92mm
Gender	Female
Body Material and Plating	Stainless Steel, Passivated
Inner Conductor Material and Plating	BeCu, Gold
Outer Conductor Material and Plating	Stainless Steel, Passivated
Coupling Nut Material and Plating	Stainless Steel, Passivated

Compliance Certifications (visit www.Pasternack.com for current document)

RoHS Compliant	Yes, by exemption

Other Data

URL: http://www.pasternack.com/12db-fixed-2.92mm-male-2.92mm-female-1-watt-attenuator-pe7088-12-p.aspx

12 dB Fixed Attenuator, 2.92mm Male To 2.92mm Female Stainless Steel Body Rated To 1 Watt Up To 40 GHz from Pasternack Enterprises has same day shipment for domestic and International orders. Our RF, microwave and fiber optic products maintain a 99% availability and are part of the broadest selection in the industry.

Version C - Revision - © 2011 Pasternack Enterprises All Rights Reserved.

Pasternack Enterprises, Inc. • P.O. Box 16759, Irvine, CA 92623
Phone: (866) 727-8376 or (949) 261-1920 • **Fax:** (949) 261-7451
Sales@Pasternack.com • Techsupport@Pasternack.com

ISO 9001 : 2008 Registered

PE7088-12 CAD Drawing

12 dB Fixed Attenuator, 2.92mm Male To 2.92mm Female Stainless Steel Body Rated To 1 Watt Up To 40 GHz

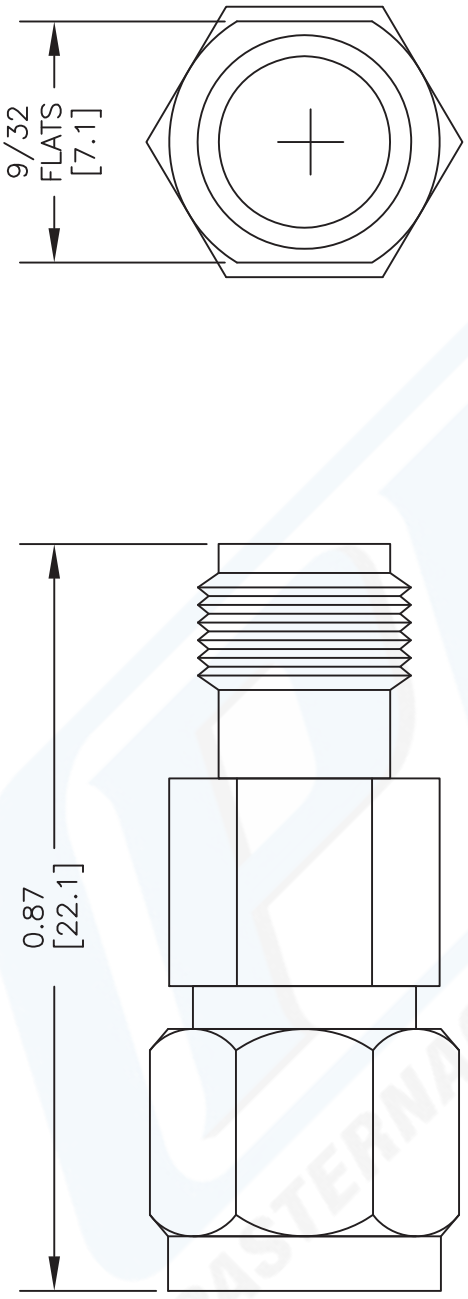

NOTES:
1. UNLESS OTHERWISE SPECIFIED ALL DIMENSIONS ARE NOMINAL.
2. ALL SPECIFICATIONS ARE SUBJECT TO CHANGE WITHOUT NOTICE AT ANY TIME.
3. DIMENSIONS ARE IN INCHES [mm].

DWG TITLE **PE7088**

REV. - | FSCM NO. 53919 | CAD FILE 061512 | SCALE N/A | SIZE A | 2233

PASTERNACK ENTERPRISES, INC.
P.O BOX 16759, IRVINE, CA 92623
PHONE (949) 261-1920 FAX (949) 261-7451
WEB ADDRESS: www.pasternack.com
E-MAIL ADDRESS: sales@pasternack.com
COAXIAL & FIBER OPTICS
PASTERNACK ENTERPRISES®
ESTABLISHED 1972

PASTERNACK ENTERPRISES®