PASTERNACK®
THE ENGINEER'S RF SOURCE



10 dB Fixed Attenuator, TNC Male to TNC Female Black Anodized Aluminum Heatsink Body Rated to 25 Watts Up to 18 GHz

RF Fixed Attenuators Technical Data Sheet PE7054-10

Features

- Bidirectional
- DC to 18 GHz Frequency Range
- Attenuation 10±1 dB
- Max Power 25 Watts (CW)
- VSWR < 1.4:1

Applications

- Instrumentation
- Precision measurements
- Prototyping and characterization
- Production systems

Description

Pasternack carries a wide range of fixed attenuators with a broad selection of attenuation levels, frequency ranges, and power dissipation ranges. RF microwave attenuators (also known as RF pads) lower the amplitude of a signal (attenuate) a known amount and can be used in a wide variety of applications. These attenuator pads are used when a signal needs to be reduced to protect measurement equipment or other circuitry, to extend the range of power meters and amplifiers, and to impedance match circuits by reducing the VSWR seen by adjacent components. RF attenuators can prevent signal overload in amplifiers, receivers and detectors, adjusting the signal level to a range that is optimal.

Few RF components are as commonly used as fixed coaxial attenuators, and Pasternack carries one of the largest in-stock varieties and ships them same day. The 10 dB Fixed Attenuator PE7054-10 is rated to 25 Watts and operates from DC to 18 GHz. The versatile coaxial package uses TNC male to TNC female connectors and is also REACH and RoHS compliant. The Black Anodized Aluminum Heatsink body allows for efficient heat dissipation under high power usage conditions.

Electrical Specifications

Description	Minimum	Typical	Maximum	Units
Frequency Range	DC		18	GHz
Impedance		50		Ohms
Nominal Attenuation		10		dB
Attenuation Accuracy		±1		dB
VSWR			1.4:1	
Input Power, CW derated linearly to 5W at +125°C			25	Watts
Input Power, Peak 5µs pulse, 0.05% duty cycle			500	Watts

Click the following link (or enter part number in “SEARCH” on website) to obtain additional part information including price, inventory and certifications: 10 dB Fixed Attenuator, TNC Male to TNC Female Black Anodized Aluminum Heatsink Body Rated to 25 Watts Up to 18 GHz PE7054-10

Pasternack Enterprises, Inc. • P.O. Box 16759, Irvine, CA 92623
Phone: (866) 727-8376 or (949) 261-1920 • **Fax:** (949) 261-7451
Sales@Pasternack.com • Techsupport@Pasternack.com

ISO 9001 : 2008 Registered

© 2016 Pasternack Enterprises All Rights Reserved

PASTERNACK®
THE ENGINEER'S RF SOURCE



10 dB Fixed Attenuator, TNC Male to TNC Female Black Anodized Aluminum Heatsink Body Rated to 25 Watts Up to 18 GHz

RF Fixed Attenuators Technical Data Sheet PE7054-10

Mechanical Specifications

Size

Length	4.66 in [118.36 mm]
Width/Diameter	2.65 in [67.31 mm]
Height	2.65 in [67.31 mm]
Weight	1.175 lbs [532.97 g]
Body Material and Plating	Black Anodized Aluminum Heatsink

Configuration

Design	Fixed, Bidirectional
Package Style	Connectorized Module

Connectors

Description	Connector 1	Connector 2
Type	TNC Male	TNC Female
Connector Specification	MIL-C-39012	MIL-C-39012
Contact Material and Plating	Beryllium Copper, Gold	Beryllium Copper, Gold
Hex Size	5/8 in.	
Torque	14 in-lbs 1.58 Nm	
Body Material and Plating	Passivated Stainless Steel	Passivated Stainless Steel

Mechanical Specification Notes:
TNC connectors are Mode-Free up to 18 GHz.

Environmental Specifications

Temperature

Operating Range	-65 to +125 deg C

Compliance Certifications (visit www.Pasternack.com for current document)

RoHS Compliant	
REACH Compliant	12/17/2015

Plotted and Other Data

Notes:

Click the following link (or enter part number in "SEARCH" on website) to obtain additional part information including price, inventory and certifications: 10 dB Fixed Attenuator, TNC Male to TNC Female Black Anodized Aluminum Heatsink Body Rated to 25 Watts Up to 18 GHz PE7054-10

Pasternack Enterprises, Inc. • P.O. Box 16759, Irvine, CA 92623
Phone: (866) 727-8376 or (949) 261-1920 • **Fax:** (949) 261-7451
Sales@Pasternack.com • Techsupport@Pasternack.com

ISO 9001 : 2008 Registered

© 2016 Pasternack Enterprises All Rights Reserved

PASTERNACK®
THE ENGINEER'S RF SOURCE



10 dB Fixed Attenuator, TNC Male to TNC Female Black Anodized Aluminum Heatsink Body Rated to 25 Watts Up to 18 GHz

RF Fixed Attenuators Technical Data Sheet PE7054-10

10 dB Fixed Attenuator, TNC Male to TNC Female Black Anodized Aluminum Heatsink Body Rated to 25 Watts Up to 18 GHz from Pasternack Enterprises has same day shipment for domestic and International orders. Our RF, microwave and millimeter wave products maintain a 99% availability and are part of the broadest selection in the industry.

Click the following link (or enter part number in "SEARCH" on website) to obtain additional part information including price, inventory and certifications: 10 dB Fixed Attenuator, TNC Male to TNC Female Black Anodized Aluminum Heatsink Body Rated to 25 Watts Up to 18 GHz PE7054-10

URL: http://www.pasternack.com/10db-fixed-tnc-male-tnc-female-25-watts-attenuator-pe7054-10-p.aspx

Pasternack Enterprises, Inc. • P.O. Box 16759, Irvine, CA 92623
Phone: (866) 727-8376 or (949) 261-1920 • **Fax:** (949) 261-7451
Sales@Pasternack.com • Techsupport@Pasternack.com

ISO 9001 : 2008 Registered

© 2016 Pasternack Enterprises All Rights Reserved

© 2016 Pasternack Enterprises All Rights Reserved

PE7054-10 CAD Drawing

10 dB Fixed Attenuator, TNC Male to TNC Female Black Anodized Aluminum Heatsink Body Rated to 25 Watts Up to 18 GHz

STANDARD TOLERANCES	
.X	±0.2
.XX	±0.1
.XXX	±0.05

*STANDARD TOLERANCES APPLY ONLY TO DIMENSIONS IN INCHES

P/N	ATTEN.	FIGURE
PE7054-1	1 dB	1
PE7054-2	2 dB	1
PE7054-3	3 dB	1
PE7054-6	6 dB	1
PE7054-10	10 dB	1
PE7054-20	20 dB	1
PE7054-30	30 dB	1
PE7054-40	40 dB	1

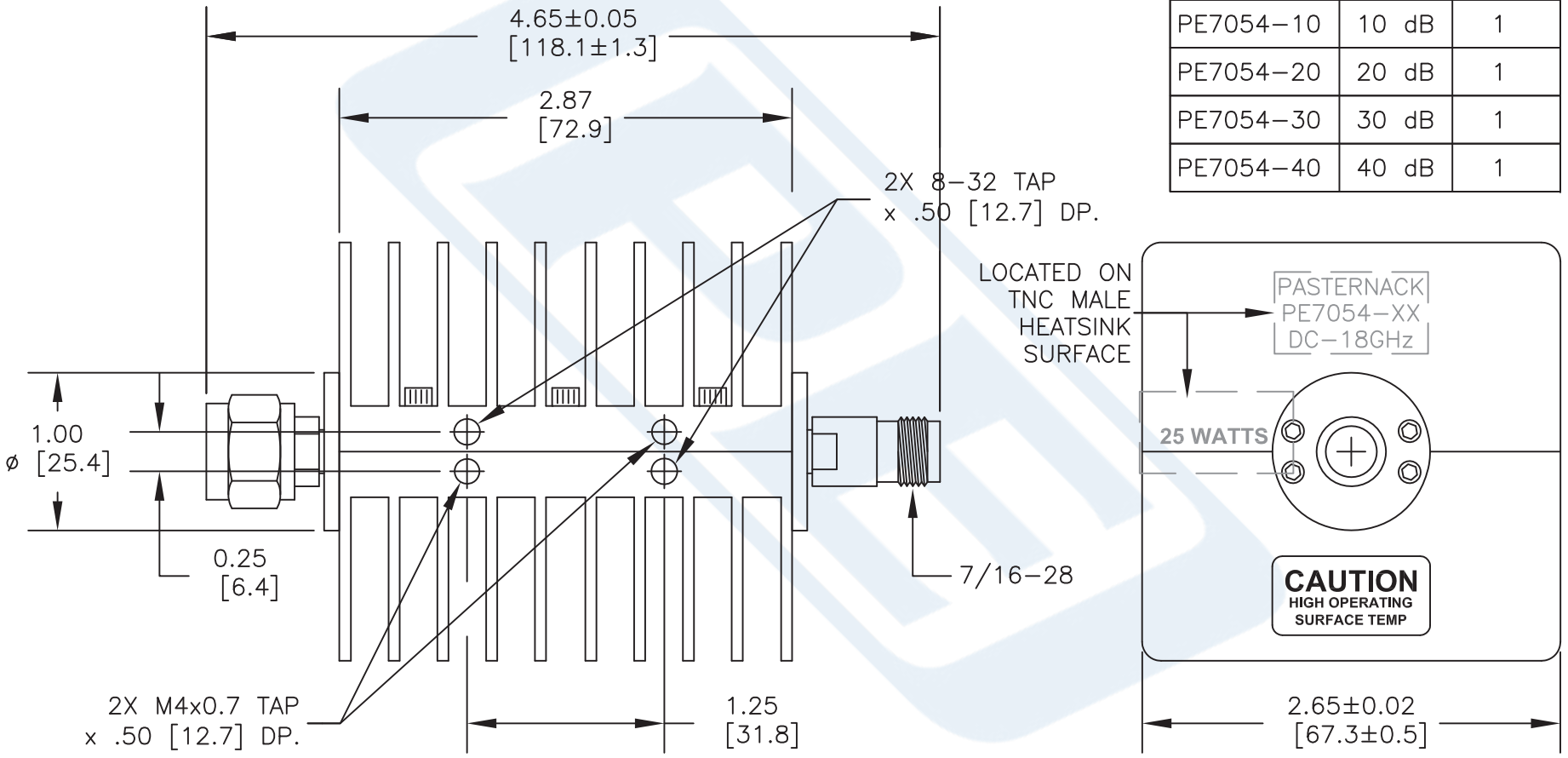

TNC MALE **FIGURE 1** **TNC FEMALE**

PASTERNACK
THE ENGINEER'S RF SOURCE
Pasternack Enterprises, Inc.
P.O. Box 16759 | Irvine | CA | 92623
Phone: (949) 261-1920 | **Fax:** (949) 261-7451
Website: www.pasternack.com | **E-Mail:** sales@pasternack.com

DWG TITLE

PE7054

NOTES:
1. UNLESS OTHERWISE SPECIFIED ALL DIMENSIONS ARE NOMINAL.
2. ALL SPECIFICATIONS ARE SUBJECT TO CHANGE WITHOUT NOTICE AT ANY TIME.
3. DIMENSIONS ARE IN INCHES [mm].

FSCM NO. 53919	CAD FILE 022916	SCALE N/A	SIZE A	3045