PASTERNACK
THE ENGINEER'S RF SOURCE



2 dB Fixed Attenuator, BNC Male to BNC Female Brass Nickel Body Rated to 2 Watts Up to 4 GHz

RF Fixed Attenuators Technical Data Sheet PE7049-2

Features

- Bidirectional
- DC to 4 GHz Frequency Range
- Attenuation 2±0.4 dB
- Max Power 2 Watts (CW)
- VSWR < 1.25:1

Applications

- Instrumentation
- Precision measurements
- Prototyping and characterization
- Production systems

Description

Pasternack carries a wide range of fixed attenuators with a broad selection of attenuation levels, frequency ranges, and power dissipation ranges. RF microwave attenuators (also known as RF pads) lower the amplitude of a signal (attenuate) a known amount and can be used in a wide variety of applications. These attenuator pads are used when a signal needs to be reduced to protect measurement equipment or other circuitry, to extend the range of power meters and amplifiers, and to impedance match circuits by reducing the VSWR seen by adjacent components. RF attenuators can prevent signal overload in amplifiers, receivers and detectors, adjusting the signal level to a range that is optimal.

Few RF components are as commonly used as fixed coaxial attenuators, and Pasternack carries one of the largest in-stock varieties and ships them same day. The 2 dB Fixed Attenuator PE7049-2 is rated to 2 Watts and operates from DC to 4 GHz. The versatile coaxial package uses BNC male to BNC female connectors and is also REACH and RoHS compliant.

Electrical Specifications

Description	Minimum	Typical	Maximum	Units
Frequency Range	DC		4	GHz
Impedance		50		Ohms
Nominal Attenuation		2		dB
Attenuation Accuracy		±0.4		dB
VSWR			1.25:1	
Input Power, CW derated linearly to 0.5W at +125°C			2	Watts
Input Power, Peak 5µs pulse, 0.05% duty cycle			250	Watts

Click the following link (or enter part number in “SEARCH” on website) to obtain additional part information including price, inventory and certifications: 2 dB Fixed Attenuator, BNC Male to BNC Female Brass Nickel Body Rated to 2 Watts Up to 4 GHz PE7049-2

Pasternack Enterprises, Inc. • P.O. Box 16759, Irvine, CA 92623
Phone: (866) 727-8376 or (949) 261-1920 • **Fax:** (949) 261-7451
Sales@Pasternack.com • Techsupport@Pasternack.com

ISO 9001 : 2008 Registered

© 2016 Pasternack Enterprises All Rights Reserved

PASTERNACK
THE ENGINEER'S RF SOURCE



2 dB Fixed Attenuator, BNC Male to BNC Female Brass Nickel Body Rated to 2 Watts Up to 4 GHz

RF Fixed Attenuators Technical Data Sheet PE7049-2

Mechanical Specifications

Size

Length	1.36 in [34.54 mm]
Width/Diameter	0.58 in [14.73 mm]
Weight	0.041 lbs [18.6 g]
Body Material and Plating	Brass, Nickel

Configuration

Design	Fixed, Bidirectional
Package Style	Connectorized Module

Connectors

Description	Connector 1	Connector 2
Type	BNC Male	BNC Female
Connector Specification	MIL-STD-348	MIL-STD-348
Contact Material and Plating	Beryllium Copper, Gold	Beryllium Copper, Gold
Coupling Nut Material and Plating	Brass, Nickel	
Body Material and Plating	Brass, Nickel	Brass, Nickel

Environmental Specifications

Temperature

Operating Range	-65 to +125 deg C

Compliance Certifications (visit www.Pasternack.com for current document)

RoHS Compliant	
REACH Compliant	12/17/2015

Plotted and Other Data

Notes:

2 dB Fixed Attenuator, BNC Male to BNC Female Brass Nickel Body Rated to 2 Watts Up to 4 GHz from Pasternack Enterprises has same day shipment for domestic and International orders. Our RF, microwave and millimeter wave products maintain a 99% availability and are part of the broadest selection in the industry.

Click the following link (or enter part number in "SEARCH" on website) to obtain additional part information including price, inventory and certifications: 2 dB Fixed Attenuator, BNC Male to BNC Female Brass Nickel Body Rated to 2 Watts Up to 4 GHz PE7049-2

URL: http://www.pasternack.com/2db-fixed-bnc-male-bnc-female-2-watts-attenuator-pe7049-2-p.aspx

Pasternack Enterprises, Inc. • P.O. Box 16759, Irvine, CA 92623
Phone: (866) 727-8376 or (949) 261-1920 • **Fax:** (949) 261-7451
Sales@Pasternack.com • Techsupport@Pasternack.com

ISO 9001 : 2008 Registered

© 2016 Pasternack Enterprises All Rights Reserved

PE7049-2 CAD Drawing

2 dB Fixed Attenuator, BNC Male to BNC Female Brass
Nickel Body Rated to 2 Watts Up to 4 GHz

P/N	ATTEN.	FIGURE
PE7049-1	1 dB	1
PE7049-2	2 dB	1
PE7049-3	3 dB	1
PE7049-6	6 dB	1
PE7049-10	10 dB	1
PE7049-20	20 dB	1
PE7049-30	30 dB	1

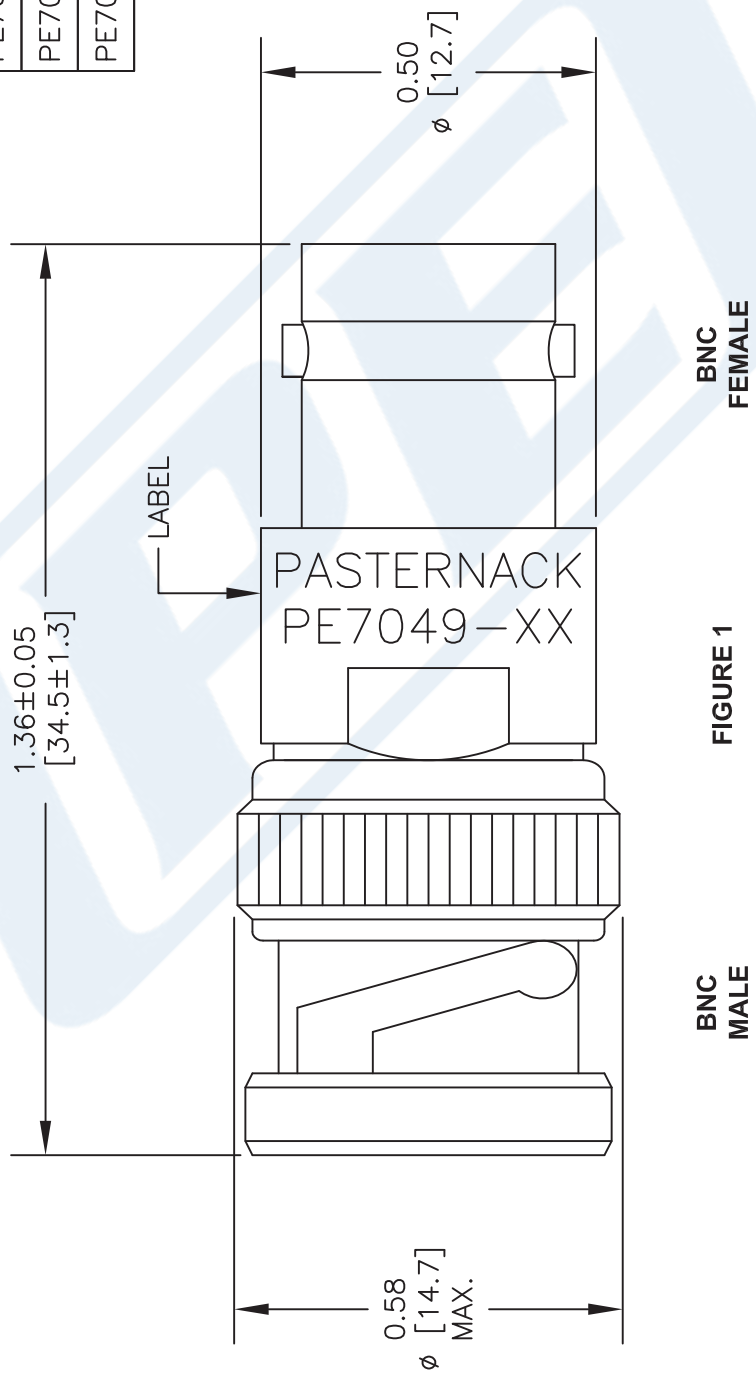

FIGURE 1

NOTES:
1. UNLESS OTHERWISE SPECIFIED ALL DIMENSIONS ARE NOMINAL.
2. ALL SPECIFICATIONS ARE SUBJECT TO CHANGE WITHOUT NOTICE AT ANY TIME.
3. DIMENSIONS ARE IN INCHES [mm].

DWG TITLE **PE7049**

CAD FILE 022916 | SCALE N/A | SIZE A | 3045

FSCM NO. 53919

PASTERNACK® THE ENGINEER'S RF SOURCE
Pasternack Enterprises, Inc.
P.O. Box 16759 | Irvine | CA | 92623
Phone: (949) 261-1920 | **Fax:** (949) 261-7451
Website: www.pasternack.com | **E-Mail:** sales@pasternack.com

© 2016 Pasternack Enterprises All Rights Reserved