PASTERNACK®
THE ENGINEER'S RF SOURCE



20 dB Fixed Attenuator, SMA Male to SMA Female Black Anodized Aluminum Heatsink Body Rated to 10 Watts Up to 18 GHz

RF Fixed Attenuators Technical Data Sheet PE7016-20

Features

- Bidirectional
- DC to 18 GHz Frequency Range
- Attenuation 20±0.7 dB
- Max Power 10 Watts (CW)
- VSWR < 1.4:1

Applications

- Instrumentation
- Precision measurements
- Prototyping and characterization
- Production systems

Description

Pasternack carries a wide range of fixed attenuators with a broad selection of attenuation levels, frequency ranges, and power dissipation ranges. RF microwave attenuators (also known as RF pads) lower the amplitude of a signal (attenuate) a known amount and can be used in a wide variety of applications. These attenuator pads are used when a signal needs to be reduced to protect measurement equipment or other circuitry, to extend the range of power meters and amplifiers, and to impedance match circuits by reducing the VSWR seen by adjacent components. RF attenuators can prevent signal overload in amplifiers, receivers and detectors, adjusting the signal level to a range that is optimal.

Few RF components are as commonly used as fixed coaxial attenuators, and Pasternack carries one of the largest in-stock varieties and ships them same day. The 20 dB Fixed Attenuator PE7016-20 is rated to 10 Watts and operates from DC to 18 GHz. The versatile coaxial package uses SMA male to SMA female connectors and is also REACH and RoHS compliant. The Black Anodized Aluminum Heatsink body allows for efficient heat dissipation under high power usage conditions.

Electrical Specifications

Description	Minimum	Typical	Maximum	Units
Frequency Range	DC		18	GHz
Impedance		50		Ohms
Nominal Attenuation		20		dB
Attenuation Accuracy		±0.7		dB
VSWR			1.4:1	
Input Power, CW derated linearly to 2W at +125°C			10	Watts
Input Power, Peak 5µs pulse, 0.05% duty cycle			500	Watts

Click the following link (or enter part number in “SEARCH” on website) to obtain additional part information including price, inventory and certifications: 20 dB Fixed Attenuator, SMA Male to SMA Female Black Anodized Aluminum Heatsink Body Rated to 10 Watts Up to 18 GHz PE7016-20

Pasternack Enterprises, Inc. • P.O. Box 16759, Irvine, CA 92623
Phone: (866) 727-8376 or (949) 261-1920 • **Fax:** (949) 261-7451
Sales@Pasternack.com • Techsupport@Pasternack.com

ISO 9001 : 2008 Registered

© 2016 Pasternack Enterprises All Rights Reserved

PASTERNACK®
THE ENGINEER'S RF SOURCE



20 dB Fixed Attenuator, SMA Male to SMA Female Black Anodized Aluminum Heatsink Body Rated to 10 Watts Up to 18 GHz

RF Fixed Attenuators Technical Data Sheet PE7016-20

Mechanical Specifications

Size

Length	1.7 in [43.18 mm]
Width/Diameter	1 in [25.4 mm]
Weight	0.055 lbs [24.95 g]
Body Material and Plating	Black Anodized Aluminum Heatsink

Configuration

Design	Fixed, Bidirectional
Package Style	Connectorized Module

Connectors

Description	Connector 1	Connector 2
Type	SMA Male	SMA Female
Connector Specification	MIL-STD-348	MIL-STD-348
Contact Material and Plating	Beryllium Copper, Gold	Beryllium Copper, Gold
Coupling Nut Material and Plating	Passivated Stainless Steel	
Hex Size	5/16 in.	
Torque	8 in-lbs 0.9 Nm	
Body Material and Plating	Passivated Stainless Steel	Passivated Stainless Steel

Environmental Specifications

Temperature

Operating Range	-65 to +125 deg C

Compliance Certifications (visit www.Pasternack.com for current document)

RoHS Compliant	
REACH Compliant	12/17/2015

Plotted and Other Data

Notes:

20 dB Fixed Attenuator, SMA Male to SMA Female Black Anodized Aluminum Heatsink Body Rated to 10 Watts Up to 18 GHz from Pasternack Enterprises has same day shipment for domestic and International orders. Our RF, microwave and millimeter wave products maintain a 99% availability and are part of the broadest selection in the industry.

Click the following link (or enter part number in "SEARCH" on website) to obtain additional part information including price, inventory and certifications: 20 dB Fixed Attenuator, SMA Male to SMA Female Black Anodized Aluminum Heatsink Body Rated to 10 Watts Up to 18 GHz PE7016-20

URL: http://www.pasternack.com/20db-fixed-sma-female-sma-male-10-watts-attenuator-pe7016-20-p.aspx

Pasternack Enterprises, Inc. • P.O. Box 16759, Irvine, CA 92623
Phone: (866) 727-8376 or (949) 261-1920 • **Fax:** (949) 261-7451
Sales@Pasternack.com • Techsupport@Pasternack.com

ISO 9001 : 2008 Registered

© 2016 Pasternack Enterprises All Rights Reserved

© 2016 Pasternack Enterprises All Rights Reserved

PE7016-20 CAD Drawing

20 dB Fixed Attenuator, SMA Male to SMA Female Black Anodized Aluminum Heatsink Body Rated to 10 Watts Up to 18 GHz

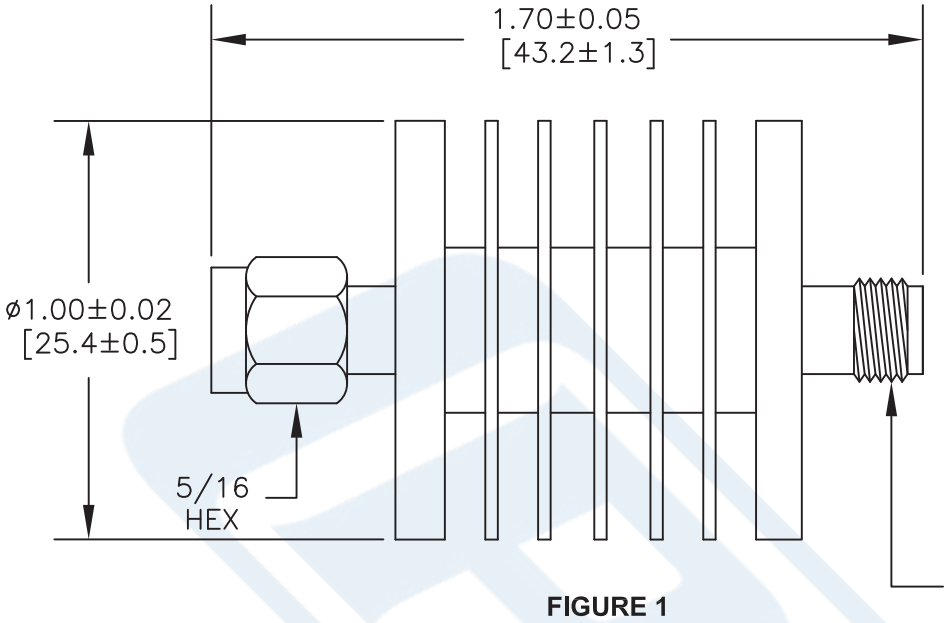

FIGURE 1

P/N	ATTEN.	FIGURE
PE7016–1	1 dB	1
PE7016–2	2 dB	1
PE7016–3	3 dB	1
PE7016–6	6 dB	1
PE7016–10	10 dB	1
PE7016–20	20 dB	1
PE7016–30	30 dB	2
PE7016–40	40 dB	2

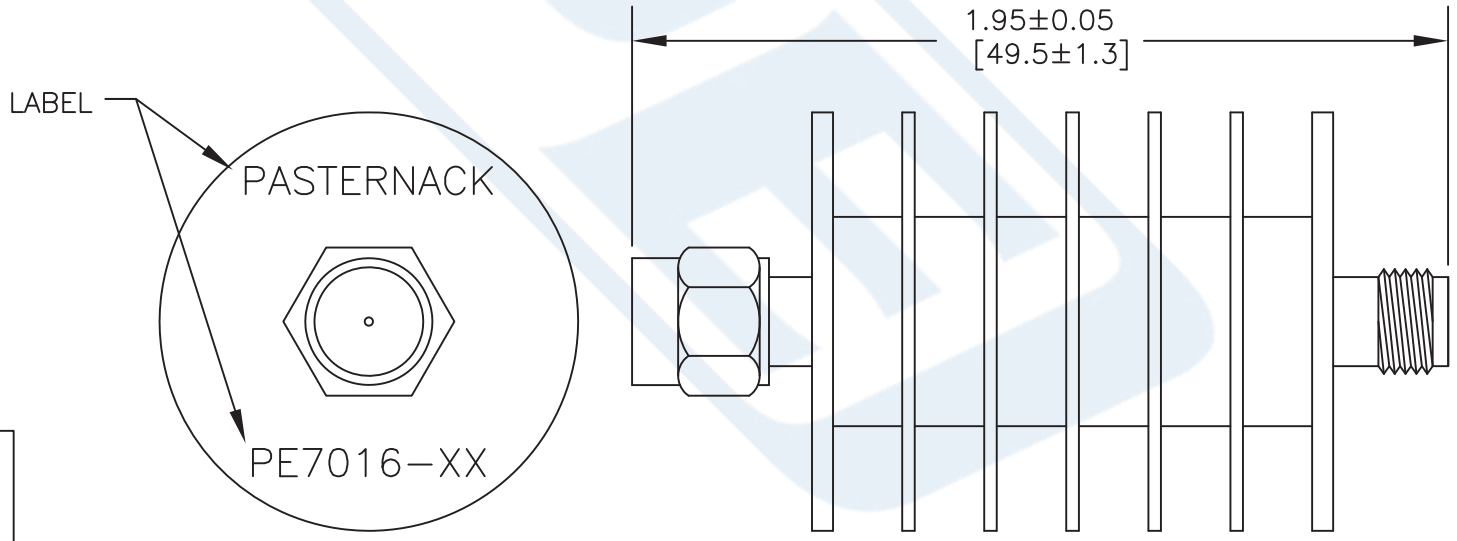

SMA MALE

FIGURE 2

SMA FEMALE

STANDARD TOLERANCES	
.X	±0.2
.XX	±0.1
.XXX	±0.05

*STANDARD TOLERANCES APPLY ONLY TO DIMENSIONS IN INCHES

PASTERNACK THE ENGINEER'S RF SOURCE
Pasternack Enterprises, Inc.
P.O. Box 16759 | Irvine | CA | 92623
Phone: (949) 261-1920 | **Fax:** (949) 261-7451
Website: www.pasternack.com | **E-Mail:** sales@pasternack.com

DWG TITLE

PE7016

NOTES:
1. UNLESS OTHERWISE SPECIFIED ALL DIMENSIONS ARE NOMINAL.
2. ALL SPECIFICATIONS ARE SUBJECT TO CHANGE WITHOUT NOTICE AT ANY TIME.
3. DIMENSIONS ARE IN INCHES [mm].

FSCM NO. 53919	CAD FILE 022516	SCALE N/A	SIZE A	3045