PASTERNACK®
www.pasternack.com

30 dB Fixed Attenuator, SMA Male To SMA Female Passivated Stainless Steel Body Rated To 2 Watts Up To 3 GHz



TECHNICAL DATA SHEET PE7001-30

30 dB Fixed Attenuator, SMA Male To SMA Female Passivated Stainless Steel Body Rated To 2 Watts Up To 3 GHz

Configuration

Design	Fixed, Bidirectional Attenuator
Connector 1	SMA Male
Connector 2	SMA Female
Body Material and Plating	Passivated Stainless Steel

Electrical Specifications

Frequency Range, GHz	DC to 3
Impedance, Ohms	50
Attenuation Value, dB	30
Maximum Input Power, Watts	2
Maximum VSWR	1.2:1

Frequency 1

Range, GHz	DC to 3
VSWR	1.2:1
Attenuation Accuracy, dB	± 0.9

Mechanical Specifications

Temperature

Operating Range, deg C	-20 to +85

Size

Length, in [mm]	0.97 [24.64]
Width, in [mm]	0.312 [7.92]
Weight, lbs [g]	0.011 [4.99]

Connector 1

Type	SMA Male
Connector Specification	MIL-STD-348
Contact Material and Plating	Beryllium Copper, Gold
Coupling Nut Material and Plating	Passivated Stainless Steel
Hex Size, in.	5/16
Torque, in-lbs [Nm]	8 [0.9]
Body Material and Plating	Passivated Stainless Steel

Connector 2

Type	SMA Female
Connector Specification	MIL-STD-348

Click the following link (or enter part number in “SEARCH” on website) to obtain additional part information including price, inventory and certifications: 30 dB Fixed Attenuator, SMA Male To SMA Female Passivated Stainless Steel Body Rated To 2 Watts Up To 3 GHz PE7001-30

The information contained in this document is accurate to the best of our knowledge and representative of the part described herein. It may be necessary to make modifications to the part and/or the documentation of the part, in order to implement improvements. Pasternack reserves the right to make such changes as required. Unless otherwise stated, all specifications are nominal.

Pasternack Enterprises, Inc. • P.O. Box 16759, Irvine, CA 92623
Phone: (866) 727-8376 or (949) 261-1920 • **Fax:** (949) 261-7451
Sales@Pasternack.com • Techsupport@Pasternack.com

ISO 9001 : 2008 Registered

© 2013 Pasternack Enterprises All Rights Reserved

PASTERNACK®
www.pasternack.com

30 dB Fixed Attenuator, SMA Male To SMA Female Passivated Stainless Steel Body Rated To 2 Watts Up To 3 GHz



TECHNICAL DATA SHEET PE7001-30

Contact Material and Plating	Beryllium Copper, Gold
Body Material and Plating	Passivated Stainless Steel

Compliance Certifications (visit www.Pasternack.com for current document)

RoHS Compliant	Yes

Plotted and Other Data

Notes:	Values at 25 °C, sea level

URL: http://www.pasternack.com/30db-fixed-sma-female-sma-male-2-watts-attenuator-pe7001-30-p.aspx

30 dB Fixed Attenuator, SMA Male To SMA Female Passivated Stainless Steel Body Rated To 2 Watts Up To 3 GHz from Pasternack Enterprises has same day shipment for domestic and International orders. Our RF, microwave and fiber optic products maintain a 99% availability and are part of the broadest selection in the industry.

The information contained in this document is accurate to the best of our knowledge and representative of the part described herein. It may be necessary to make modifications to the part and/or the documentation of the part, in order to implement improvements. Pasternack reserves the right to make such changes as required. Unless otherwise stated, all specifications are nominal.

Pasternack Enterprises, Inc. • P.O. Box 16759, Irvine, CA 92623
Phone: (866) 727-8376 or (949) 261-1920 • **Fax:** (949) 261-7451
Sales@Pasternack.com • Techsupport@Pasternack.com

ISO 9001 : 2008 Registered

© 2013 Pasternack Enterprises All Rights Reserved

PE7001-30 CAD Drawing

30 dB Fixed Attenuator, SMA Male To SMA Female Passivated
Stainless Steel Body Rated To 2 Watts Up To 3 GHz

P/N	ATTEN.	FIGURE
PE7001-1	1 dB	1
PE7001-2	2 dB	1
PE7001-3	3 dB	1
PE7001-4	4 dB	1
PE7001-5	5 dB	1
PE7001-6	6 dB	1
PE7001-7	7 dB	1
PE7001-8	8 dB	1
PE7001-9	9 dB	1
PE7001-10	10 dB	1
PE7001-12	12 dB	1
PE7001-15	15 dB	2
PE7001-20	20 dB	2
PE7001-30	30 dB	2
PE7001-40	40 dB	2

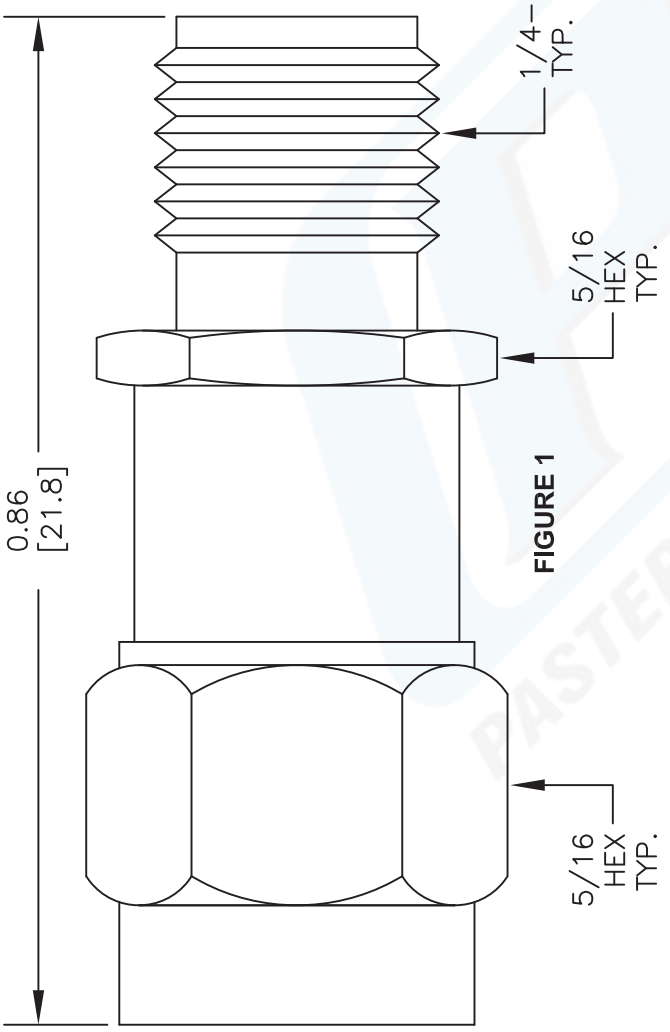

FIGURE 1

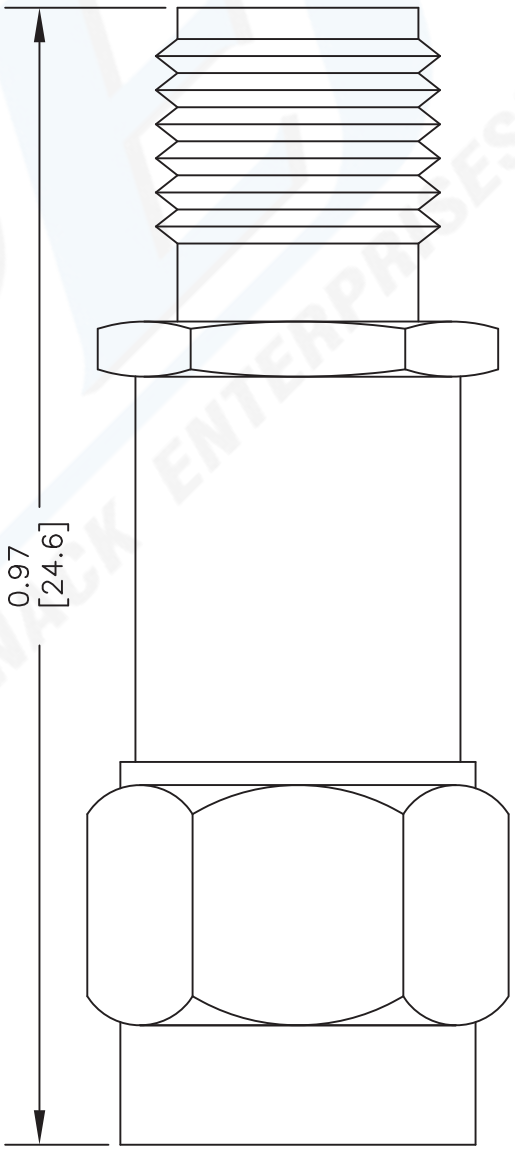

SMA FEMALE

SMA MALE

FIGURE 2

NOTES:
1. UNLESS OTHERWISE SPECIFIED ALL DIMENSIONS ARE NOMINAL.
2. ALL SPECIFICATIONS ARE SUBJECT TO CHANGE WITHOUT NOTICE AT ANY TIME.
3. DIMENSIONS ARE IN INCHES [mm].

DWG TITLE **PE7001**

FSCM NO. 53919

CAD FILE 011513 | SCALE N/A | SIZE A | 2233

PASTERNACK®
Pasternack Enterprises, Inc.
P.O. Box 16759 | Irvine | CA | 92623
Phone: (949) 261-1920 | **Fax:** (949) 261-7451
Website: www.pasternack.com | **E-Mail:** sales@pasternack.com

© 2012 Pasternack Enterprises All Rights Reserved