PASTERNACK
www.pasternack.com

50 Ohm 2 Watts Precision Passivated Stainless Steel TNC Female RF Load With Chain Up To 18 GHz



TECHNICAL DATA SHEET PE6092

50 Ohm 2 Watts Precision Passivated Stainless Steel TNC Female RF Load With Chain Up To 18 GHz

Configuration

RF Load Design	Precision
Connector	TNC Female
Connector Specification	MIL-C-39012
Heat Sink	Passivated Stainless Steel

Electrical Specifications

Frequency Range, GHz	DC to 18
Impedance, Ohms	50
Maximum VSWR	1.25:1
Maximum Input Power, Watts	2

Mechanical Specifications

Size

Length, in [mm]	1.338 [33.99]
Width/Dia., in [mm]	0.56 [14.22]

Connector

Type	TNC Female
Body Material and Plating	Passivated Stainless Steel

Compliance Certifications (visit www.Pasternack.com for current document)

RoHS Compliant	Yes

Plotted and Other Data

Notes:	Values at 25 °C, sea level

50 Ohm 2 Watts Precision Passivated Stainless Steel TNC Female RF Load With Chain Up To 18 GHz from Pasternack Enterprises has same day shipment for domestic and International orders. Our RF, microwave and fiber optic products maintain a 99% availability and are part of the broadest selection in the industry.

Click the following link (or enter part number in “SEARCH” on website) to obtain additional part information including price, inventory and certifications: 50 Ohm 2 Watts Precision Passivated Stainless Steel TNC Female RF Load With Chain Up To 18 GHz PE6092

URL: http://www.pasternack.com/tnc-female-precision-termination-pe6092-p.aspx

The information contained in this document is accurate to the best of our knowledge and representative of the part described herein. It may be necessary to make modifications to the part and/or the documentation of the part, in order to implement improvements. Pasternack reserves the right to make such changes as required. Unless otherwise stated, all specifications are nominal.

Pasternack Enterprises, Inc. • P.O. Box 16759, Irvine, CA 92623
Phone: (866) 727-8376 or (949) 261-1920 • **Fax:** (949) 261-7451
Sales@Pasternack.com • Techsupport@Pasternack.com

ISO 9001 : 2008 Registered

© 2013 Pasternack Enterprises All Rights Reserved

PE6092 CAD Drawing

50 Ohm 2 Watts Precision Passivated Stainless Steel TNC
Female RF Load With Chain Up To 18 GHz

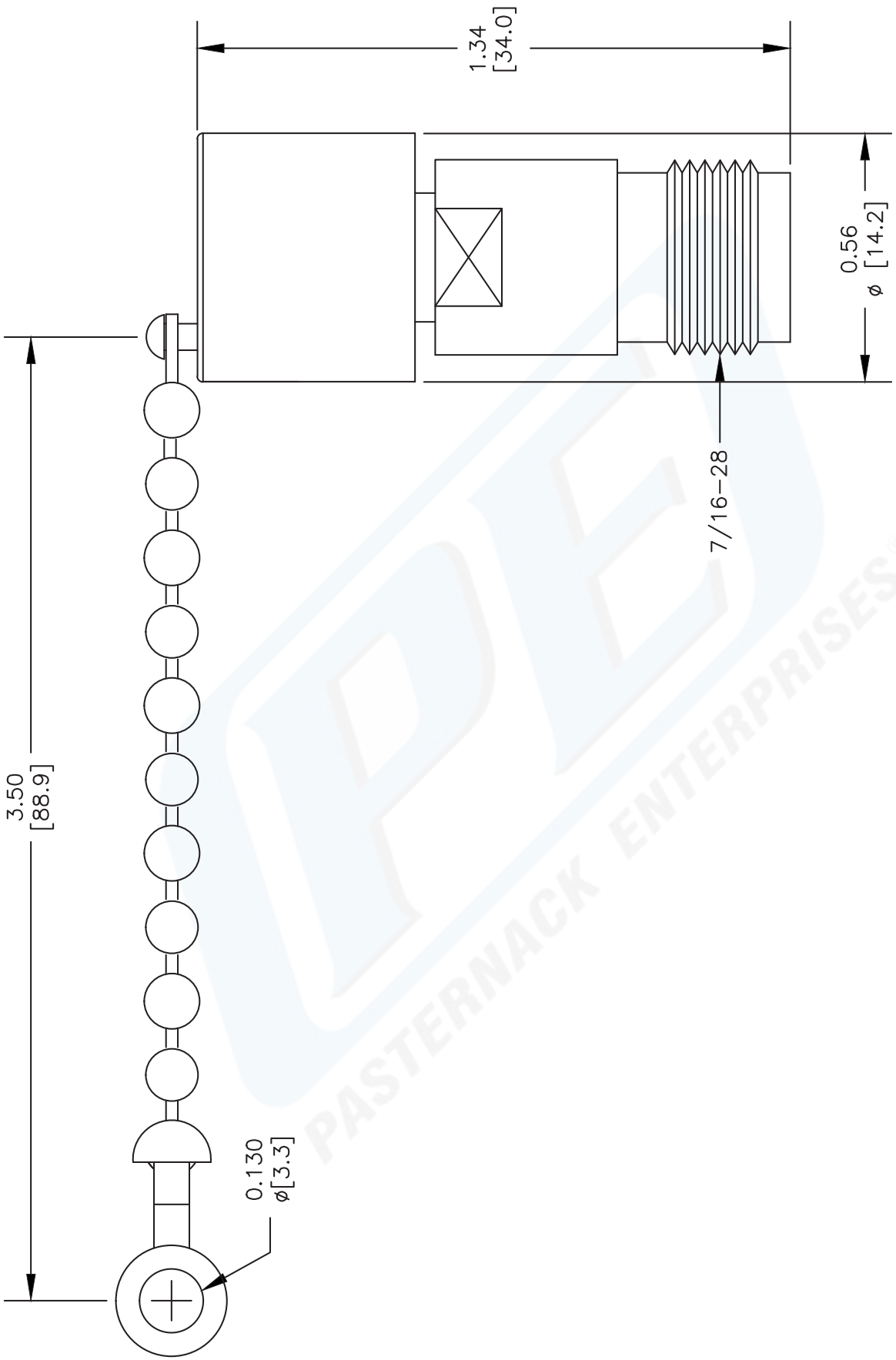

NOTES:
1. UNLESS OTHERWISE SPECIFIED ALL DIMENSIONS ARE NOMINAL.
2. ALL SPECIFICATIONS ARE SUBJECT TO CHANGE WITHOUT NOTICE AT ANY TIME.
3. DIMENSIONS ARE IN INCHES [mm].

CAD FILE	072202	SCALE N/A	SIZE A	127

DWG TITLE **PE6092**

FSCM NO. 53919

PASTERNACK®
Pasternack Enterprises, Inc.
P.O. Box 16759 | Irvine | CA | 92623
Phone: (949) 261-1920 | **Fax:** (949) 261-7451
Website: www.pasternack.com | **E-Mail:** sales@pasternack.com

© 2013 Pasternack Enterprises All Rights Reserved