PASTERNACK®
www.pasternack.com

RP TNC Male Connector Crimp/Solder Attachment For RG55, RG141, RG142, RG223, RG400



TECHNICAL DATA SHEET PE4663

RP TNC Male Connector Crimp/Solder Attachment For RG55, RG141, RG142, RG223, RG400

Configuration

Connector	TNC Male Reverse Polarity
Connector Interface Type	RG55,RG141,RG142,RG223,RG400
Cable Attachment Method (Shield/Contact)	Crimp/Solder
Body Style	Straight

Electrical Specifications

Frequency Range, GHz	DC to 11
Impedance, Ohms	50
Maximum Operating Voltage, Volts	500
Dielectric Withstanding Voltage, Vrms	1,500

Frequency 1

Frequency, GHz	DC to 10
VSWR	1.3:1

Mechanical Specifications

Temperature

Operating Range, deg C	-65 to +165

Size

Length, in [mm]	1.135 [28.83]
Width/Dia., in [mm]	0.59 [15]
Weight, lbs [g]	0.034 [15.42]

Connector

Type	TNC Male Reverse Polarity
Contact Material and Plating	Brass, Gold
Contact Plating Specification	30µ in. minimum
Coupling Nut Material and Plating	Brass, Nickel
Coupling Nut Plating Specification	100µ in. minimum
Body Material and Plating	Brass, Nickel
Body Plating Specification	100µ in. minimum
Dielectric Type	Teflon

Compliance Certifications (visit www.Pasternack.com for current document)

RoHS Compliant	Yes

Click the following link (or enter part number in “SEARCH” on website) to obtain additional part information including price, inventory and certifications: RP TNC Male Connector Crimp/Solder Attachment For RG55, RG141, RG142, RG223, RG400 PE4663

The information contained in this document is accurate to the best of our knowledge and representative of the part described herein. It may be necessary to make modifications to the part and/or the documentation of the part, in order to implement improvements. Pasternack reserves the right to make such changes as required. Unless otherwise stated, all specifications are nominal.

Pasternack Enterprises, Inc. • P.O. Box 16759, Irvine, CA 92623
Phone: (866) 727-8376 or (949) 261-1920 • **Fax:** (949) 261-7451
Sales@Pasternack.com • Techsupport@Pasternack.com

ISO 9001 : 2008 Registered

© 2013 Pasternack Enterprises All Rights Reserved

PASTERNACK®
www.pasternack.com

RP TNC Male Connector Crimp/Solder Attachment For RG55, RG141, RG142, RG223, RG400



TECHNICAL DATA SHEET PE4663

Plotted and Other Data

Notes: Values at 25 °C, sea level

RP TNC Male Connector Crimp/Solder Attachment For RG55, RG141, RG142, RG223, RG400 from Pasternack Enterprises has same day shipment for domestic and International orders. Our RF, microwave and fiber optic products maintain a 99% availability and are part of the broadest selection in the industry.

Click the following link (or enter part number in “SEARCH” on website) to obtain additional part information including price, inventory and certifications: RP TNC Male Connector Crimp/Solder Attachment For RG55, RG141, RG142, RG223, RG400 PE4663

URL: http://www.pasternack.com/tnc-male-reverse-polarity-rg55-rg141-rg142-rg223-rg400-connector-pe4663-p.aspx

The information contained in this document is accurate to the best of our knowledge and representative of the part described herein. It may be necessary to make modifications to the part and/or the documentation of the part, in order to implement improvements. Pasternack reserves the right to make such changes as required. Unless otherwise stated, all specifications are nominal.

Pasternack Enterprises, Inc. • P.O. Box 16759, Irvine, CA 92623
Phone: (866) 727-8376 or (949) 261-1920 • **Fax:** (949) 261-7451
Sales@Pasternack.com • Techsupport@Pasternack.com

ISO 9001 : 2008 Registered

© 2013 Pasternack Enterprises All Rights Reserved

PE4663 CAD Drawing

RP TNC Male Connector Crimp/Solder Attachment For
RG55, RG141, RG142, RG223, RG400

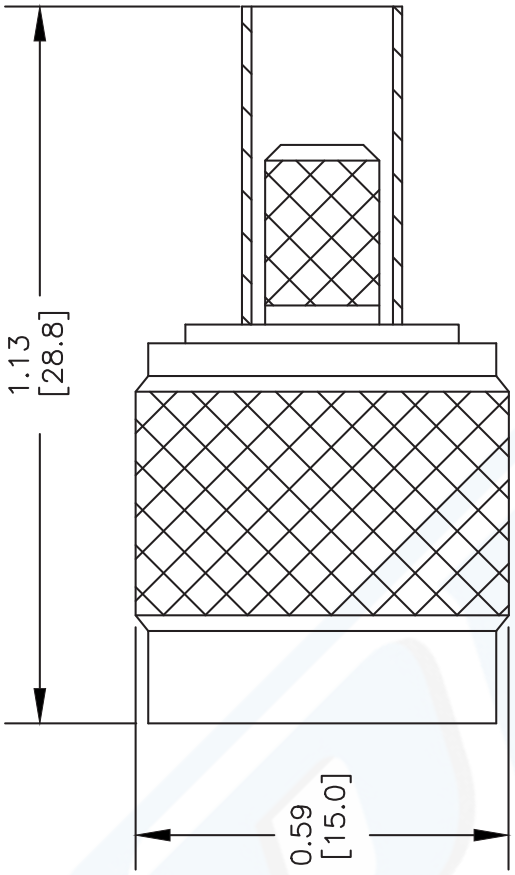

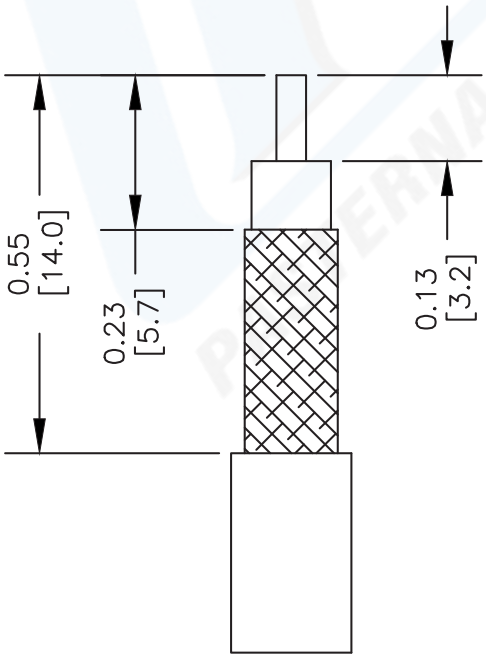

STRIPPING DIMENSIONS

CRIMP SIZE REQUIRED

CONTACT: .068" HEX CRIMP TOOL
FERRULE: .213" HEX CRIMP TOOL

NOTES:
1. UNLESS OTHERWISE SPECIFIED ALL DIMENSIONS ARE NOMINAL.
2. ALL SPECIFICATIONS ARE SUBJECT TO CHANGE WITHOUT NOTICE AT ANY TIME.
3. DIMENSIONS ARE IN INCHES [mm].
4. FITS MIL-C-17 AND EQUIVALENT CABLES.

CAD FILE	SCALE	SIZE	
052902	N/A	A	2231

DWG TITLE **PE4663**

FSCM NO. 53919

PASTERNACK®
Pasternack Enterprises, Inc.
P.O. Box 16759 | Irvine | CA | 92623
Phone: (949) 261-1920 | **Fax:** (949) 261-7451
Website: www.pasternack.com | **E-Mail:** sales@pasternack.com

© 2013 Pasternack Enterprises All Rights Reserved