PASTERNACK
www.pasternack.com

75 Ohm BNC Female Right Angle Bulkhead Connector Solder Attachment Solder Cup Terminal, .361 inch D Hole



TECHNICAL DATA SHEET PE4622

75 Ohm BNC Female Right Angle Bulkhead Connector Solder Attachment Solder Cup Terminal, .361 inch D Hole

Configuration

Connector	BNC Female
Connector Interface Type	Solder Cup
Cable Attachment Method (Shield/Contact)	Solder
Body Style	Right Angle
Mount Method	Bulkhead

Electrical Specifications

Impedance, Ohms	75

Mechanical Specifications

Size

Length, in [mm]	1.24 [31.5]
Width/Dia., in [mm]	0.595 [15]
Height, in [mm]	0.8 [20.32]
Weight, lbs [g]	0.034 [15.42]

Connector

Type	BNC Female
Contact Material and Plating	Silver
Body Material and Plating	Brass, Nickel
Dielectric Type	PTFE

Compliance Certifications (visit www.Pasternack.com for current document)

RoHS Compliant	Yes

Plotted and Other Data

Notes:	Values at 25 °C, sea level

75 Ohm BNC Female Right Angle Bulkhead Connector Solder Attachment Solder Cup Terminal, .361 inch D Hole from Pasternack Enterprises has same day shipment for domestic and International orders. Our RF, microwave and fiber optic products maintain a 99% availability and are part of the broadest selection in the industry.

Click the following link (or enter part number in “SEARCH” on website) to obtain additional part information including price, inventory and certifications: 75 Ohm BNC Female Right Angle Bulkhead Connector Solder Attachment Solder Cup Terminal, .361 inch D Hole PE4622

URL: http://www.pasternack.com/bnc-female-standard-solder-cup-terminal-connector-pe4622-p.aspx

The information contained in this document is accurate to the best of our knowledge and representative of the part described herein. It may be necessary to make modifications to the part and/or the documentation of the part, in order to implement improvements. Pasternack reserves the right to make such changes as required. Unless otherwise stated, all specifications are nominal.

Pasternack Enterprises, Inc. • P.O. Box 16759, Irvine, CA 92623
Phone: (866) 727-8376 or (949) 261-1920 • **Fax:** (949) 261-7451
Sales@Pasternack.com • Techsupport@Pasternack.com

ISO 9001 : 2008 Registered

© 2013 Pasternack Enterprises All Rights Reserved

PE4622 CAD Drawing

75 Ohm BNC Female Right Angle Bulkhead Connector Solder Attachment Solder Cup Terminal, .361 inch D Hole

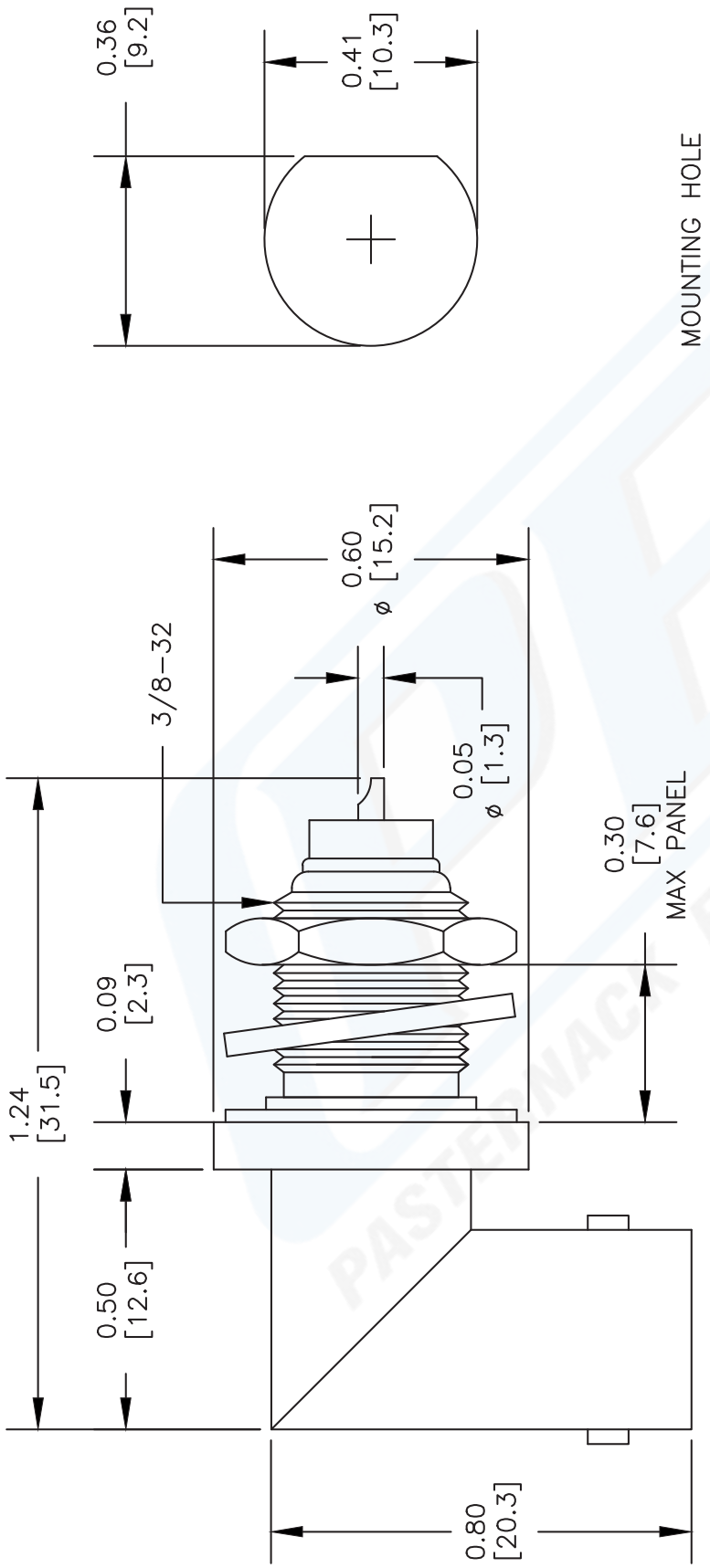

NOTES:
1. UNLESS OTHERWISE SPECIFIED ALL DIMENSIONS ARE NOMINAL.
2. ALL SPECIFICATIONS ARE SUBJECT TO CHANGE WITHOUT NOTICE AT ANY TIME.
3. DIMENSIONS ARE IN INCHES [mm].
4. FITS MIL-C-17 AND EQUIVALENT CABLES.

CAD FILE	SCALE	SIZE	
060302	N/A	A	127

DWG TITLE: **PE4622**

FSCM NO. 53919

PASTERNACK®
Pasternack Enterprises, Inc.
P.O. Box 16759 | Irvine | CA | 92623
Phone: (949) 261-1920 | **Fax:** (949) 261-7451
Website: www.pasternack.com | **E-Mail:** sales@pasternack.com

© 2013 Pasternack Enterprises All Rights Reserved