PASTERNACK®
THE ENGINEER'S RF SOURCE



2.92mm Female Connector Clamp Attachment Vertical Launch PCB, Removable Stripline Launch

RF Connectors
Technical Data Sheet

PE45450

Configuration

- 2.92mm Female Connector
- 50 Ohms
- Straight Body Geometry
- Vertical Launch Interface Type
- Clamp Attachment

Features

- Max. Operating Frequency 40 GHz
- Good VSWR of 1.3:1
- Gold Plated Beryllium Copper Contact
- Reusable vertical launch installation

Applications

- General Purpose Test
- PCB Applications
- Signal Integrity Measurement
- Chip Evaluations
- SERDES
- Vertical Launch Test Fixtures

Description

Pasternack's PE45450 2.92mm female connector with clamp attachment for vertical launch PCB is part of our full line of RF components available for same-day shipping. Our 2.92mm female connector operates up to a maximum frequency of 40 GHz and offers good VSWR of 1.3:1.

Our 2.92mm female connector PE45450 datasheet specifications and drawing with dimensions are shown below in this PDF. Pasternack's broad catalog of RF, microwave and millimeter wave connectors allows designers to configure and customize their signal connections however they like. Whether the need is to provide an I/O for a board design, or simply create a custom cable assembly configuration, Pasternack has the right connector for the job. Pasternack can also expertly build your custom cable assemblies for you and ship same-day.

Electrical Specifications

Description	Minimum	Typical	Maximum	Units
Frequency Range	DC		40	GHz
VSWR			1.3:1	

Electrical Specification Notes:
Actual VSWR performance is largely dependent on circuit board design. For optimal results, the connector and circuit launch geometry should be modeled using Electromagnetic Simulation tools.

Mechanical Specifications

Size	
Length	0.441 in [11.2 mm]
Width/Dia.	0.222 in [5.64 mm]
Height	0.39 in [9.91 mm]
Mating Cycles	500 Cycles

Click the following link (or enter part number in "SEARCH" on website) to obtain additional part information including price, inventory and certifications: 2.92mm Female Connector Clamp Attachment Vertical Launch PCB, Removable Stripline Launch PE45450

Pasternack Enterprises, Inc. • P.O. Box 16759, Irvine, CA 92623
Phone: (866) 727-8376 or (949) 261-1920 • **Fax:** (949) 261-7451
Sales@Pasternack.com • Techsupport@Pasternack.com

© 2018 Pasternack Enterprises All Rights Reserved



2.92mm Female Connector Clamp Attachment Vertical Launch PCB, Removable Stripline Launch

RF Connectors
Technical Data Sheet

PE45450

Material Specifications

Description	Material	Plating
Contact	Beryllium Copper	Gold
Insulation	Ultem1000	
Outer Conductor	Passivated Stainless Steel	
Body	Passivated Stainless Steel	

Mechanical Specification Notes:
Launch Pin is Gold Plated Beryllium Copper

Environmental Specifications

Compliance Certifications (see product page for current document)

Plotted and Other Data

Notes:

Click the following link (or enter part number in “SEARCH” on website) to obtain additional part information including price, inventory and certifications: 2.92mm Female Connector Clamp Attachment Vertical Launch PCB, Removable Stripline Launch PE45450

Pasternack Enterprises, Inc. • P.O. Box 16759, Irvine, CA 92623
Phone: (866) 727-8376 or (949) 261-1920 • **Fax:** (949) 261-7451
Sales@Pasternack.com • Techsupport@Pasternack.com

© 2018 Pasternack Enterprises All Rights Reserved



2.92mm Female Connector Clamp Attachment Vertical Launch PCB, Removable Stripline Launch

Assembly Instruction

STEP 1 :

Position vertical launch above substrate.

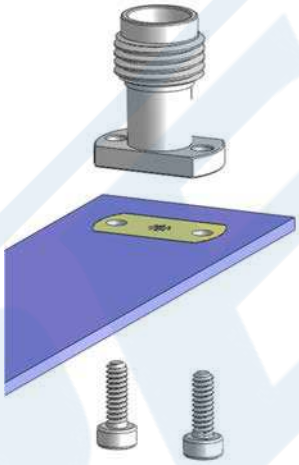

STEP 2:

Insert screws and tighten connector body against the substrate, while ensuring center pin is centered on the trace or landing pad.

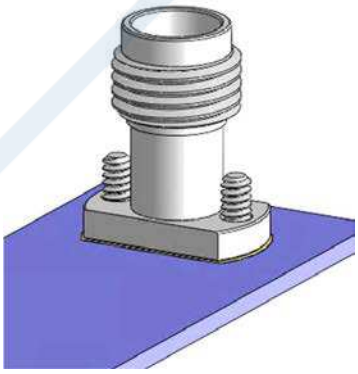

Click the following link (or enter part number in “SEARCH” on website) to obtain additional part information including price, inventory and certifications: 2.92mm Female Connector Clamp Attachment Vertical Launch PCB, Removable Stripline Launch PE45450

Pasternack Enterprises, Inc. • P.O. Box 16759, Irvine, CA 92623
Phone: (866) 727-8376 or (949) 261-1920 • **Fax:** (949) 261-7451
Sales@Pasternack.com • Techsupport@Pasternack.com

© 2018 Pasternack Enterprises All Rights Reserved



2.92mm Female Connector Clamp Attachment Vertical Launch PCB, Removable Stripline Launch

Typical Performance Data

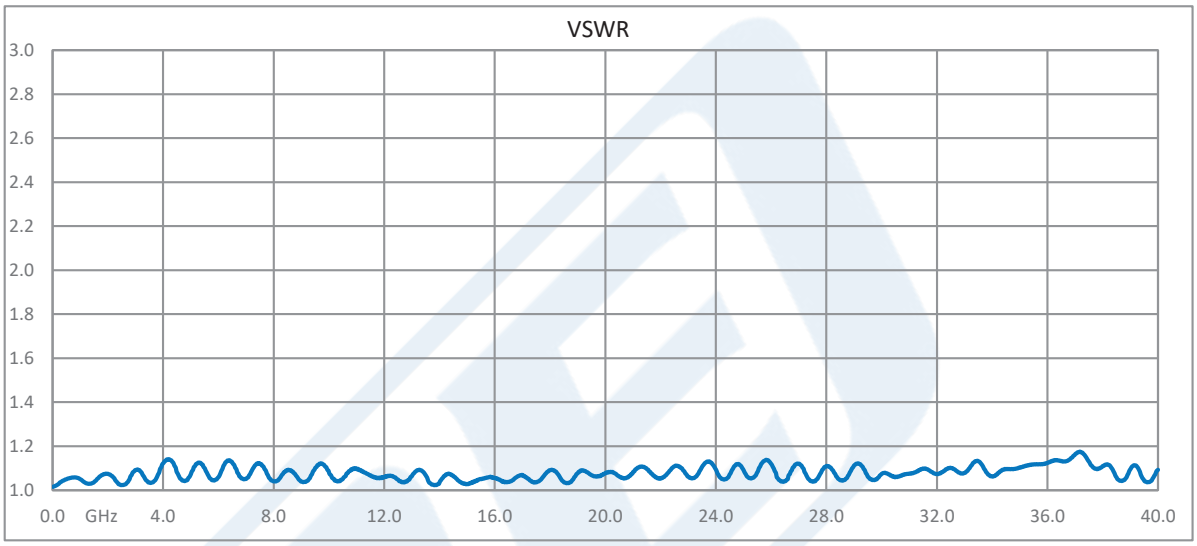

Test data taken with 2 connectors on both ends of test fixture

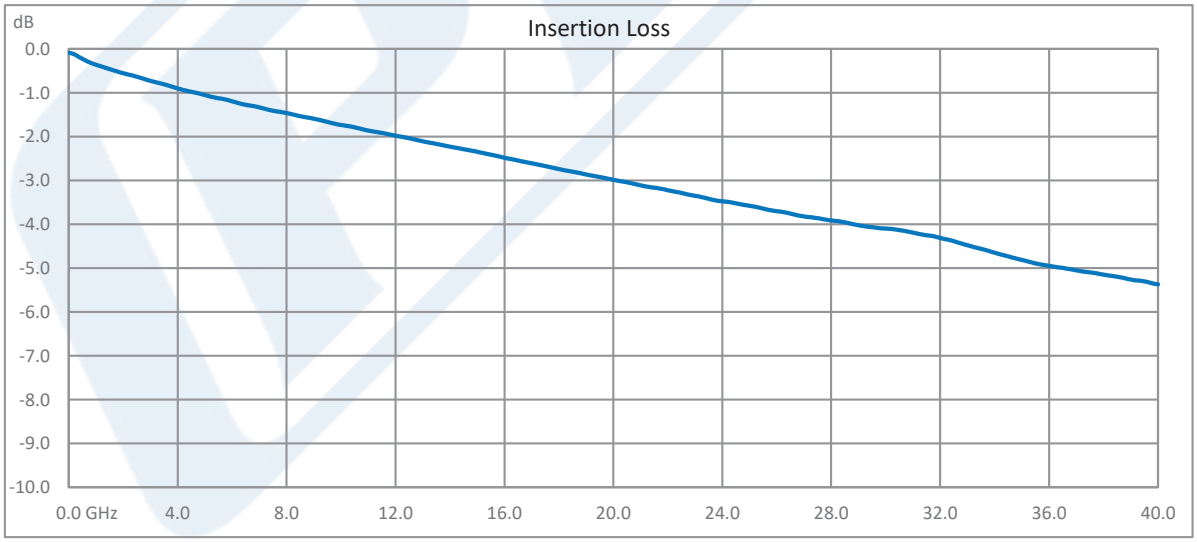

Test data taken with 2 connectors on both ends of test fixture

Click the following link (or enter part number in "SEARCH" on website) to obtain additional part information including price, inventory and certifications: 2.92mm Female Connector Clamp Attachment Vertical Launch PCB, Removable Stripline Launch PE45450

Pasternack Enterprises, Inc. • P.O. Box 16759, Irvine, CA 92623
Phone: (866) 727-8376 or (949) 261-1920 • **Fax:** (949) 261-7451
Sales@Pasternack.com • Techsupport@Pasternack.com

© 2018 Pasternack Enterprises All Rights Reserved

PASTERNACK®
THE ENGINEER'S RF SOURCE



2.92mm Female Connector Clamp Attachment Vertical Launch PCB, Removable Stripline Launch

RF Connectors
Technical Data Sheet

PE45450

2.92mm Female Connector Clamp Attachment Vertical Launch PCB, Removable Stripline Launch from Pasternack Enterprises has same day shipment for domestic and International orders. Our RF, microwave and millimeter wave products maintain a 99.4% availability and are part of the broadest selection in the industry.

Click the following link (or enter part number in "SEARCH" on website) to obtain additional part information including price, inventory and certifications: 2.92mm Female Connector Clamp Attachment Vertical Launch PCB, Removable Stripline Launch PE45450

URL: https://www.pasternack.com/2.92mm-female-vertical-launch-pcb-connector-pe45450-p.aspx

The information contained in this document is accurate to the best of our knowledge and representative of the part described herein. It may be necessary to make modifications to the part and/or the documentation of the part, in order to implement improvements. Pasternack reserves the right to make such changes as required. Unless otherwise stated, all specifications are nominal. Pasternack does not make any representation or warranty regarding the suitability of the part described herein for any particular purpose, and Pasternack does not assume any liability arising out of the use of any part or documentation.

Pasternack Enterprises, Inc. • P.O. Box 16759, Irvine, CA 92623
Phone: (866) 727-8376 or (949) 261-1920 • **Fax:** (949) 261-7451
Sales@Pasternack.com • Techsupport@Pasternack.com

© 2018 Pasternack Enterprises All Rights Reserved

© 2018 Pasternack Enterprises All Rights Reserved

PE45450 CAD Drawing

2.92mm Female Connector Clamp Attachment Vertical Launch PCB, Removable Stripline Launch

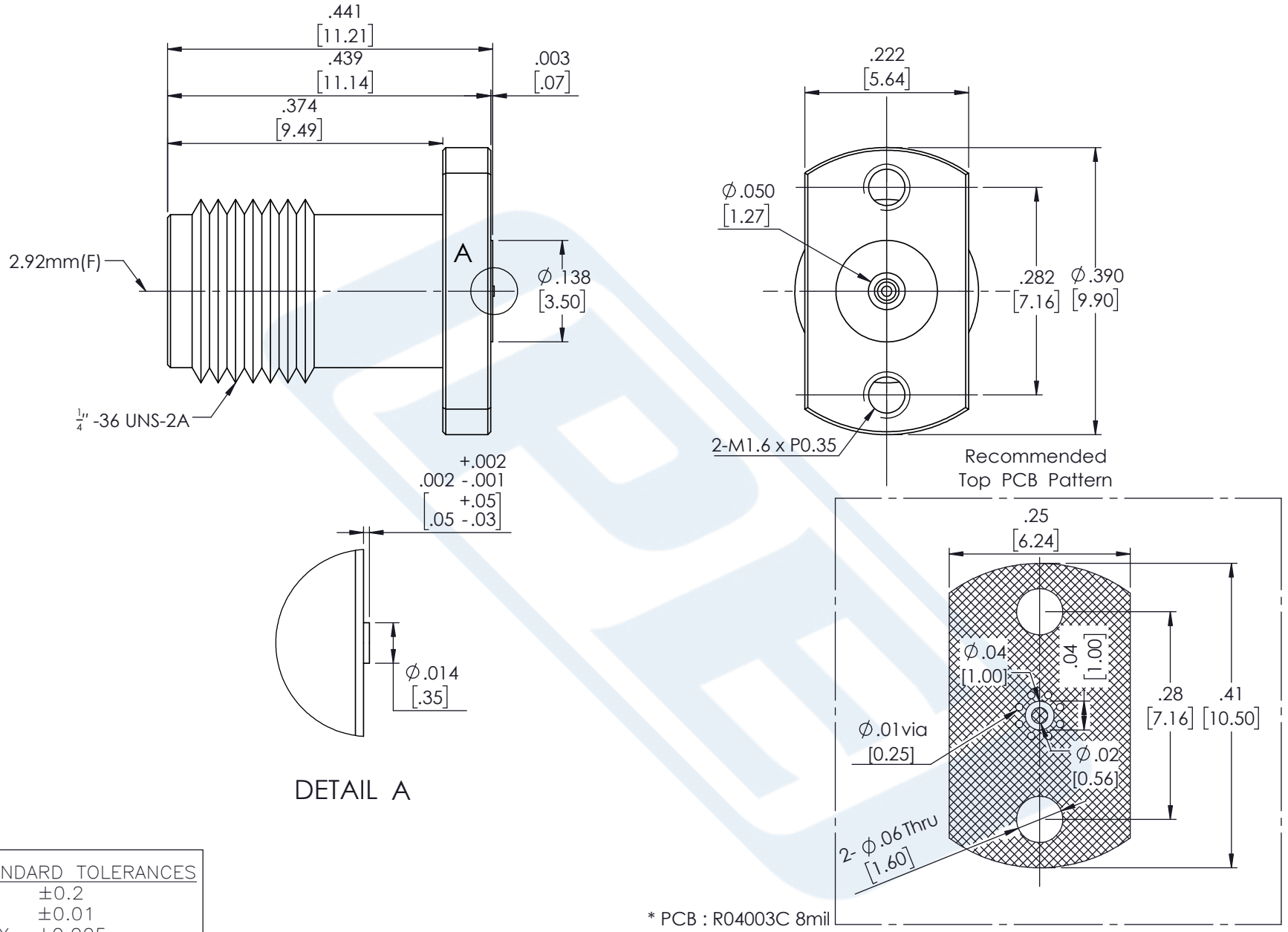

STANDARD TOLERANCES	
.X	±0.2
.XX	±0.01
.XXX	±0.005

*STANDARD TOLERANCES APPLY ONLY TO DIMENSIONS IN INCHES

PASTERNACK
THE ENGINEER'S RF SOURCE
Pasternack Enterprises, Inc.
P.O. Box 16759 | Irvine | CA | 92623
Phone: (949) 261-1920 | **Fax:** (949) 261-7451
Website: www.pasternack.com | **E-Mail:** sales@pasternack.com

DWG TITLE
PE45450

NOTES:
1. UNLESS OTHERWISE SPECIFIED ALL DIMENSIONS ARE NOMINAL.
2. ALL SPECIFICATIONS ARE SUBJECT TO CHANGE WITHOUT NOTICE AT ANY TIME.
3. DIMENSIONS ARE IN INCHES [mm].

CAGE CODE 53919	CAD FILE 06/01/18	SCALE N/A	SIZE A	CN2379