PASTERNACK®
THE ENGINEER'S RF SOURCE



# SMP Male Limited Detent Connector Solder Attachment Thru Hole PCB .127 inch Pin Length

## TECHNICAL DATA SHEET PE44936

### Configuration

| | |
|---|---|
| Connector | SMP Male, Limited Detent |
| Connector Specification | MIL-STD-348 |
| Connector Interface Type | Thru Hole |
| Attachment Method (Shield/Contact) | Solder |
| Body Style | Straight |

### Electrical Specifications

| | |
|---|---|
| Impedance | 50 Ohms |

### Mechanical Specifications

**Size**

| | |
|---|---|
| Length | 0.267 in [6.78 mm] |
| Width/Dia. | 0.187 in [4.75 mm] |
| Weight | 0.082 lbs [37.19 g] |

**Connector**

| | |
|---|---|
| Type | SMP Male |
| Contact Material and Plating | Beryllium Copper, Gold |
| Contact Plating Specification | MIL-G-45204 |
| Body Material and Plating | Beryllium Copper, Gold |
| Body Plating Specification | MIL-G-45204 |
| Dielectric Type | Ultem |

### Compliance Certifications (visit www.Pasternack.com for current document)

RoHS Compliant

Click the following link (or enter part number in "SEARCH" on website) to obtain additional part information including price, inventory and certifications: SMP Male Limited Detent Connector Solder Attachment Thru Hole PCB .127 inch Pin Length PE44936

Pasternack Enterprises, Inc. • P.O. Box 16759, Irvine, CA 92623
**Phone:** (866) 727-8376 or (949) 261-1920 • **Fax:** (949) 261-7451
Sales@Pasternack.com • Techsupport@Pasternack.com

ISO 9001 : 2008 Registered

© 2014 Pasternack Enterprises All Rights Reserved



# SMP Male Limited Detent Connector Solder Attachment Thru Hole PCB .127 inch Pin Length

## TECHNICAL DATA SHEET PE44936

### Plotted and Other Data

Notes:

- Values at +25 °C, sea level

SMP Male Limited Detent Connector Solder Attachment Thru Hole PCB .127 inch Pin Length from Pasternack Enterprises has same day shipment for domestic and International orders. Our RF, microwave and millimeter wave products maintain a 99% availability and are part of the broadest selection in the industry.

Click the following link (or enter part number in "SEARCH" on website) to obtain additional part information including price, inventory and certifications: SMP Male Limited Detent Connector Solder Attachment Thru Hole PCB .127 inch Pin Length PE44936

URL: http://www.pasternack.com/smp-male-standard-thru-hole-pcb-connector-pe44936-p.aspx

The information contained in this document is accurate to the best of our knowledge and representative of the part described herein. It may be necessary to make modifications to the part and/or the documentation of the part, in order to implement improvements. Pasternack reserves the right to make such changes as required. Unless otherwise stated, all specifications are nominal. Pasternack does not make any representation or warranty regarding the suitability of the part described herein for any particular purpose, and Pasternack does not assume any liability arising out of the use of any part or documentation.

Pasternack Enterprises, Inc. • P.O. Box 16759, Irvine, CA 92623
**Phone:** (866) 727-8376 or (949) 261-1920 • **Fax:** (949) 261-7451
Sales@Pasternack.com • Techsupport@Pasternack.com

ISO 9001 : 2008 Registered

© 2014 Pasternack Enterprises All Rights Reserved

# PE44936 CAD Drawing

SMP Male Limited Detent Connector Solder Attachment
Thru Hole PCB .127 inch Pin Length

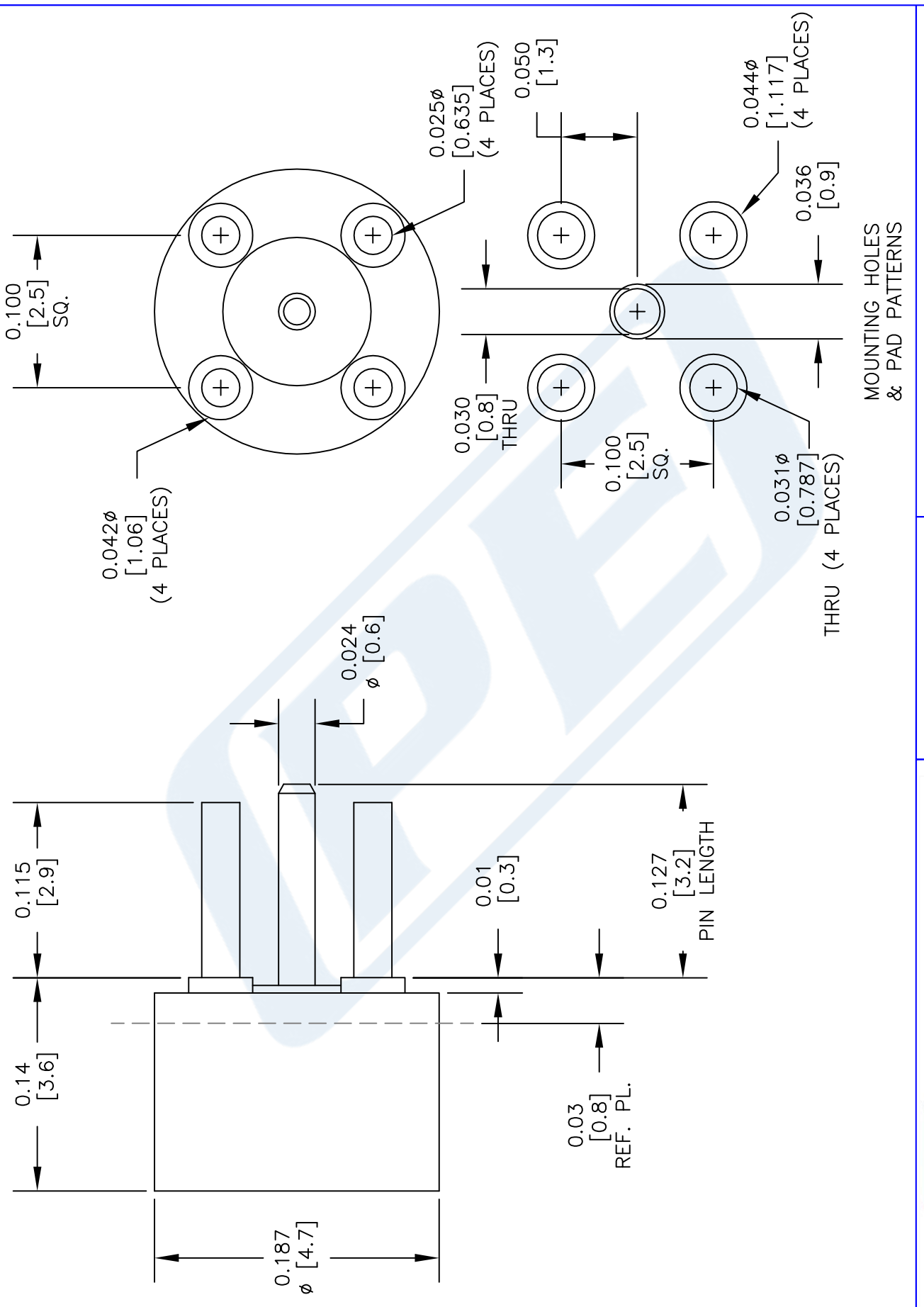


NOTES:
1. UNLESS OTHERWISE SPECIFIED ALL DIMENSIONS ARE NOMINAL.
2. ALL SPECIFICATIONS ARE SUBJECT TO CHANGE WITHOUT NOTICE AT ANY TIME.
3. DIMENSIONS ARE IN INCHES [mm].

| DWG TITLE | CAD FILE | SCALE | SIZE | |
|---|---|---|---|---|
| PE44936 | 103013 | N/A | A | 150 |
| FSCM NO. 53919 | | | | |


PASTERNACK®
Pasternack Enterprises, Inc.
P.O. Box 16759 | Irvine | CA | 92623
**Phone:** (949) 261-1920 | **Fax:** (949) 261-7451
**Website:** www.pasternack.com | **E-Mail:** sales@pasternack.com


© 2014 Pasternack Enterprises All Rights Reserved