PASTERNACK®
THE ENGINEER'S RF SOURCE



SMP Male Full Detent Hermetically Sealed Connector Solder Attachment Solder Mount Pin Terminal .150 inch Pin Length

TECHNICAL DATA SHEET PE44921

Configuration

Connector	SMP Male, Full Detent
Connector Specification	DESC 94007
Connector Interface Type	Pin
Attachment Method (Shield/Contact)	Solder
Body Style	Straight
Mount Method	Solder
Isolated Ground / Hermetic	Hermetically Sealed

Electrical Specifications

Frequency Range	DC to 40 GHz
Impedance	50 Ohms

Mechanical Specifications

Temperature

Operating Range	-55 to +125 deg C

Size

Length	0.33 in [8.38 mm]
Width/Dia.	0.164 in [4.17 mm]
Weight	0.082 lbs [37.19 g]

Connector

Type	SMP Male
Contact Material and Plating	Kovar, Gold
Contact Plating Specification	MIL-G-45204
Body Material and Plating	Kovar, Gold
Body Plating Specification	MIL-G-45204

Compliance Certifications (visit www.Pasternack.com for current document)

RoHS Compliant

Click the following link (or enter part number in "SEARCH" on website) to obtain additional part information including price, inventory and certifications: SMP Male Full Detent Hermetically Sealed Connector Solder Attachment Solder Mount Pin Terminal .150 inch Pin Length PE44921

Pasternack Enterprises, Inc. • P.O. Box 16759, Irvine, CA 92623
Phone: (866) 727-8376 or (949) 261-1920 • **Fax:** (949) 261-7451
Sales@Pasternack.com • Techsupport@Pasternack.com

ISO 9001 : 2008 Registered

© 2014 Pasternack Enterprises All Rights Reserved



SMP Male Full Detent Hermetically Sealed Connector Solder Attachment Solder Mount Pin Terminal .150 inch Pin Length

TECHNICAL DATA SHEET PE44921

Plotted and Other Data

Notes:

- Values at +25 °C, sea level

SMP Male Full Detent Hermetically Sealed Connector Solder Attachment Solder Mount Pin Terminal .150 inch Pin Length from Pasternack Enterprises has same day shipment for domestic and International orders. Our RF, microwave and millimeter wave products maintain a 99% availability and are part of the broadest selection in the industry.

Click the following link (or enter part number in "SEARCH" on website) to obtain additional part information including price, inventory and certifications: SMP Male Full Detent Hermetically Sealed Connector Solder Attachment Solder Mount Pin Terminal .150 inch Pin Length PE44921

URL: http://www.pasternack.com/smp-male-standard-pin-terminal-connector-pe44921-p.aspx

The information contained in this document is accurate to the best of our knowledge and representative of the part described herein. It may be necessary to make modifications to the part and/or the documentation of the part, in order to implement improvements. Pasternack reserves the right to make such changes as required. Unless otherwise stated, all specifications are nominal. Pasternack does not make any representation or warranty regarding the suitability of the part described herein for any particular purpose, and Pasternack does not assume any liability arising out of the use of any part or documentation.

Pasternack Enterprises, Inc. • P.O. Box 16759, Irvine, CA 92623
Phone: (866) 727-8376 or (949) 261-1920 • **Fax:** (949) 261-7451
Sales@Pasternack.com • Techsupport@Pasternack.com

ISO 9001 : 2008 Registered

© 2014 Pasternack Enterprises All Rights Reserved

PE44921 CAD Drawing

SMP Male Full Detent Hermetically Sealed Connector Solder Attachment Solder Mount Pin Terminal .150 inch Pin Length

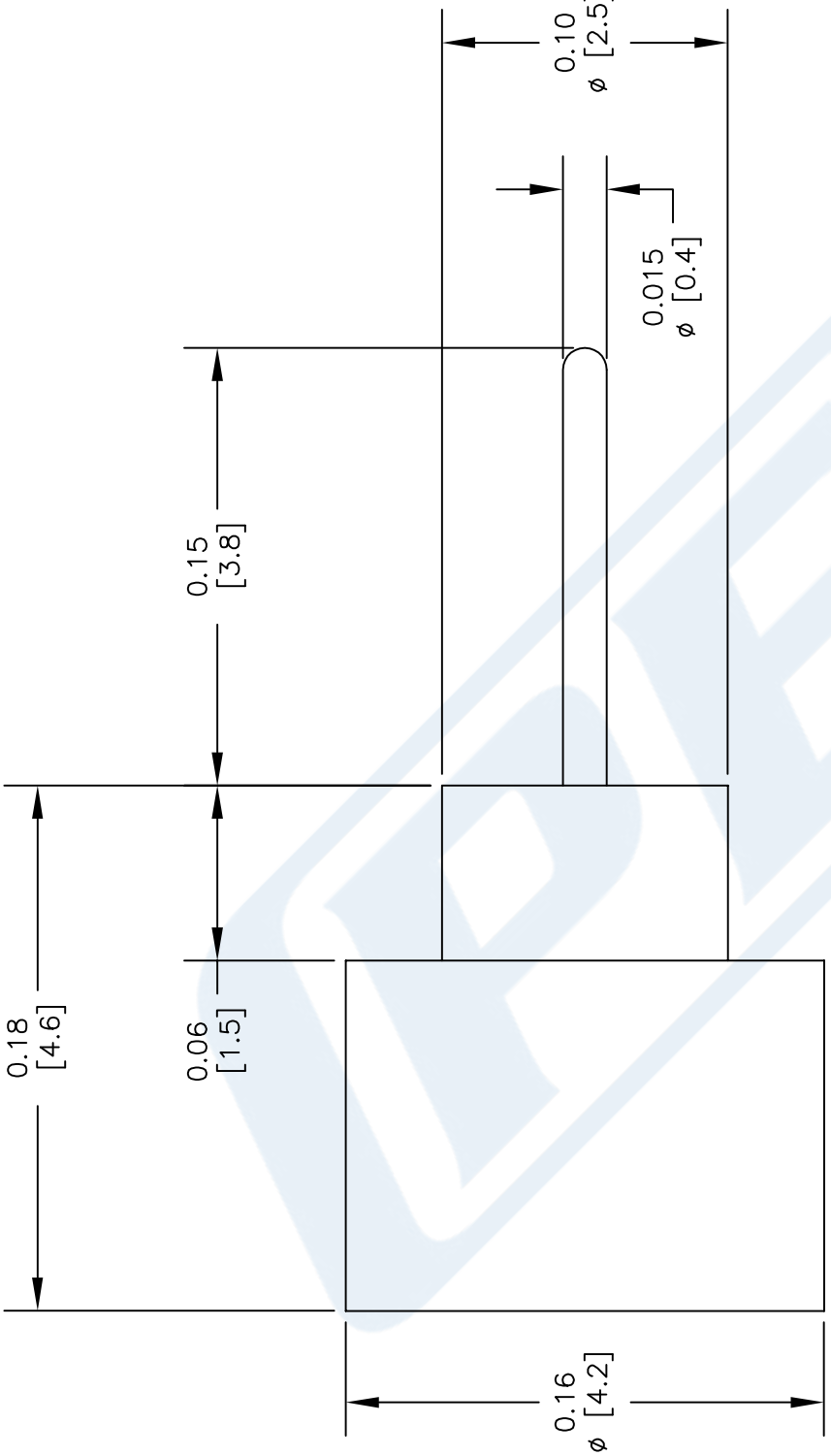

NOTES:
1. UNLESS OTHERWISE SPECIFIED ALL DIMENSIONS ARE NOMINAL.
2. ALL SPECIFICATIONS ARE SUBJECT TO CHANGE WITHOUT NOTICE AT ANY TIME.
3. DIMENSIONS ARE IN INCHES [mm].

DWG TITLE PE44921	CAD FILE 022714	SCALE N/A	SIZE A
FSCM NO. 53919			150

PASTERNACK THE ENGINEER'S RF SOURCE
Pasternack Enterprises, Inc.
P.O. Box 16759 | Irvine | CA | 92623
Phone: (949) 261-1920 | **Fax:** (949) 261-7451
Website: www.pasternack.com | **E-Mail:** sales@pasternack.com

© 2014 Pasternack Enterprises All Rights Reserved