MATERIALS	
BODY	BRASS NICKEL PLATED
CONTACT	GOLD PLATED
INSULATOR	PTFE
FERRULE	GOLD PLATED

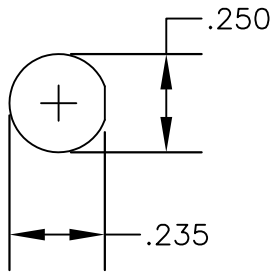

MOUNTING HOLE

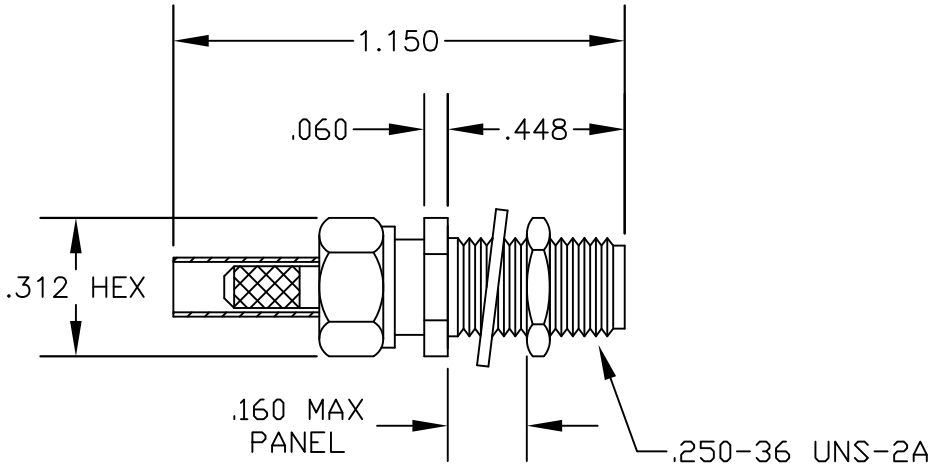

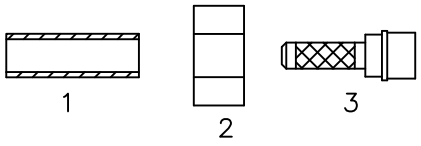

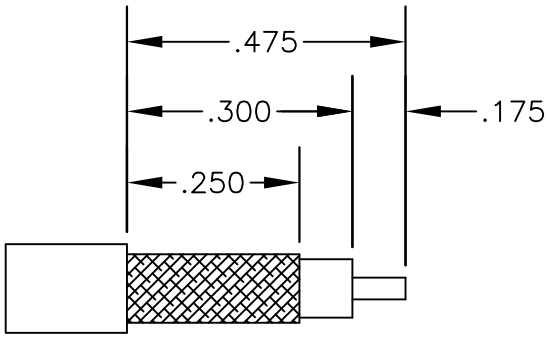

STRIPPING DIMENSIONS

ASSEMBLY PROCEDURES

1. STRIP CABLE AS SHOWN. DO NOT NICK CENTER CONDUCTOR. TIN CENTER CONDUCTOR.

2. SLIDE FERRULE (1) & CLAMP NUT (2) OVER CABLE. FLAIR BRAID & SLIDE WEDGE ASSEMBLY (3) UNDER BRAID WITH CENTER CONDUCTOR PROTRUDING THROUGH HOLE IN INSULATOR. SLIDE FERRULE (1) OVER BRAID & AGAINST EXTENSION. SOLDER FERRULE (1) TO BRAID THROUGH HOLE IN FERRULE.

3. SOLDER CONTACT TO CENTER CONDUCTOR. CLEAN. INSERT CABLE ASSEMBLY INTO BODY & TIGHTEN.

PASTERNACK ENTERPRISES®
ESTABLISHED 1972

PASTERNACK ENTERPRISES, INC.
P.O BOX 16759, IRVINE, CA 92623
PHONE (949) 261-1920 FAX (949) 261-7451
WEB ADDRESS: www.pasternack.com
E-MAIL ADDRESS: sales@pasternack.com

COAXIAL & FIBER OPTICS

DWG TITLE	DES.
PE4428	SMA FEMALE, BULKHEAD, SOLDER ATTACHMENT FOR RG174, RG188 & RG316 (CAPTIVE CONTACT)

SIZE A	FSCM NO. 53919	CAD FILE 051402	SCALE N/A		127

NOTES:
1. UNLESS OTHERWISE SPECIFIED ALL DIMENSIONS ARE NOMINAL.
2. ALL SPECIFICATIONS ARE SUBJECT TO CHANGE WITHOUT NOTICE AT ANY TIME.