PASTERNACK®
www.pasternack.com

2.92mm Female Connector Field Replaceable Attachment 2 Hole Flange 0.012 inch Pin, .481 inch Hole Spacing



TECHNICAL DATA SHEET PE44229

2.92mm Female Connector Field Replaceable Attachment 2 Hole Flange 0.012 inch Pin, .481 inch Hole Spacing

Configuration

Connector	2.92mm Female
Connector Interface Type	0.012 inch Pin
Cable Attachment Method (Shield/Contact)	Field Replaceable
Body Style	Straight
Mount Method	2 Hole Flange

Electrical Specifications

Frequency Range, GHz	DC to 40
Impedance, Ohms	50
Maximum VSWR	1.25:1
Maximum Insertion Loss, dB	0.31

Mechanical Specifications

Size

Length, in [mm]	0.378 [9.6]
Width/Dia., in [mm]	0.223 [6]
Height, in [mm]	0.625 [15.88]
Weight, lbs [g]	0.006 [2.72]

Connector

Type	2.92mm Female
Contact Material and Plating	Beryllium Copper, Gold
Contact Plating Specification	MIL-G-45204, Type II, Class 1
Body Material and Plating	Passivated Stainless Steel
Body Plating Specification	ASTM A380
Dielectric Type	PPO

Compliance Certifications (visit www.Pasternack.com for current document)

RoHS Compliant	Yes

Plotted and Other Data

Notes:	Values at 25 °C, sea level

URL: http://www.pasternack.com/2.92mm-female-standard-0.012-pin-connector-pe44229-p.aspx

2.92mm Female Connector Field Replaceable Attachment 2 Hole Flange 0.012 inch Pin, .481 inch Hole Spacing from Pasternack Enterprises has same day shipment for domestic and International orders. We maintain 99% availability of the industry's broadest selection of RF, microwave and fiber optic products.

The information contained in this document is accurate to the best of our knowledge and representative of the part described herein. It may be necessary to make modifications to the part and/or the documentation of the part, in order to implement improvements. Pasternack reserves the right to make such changes as required. Unless otherwise stated, all specifications are nominal.

Pasternack Enterprises, Inc. • P.O. Box 16759, Irvine, CA 92623
Phone: (866) 727-8376 or (949) 261-1920 • **Fax:** (949) 261-7451
Sales@Pasternack.com • Techsupport@Pasternack.com

ISO 9001 : 2008 Registered

© 2013 Pasternack Enterprises All Rights Reserved

PE44229 CAD Drawing

2.92mm Female Connector Field Replaceable Attachment
2 Hole Flange 0.012 inch Pin, .481 inch Hole Spacing

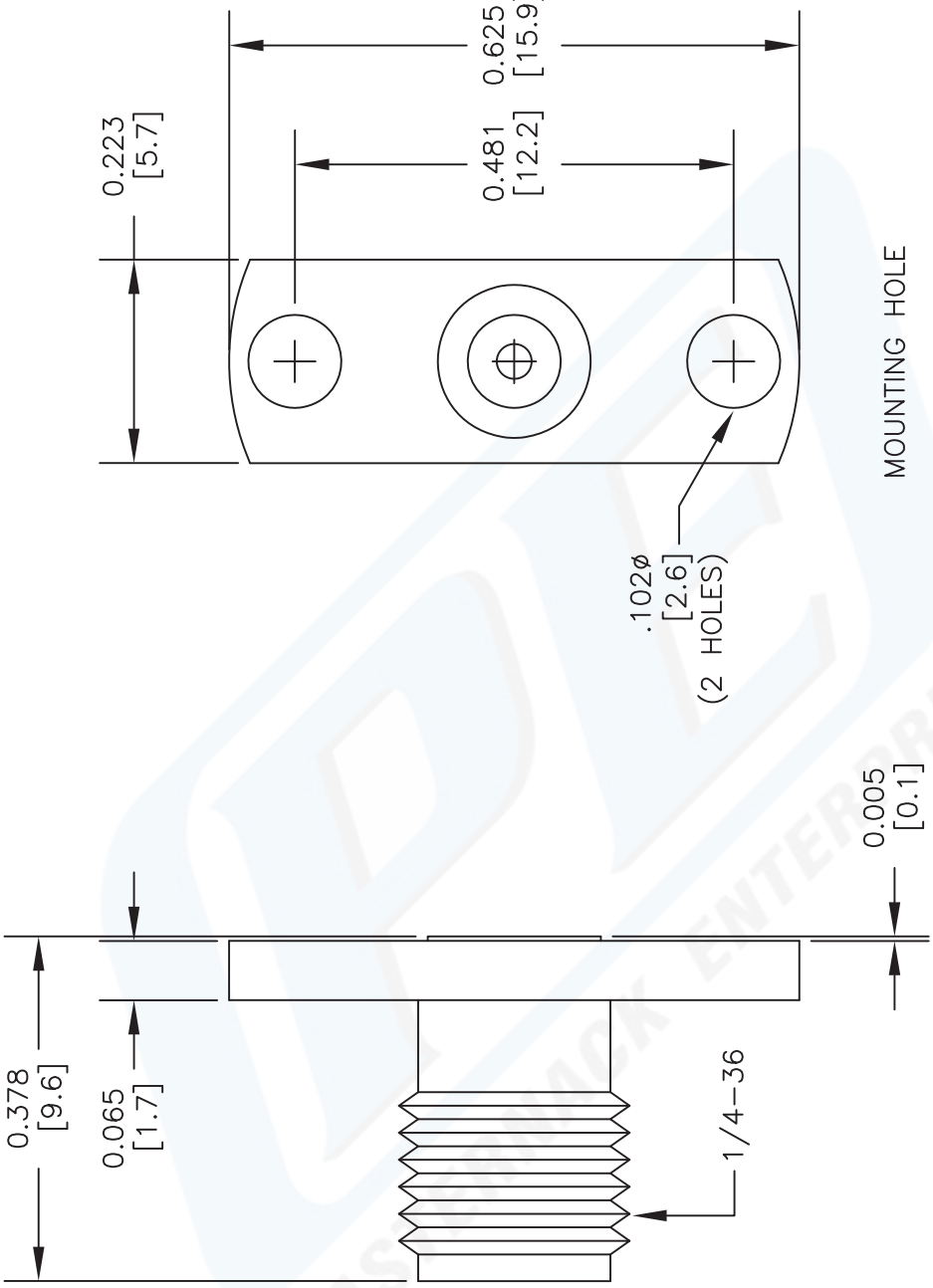

NOTES:
1. UNLESS OTHERWISE SPECIFIED ALL DIMENSIONS ARE NOMINAL.
2. ALL SPECIFICATIONS ARE SUBJECT TO CHANGE WITHOUT NOTICE AT ANY TIME.
3. DIMENSIONS ARE IN INCHES [mm].
4. FITS MIL-C-17 AND EQUIVALENT CABLES.

CAD FILE	062403	SCALE N/A	SIZE A	2233

DWG TITLE **PE44229**

FSCM NO. 53919

PASTERNACK®
Pasternack Enterprises, Inc.
P.O. Box 16759 | Irvine | CA | 92623
Phone: (949) 261-1920 | **Fax:** (949) 261-7451
Website: www.pasternack.com | **E-Mail:** sales@pasternack.com

© 2012 Pasternack Enterprises All Rights Reserved