PASTERNACK®
www.pasternack.com

SMA Female Connector Solder Attachment 2 Hole Flange Tab Terminal, .481 inch Hole Spacing



TECHNICAL DATA SHEET PE4370

SMA Female Connector Solder Attachment 2 Hole Flange Tab Terminal, .481 inch Hole Spacing

Configuration

Connector	SMA Female
Connector Interface Type	Tab
Cable Attachment Method (Shield/Contact)	Solder
Body Style	Straight
Mount Method	2 Hole Flange

Electrical Specifications

Impedance, Ohms	50

Mechanical Specifications

Size

Length, in [mm]	0.475 [12.07]
Width/Dia., in [mm]	0.223 [6]
Height, in [mm]	0.625 [15.88]
Weight, lbs [g]	0.005 [2.27]

Connector

Type	SMA Female
Contact Material and Plating	Beryllium Copper, Gold
Body Material and Plating	Stainless Steel, Gold
Dielectric Type	PTFE

Compliance Certifications (visit www.Pasternack.com for current document)

RoHS Compliant	Yes

Plotted and Other Data

Notes:	Values at 25 °C, sea level

URL: http://www.pasternack.com/sma-female-standard-tab-terminal-connector-pe4370-p.aspx

SMA Female Connector Solder Attachment 2 Hole Flange Tab Terminal, .481 inch Hole Spacing from Pasternack Enterprises has same day shipment for domestic and International orders. We maintain 99% availability of the industry's broadest selection of RF, microwave and fiber optic products.

The information contained in this document is accurate to the best of our knowledge and representative of the part described herein. It may be necessary to make modifications to the part and/or the documentation of the part, in order to implement improvements. Pasternack reserves the right to make such changes as required. Unless otherwise stated, all specifications are nominal.

Pasternack Enterprises, Inc. • P.O. Box 16759, Irvine, CA 92623
Phone: (866) 727-8376 or (949) 261-1920 • **Fax:** (949) 261-7451
Sales@Pasternack.com • Techsupport@Pasternack.com

ISO 9001 : 2008 Registered

© 2013 Pasternack Enterprises All Rights Reserved

PE4370 CAD Drawing

SMA Female Connector Solder Attachment 2 Hole Flange
Tab Terminal, .481 inch Hole Spacing

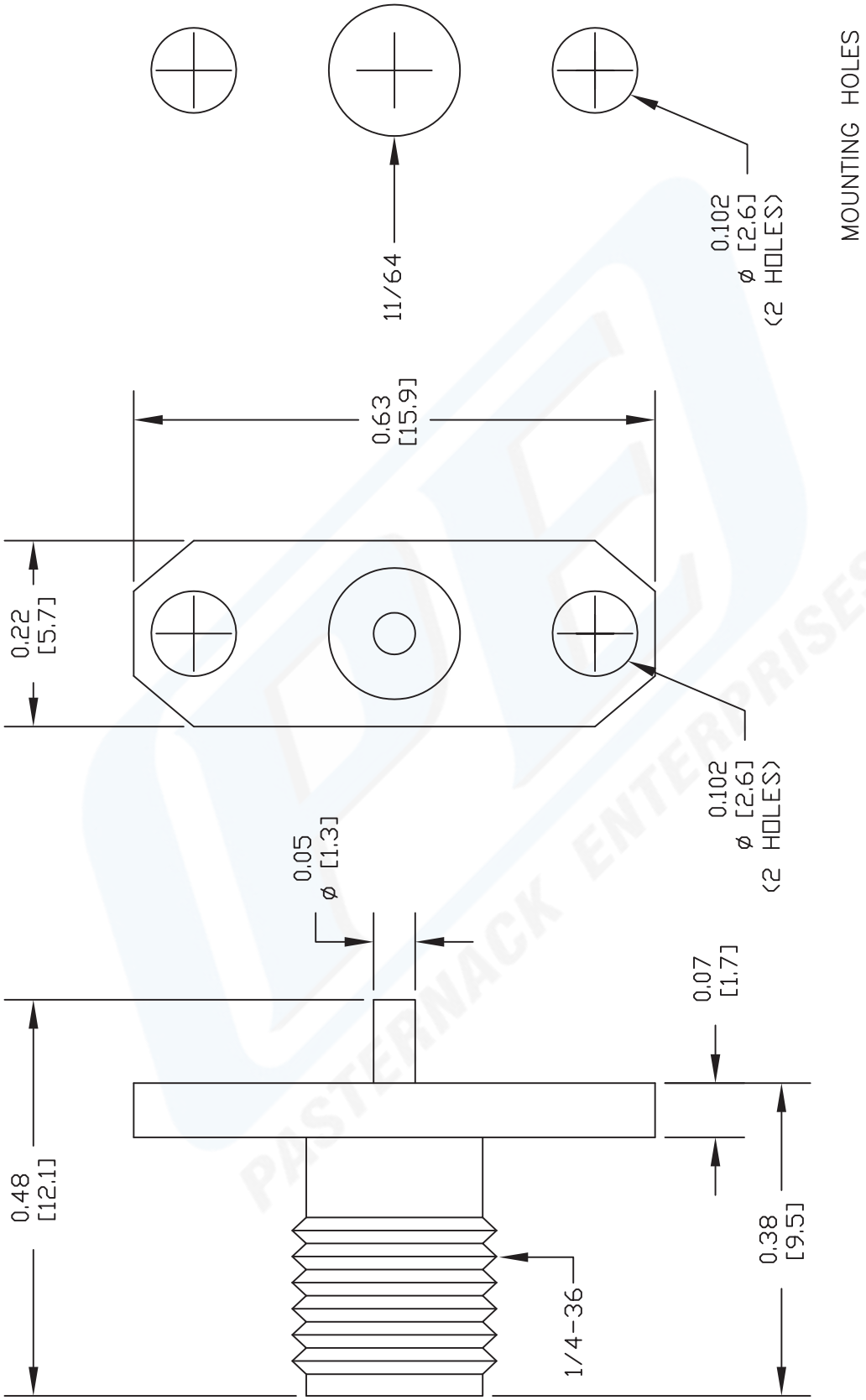

NOTES:
1. UNLESS OTHERWISE SPECIFIED ALL DIMENSIONS ARE NOMINAL.
2. ALL SPECIFICATIONS ARE SUBJECT TO CHANGE WITHOUT NOTICE AT ANY TIME.
3. DIMENSIONS ARE IN INCHES [mm].

CAD FILE	SCALE	SIZE	
020613-A	N/A	A	2231

DWG TITLE **PE4370**

FSCM NO. 53919

PASTERNACK®
Pasternack Enterprises, Inc.
P.O. Box 16759 | Irvine | CA | 92623
Phone: (949) 261-1920 | **Fax:** (949) 261-7451
Website: www.pasternack.com | **E-Mail:** sales@pasternack.com

© 2012 Pasternack Enterprises All Rights Reserved