Product Specification

PE4302

50 Ω RF Digital Attenuator
6-bit, 31.5 dB, DC – 4.0 GHz

Features

- Attenuation: 0.5 dB steps to 31.5 dB
- Flexible parallel and serial programming interfaces
- Unique power-up state selection
- Positive CMOS control logic
- High attenuation accuracy and linearity over temperature and frequency
- Very low power consumption
- Single-supply operation
- 50 Ω impedance
- Packaged in a 20 lead 4x4mm QFN

Product Description

The PE4302 is a high linearity, 6-bit RF Digital Step Attenuator (DSA) covering a 31.5 dB attenuation range in 0.5 dB steps. This 50-ohm RF DSA provides both parallel and serial CMOS control interface operates on a single 3-volt supply and maintains high attenuation accuracy over frequency and temperature. It also has a unique control interface that allows the user to select an initial attenuation state at power-up. The PE4302 exhibits very low insertion loss and low power consumption. This functionality is delivered in a 4x4 mm QFN footprint.

The PE4302 is manufactured on Peregrine's UltraCMOS™ process, a patented variation of silicon-on-insulator (SOI) technology on a sapphire substrate, offering the performance of GaAs with the economy and integration of conventional CMOS.

Figure 1. Functional Schematic Diagram

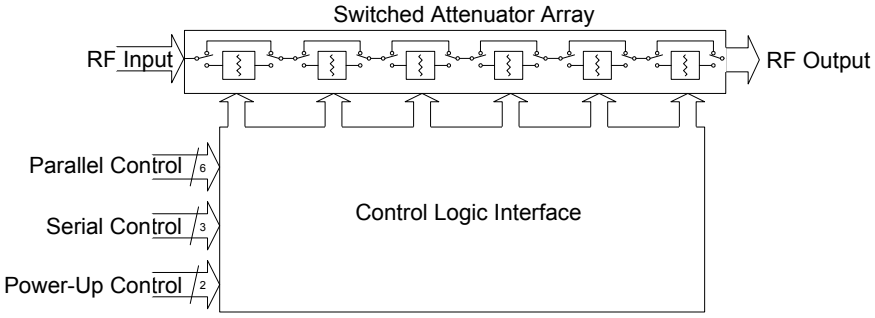

Figure 2. Package Type

4x4 mm 20-Lead QFN



Table 1. Electrical Specifications @ +25°C, V_{DD} = 3.0 V

Parameter	Test Conditions	Frequency	Minimum	Typical	Maximum	Units
Operation Frequency			DC		4000	MHz
Insertion Loss[2]		DC - 2.2 GHz	-	1.5	1.75	dB
Attenuation Accuracy	Any Bit or Bit Combination	DC ≤ 1.0 GHz 1.0 < 2.2 GHz	-	-	±(0.10 + 3% of atten setting) ±(0.15 + 5% of atten setting)	dB dB
1 dB Compression[3]		1 MHz - 2.2 GHz	30	34	-	dBm
Input IP3[1,2]	Two-tone inputs +18 dBm	1 MHz - 2.2 GHz	-	52	-	dBm
Return Loss		DC - 2.2 GHz	15	20	-	dB
Switching Speed	50% control to 0.5 dB of final value		-	-	1	μs

Notes: 1. Device Linearity will begin to degrade below 1 Mhz
2. See Max input rating in Table 3 & Figures on Pages 2 to 4 for data across frequency.
3. Note Absolute Maximum in Table 3.

©2003-2008 Peregrine Semiconductor Corp. All rights reserved.

Typical Performance Data @ 25°C, V_{DD} = 3.0 V

Figure 3. Insertion Loss

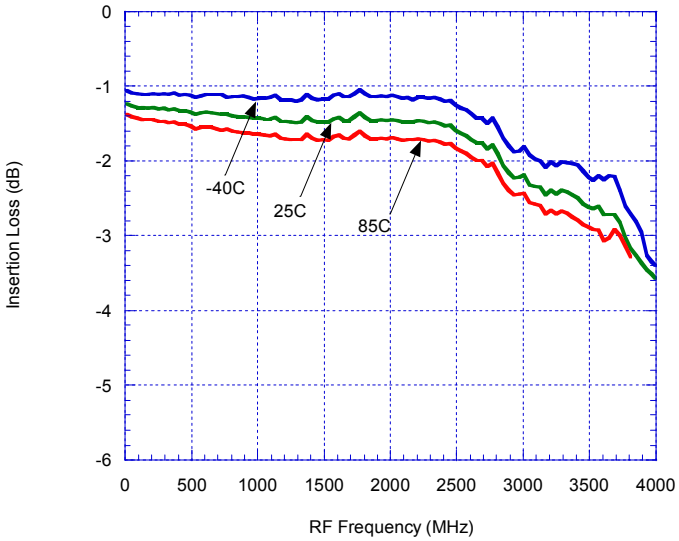

Figure 4. Attenuation at Major steps

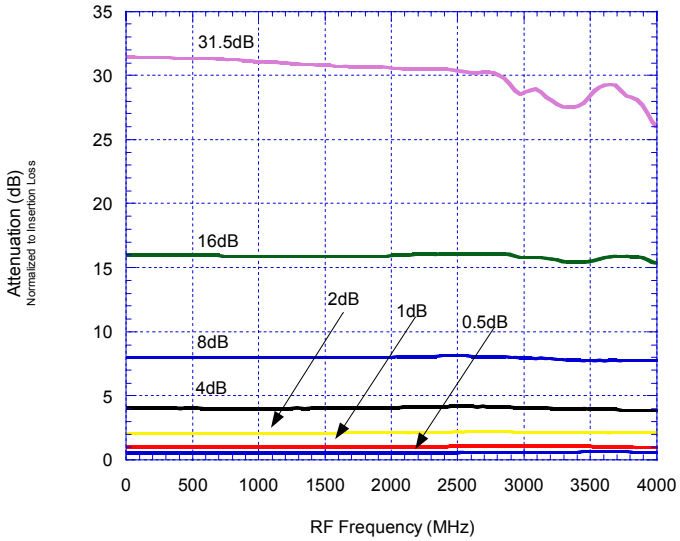

Figure 5. Input Return Loss at Major Attenuation Steps

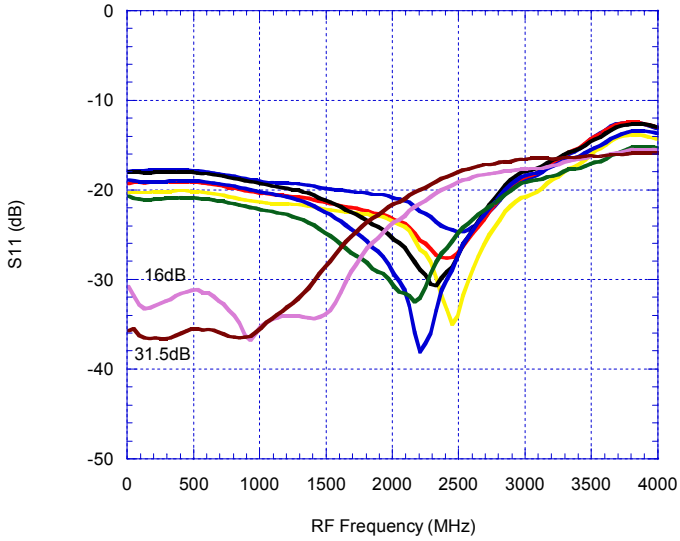

Figure 6. Output Return Loss at Major Attenuation Steps

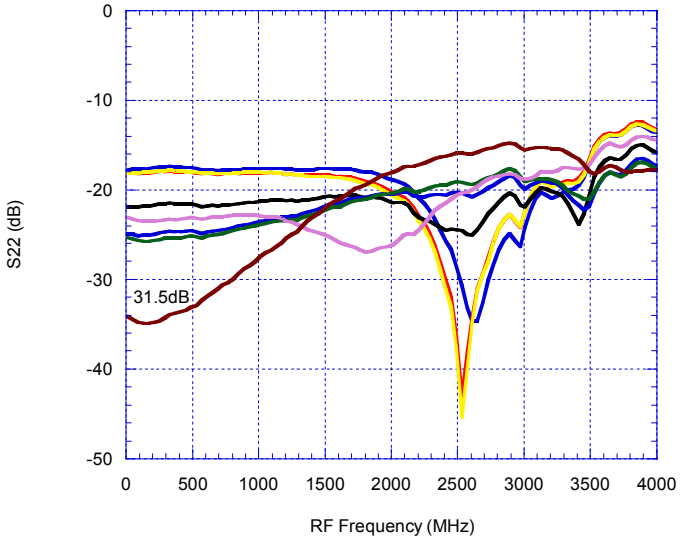

©2003-2008 Peregrine Semiconductor Corp. All rights reserved.

Typical Performance Data @ 25°C, V_{DD} = 3.0 V

Figure 7. Attenuation Error Vs. Frequency

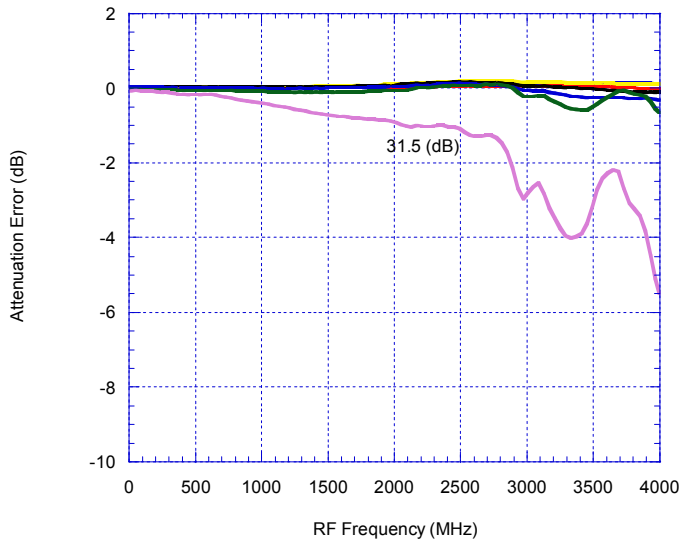

Figure 8. Attenuation Error Vs. Attenuation Setting

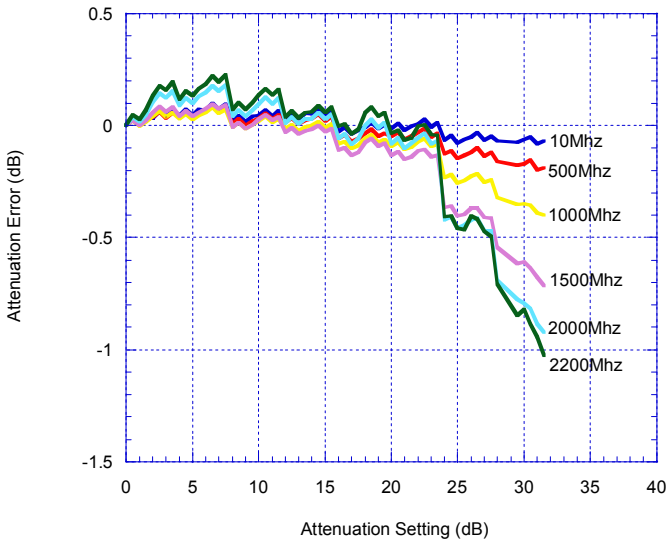

Figure 9. Attenuation Error Vs. Attenuation Setting

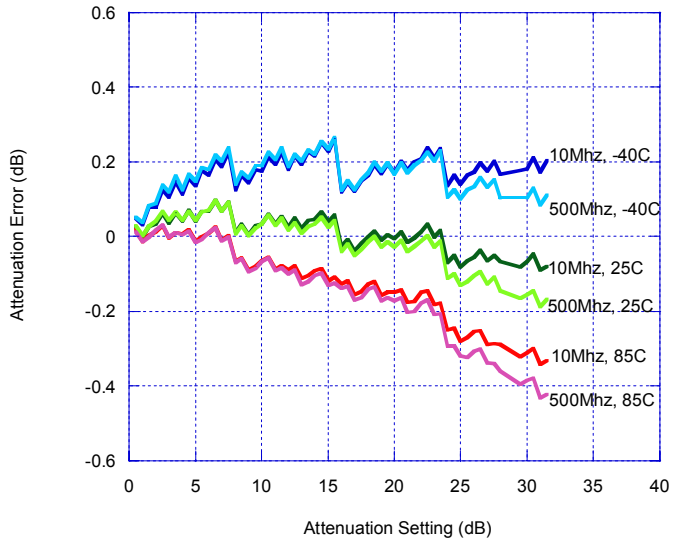

Figure 10. Attenuation Error Vs. Attenuation Setting

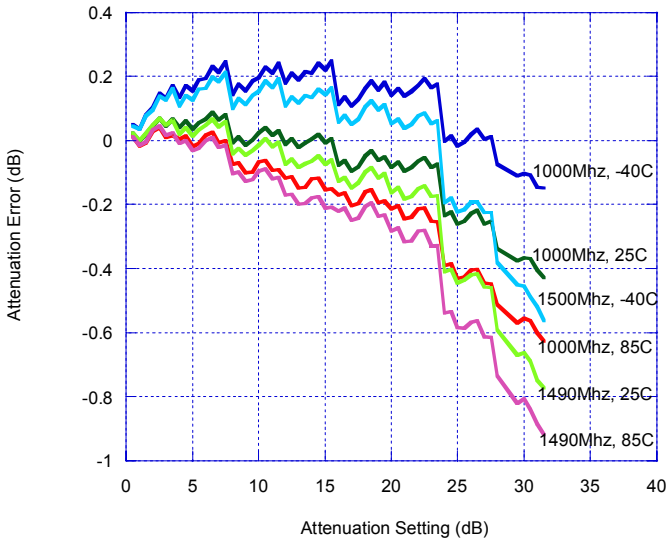

Note: Positive attenuation error indicates higher attenuation than target value

©2003-2008 Peregrine Semiconductor Corp. All rights reserved.

Typical Performance Data @ 25°C, V_{DD} = 3.0 V

Figure 11. Attenuation Error Vs. Frequency

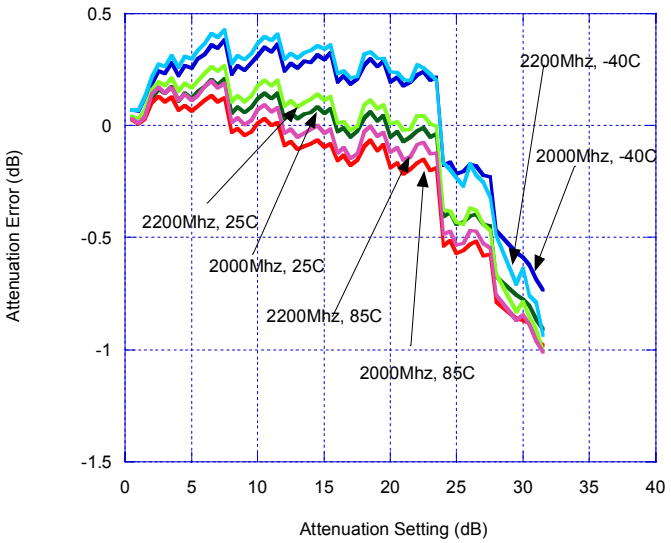

Figure 12. Input IP3 Vs. Frequency

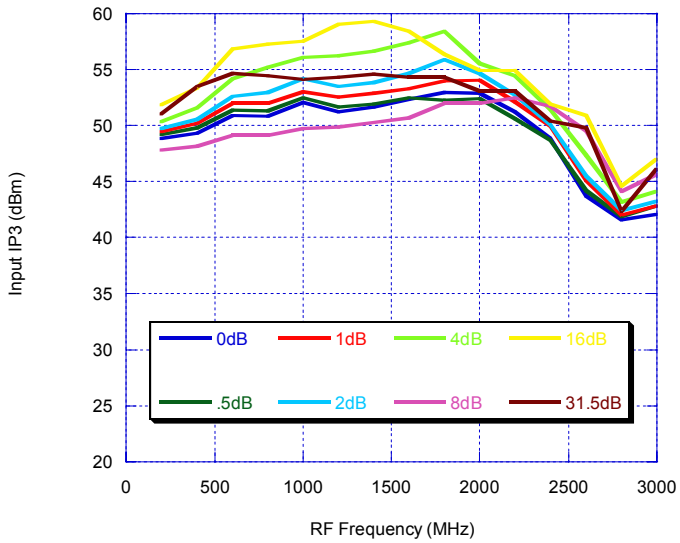

Figure 13. Input 1 dB Compression

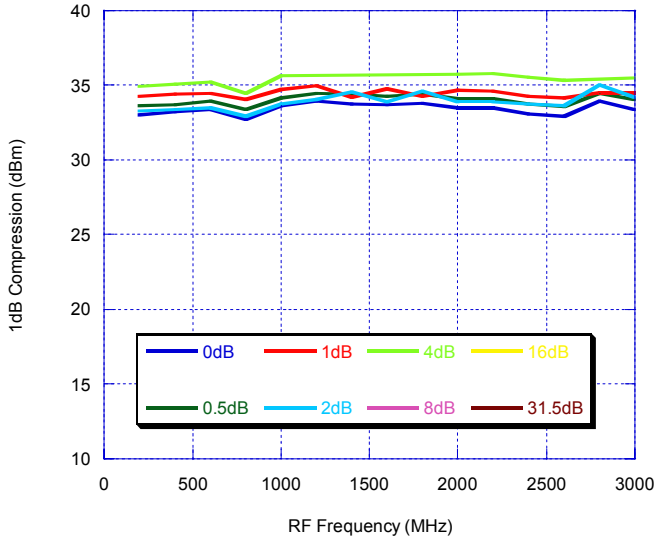

Note: Positive attenuation error indicates higher attenuation than target value

©2003-2008 Peregrine Semiconductor Corp. All rights reserved.

Figure 14. Pin Configuration (Top View)

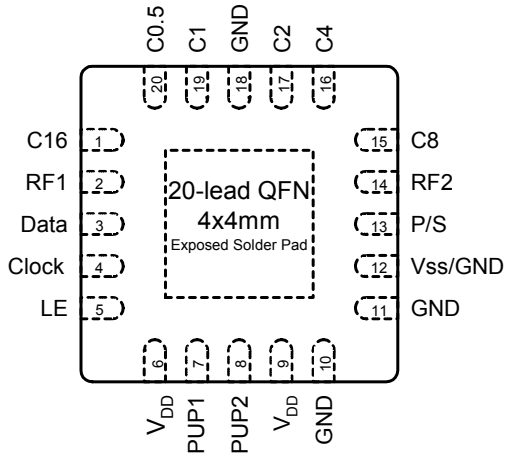

Table 2. Pin Descriptions

Pin No.	Pin Name	Description
1	C16	Attenuation control bit, 16dB (Note 4).
2	RF1	RF port (Note 1).
3	Data	Serial interface data input (Note 4).
4	Clock	Serial interface clock input.
5	LE	Latch Enable input (Note 2).
6	V_{DD}	Power supply pin.
7	PUP1	Power-up selection bit, MSB.
8	PUP2	Power-up selection bit, LSB.
9	V_{DD}	Power supply pin.
10	GND	Ground connection.
11	GND	Ground connection.
12	V_{SS}/GND	Negative supply voltage or GND connection(Note 3)
13	P/S	Parallel/Serial mode select.
14	RF2	RF port (Note 1).
15	C8	Attenuation control bit, 8 dB.
16	C4	Attenuation control bit, 4 dB.
17	C2	Attenuation control bit, 2 dB.
18	GND	Ground connection.
19	C1	Attenuation control bit, 1 dB.
20	C0.5	Attenuation control bit, 0.5 dB.
Paddle	GND	Ground for proper operation

Note 1: Both RF ports must be held at 0 V_{DC} or DC blocked with an external series capacitor.
2: Latch Enable (LE) has an internal 100 kΩresistor to $V_{DD.}$
3: Connect pin 12 to GND to enable internal negative voltage generator. Connect pin 12 to V_{SS} (-VDD) to bypass and disable internal negative voltage generator.
4. Place a 10 kΩresistor in series, as close to pin as possible to avoid frequency resonance.

Table 3. Absolute Maximum Ratings

Symbol	Parameter/Conditions	Min	Max	Units
V_{DD}	Power supply voltage	-0.3	4.0	V
V_I	Voltage on any DC input	-0.3	V_{DD}+ 0.3	V
T_{ST}	Storage temperature range	-65	150	°C
P_{IN}	Input power (50Ω)		+30	dBm
V_{ESD}	ESD voltage (Human Body Model)		500	V

Exceeding absolute maximum ratings may cause permanent damage. Operation should be restricted to the limits in the Operating Ranges table. Operation between operating range maximum and absolute maximum for extended periods may reduce reliability.

Table 4. Operating Ranges

Parameter	Min	Typ	Max	Units
V_{DD} Power Supply Voltage	2.7	3.0	3.3	V
I_{DD} Power Supply Current			100	µA
Digital Input High	0.7xV_{DD}			V
Digital Input Low			0.3xV_{DD}	V
Digital Input Leakage			1	µA
Input Power			+24	dBm
Temperature range	-40		85	°C

Exposed Solder Pad Connection

The exposed solder pad on the bottom of the package must be grounded for proper device operation.

Electrostatic Discharge (ESD) Precautions

When handling this UltraCMOS™ device, observe the same precautions that you would use with other ESD-sensitive devices. Although this device contains circuitry to protect it from damage due to ESD, precautions should be taken to avoid exceeding the rate specified in Table 3.

Latch-Up Avoidance

Unlike conventional CMOS devices, UltraCMOS™ devices are immune to latch-up.

Switching Frequency

The PE4302 has a maximum 25 kHz switching rate.

Resistor on Pin 1 & 3

A 10 kΩ resistor on the inputs to Pin 1 & 3 (see Figure 16) will eliminate package resonance between the RF input pin and the two digital inputs. Specified attenuation error versus frequency performance is dependent upon this condition.

©2003-2008 Peregrine Semiconductor Corp. All rights reserved.

Programming Options

Parallel/Serial Selection
Either a parallel or serial interface can be used to control the PE4302. The P/S bit provides this selection, with P/S=LOW selecting the parallel interface and P/S=HIGH selecting the serial interface.

Parallel Mode Interface
The parallel interface consists of five CMOS-compatible control lines that select the desired attenuation state, as shown in Table 5.

The parallel interface timing requirements are defined by Figure 18 (Parallel Interface Timing Diagram), Table 9 (Parallel Interface AC Characteristics), and switching speed (Table 1).

For *latched* parallel programming the Latch Enable (LE) should be held LOW while changing attenuation state control values, then pulse LE HIGH to LOW (per Figure 18) to latch new attenuation state into device.

For *direct* parallel programming, the Latch Enable (LE) line should be pulled HIGH. Changing attenuation state control values will change device state to new attenuation. Direct Mode is ideal for manual control of the device (using hardwire, switches, or jumpers).

Table 5. Truth Table

P/S	C16	C8	C4	C2	C1	C0.5	Attenuation State
0	0	0	0	0	0	0	Reference Loss
0	0	0	0	0	0	1	0.5 dB
0	0	0	0	0	1	0	1 dB
0	0	0	0	1	0	0	2 dB
0	0	0	1	0	0	0	4 dB
0	0	1	0	0	0	0	8 dB
0	1	0	0	0	0	0	16 dB
0	1	1	1	1	1	1	31.5 dB

Note: Not all 64 possible combinations of C0.5-C16 are shown in table

Serial Interface

The serial interface is a 6-bit serial-in, parallel-out shift register buffered by a transparent latch. It is controlled by three CMOS-compatible signals: Data, Clock, and Latch Enable (LE). The Data and Clock inputs allow data to be serially entered into the shift register, a process that is independent of the state of the LE input.

The LE input controls the latch. When LE is HIGH, the latch is transparent and the contents of the serial shift register control the attenuator. When LE is brought LOW, data in the shift register is latched.

The shift register should be loaded while LE is held LOW to prevent the attenuator value from changing as data is entered. The LE input should then be toggled HIGH and brought LOW again, latching the new data. The timing for this operation is defined by Figure 17 (Serial Interface Timing Diagram) and Table 8 (Serial Interface AC Characteristics).

Power-up Control Settings
The PE4302 always assumes a specifiable attenuation setting on power-up. This feature exists for both the Serial and Parallel modes of operation, and allows a known attenuation state to be established before an initial serial or parallel control word is provided.

When the attenuator powers up in Serial mode (P/S=1), the six control bits are set to whatever data is present on the six parallel data inputs (C0.5 to C16). This allows any one of the 64 attenuation settings to be specified as the power-up state.

When the attenuator powers up in Parallel mode (P/S=0) with LE=0, the control bits are automatically set to one of four possible values. These four values are selected by the two power-up control bits, PUP1 and PUP2, as shown in Table 6 (Power-Up Truth Table, Parallel Mode).

Table 6. Parallel PUP Truth Table

P/S	LE	PUP2	PUP1	Attenuation State
0	0	0	0	Reference Loss
0	0	1	0	8 dB
0	0	0	1	16 dB
0	0	1	1	31 dB
0	1	X	X	Defined by **C0.5-C16**

Note: Power up with LE=1 provides normal parallel operation with C0.5-C16, and PUP1 and PUP2 are not active.

©2003-2008 Peregrine Semiconductor Corp. All rights reserved.

Evaluation Kit

The Digital Attenuator Evaluation Kit board was designed to ease customer evaluation of the PE4302 Digital Step Attenuator.

J9 is used in conjunction with the supplied DC cable to supply VDD, GND, and –VDD. If use of the internal negative voltage generator is desired, then connect –VDD (Black banana plug) to ground. If an external –VDD is desired, then apply -3V.

J1 should be connected to the parallel port of a PC with the supplied ribbon cable. The evaluation software is written to operate the DSA in serial mode, so Switch 7 (P/S) on the DIP switch SW1 should be ON with all other switches off. Using the software, enable or disable each attenuation setting to the desired combined attenuation. The software automatically programs the DSA each time an attenuation state is enabled or disabled.

To evaluate the Power Up options, first disconnect the parallel ribbon cable from the evaluation board. The parallel cable must be removed to prevent the PC parallel port from biasing the control pins.

During power up with P/S=1 high and LE=0 or P/S=0 low and LE=1, the default power-up signal attenuation is set to the value present on the six control bits on the six parallel data inputs (C0.5 to C16). This allows any one of the 64 attenuation settings to be specified as the power-up state.

During power up with P/S=0 high and LE=0, the control bits are automatically set to one of four possible values presented through the PUP interface. These four values are selected by the two power-up control bits, PUP1 and PUP2, as shown in the Table 6.

Resistor on Pin 1 & 3

A 10 kΩ resistor on the inputs to Pin 1 & 3 (Figure 16) will eliminate package resonance between the RF input pin and the two digital inputs. Specified attenuation error versus frequency performance is dependent upon this condition.

Figure 15. Evaluation Board Layout

Peregrine Specification 101/0112

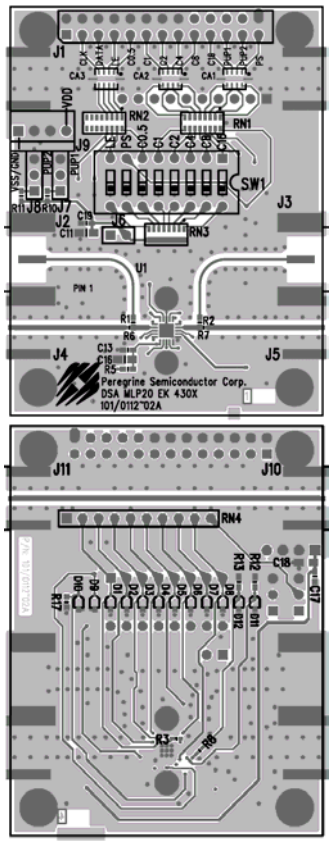

Figure 16. Evaluation Board Schematic

Peregrine Specification 102/0144

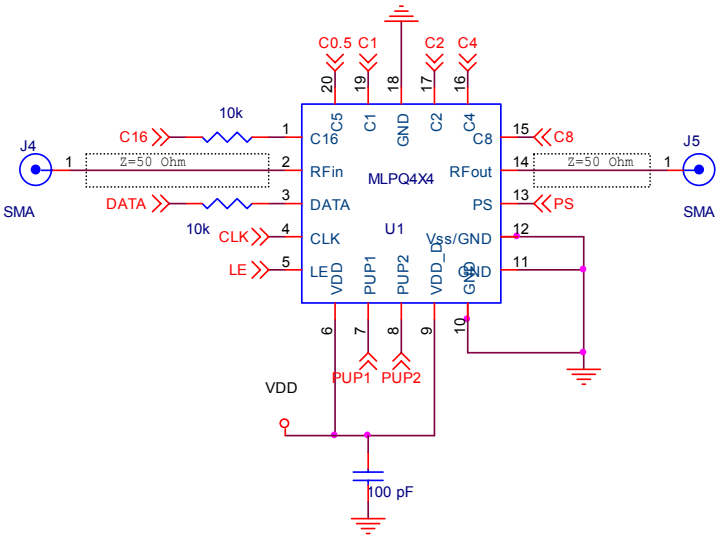

Note: Resistors on pins 1 and 3 are required to avoid package resonance and meet error specifications over frequency.

©2003-2008 Peregrine Semiconductor Corp. All rights reserved.

Figure 17. Serial Interface Timing Diagram

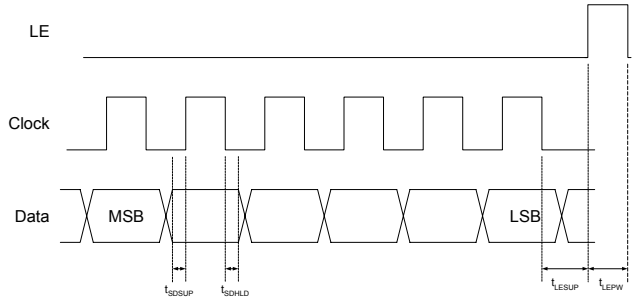

Table 7. 6-Bit Attenuator Serial Programming Register Map

B5	B4	B3	B2	B1	B0
C16	C8	C4	C2	C1	C0.5

↑ MSB (first in) ↑ LSB (last in)

Figure 18. Parallel Interface Timing Diagram

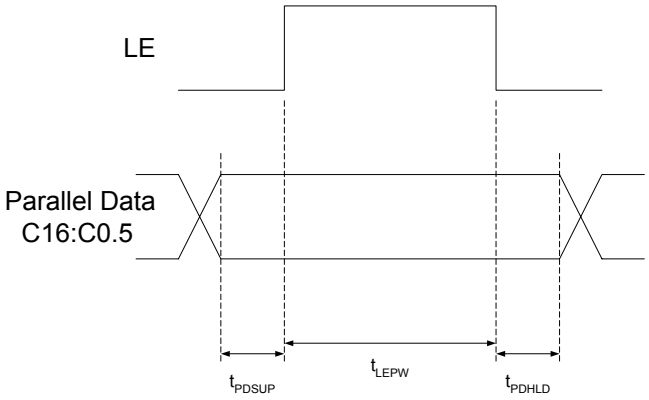

Table 8. Serial Interface AC Characteristics

V_{DD} = 3.0 V, -40° C < T_A < 85° C, unless otherwise specified

Symbol	Parameter	Min	Max	Unit
f_{Clk}	Serial data clock frequency (Note 1)		10	MHz
t_{ClkH}	Serial clock HIGH time	30		ns
t_{ClkL}	Serial clock LOW time	30		ns
t_{LESUP}	LE set-up time after last clock falling edge	10		ns
t_{LEPW}	LE minimum pulse width	30		ns
t_{SDSUP}	Serial data set-up time before clock rising edge	10		ns
t_{SDHLD}	Serial data hold time after clock falling edge	10		ns

Note: f_{Clk} is verified during the functional pattern test. Serial programming sections of the functional pattern are clocked at 10 MHz to verify fclk specification.

Table 9. Parallel Interface AC Characteristics

V_{DD} = 3.0 V, -40° C < T_A < 85° C, unless otherwise specified

Symbol	Parameter	Min	Max	Unit
t_{LEPW}	LE minimum pulse width	10		ns
t_{PDSUP}	Data set-up time before rising edge of LE	10		ns
t_{PDHLD}	Data hold time after falling edge of LE	10		ns

©2003-2008 Peregrine Semiconductor Corp. All rights reserved.

Figure 19. Package Drawing

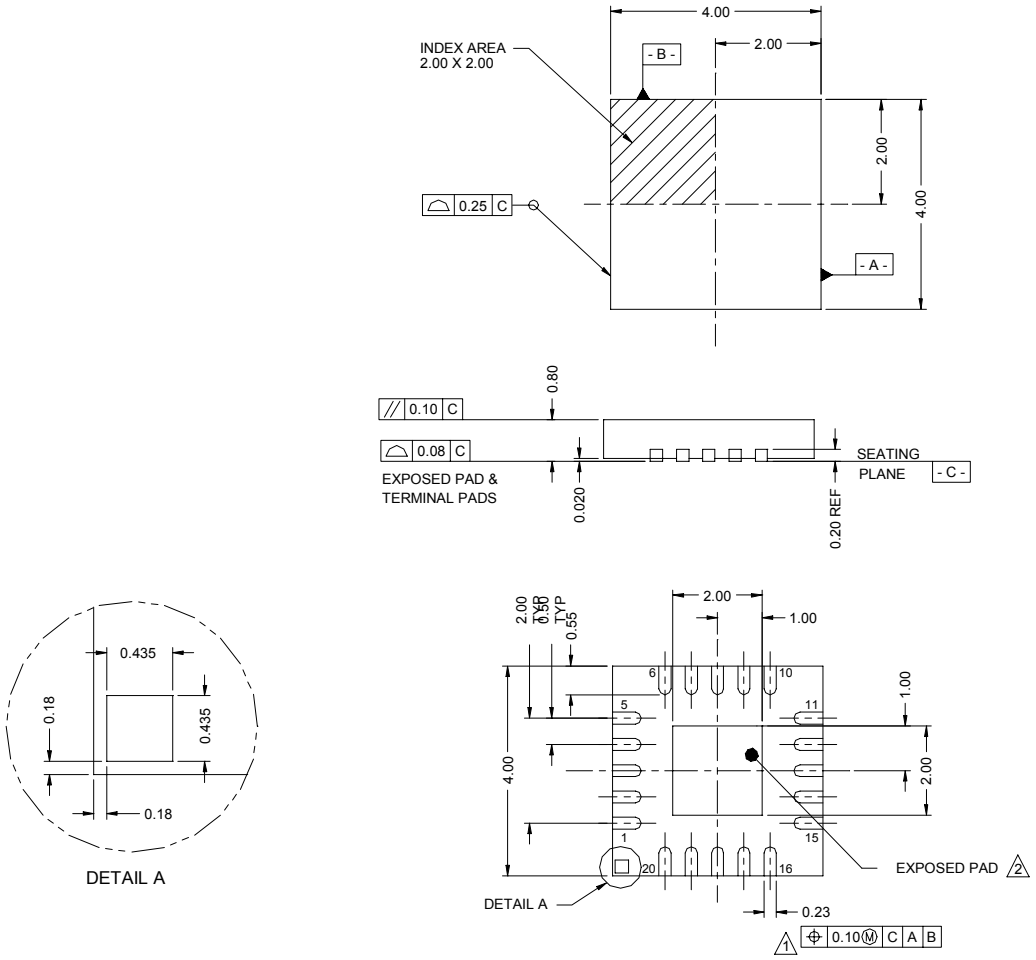

1. Dimension applies to metallized terminal and is measured between 0.25 and 0.30 from terminal tip.
2. Coplanarity applies to the exposed heat sink slug as well as the terminals.
3. Dimensions are in millimeters.

©2003-2008 Peregrine Semiconductor Corp. All rights reserved.

Figure 20. Marking Specifications

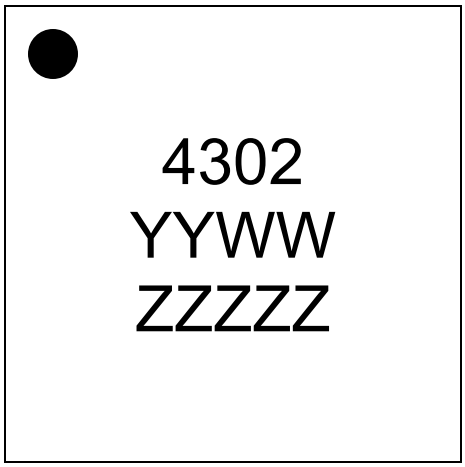

YYWW = Date Code
ZZZZZ = Last five digits of PSC Lot Number

Figure 21. Tape and Reel Drawing

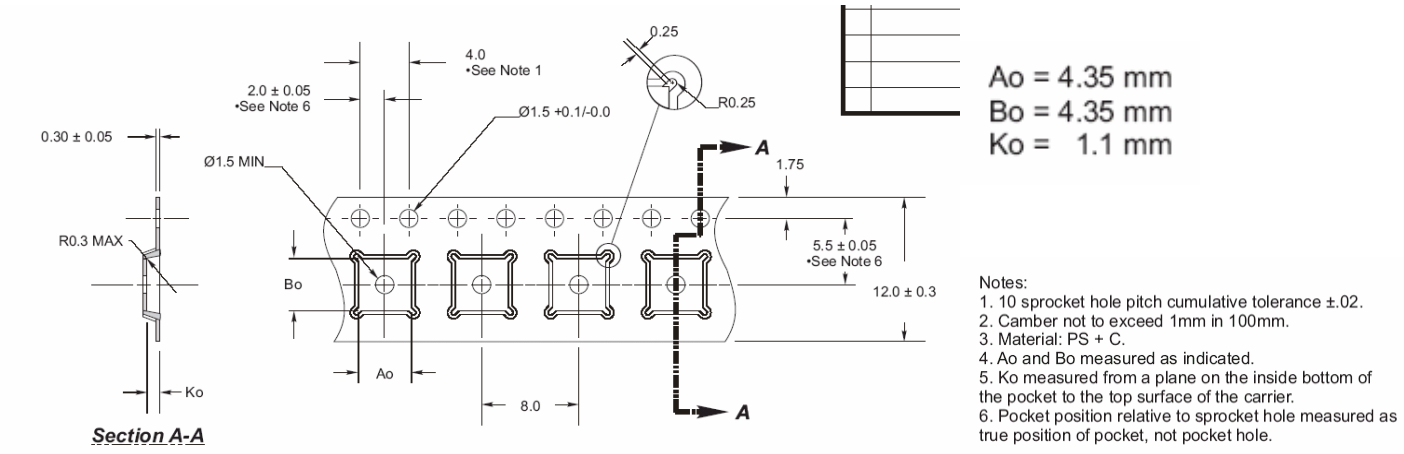

Table 10. Ordering Information

Order Code	Part Marking	Description	Package	Shipping Method
4302-00	PE4302-EK	PE4302-20MLP 4x4mm-EK	Evaluation Kit	1 / Box
4302-51	4302	PE4302G-20MLP 4x4mm-75A	Green 20-lead 4x4mm QFN	75 units / Tube
4302-52	4302	PE4302G-20MLP 4x4mm-3000C	Green 20-lead 4x4mm QFN	3000 units / T&R

©2003-2008 Peregrine Semiconductor Corp. All rights reserved.

Sales Offices

The Americas

Peregrine Semiconductor Corporation
9380 Carroll Park Drive
San Diego, CA 92121
Tel: 858-731-9400
Fax: 858-731-9499

Europe

Peregrine Semiconductor Europe
Bâtiment Maine
13-15 rue des Quatre Vents
F-92380 Garches, France
Tel: +33-1-4741-9173
Fax : +33-1-4741-9173

Space and Defense Products

Americas:

Tel: 858-731-9453

Europe, Asia Pacific:

180 Rue Jean de Guiramand
13852 Aix-En-Provence Cedex 3, France
Tel: +33-4-4239-3361
Fax: +33-4-4239-7227

Peregrine Semiconductor, Asia Pacific (APAC)
Shanghai, 200040, P.R. China
Tel: +86-21-5836-8276
Fax: +86-21-5836-7652

Peregrine Semiconductor, Korea
#B-2607, Kolon Tripolis, 210
Geumgok-dong, Bundang-gu, Seongnam-si
Gyeonggi-do, 463-943 South Korea
Tel: +82-31-728-3939
Fax: +82-31-728-3940

Peregrine Semiconductor K.K., Japan
Teikoku Hotel Tower 10B-6
1-1-1 Uchisaiwai-cho, Chiyoda-ku
Tokyo 100-0011 Japan
Tel: +81-3-3502-5211
Fax: +81-3-3502-5213

For a list of representatives in your area, please refer to our Web site at: ***www.psemi.com***

Data Sheet Identification

Advance Information

The product is in a formative or design stage. The data sheet contains design target specifications for product development. Specifications and features may change in any manner without notice.

Preliminary Specification

The data sheet contains preliminary data. Additional data may be added at a later date. Peregrine reserves the right to change specifications at any time without notice in order to supply the best possible product.

Product Specification

The data sheet contains final data. In the event Peregrine decides to change the specifications, Peregrine will notify customers of the intended changes by issuing a DCN (Document Change Notice).

The information in this data sheet is believed to be reliable. However, Peregrine assumes no liability for the use of this information. Use shall be entirely at the user's own risk.

No patent rights or licenses to any circuits described in this data sheet are implied or granted to any third party.

Peregrine's products are not designed or intended for use in devices or systems intended for surgical implant, or in other applications intended to support or sustain life, or in any application in which the failure of the Peregrine product could create a situation in which personal injury or death might occur. Peregrine assumes no liability for damages, including consequential or incidental damages, arising out of the use of its products in such applications.

The Peregrine name, logo, and UTSi are registered trademarks and UltraCMOS, HaRP and MultiSwitch are trademarks of Peregrine Semiconductor Corp.

©2003-2008 Peregrine Semiconductor Corp. All rights reserved.