Peregrine Semiconductor

Product Specification

PE4259

SPDT High Power UltraCMOS™
10 MHz – 3.0 GHz RF Switch

Features

- Single-pin or complementary CMOS logic control inputs
- Low insertion loss: 0.35 dB at 1000 MHz, 0.5 dB at 2000 MHz
- Isolation of 30 dB at 1000 MHz, 20 dB at 2000 MHz
- Typical input 1 dB compression point of +33.5 dBm
- 1.8V minimum power supply voltage
- Ultra-small SC-70 package

Product Description

The PE4259 UltraCMOS™ RF Switch is designed to cover a broad range of applications from 10 MHz through 3000 MHz. This reflective switch integrates on-board CMOS control logic with a low voltage CMOS-compatible control interface, and can be controlled using either single-pin or complementary control inputs. Using a nominal +3-volt power supply voltage, a typical input 1 dB compression point of +33.5 dBm can be achieved.

The PE4259 SPDT High Power RF Switch is manufactured on Peregrine's UltraCMOS™ process, a patented variation of silicon-on-insulator (SOI) technology on a sapphire substrate, offering the performance of GaAs with the economy and integration of conventional CMOS.

Figure 1. Functional Diagram

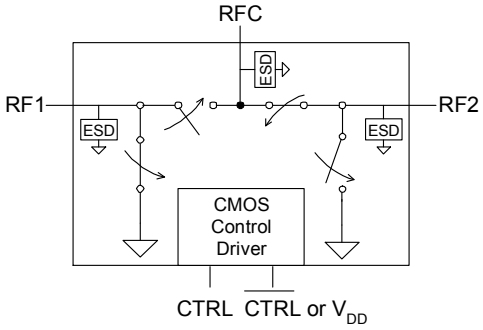

Figure 2. Package Type SC-70

6-lead SC-70

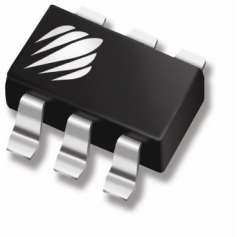

Table 1. Electrical Specifications @ +25 °C, V_{DD} = 3 V (Z_S = Z_L = 50 Ω)

Parameter	Conditions	Minimum	Typical	Maximum	Units
Operation Frequency[1]		10 MHz		3000	MHz
Insertion Loss[3]	1000 MHz 2000 MHz		0.35 0.50	0.45 0.60	dB dB
Isolation	1000 MHz 2000 MHz	29 19	30 20		dB dB
Return Loss[3]	1000 MHz 2000 MHz	21 24	22 27		dB dB
'ON' Switching Time	50% CTRL to 0.1 dB of final value, 1 GHz		1.50		us
'OFF' Switching Time	50% CTRL to 25 dB isolation, 1 GHz		1.50		us
Video Feedthrough[2]			15		mV_{pp}
Input 1 dB Compression	1000 MHz @ 2.3 - 3.3 V 1000 MHz @ 1.8 - 2.3 V 2500 MHz @ 2.3 - 3.3 V 2500 MHz @ 1.8 - 2.3 V	31.5 29.5 28.5 28	33.5 30.5 30.5 29		dBm
Input IP3	1000 MHz, 20dBm input power		55		dBm

Notes: 1. Device linearity will begin to degrade below 10 MHz.

2. The DC transient at the output of any port of the switch when the control voltage is switched from Low to High or High to Low in a 50 Ω test set-up, measured with 1ns risetime pulses and 500 MHz bandwidth.

3. A tuning capacitor must be added to the application board to optimize the insertion loss and return loss performance. See Figure 6 for details.

©2010 Peregrine Semiconductor Corp. All rights reserved.

Figure 3. Pin Configuration (Top View)

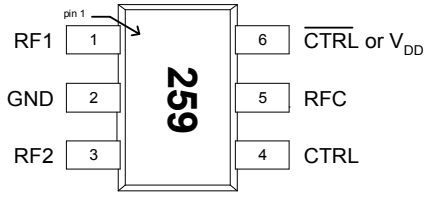

Table 2. Pin Descriptions

Pin No.	Pin Name	Description
1	RF1[4]	RF Port1
2	GND	Ground connection. Traces should be physically short and connected to ground plane for best performance.
3	RF2[4]	RF Port2
4	CTRL	Switch control input, CMOS logic level.
5	RFC[4]	RF Common
6	$\overline{\text{CTRL}}$ or V_{DD}	This pin supports two interface options: *Single-pin control mode*. A nominal 3-volt supply connection is required. *Complementary-pin control mode*. A complementary CMOS control signal to CTRL is supplied to this pin. By-passing on this pin is not required in this mode.

Note: 4. All RF pins must be DC blocked with an external series capacitor or held at 0 V_{DC}.

Table 3. Operating Ranges

Parameter	Min	Typ	Max	Units
V_{DD} Power Supply Voltage	1.8	3.0	3.3	V
I_{DD} Power Supply Current (V_{DD} = 3V, V_{CNTL} = 3V)		9	20	µA
Control Voltage High	0.7x V_{DD}			V
Control Voltage Low			0.3x V_{DD}	V

Moisture Sensitivity Level

The Moisture Sensitivity Level rating for the PE4259 in the SC70 package is MSL1.

Switching Frequency

The PE4259 has a maximum 25 kHz switching rate.

Table 4. Absolute Maximum Ratings

Symbol	Parameter/Conditions	Min	Max	Units
V_{DD}	Power supply voltage	-0.3	4.0	V
V_I	Voltage on any DC input	-0.3	V_{DD}+ 0.3	V
T_{ST}	Storage temperature range	-65	150	°C
T_{OP}	Operating temperature range	-40	85	°C
P_{IN}	Input power (50Ω)		+34[5]	dBm
V_{ESD}	ESD Voltage (HBM, ML_STD 883 Method 3015.7)		2000	V
	ESD Voltage (MM, JEDEC, JESD22-A114-B)		100	V

Notes: 5. To maintain optimum device performance, do not exceed Max P_{IN} at desired operating frequency (see Figure 4).

Exceeding absolute maximum ratings may cause permanent damage. Operation should be restricted to the limits in the Operating Ranges table. Operation between operating range maximum and absolute maximum for extended periods may reduce reliability.

Figure 4. Maximum Input Power

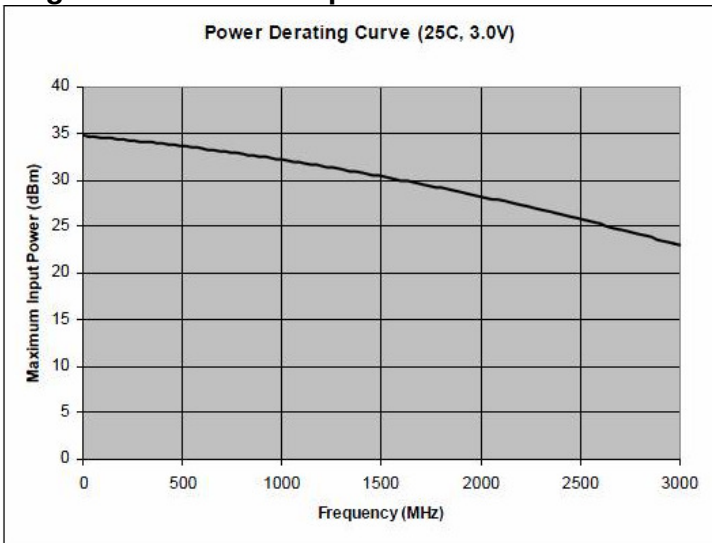

Latch-Up Avoidance

Unlike conventional CMOS devices, UltraCMOS™ devices are immune to latch-up.

Electrostatic Discharge (ESD) Precautions

When handling this UltraCMOS™ device, observe the same precautions that you would use with other ESD-sensitive devices. Although this device contains circuitry to protect it from damage due to ESD, precautions should be taken to avoid exceeding the specified rating.

©2010 Peregrine Semiconductor Corp. All rights reserved.

Table 5. Single-pin Control Logic Truth Table

Control Voltages	Signal Path
Pin 6 (V_{DD}) = V_{DD} Pin 4 (CTRL) = High	RFC to RF1
Pin 6 (V_{DD}) = V_{DD} Pin 4 (CTRL) = Low	RFC to RF2

Table 6. Complementary-pin Control Logic Truth Table

Control Voltages	Signal Path
Pin 6 ($\overline{CTRL}$ or V_{DD}) = Low Pin 4 (CTRL) = High	RFC to RF1
Pin 6 ($\overline{CTRL}$ or V_{DD}) = High Pin 4 (CTRL) = Low	RFC to RF2

Control Logic Input

The PE4259 is a versatile RF CMOS switch that supports two operating control modes; single-pin control mode and complementary-pin control mode.

Single-pin control mode enables the switch to operate with a single control pin (pin 4) supporting a +3-volt CMOS logic input, and requires a dedicated +3-volt power supply connection on pin 6 (V_{DD}). This mode of operation reduces the number of control lines required and simplifies the switch control interface typically derived from a CMOS µProcessor I/O port.

Complementary-pin control mode allows the switch to operate using complementary control pins CTRL and $\overline{CTRL}$ (pins 4 & 6), that can be directly driven by +3-volt CMOS logic or a suitable µProcessor I/O port. This enables the PE4259 to be used as a potential alternate source for SPDT RF switch products used in positive control voltage mode and operating within the PE4259 operating limits.

©2010 Peregrine Semiconductor Corp. All rights reserved.

Evaluation Kit

The SPDT switch EK Board was designed to ease customer evaluation of Peregrine's PE4259. The RF common port is connected through a 50 Ω transmission line via the top SMA connector, J1. RF1 and RF2 are connected through 50 Ω transmission lines via SMA connectors J2 and J3, respectively. A through 50 Ω transmission is available via SMA connectors J4 and J5. This transmission line can be used to estimate the loss of the PCB over the environmental conditions being evaluated.

The board is constructed of a two metal layer FR4 material with a total thickness of 0.031". The bottom layer provides ground for the RF transmission lines. The transmission lines were designed using a coplanar waveguide with ground plane model using a trace width of 0.0476", trace gaps of 0.030", dielectric thickness of 0.028", metal thickness of 0.0021" and ε_r of 4.4.

J6 and J7 provide a means for controlling DC and digital inputs to the device. J6-1 is connected to the device V_{DD} or CTRL input. J7-1 is connected to the device CTRL input.

Figure 5. Evaluation Board Layouts

Peregrine Specification 101/0162-02

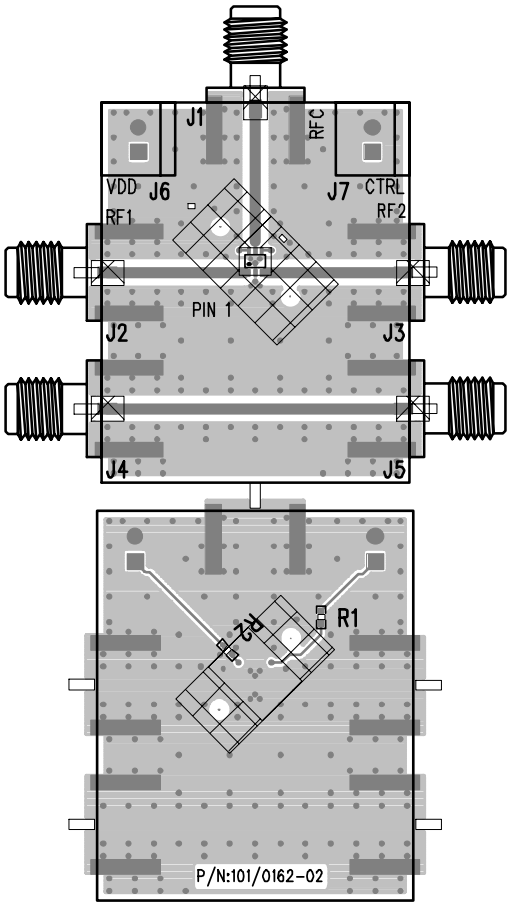

Figure 6. Evaluation Board Schematic

Peregrine Specification 102/0218-02

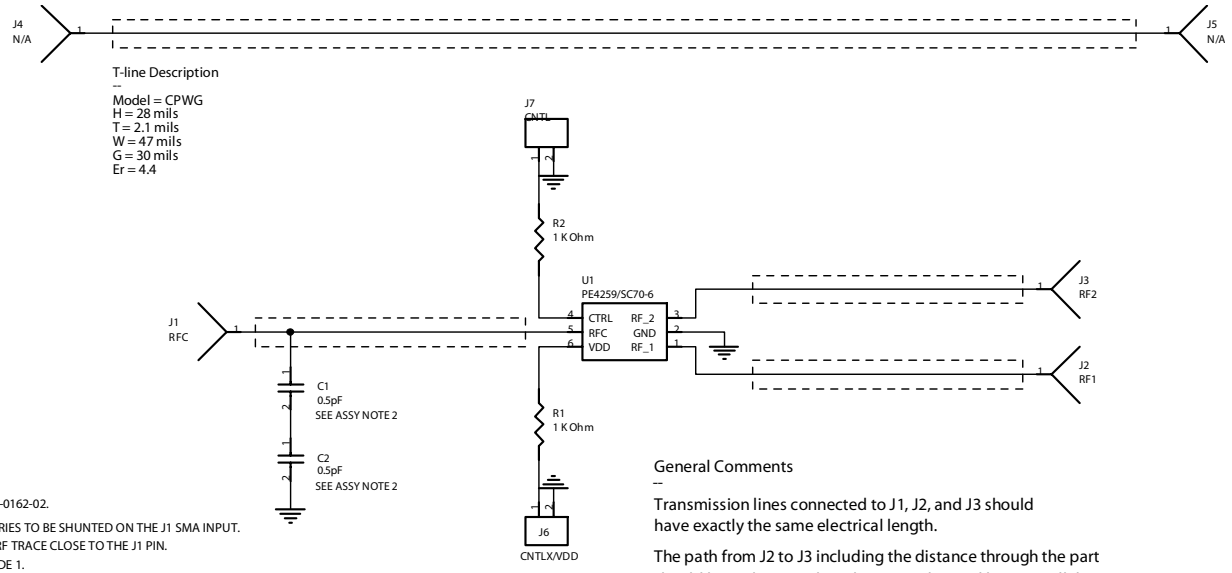

©2010 Peregrine Semiconductor Corp. All rights reserved.

Typical Performance Data @ -40 ℃ to 85 ℃ (Unless Otherwise Noted)

Figure 7. Insertion Loss

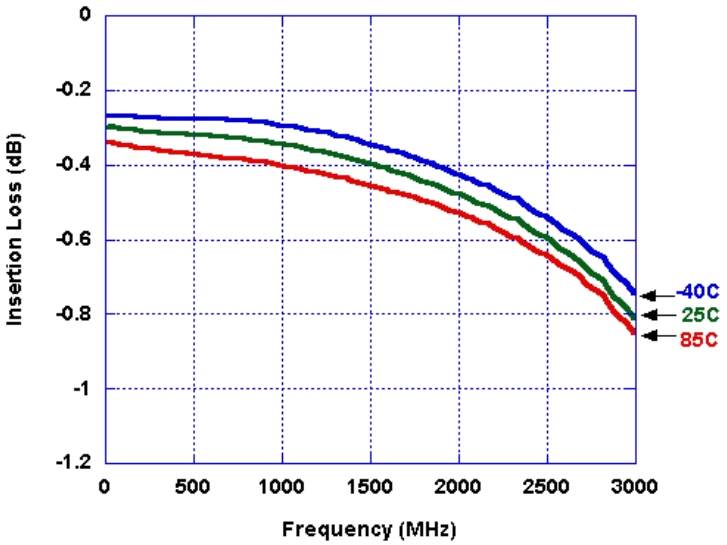

Figure 8. Isolation – Input to Output

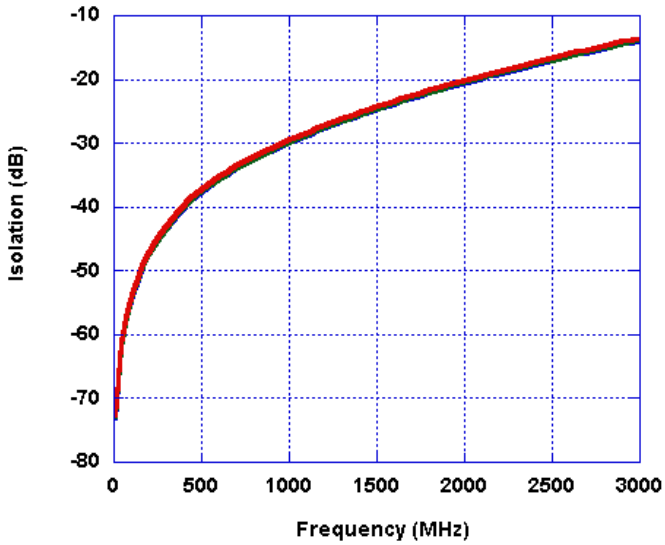

Figure 9. Isolation – Output to Output

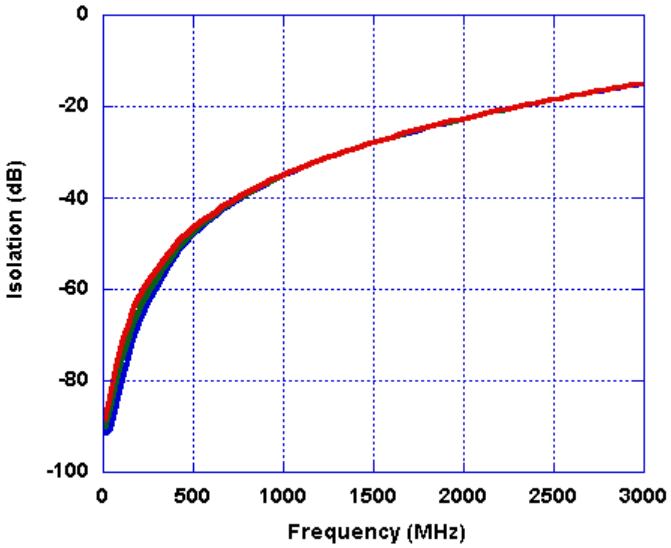

Figure 10. Return Loss (Input)

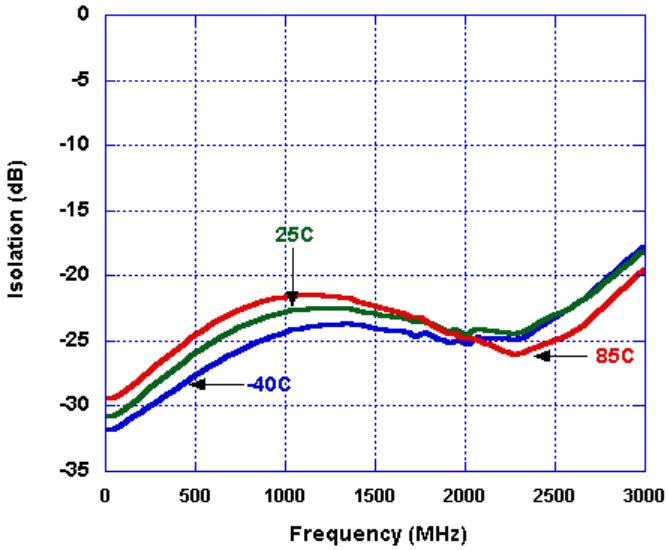

©2010 Peregrine Semiconductor Corp. All rights reserved.

Typical Performance Data @ V_{DD} = 2.3V, T=25°C

Figure 11. Insertion Loss

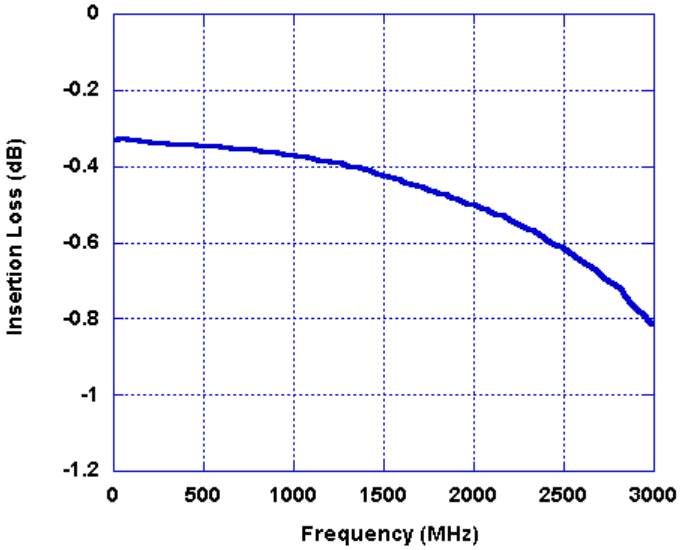

Figure 12. Isolation – Input to Output

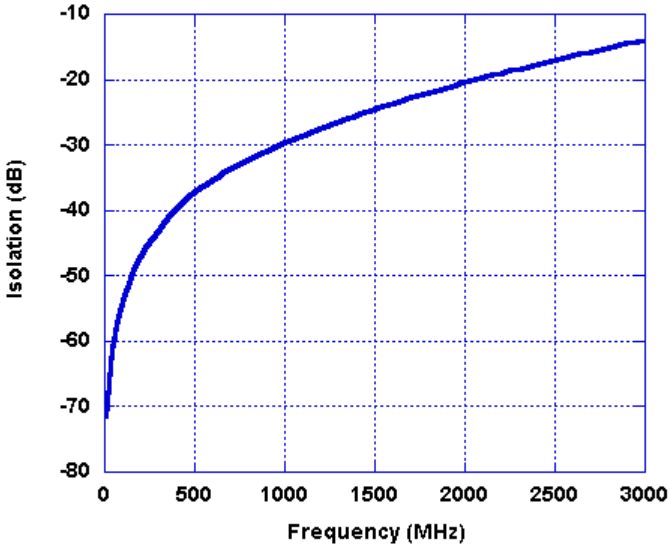

Figure 13. Isolation – Output to Output

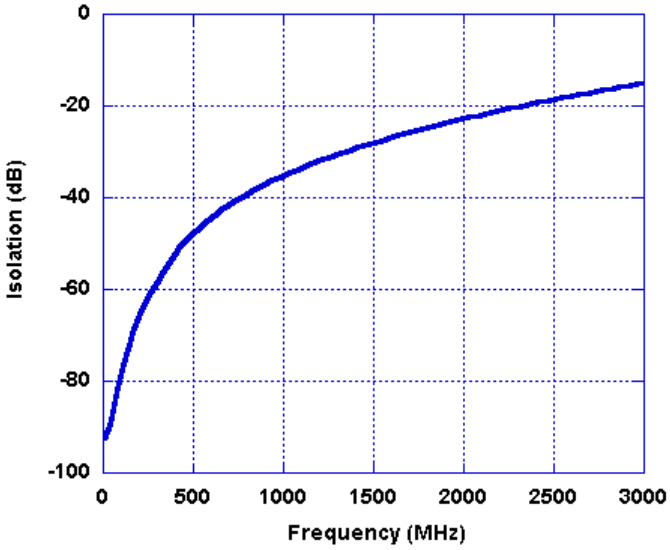

Figure 14. Return Loss (Input & Output)

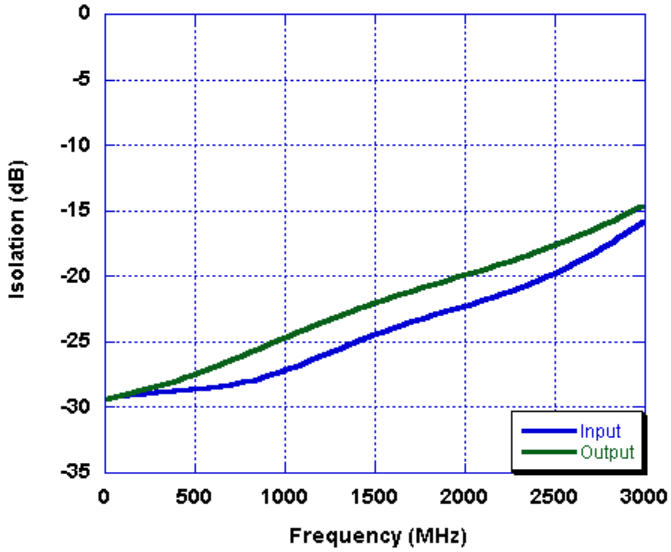

©2010 Peregrine Semiconductor Corp. All rights reserved.

Figure 15. Package Drawing

6-lead SC-70

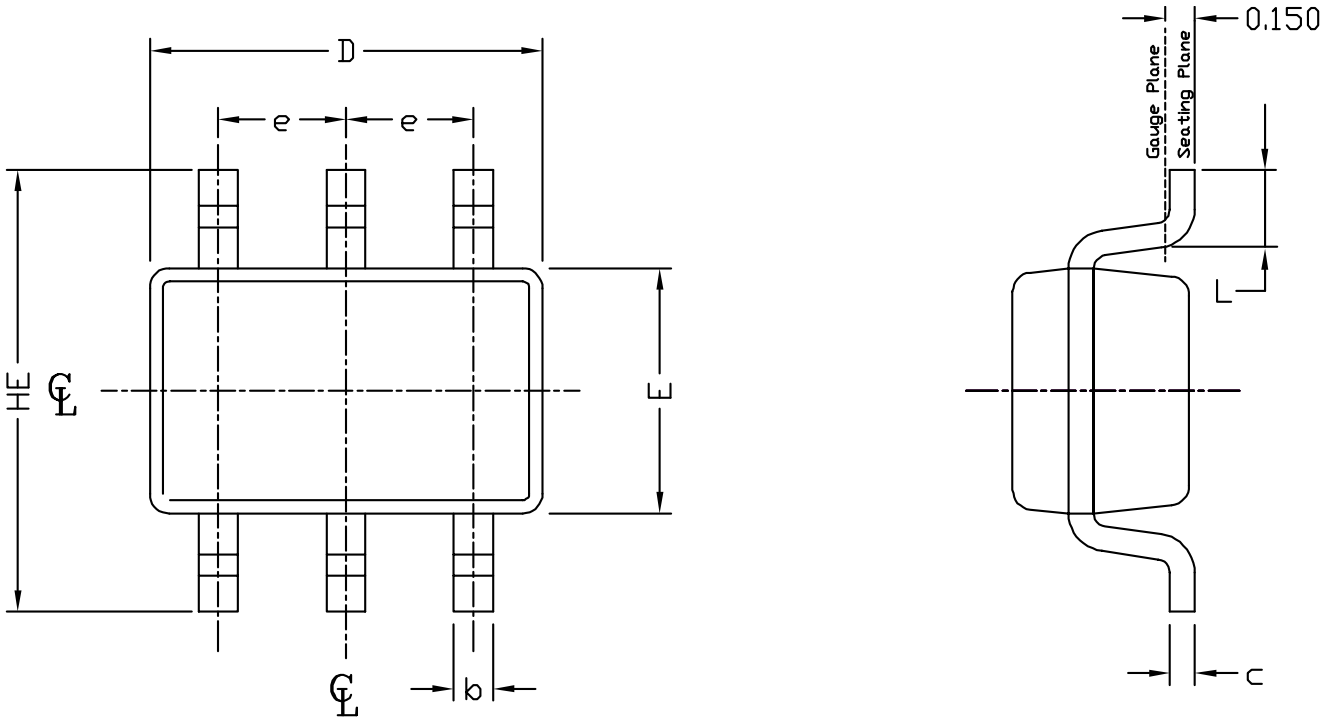

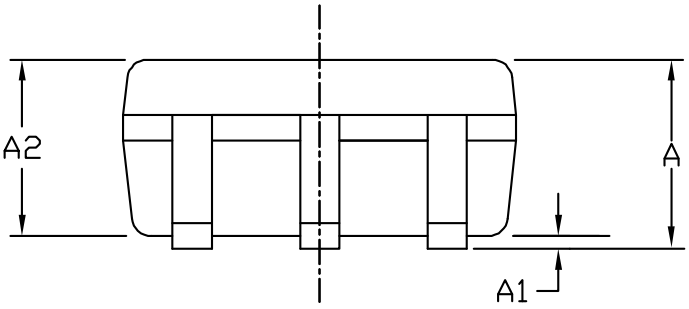

SYMBOL	MIN	MAX
E	1.15	1.35
D	1.85	2.25
HE	2.00	2.30
A	0.80	1.10
A2	0.80	1.00
A1	0.00	0.10
e	0.65 BSC	
b	0.15	0.30
c	0.08	0.25
L	0.21	0.41

NOTE:

1. ALL DIMENSIONS ARE IN MILLIMETERS.
2. DIMENSIONS ARE EXCLUSIVE OF MOLD FLASH & GATE BURR.
3. ALL SPECIFICATIONS COMPLY TO JEDEC SPEC MO-203 ISSUE A.
4. DIE IS FACING UP FOR MOLD AND FACING DOWN FOR TRIM/FORM. ie :REVERSE TRIM/FORM.
5. PACKAGE SURFACE MATTE FINISH VDI 11~13.
6. THE FOOT LENGTH MEASURING BASED ON GAUGE PLANE METHOD.

©2010 Peregrine Semiconductor Corp. All rights reserved.

Figure 16. Tape and Reel Specifications

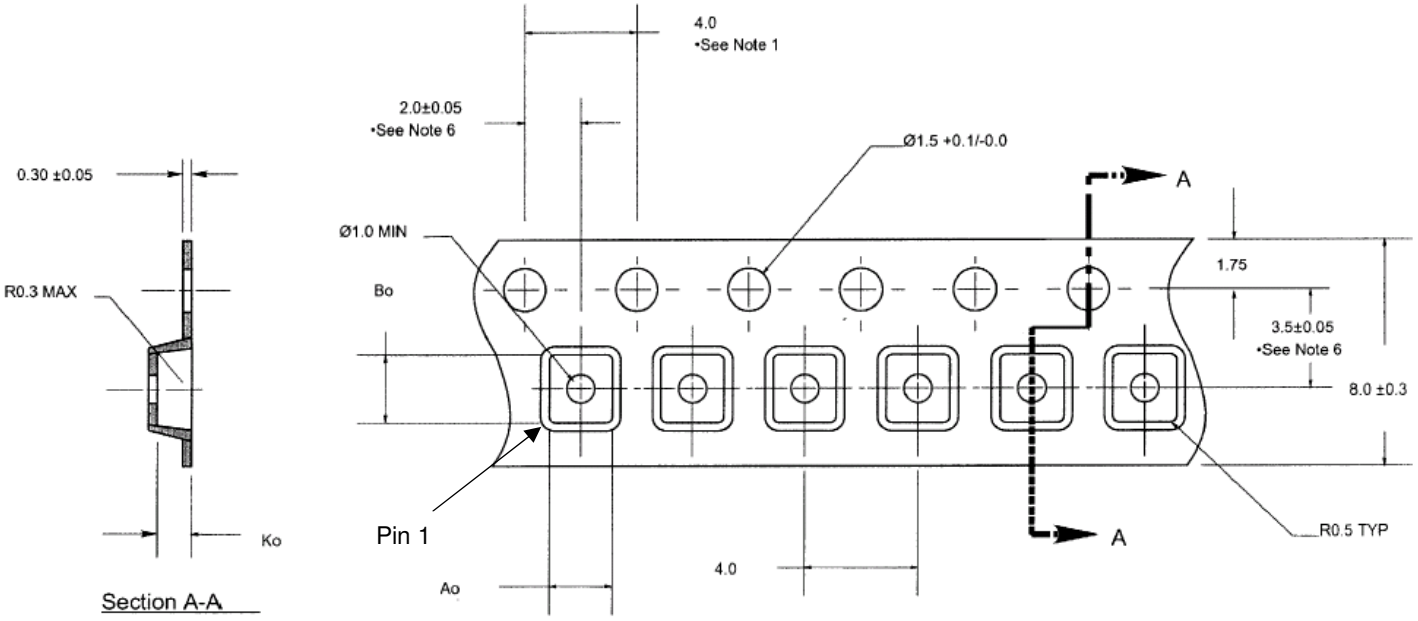

Notes:
1. 10 sprocket hole pitch cumulative tolerance ±.02.
2. Camber not to exceed 1mm in 100mm.
3. Material: Black Conductive Advantek Polystyrene.
4. Ao and Bo measured on a plane 0.3mm above the bottom of the pocket
5. Ko measured from a plane on the inside bottom of the pocket to the top surface of the carrier.
6. Pocket position relative to sprocket hole measured as true position of pocket, not pocket hole.

Ao = 2.25 mm
Bo = 2.4 mm
Ko = 1.2 mm

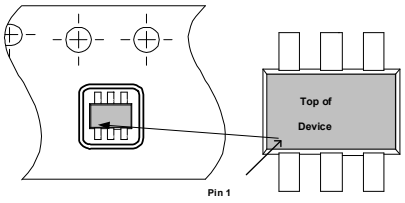

Device Orientation in Tape

Table 7. Ordering Information

Order Code	Part Marking	Description	Package	Shipping Method
4259-00	PE4259-EK	PE4259-06SC70-EK	Evaluation Kit	1 / Box
4259-51 (note 1)	259	PE4259G-06SC70-cut off tape and reel	Green 6-lead SC-70	Cut tape or loose
4259-52 (note 1)	259	PE4259G-06SC70-3000C	Green 6-lead SC-70	3000 units / T&R
4259-62 (note 2)	259	PE4259G-06SC70-cut off tape and reel	Green 6-lead SC-70	Cut tape or loose
4259-63 (note 2)	259	PE4259G-06SC70-3000C	Green 6-lead SC-70	3000 units / T&R

Notes: 1. Unisem assembly house. Please contact factory for assembly house details.
2. Hana assembly house. Please contact factory for assembly house details.

©2010 Peregrine Semiconductor Corp. All rights reserved.

Sales Offices

The Americas

Peregrine Semiconductor Corporation
9380 Carroll Park Drive
San Diego, CA 92121
Tel: 858-731-9400
Fax: 858-731-9499

Europe

Peregrine Semiconductor Europe
Bâtiment Maine
13-15 rue des Quatre Vents
F-92380 Garches, France
Tel: +33-1-4741-9173
Fax : +33-1-4741-9173

High-Reliability and Defense Products

Americas
San Diego, CA, USA
Phone: 858-731-9475
Fax: 848-731-9499

Europe/Asia-Pacific
Parc Cezanne 1
380 Avenue Archimède
Parc de la Duranne
13857 Aix-En-Provence Cedex 3
France
Tel: +33(0)-4-4239-3361
Fax: +33(0)-4-4269-7227

Peregrine Semiconductor, Asia Pacific (APAC)
Shanghai, 200040, P.R. China
Tel: +86-21-5836-8276
Fax: +86-21-5836-7652

Peregrine Semiconductor, Korea
#B-2607, Kolon Tripolis, 210
Geumgok-dong, Bundang-gu, Seongnam-si
Gyeonggi-do, 463-943 South Korea
Tel: +82-31-728-3939
Fax: +82-31-728-3940

Peregrine Semiconductor K.K., Japan
601 Yaesu Kyodo Building
2-5-9 Yaesu, Chuo-ku
Tokyo 104-0028 Japan
Tel: +81-3-3527-9841
Fax: +81-3-3527-9848

For a list of representatives in your area, please refer to our Web site at: ***www.psemi.com***

Data Sheet Identification

Advance Information

The product is in a formative or design stage. The data sheet contains design target specifications for product development. Specifications and features may change in any manner without notice.

Preliminary Specification

The data sheet contains preliminary data. Additional data may be added at a later date. Peregrine reserves the right to change specifications at any time without notice in order to supply the best possible product.

Product Specification

The data sheet contains final data. In the event Peregrine decides to change the specifications, Peregrine will notify customers of the intended changes by issuing a CNF (Customer Notification Form).

The information in this data sheet is believed to be reliable. However, Peregrine assumes no liability for the use of this information. Use shall be entirely at the user's own risk.

No patent rights or licenses to any circuits described in this data sheet are implied or granted to any third party.

Peregrine's products are not designed or intended for use in devices or systems intended for surgical implant, or in other applications intended to support or sustain life, or in any application in which the failure of the Peregrine product could create a situation in which personal injury or death might occur. Peregrine assumes no liability for damages, including consequential or incidental damages, arising out of the use of its products in such applications.

The Peregrine name, logo, and UTSi are registered trademarks and UltraCMOS, HaRP, MultiSwitch and DuNE are trademarks of Peregrine Semiconductor Corp.

©2010 Peregrine Semiconductor Corp. All rights reserved.