PASTERNACK®
THE ENGINEER'S RF SOURCE



N Male Connector Clamp/Solder Attachment for PE-C400, PE-B400, PE-B405, LMR-400, LMR-400-DB, LMR-400-UF, 0.400 inch

Configuration

- N Male Connector
- MIL-STD-348
- 50 Ohms
- Straight Body Geometry
- PE-C400, PE-B400, PE-B405, LMR-400, LMR-400-DB, LMR-400-UF, 0.400 inch Interface Type
- Clamp/Solder Attachment

Features

- Gold Plated Brass Contact
- Contact plating according to ASTM-B488

Applications

- General Purpose Test
- Custom Cable Assemblies

Description

Pasternack's PE4133 type N male connector with clamp/solder attachment for PE-C400, PE-B400, PE-B405, LMR-400, LMR-400-DB, LMR-400-UF and 0.400 inch is part of our full line of RF components available for same-day shipping.

Our type N male connector PE4133 datasheet specifications and drawing with dimensions are shown below in this PDF. Pasternack's broad catalog of RF, microwave and millimeter wave connectors allows designers to configure and customize their signal connections however they like. Whether the need is to provide an I/O for a board design, or simply create a custom cable assembly configuration, Pasternack has the right connector for the job. Pasternack can also expertly build your custom cable assemblies for you and ship same-day.

Electrical Specifications

Description	Minimum	Typical	Maximum	Units
Operating Voltage (AC)			1,000	Vrms
Dielectric Withstanding Voltage (AC)			2,500	Vrms

Mechanical Specifications

Size

Length	1.5 in [38.1 mm]
Width/Dia.	0.8 in [20.32 mm]
Weight	0.123 lbs [55.79 g]

Click the following link (or enter part number in "SEARCH" on website) to obtain additional part information including price, inventory and certifications: N Male Connector Clamp/Solder Attachment for PE-C400, PE-B400, PE-B405, LMR-400, LMR-400-DB, LMR-400-UF, 0.400 inch PE4133

Pasternack Enterprises, Inc. • P.O. Box 16759, Irvine, CA 92623
Phone: (866) 727-8376 or (949) 261-1920 • **Fax:** (949) 261-7451
Sales@Pasternack.com • Techsupport@Pasternack.com

ISO 9001 : 2008 Registered

© 2016 Pasternack Enterprises All Rights Reserved

PASTERNACK®
THE ENGINEER'S RF SOURCE



N Male Connector Clamp/Solder Attachment for PE-C400, PE-B400, PE-B405, LMR-400, LMR-400-DB, LMR-400-UF, 0.400 inch

RF Connectors Technical Data Sheet PE4133

Material Specifications

Description	Material	Plating
Contact	Brass	Gold ASTM-B488
Insulation	PTFE	
Body	Brass	Nickel ASTM-B689
Coupling Nut	Brass	Nickel ASTM-B689

Environmental Specifications

Temperature

Operating Range	-65 to +165 deg C

Compliance Certifications (see product page for current document)

Plotted and Other Data

Notes:

N Male Connector Clamp/Solder Attachment for PE-C400, PE-B400, PE-B405, LMR-400, LMR-400-DB, LMR-400-UF, 0.400 inch from Pasternack Enterprises has same day shipment for domestic and International orders. Our RF, microwave and millimeter wave products maintain a 99% availability and are part of the broadest selection in the industry.

Click the following link (or enter part number in "SEARCH" on website) to obtain additional part information including price, inventory and certifications: N Male Connector Clamp/Solder Attachment for PE-C400, PE-B400, PE-B405, LMR-400, LMR-400-DB, LMR-400-UF, 0.400 inch PE4133

URL: https://www.pasternack.com/n-male-standard-pe-b400-pe-b405-pe-c400-connector-pe4133-p.aspx

The information contained in this document is accurate to the best of our knowledge and representative of the part described herein. It may be necessary to make modifications to the part and/or the documentation of the part, in order to implement improvements. Pasternack reserves the right to make such changes as required. Unless otherwise stated, all specifications are nominal. Pasternack does not make any representation or warranty regarding the suitability of the part described herein for any particular purpose, and Pasternack does not assume any liability arising out of the use of any part or documentation.

Pasternack Enterprises, Inc. • P.O. Box 16759, Irvine, CA 92623
Phone: (866) 727-8376 or (949) 261-1920 • **Fax:** (949) 261-7451
Sales@Pasternack.com • Techsupport@Pasternack.com

ISO 9001 : 2008 Registered

© 2016 Pasternack Enterprises All Rights Reserved

© 2016 Pasternack Enterprises All Rights Reserved

PE4133 CAD Drawing

N Male Connector Clamp/Solder Attachment for PE-C400, PE-B400, PE-B405, LMR-400, LMR-400-DB, LMR-400-UF, 0.400 inch

ASSEMBLY PROCEDURES

1. SLIDE CLAMP NUT (1), WASHER (2) & GASKET (3) OVER CABLE. STRIP CABLE AS SHOWN. DO NOT NICK BRAID WHILE CUTTING JACKET. TAPER END OF BRAID TO PERMIT ASSEMBLY OF BRAID CLAMP (4). SLIDE BRAID CLAMP (4) OVER BRAID & SEAT AGAINST JACKET.

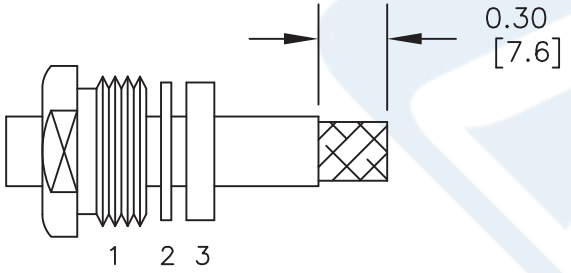

2. FORM BRAID OVER CLAMP NUT (4). TRIM BRAID BACK TO SHOULDER. CUT DIELECTRIC & CENTER CONDUCTOR TO DIMENSION SHOWN. DO NOT NICK CENTER CONDUCTOR. SOLDER CONTACT TO CENTER CONDUCTOR. REMOVE EXCESS SOLDER. DO NOT OVER HEAT DIELECTRIC. INSERT CABLE ASSEMBLY INTO BODY & TIGHTEN.

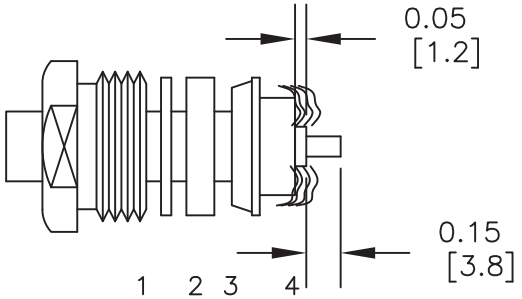

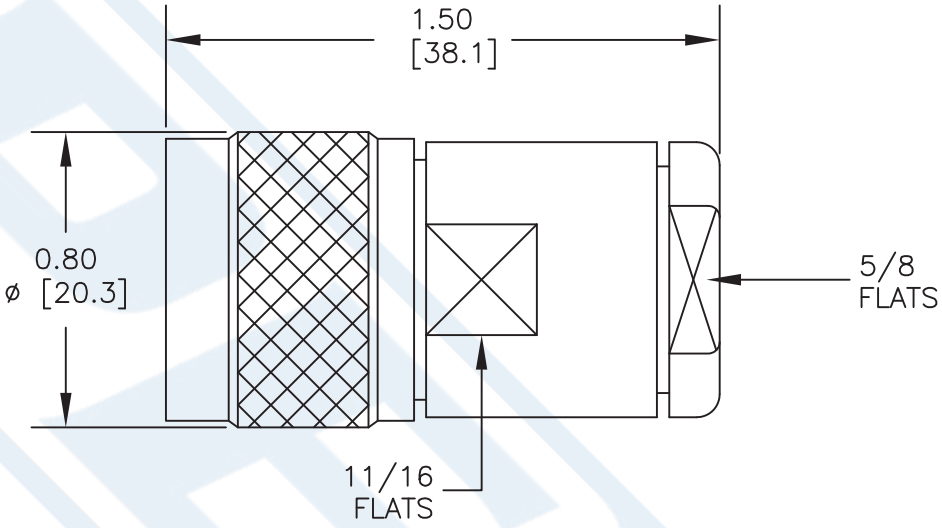

STANDARD TOLERANCES	
.X	±0.2
.XX	±0.1
.XXX	±0.05

*STANDARD TOLERANCES APPLY ONLY TO DIMENSIONS IN INCHES

PASTERNACK® THE ENGINEER'S RF SOURCE
Pasternack Enterprises, Inc.
P.O. Box 16759 | Irvine | CA | 92623
Phone: (949) 261-1920 | **Fax:** (949) 261-7451
Website: www.pasternack.com | **E-Mail:** sales@pasternack.com

DWG TITLE

PE4133

NOTES:
1. UNLESS OTHERWISE SPECIFIED ALL DIMENSIONS ARE NOMINAL.
2. ALL SPECIFICATIONS ARE SUBJECT TO CHANGE WITHOUT NOTICE AT ANY TIME.
3. DIMENSIONS ARE IN INCHES [mm].

CAGE CODE 53919	CAD FILE 090111	SCALE N/A	SIZE A	2231