PASTERNACK®
THE ENGINEER'S RF SOURCE



# SSMC Jack Bulkhead to TNC Male Cable 72 Inch Length Using PE-SR405FLJ Coax

## RF Cable Assemblies Technical Data Sheet PE3C4454-72

### Configuration

- Connector 1: SSMC Jack Bulkhead
- Connector 2: TNC Male
- Cable Type: PE-SR405FLJ

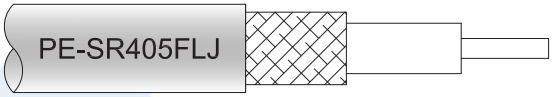


### Features

- SSMC Cable Assembly Max. Operating Frequency of 6 GHz
- Small SSMC cable connection form factor (50% smaller than SMA, radially)
- Reliable threaded coupling
- In stock and ready to ship

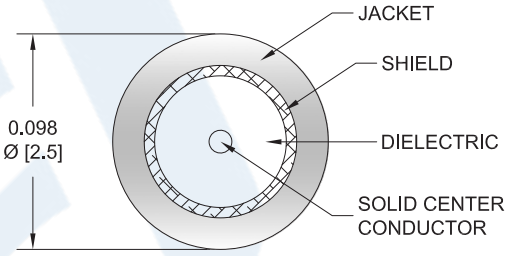


### Applications

- SSMC Cable General Purpose Test
- Data Acquisition Systems
- A/D Conversion Systems
- Ultra Wideband Digital Receivers
- Software defined radio (SDR)

### Description

Pasternack's SSMC cable assemblies are part of our full line of RF components available for same-day shipping. These SSMC cable assemblies are designed to connect SSMC system components and test connections, delivering signal frequencies as high as 12.4 GHz. Our family of SSMC cables can also be used to connect SSMC ports on data acquisition systems, A/D modules or SSMC coax patch panels. If none of our standard options fit your application, you can specify your own custom SSMC cable assembly using Pasternack's online Cable Creator.

Our SSMC cable assembly datasheet specifications and drawing with dimensions are shown below in this PDF. Pasternack's broad catalog of RF, microwave and millimeter wave cable assemblies allow designers to configure and customize their signal connections however they like. Whether the need is to provide SSMC cabling for a data acquisition system, or simply create a custom cable assembly configuration, Pasternack has the right cable assemblies for the job. Pasternack can also expertly build your custom cable assemblies for you and ship same day.

### Electrical Specifications

| Description | Minimum | Typical | Maximum | Units |
|---|---|---|---|---|
| Frequency Range | DC | | 6 | GHz |
| Velocity of Propagation | | 69.5 | | % |
| RF Shielding | 100 | | | dB |
| Group Delay | | 1.43 [4.69] | | ns/ft [ns/m] |
| Capacitance | | 29 [95.14] | | pF/ft [pF/m] |
| DC Resistance Inner Conductor | | 65.7 [215.55] | | Ω/1000ft [Ω/Km] |
| DC Resistance Outer Conductor | | 10.2 [33.46] | | Ω/1000ft [Ω/Km] |

Click the following link (or enter part number in "SEARCH" on website) to obtain additional part information including price, inventory and certifications: SSMC Jack Bulkhead to TNC Male Cable 72 Inch Length Using PE-SR405FLJ Coax PE3C4454-72

Pasternack Enterprises, Inc. • P.O. Box 16759, Irvine, CA 92623
**Phone:** (866) 727-8376 or (949) 261-1920 • **Fax:** (949) 261-7451
Sales@Pasternack.com • Techsupport@Pasternack.com

ISO 9001 : 2008 Registered

© 2017 Pasternack Enterprises All Rights Reserved

PASTERNACK
THE ENGINEER'S RF SOURCE



# SSMC Jack Bulkhead to TNC Male Cable 72 Inch Length Using PE-SR405FLJ Coax

## RF Cable Assemblies Technical Data Sheet PE3C4454-72

### Specifications by Frequency

| Description | F1 | F2 | F3 | F4 | F5 | Units |
|---|---|---|---|---|---|---|
| Frequency | 0.5 | 1 | 2.5 | 6 | | GHz |
| Insertion Loss (Max.) | 1.1 | 1.58 | 2.36 | 3.86 | | dB |

### Mechanical Specifications

**Cable Assembly**

| | |
|---|---|
| Length* | 72 in [182.88 cm] |
| Diameter | 0.591 in [15.01 mm] |

**Cable**

| | |
|---|---|
| Cable Type | PE-SR405FLJ |
| Impedance | 50 Ohms |
| Inner Conductor Type | Solid |
| Inner Conductor Material and Plating | Copper Clad Steel, Silver |
| Dielectric Type | PTFE |
| Number of Shields | 1 |
| Outer Conductor Material and Plating | Tinned Copper Composite Braid |
| Jacket Material | FEP, Black |
| Jacket Diameter | 0.105 in [2.67 mm] |
| One Time Minimum Bend Radius | 0.5 in [12.7 mm] |
| Repeated Minimum Bend Radius | 0.787 in [19.99 mm] |

Click the following link (or enter part number in “SEARCH” on website) to obtain additional part information including price, inventory and certifications: SSMC Jack Bulkhead to TNC Male Cable 72 Inch Length Using PE-SR405FLJ Coax PE3C4454-72

Pasternack Enterprises, Inc. • P.O. Box 16759, Irvine, CA 92623
**Phone:** (866) 727-8376 or (949) 261-1920 • **Fax:** (949) 261-7451
Sales@Pasternack.com • Techsupport@Pasternack.com

ISO 9001 : 2008 Registered

© 2017 Pasternack Enterprises All Rights Reserved



# SSMC Jack Bulkhead to TNC Male Cable 72 Inch Length Using PE-SR405FLJ Coax



**Connectors**

| Description | Connector 1 | Connector 2 |
|---|---|---|
| Type | SSMC Jack Bulkhead | TNC Male |
| Impedance | 50 Ohms | 50 Ohms |
| Mating Cycles | 500 | |
| Contact Material and Plating | Beryllium Copper, Gold | Brass, Gold over Nickel |
| Contact Plating Specification | MIL-G-45204 | |
| Dielectric Type | Teflon | PTFE |
| Outer Conductor Material and Plating | Beryllium Copper, Gold | |
| Outer Conductor Plating Specification | MIL-G-45204 | |
| Body Material and Plating | Beryllium Copper, Gold | Brass, Nickel |
| Body Plating Specification | MIL-G-45204 | |
| Coupling Nut Material and Plating | | Brass, Nickel |
| Torque | 1.75 in-lbs [0.2 Nm] | |

Mechanical Specification Notes:
*All cable assemblies have a length tolerance of 1.5% or ± 3/8", whichever is greater.

**Compliance Certifications** (see product page for current document)

**Plotted and Other Data**

Notes:

Click the following link (or enter part number in "SEARCH" on website) to obtain additional part information including price, inventory and certifications: SSMC Jack Bulkhead to TNC Male Cable 72 Inch Length Using PE-SR405FLJ Coax PE3C4454-72

Pasternack Enterprises, Inc. • P.O. Box 16759, Irvine, CA 92623
**Phone:** (866) 727-8376 or (949) 261-1920 • **Fax:** (949) 261-7451
Sales@Pasternack.com • Techsupport@Pasternack.com

ISO 9001 : 2008 Registered

© 2017 Pasternack Enterprises All Rights Reserved

PASTERNACK
THE ENGINEER'S RF SOURCE



# SSMC Jack Bulkhead to TNC Male Cable 72 Inch Length Using PE-SR405FLJ Coax

## RF Cable Assemblies Technical Data Sheet PE3C4454-72

### How to Order

Part Number Configuration: **PE3C4454 - xx uu**

- uu — Unit of Measure: cm = Centimeters, <blank> = Inches
- xx — Length
- PE3C4454 — Base Number

Example: PE3C4454-12 = 12 inches long cable
PE3C4454-100cm = 100 cm long cable

SSMC Jack Bulkhead to TNC Male Cable 72 Inch Length Using PE-SR405FLJ Coax from Pasternack Enterprises has same day shipment for domestic and International orders. Our RF, microwave and millimeter wave products maintain a 99.4% availability and are part of the broadest selection in the industry.

Click the following link (or enter part number in "SEARCH" on website) to obtain additional part information including price, inventory and certifications: SSMC Jack Bulkhead to TNC Male Cable 72 Inch Length Using PE-SR405FLJ Coax PE3C4454-72

URL: https://www.pasternack.com/ssmc-jack-tnc-male-pe-sr405flj-cable-assembly-pe3c4454-72-p.aspx

The information contained in this document is accurate to the best of our knowledge and representative of the part described herein. It may be necessary to make modifications to the part and/or the documentation of the part, in order to implement improvements. Pasternack reserves the right to make such changes as required. Unless otherwise stated, all specifications are nominal. Pasternack does not make any representation or warranty regarding the suitability of the part described herein for any particular purpose, and Pasternack does not assume any liability arising out of the use of any part or documentation.

Pasternack Enterprises, Inc. • P.O. Box 16759, Irvine, CA 92623
**Phone:** (866) 727-8376 or (949) 261-1920 • **Fax:** (949) 261-7451
Sales@Pasternack.com • Techsupport@Pasternack.com

ISO 9001 : 2008 Registered

© 2017 Pasternack Enterprises All Rights Reserved

© 2017 Pasternack Enterprises All Rights Reserved

# PE3C4454-72 CAD Drawing

SSMC Jack Bulkhead to TNC Male Cable 72 Inch Length Using PE-SR405FLJ Coax

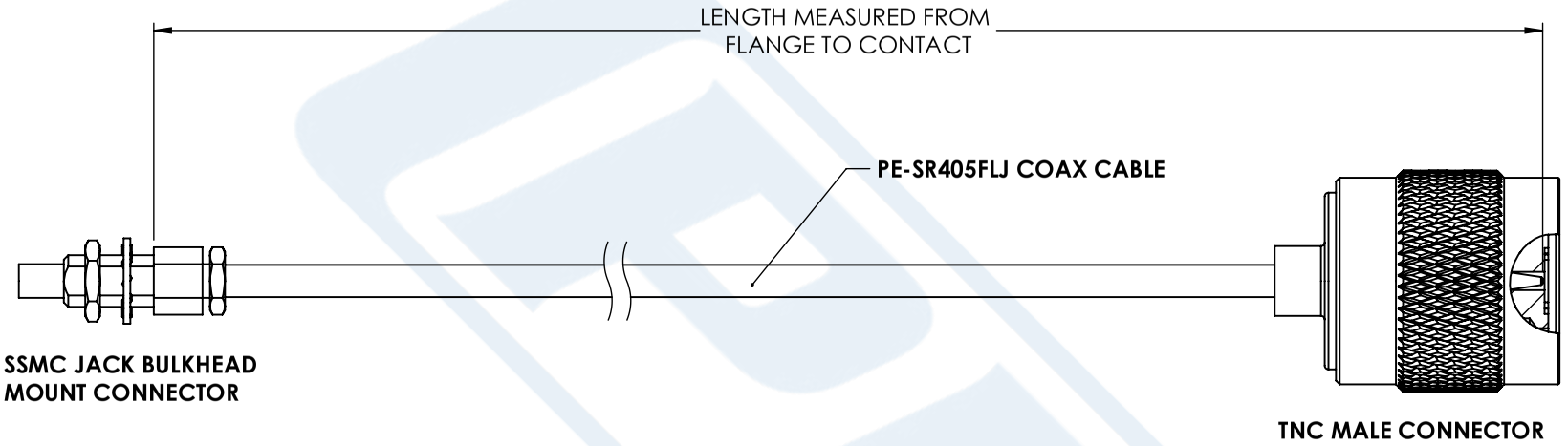


| STANDARD TOLERANCES | |
|---|---|
| .X | ±0.2 |
| .XX | ±0.01 |
| .XXX | ±0.005 |

*STANDARD TOLERANCES APPLY ONLY TO DIMENSIONS IN INCHES

PASTERNACK®
THE ENGINEER'S RF SOURCE
Pasternack Enterprises, Inc.
P.O. Box 16759 | Irvine | CA | 92623
**Phone:** (949) 261-1920 | **Fax:** (949) 261-7451
**Website:** www.pasternack.com | **E-Mail:** sales@pasternack.com

DWG TITLE

PE3C4454

NOTES:
1. UNLESS OTHERWISE SPECIFIED ALL DIMENSIONS ARE NOMINAL.
2. ALL SPECIFICATIONS ARE SUBJECT TO CHANGE WITHOUT NOTICE AT ANY TIME.
3. DIMENSIONS ARE IN INCHES [mm].

| CAGE CODE 53919 | CAD FILE 09/13/17 | SCALE N/A | SIZE A | CN2245 |
|---|---|---|---|---|