PASTERNACK
THE ENGINEER'S RF SOURCE



BNC Male to BNC Female Bulkhead Cable Using RG316 Coax

RF Cable Assemblies Technical Data Sheet PE3C3446

Configuration

- Connector 1: BNC Male
- Connector 2: BNC Female Bulkhead
- Cable Type: RG316

Electrical Specifications

Description	Minimum	Typical	Maximum	Units
Frequency Range	DC		3	GHz
VSWR			1.4:1	
Velocity of Propagation		69		%
Capacitance		29.4 [96.46]		pF/ft [pF/m]
DC Resistance Inner Conductor		8.41 [27.59]		Ω/1000ft [Ω/Km]
Operating Voltage (AC)			335	Vrms
Jacket Spark			2,000	Vrms

Specifications by Frequency

Description	F1	F2	F3	F4	F5	Units
Frequency	0.1	0.25	0.5	1	3	GHz
Insertion Loss (Max.)	1.11	1.15	1.2	1.3	1.55	dB/ft
	3.64	3.77	3.94	4.27	5.09	dB/m
Insertion Loss (Typ.)	0.31	0.36	0.438	0.58	0.78	dB/ft
	1.02	1.18	1.44	1.9	2.56	dB/m
VSWR (Max.)	1.4:1	1.4:1	1.4:1	1.4:1		
Return Loss (Max.)	15.56	15.563	15.563	15.563		dB

Mechanical Specifications

Cable Assembly

Diameter	0.689 in [17.5 mm]

Click the following link (or enter part number in "SEARCH" on website) to obtain additional part information including price, inventory and certifications: BNC Male to BNC Female Bulkhead Cable Using RG316 Coax PE3C3446

Pasternack Enterprises, Inc. • P.O. Box 16759, Irvine, CA 92623
Phone: (866) 727-8376 or (949) 261-1920 • **Fax:** (949) 261-7451
Sales@Pasternack.com • Techsupport@Pasternack.com

ISO 9001 : 2008 Registered

© 2017 Pasternack Enterprises All Rights Reserved

PASTERNACK
THE ENGINEER'S RF SOURCE



BNC Male to BNC Female Bulkhead Cable Using RG316 Coax

RF Cable Assemblies Technical Data Sheet PE3C3446

Cable

Cable Type	RG316
Impedance	50 Ohms
Inner Conductor Type	Stranded
Inner Conductor Material and Plating	Copper Clad Steel, Silver
Dielectric Type	PTFE
Number of Shields	1
Shield Layer 1	Silver Plated Copper Braid
Jacket Material	FEP, Tan
Jacket Diameter	0.102 in [2.59 mm]

Connectors

Description	Connector 1	Connector 2
Type	BNC Male	BNC Female Bulkhead
Specification	MIL-STD-348A	
Impedance	50 Ohms	50 Ohms
Contact Material and Plating	Brass, Gold	Brass, Gold
Contact Plating Specification	50µ in. minimum	30 µin minimum
Dielectric Type	Teflon	PTFE
Body Material and Plating	Brass, Nickel	Brass, Nickel
Body Plating Specification	100µ in. minimum	100 µin minimum
Coupling Nut Material and Plating	Brass, Nickel	
Coupling Nut Plating Specification	100µ in. minimum	

Mechanical Specification Notes:
*All cable assemblies have a length tolerance of 1.5% or ± 3/8", whichever is greater.

Environmental Specifications

Temperature

Operating Range	-55 to +165 deg C

Compliance Certifications (see product page for current document)

Plotted and Other Data

Notes:
- Values at 25°C, sea level.

Click the following link (or enter part number in "SEARCH" on website) to obtain additional part information including price, inventory and certifications: BNC Male to BNC Female Bulkhead Cable Using RG316 Coax PE3C3446

Pasternack Enterprises, Inc. • P.O. Box 16759, Irvine, CA 92623
Phone: (866) 727-8376 or (949) 261-1920 • **Fax:** (949) 261-7451
Sales@Pasternack.com • Techsupport@Pasternack.com

ISO 9001 : 2008 Registered

© 2017 Pasternack Enterprises All Rights Reserved

PASTERNACK®
THE ENGINEER'S RF SOURCE



BNC Male to BNC Female Bulkhead Cable Using RG316 Coax

RF Cable Assemblies Technical Data Sheet PE3C3446

How to Order

Part Number Configuration: **PE3C3446 - xx uu**

- uu — Unit of Measure:
  - cm = Centimeters
  - <blank> = Inches
- xx — Length
- PE3C3446 — Base Number

Example: PE3C3446-12 = 12 inches long cable
PE3C3446-100cm = 100 cm long cable

BNC Male to BNC Female Bulkhead Cable Using RG316 Coax from Pasternack Enterprises has same day shipment for domestic and International orders. Our RF, microwave and millimeter wave products maintain a 99.4% availability and are part of the broadest selection in the industry.

Click the following link (or enter part number in "SEARCH" on website) to obtain additional part information including price, inventory and certifications: BNC Male to BNC Female Bulkhead Cable Using RG316 Coax PE3C3446

URL: https://www.pasternack.com/bnc-male-bnc-female-rg316u-cable-assembly-pe3c3446-p.aspx

The information contained in this document is accurate to the best of our knowledge and representative of the part described herein. It may be necessary to make modifications to the part and/or the documentation of the part, in order to implement improvements. Pasternack reserves the right to make such changes as required. Unless otherwise stated, all specifications are nominal. Pasternack does not make any representation or warranty regarding the suitability of the part described herein for any particular purpose, and Pasternack does not assume any liability arising out of the use of any part or documentation.

Pasternack Enterprises, Inc. • P.O. Box 16759, Irvine, CA 92623
Phone: (866) 727-8376 or (949) 261-1920 • **Fax:** (949) 261-7451
Sales@Pasternack.com • Techsupport@Pasternack.com

ISO 9001 : 2008 Registered

© 2017 Pasternack Enterprises All Rights Reserved

PE3C3446 CAD Drawing

BNC Male to BNC Female Bulkhead Cable Using RG316 Coax

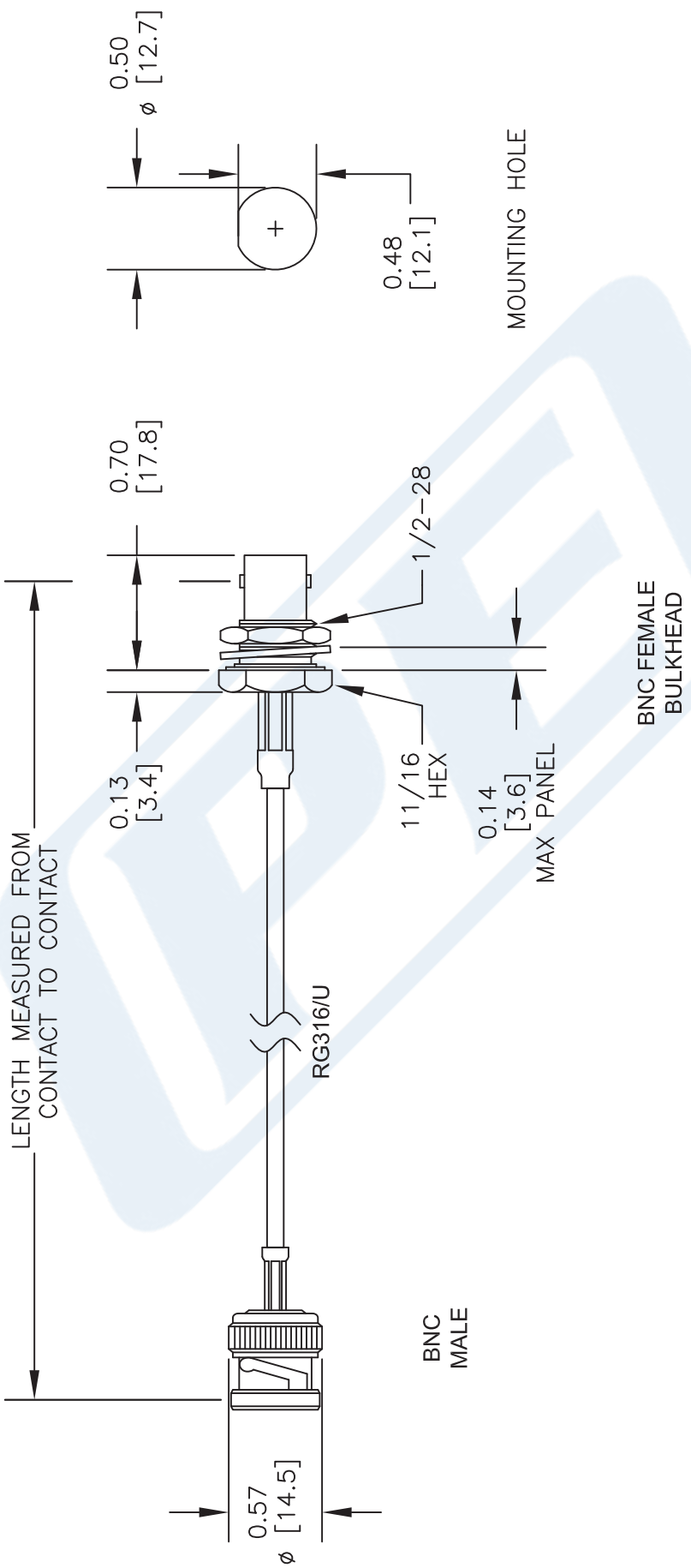

NOTES:
1. UNLESS OTHERWISE SPECIFIED ALL DIMENSIONS ARE NOMINAL.
2. ALL SPECIFICATIONS ARE SUBJECT TO CHANGE WITHOUT NOTICE AT ANY TIME.
3. DIMENSIONS ARE IN INCHES [mm].
4. LENGTH TOLERANCE IS ± 1.5% OR 3/8", WHICHEVER IS GREATER.

CAD FILE	101816	SCALE N/A	SIZE A	2233

DWG TITLE: **PE3C3446**

FSCM NO. 53919

PASTERNACK® THE ENGINEER'S RF SOURCE
Pasternack Enterprises, Inc.
P.O. Box 16759 | Irvine | CA | 92623
Phone: (949) 261-1920 | **Fax:** (949) 261-7451
Website: www.pasternack.com | **E-Mail:** sales@pasternack.com

© 2017 Pasternack Enterprises All Rights Reserved